To our customers,

Old Company Name in Catalogs and Other Documents

On April 1st, 2010, NEC Electronics Corporation merged with Renesas Technology Corporation, and Renesas Electronics Corporation took over all the business of both companies. Therefore, although the old company name remains in this document, it is a valid Renesas Electronics document. We appreciate your understanding.

Renesas Electronics website: http://www.renesas.com

April 1st, 2010
Renesas Electronics Corporation

Issued by: Renesas Electronics Corporation (http://www.renesas.com)

Send any inquiries to http://www.renesas.com/inquiry.

RENESAS

Notice

1. All information included in this document is current as of the date this document is issued. Such information, however, is subject to change without any prior notice. Before purchasing or using any Renesas Electronics products listed herein, please confirm the latest product information with a Renesas Electronics sales office. Also, please pay regular and careful attention to additional and different information to be disclosed by Renesas Electronics such as that disclosed through our website.
2. Renesas Electronics does not assume any liability for infringement of patents, copyrights, or other intellectual property rights of third parties by or arising from the use of Renesas Electronics products or technical information described in this document. No license, express, implied or otherwise, is granted hereby under any patents, copyrights or other intellectual property rights of Renesas Electronics or others.
3. You should not alter, modify, copy, or otherwise misappropriate any Renesas Electronics product, whether in whole or in part.
4. Descriptions of circuits, software and other related information in this document are provided only to illustrate the operation of semiconductor products and application examples. You are fully responsible for the incorporation of these circuits, software, and information in the design of your equipment. Renesas Electronics assumes no responsibility for any losses incurred by you or third parties arising from the use of these circuits, software, or information.
5. When exporting the products or technology described in this document, you should comply with the applicable export control laws and regulations and follow the procedures required by such laws and regulations. You should not use Renesas Electronics products or the technology described in this document for any purpose relating to military applications or use by the military, including but not limited to the development of weapons of mass destruction. Renesas Electronics products and technology may not be used for or incorporated into any products or systems whose manufacture, use, or sale is prohibited under any applicable domestic or foreign laws or regulations.
6. Renesas Electronics has used reasonable care in preparing the information included in this document, but Renesas Electronics does not warrant that such information is error free. Renesas Electronics assumes no liability whatsoever for any damages incurred by you resulting from errors in or omissions from the information included herein.
7. Renesas Electronics products are classified according to the following three quality grades: "Standard", "High Quality", and "Specific". The recommended applications for each Renesas Electronics product depends on the product's quality grade, as indicated below. You must check the quality grade of each Renesas Electronics product before using it in a particular application. You may not use any Renesas Electronics product for any application categorized as "Specific" without the prior written consent of Renesas Electronics. Further, you may not use any Renesas Electronics product for any application for which it is not intended without the prior written consent of Renesas Electronics. Renesas Electronics shall not be in any way liable for any damages or losses incurred by you or third parties arising from the use of any Renesas Electronics product for an application categorized as "Specific" or for which the product is not intended where you have failed to obtain the prior written consent of Renesas Electronics. The quality grade of each Renesas Electronics product is "Standard" unless otherwise expressly specified in a Renesas Electronics data sheets or data books, etc.

   "Standard": Computers; office equipment; communications equipment; test and measurement equipment; audio and visual equipment; home electronic appliances; machine tools; personal electronic equipment; and industrial robots.

   "High Quality": Transportation equipment (automobiles, trains, ships, etc.); traffic control systems; anti-disaster systems; anti-crime systems; safety equipment; and medical equipment not specifically designed for life support.

   "Specific": Aircraft; aerospace equipment; submersible repeaters; nuclear reactor control systems; medical equipment or systems for life support (e.g. artificial life support devices or systems), surgical implantations, or healthcare intervention (e.g. excision, etc.), and any other applications or purposes that pose a direct threat to human life.
8. You should use the Renesas Electronics products described in this document within the range specified by Renesas Electronics, especially with respect to the maximum rating, operating supply voltage range, movement power voltage range, heat radiation characteristics, installation and other product characteristics. Renesas Electronics shall have no liability for malfunctions or damages arising out of the use of Renesas Electronics products beyond such specified ranges.
9. Although Renesas Electronics endeavors to improve the quality and reliability of its products, semiconductor products have specific characteristics such as the occurrence of failure at a certain rate and malfunctions under certain use conditions. Further, Renesas Electronics products are not subject to radiation resistance design. Please be sure to implement safety measures to guard them against the possibility of physical injury, and injury or damage caused by fire in the event of the failure of a Renesas Electronics product, such as safety design for hardware and software including but not limited to redundancy, fire control and malfunction prevention, appropriate treatment for aging degradation or any other appropriate measures. Because the evaluation of microcomputer software alone is very difficult, please evaluate the safety of the final products or system manufactured by you.
10. Please contact a Renesas Electronics sales office for details as to environmental matters such as the environmental compatibility of each Renesas Electronics product. Please use Renesas Electronics products in compliance with all applicable laws and regulations that regulate the inclusion or use of controlled substances, including without limitation, the EU RoHS Directive. Renesas Electronics assumes no liability for damages or losses occurring as a result of your noncompliance with applicable laws and regulations.
11. This document may not be reproduced or duplicated, in any form, in whole or in part, without prior written consent of Renesas Electronics.
12. Please contact a Renesas Electronics sales office if you have any questions regarding the information contained in this document or Renesas Electronics products, or if you have any other inquiries.

(Note 1) "Renesas Electronics" as used in this document means Renesas Electronics Corporation and also includes its majority-owned subsidiaries.

(Note 2) "Renesas Electronics product(s)" means any product developed or manufactured by or for Renesas Electronics.

M37150M6/M8/MA/MC/MF-XXXFP, M37150EFFP

SNGLE-CHIP 8-BIT CMOS MICROCOMPUTER

REJ03B0128-0100Z
Rev.1.00
Nov 01, 2002

1. DESCRIPTION

The M37150M6/M8/MA/MC/MF-XXXFP and M37150EFFP are single-chip microcomputers designed with CMOS silicon gate technology. They have an OSD, data slicer, and I^2C-BUS interface, making them perfect for TV channel selection systems with a closed caption decoder. The M37150EFFP has a built-in PROM that can be written electrically.

2. FEATURES

- Number of basic instructions 71
- Memory size
  - ROM ..... 24K bytes (M37150M6-XXXFP)
    32K bytes (M37150M8-XXXFP)
    40K bytes (M37150MA-XXXFP)
    48K bytes (M37150MC-XXXFP)
    60K bytes (M37150MF-XXXFP, M37150EFFP)
  - RAM ..... 1024 bytes (M37150M6-XXXFP)
    1152 bytes (M37150M8-XXXFP)
    1472 bytes (M37150MA-XXXFP, M37150MC-XXXFP)
    2048 bytes (M37150MF-XXXFP, M37150EFFP)
  - (*ROM correction memory included)
- Minimum instruction execution time
  ..... 0.447 µs (at 3.58 MHz oscillation frequency)
  ..... 0.451 µs (at 4.43 MHz oscillation frequency)
- Power source voltage ..... 5 V ± 10 %
- Subroutine nesting ..... 128 levels (Max.)
- Interrupts ..... 17 types, 16 vectors
- 8-bit timers 6
- Programmable I/O ports (Ports P0, P1, P2, $P3_0$, $P3_1$) 25
- Serial I/O ..... 8-bit × 1 channel
- Multi-master I^2C-BUS interface ..... 1 (3 systems)
- A-D comparator (7-bit resolution) ..... 8 channels
- PWM output circuit ..... 8-bit × 5
- Power dissipation
  In high-speed mode ..... 165 mW
  (at V_{CC} = 5.5V, FSCIN = 3.58 MHz, OSD on, and Data slicer on)
  In low-speed mode ..... 0.33 mW
  (at V_{CC} = 5.5V, 32 kHz oscillation frequency)
- Closed caption data slicer
- ROM correction function ..... 2 vectors
- OSD function
  Display characters ..... 32 characters × 2 lines
  (3 lines or more can be displayed by software)
  Kinds of characters ..... 254 kinds
  (coloring unit) (per charactor unit)
  Character display area ..... CC mode: 16 × 26 dots
  OSD mode: 16 × 20 dots
  Kinds of character sizes ..... CC mode: 1 kind
  OSD mode: 8 kinds
  Kinds of character colors ..... 8 colors (R, G, B)
  Coloring unit ..... character, character background, raster
  Display position
  Horizontal: 128 levels Vertical: 512 levels
  Attribute .....
  CC mode: smooth italic, underline, flash, automatic solid space
  OSD mode: border
  Smoth roll-up
  Window function

3. APPLICATION

TV with closed caption decoder

TABLE OF CONTENTS

1. DESCRIPTION 1
2. FEATURES 1
3. APPLICATION 1
4. PIN CONFIGURATION 3
5. FUNCTIONAL BLOCK DIAGRAM 4
6. PERFORMANCE OVERVIEW 5
7. PIN DESCRIPTION 7
8. FUNCTIONAL DESCRIPTION 12
    8.1 CENTRAL PROCESSING UNIT (CPU) 12
    8.2 MEMORY 13
    8.3 INTERRUPTS 18
    8.4 TIMERS 23
    8.5 SERIAL I/O 27
    8.6 MULTI-MASTER I^{2}C-BUS INTERFACE 30
    8.7 PWM OUTPUT FUNCTION 43
    8.8 A-D COMPARATOR 47
    8.9 ROM CORRECTION FUNCTION 49
    8.10 DATA SLICER 50
    8.11 OSD FUNCTIONS 61
        8.11.1 Display Position 66
        8.11.2 Dot Size 70
        8.11.3 Clock for OSD 71
        8.11.4 Field Determination Display 72
        8.11.5 Memory for OSD 74
        8.11.6 Character color 78
        8.11.7 Character background color 78
        8.11.8 OUT signals 79
        8.11.9 Attribute 80
        8.11.10 Multiline Display 85
        8.11.11 Automatic Solid Space Function 86
        8.11.12 Scan Mode 87
        8.11.13 Window Function 87
        8.11.14 OSD Output Pin Control 89
        8.11.15 Raster Coloring Function 90
    8.12 SOFTWARE RUNAWAY DETECT FUNCTION 92
    8.13 RESET CIRCUIT 93
    8.14 CLOCK GENERATING CIRCUIT 94
    8.15 AUTO-CLEAR CIRCUIT 100
    8.16 ADDRESSING MODE 100
    8.17 MACHINE INSTRUCTIONS 100
9. TECHNICAL NOTES 100
10. ABSOLUTE MAXIMUM RATINGS 101
11. RECOMMENDED OPERATING CONDITIONS 101
12. ELECTRIC CHARACTERISTICS 102
13. A-D CONVERTER CHARACTERISTICS 104
14. MULTI-MASTER I^{2}C-BUS BUS LINE CHARACTERISTICS 104
15. PROM PROGRAMMING METHOD 105
16. DATA REQUIRED FOR MASK ORDERS 106
17. ONE TIME PROM VERSION M37150EFFP MARKING 107
18. APPENDIX 108
19. PACKAGE OUTLINE 139

4. PIN CONFIGURATION

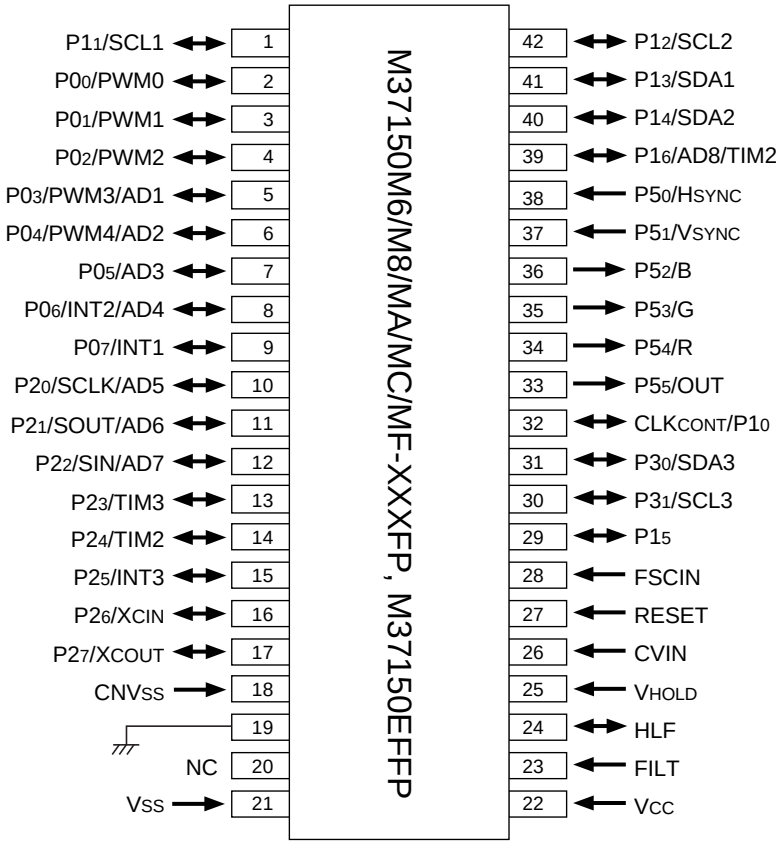

Outline 42P2R

* Open 20-pin.

Fig. 4.1 Pin Configuration (Top View)

5. FUNCTIONAL BLOCK DIAGRAM

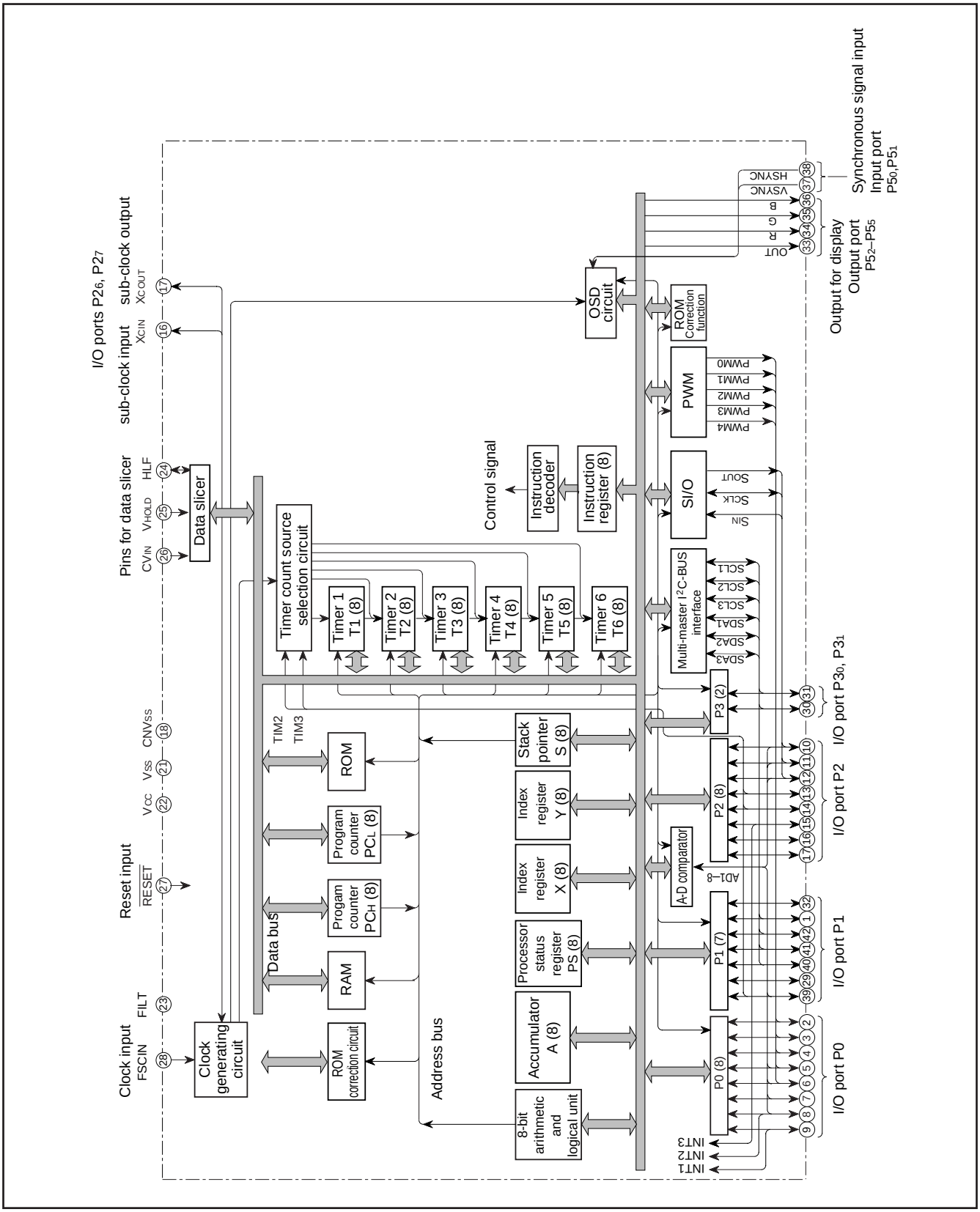

Fig. 5.1 Functional Block Diagram of M37150

6. PERFORMANCE OVERVIEW

Table 6.1 Performance Overview

Parameter				Functions
Number of basic instructions				71
Instruction execution time				0.447 ms (the minimum instruction execution time, at 3.58 MHz oscillation frequency, f(X_{IN}) = 8.95 MHz) 0.451 ms (the minimum instruction execution time, at 4.43 MHz oscillation frequency, f(X_{IN}) = 8.86 MHz)
Clock frequency				8.95 MHz (maximum)
Memory size	ROM	M37150M6-XXXFP		24K bytes
		M37150M8-XXXFP		32K bytes
		M37150MA-XXXFP		40K bytes
		M37150MC-XXXFP		48K bytes
		M37150MF-XXXFP		60K bytes
	RAM	M37150M6-XXXFP		1024 bytes (ROM correction memory included)
		M37150M8-XXXFP		1152 bytes (ROM correction memory included)
		M37150MA-XXXFP, M37150MC-XXXFP		1472 bytes (ROM correction memory included)
		M37150MF-XXXFP, M37150EFFP		2048 bytes (ROM correction memory included)
Input/Output ports	P0		I/O	8-bit × 1 (N-channel open-drain output structure, can be used as PWM output pins, INT input pins, A-D input pin)
	$P1_0$–$P1_6$		I/O	7-bit × 1 (CMOS input/output structure, however, N-channel open-drain output structure, when $P1_1$–$P1_4$ are used as multi-master I^2C-BUS interface, can be used as A-D input pins, timer external clock input pins, multi-master I^2C-BUS interface)
	$P2_0$–$P2_7$		I/O	8-bit × 1 (P2 is CMOS input/output structure, however, N-channel open-drain output structure when $P2_0$ and 2_1 are used as serial output, can be used as serial input/output pins, timer external clock input pins, A-D input pins, INT input pin, sub-clock input/output pins)
	$P3_0$, $P3_1$		I/O	2-bit × 1 (CMOS input/output structure, however, N-channel open-drain output structure, when used as multi-master I^2C-BUS interface, can be used as multi-master I^2C-BUS interface.)
	$P5_0$, $P5_1$		Input	2-bit × 1(can be used as OSD input pins)
	$P5_2$–$P5_5$		Output	4-bit × 1(CMOS output structures, can be used as OSD output pins)
Serial I/O				8-bit × 1
Multi-master I^2C-BUS interface				One (Three lines)
A-D comparator				8 channels (7-bit resolution)
PWM output circuit				8-bit × 5
Timers				8-bit × 6
ROM correction function				2 vectors
Subroutine nesting				128 levels (maximum)
Interrupt				<17 types> INT external interrupt × 3, Internal timer interrupt × 6, Serial I/O interrupt × 1, OSD interrupt × 1, Multi-master I^2C-BUS interface interrupt × 1, Data slicer interrupt × 1, f(X_{IN})/4096 interrupt × 1, V_{SYNC} interrupt × 1, BRK instruction interrupt × 1, reset × 1
Clock generating circuit				2 built-in circuits (externally connected to $X_{CIN/OUT}$ is a ceramic resonator or a quartz-crystal oscillator)
Data slicer				Built-in

Table 6.2 Performance Overview (Continued)

Parameter				Functions
OSD function		Number of display characters		32 characters × 2 lines
		Dot structure		CC mode: 16 × 26 dots (character display area : 16 × 20 dots) OSD mode: 16 × 20 dots
		Kinds of characters		254 kinds
		Kinds of character sizes 1 screen : 8		CC mode: 1 kinds OSD mode: 8 kinds
		Character font coloring		1 screen: 8 kinds (per character unit)
		Display position		Horizontal: 128 levels, Vertical: 512 levels
Power source voltage				5V ± 10%
Power dissipation	In high-speed mode	OSD ON	Data slicer ON	165 mW typ. (at oscillation frequency f(X_{IN}) = 8.95 MHz, f_{OSC} = 26.85 MHz)
		OSD OFF	Data slicer OFF	82.5 mW typ. (at oscillation frequency f(X_{IN}) = 8.95 MHz)
	In low-speed mode	OSD OFF	Data slicer OFF	0.33 mW typ. (at oscillation frequency f(X_{CIN}) = 32 kHz)
	In stop mode			0.055 mW (maximum)
Operating temperature range				–10 °C to 70 °C
Device structure				CMOS silicon gate process
Package				42-pin plastic molded SSOP

7. PIN DESCRIPTION

Table 7.1 PIN DESCRIPTION

Pin	Name	Input/ Output	Functions
V_{CC}, V_{SS}	Power source		Power source: Apply voltage of 5 V + 10 % (typical) to V_{CC}, and 0 V to V_{SS}.
CNV_{SS}	CNV_{SS}		This is connected to V_{SS}.
$\overline{RESET}$	Reset input	Input	To enter the reset state, the reset input pin must be kept at a LOW for 2 ms or more (under normal V_{CC} conditions). If more time is needed for the quartz-crystal oscillator to stabilize, this LOW condition should be maintained for the required time.
FSCIN	Clock input	Input	This is the input pin for the main clock generating circuit.
$P0_0$/PWM0–$P0_2$/PWM2, $P0_3$/PWM3/AD1, $P0_4$/PWM4/AD2, $P0_5$/AD3, $P0_6$/INT2/AD4, $P0_7$/INT1	I/O port P0	I/O	Port P0 is an 8-bit I/O port with a direction register allowing each I/O bit to be individually programmed as input or output. At reset, this port is set to input mode. The output structure is N-channel open-drain output (See note.)
	PWM output	Output	Output Pins $P0_0$ to $P0_4$ are also used as PWM output pins PWM0 to PWM4, respectively. The output structure is N-channel open-drain output.
	External interrupt	Input	Pins $P0_6$ and $P0_7$ are also used as INT external interrupt input pins INT2 and INT1 respec tively.
	Analog input	Input	Pins $P0_3$, $P0_4$, $P0_5$ and $P0_6$ are also used as analog input pins AD1, AD2, AD3 and AD4, respectively.
$P1_0$/CLK_{CONT}, $P1_1$/SCL1, $P1_2$/SCL2, $P1_3$/SDA1, $P1_4$/SDA2, $P1_5$, $P1_6$/AD8/TIM2	I/O port P1	I/O	I/O Port P1 is a 7-bit I/O port and has basically the same functions as port P0. The output structure is CMOS output (See note.)
	Multi-master I^2C-BUS interface	I/O	Pins $P1_1$–$P1_4$ are used as SCL1, SCL2, SDA1 and SDA2 respectively, when multi-master I^2C-BUS interface is used. The output structure is N-channel open-drain output.
	Clock control	Output	$P1_0$ pin is also used as Clock control output CLK CONT. The output structure is CMOS output.
	External clock input for timer	Input	$P1_6$ pin is also used as timer external clock input pin TIM2.
	Analog input	Input	$P1_6$ pin is also used as analog input pin AD8.
$P2_0$/S_{CLK}/AD5, $P2_1$/S_{OUT}/AD6, $P2_2$/S_{IN}/AD7, $P2_3$/TIM3, $P2_4$/TIM2, $P2_5$/INT3, $P2_6$/X_{CIN}, P27/X_{COUT}	I/O port P2	I/O	Port P2 is an 8-bit I/O port and has basically the same functions as port P0. The output structure is CMOS output. (See note)
	Serial I/O synchronous clock input/output port	I/O	$P2_0$ pin is also used as serial I/O synchronous clock input/output pin S_{CLK}. The output structure is N-channel open-drain output.
	Serial I/O data output	Output	$P2_1$ pin is also used as serial I/O data output pin S_{OUT}. The output structure is open-drain output.
	Serial I/O data input	Input	$P2_2$ pin is also used as serial I/O data input pin S_{IN}.
	External clock input for timer	Input	Pins $P2_3$ and $P2_4$ are also used as timer external clock input pins TIM3 and TIM2 respectively.
	Analog input	Input	Pins $P2_0$–$P2_2$ are also used as analog input pins AD5, AD6 and AD7 respectively.
	Sub-clock input	Input	$P2_6$ pin is also used as sub-clock input pin X_{CIN}.
	Sub-clock output	Output	$P2_7$ pin is also used as sub-clock output pin X_{COUT}. The output structure is CMOS output.
	External interrupt input	Input	$P2_5$ pin is also used as INT external interrupt input pin INT3.
$P3_0$/SDA3 $P3_1$/SCL3	I/O port P3	I/O	Port $P3_0$,$P3_1$ is an 2-bit I/O port and has basically the same functions as port P0. The output structure is CMOS output (See note.)
	Multi-master I^2C-BUS Interface	I/O	Pins $P3_0$,$P3_1$ are used as SDA3,SCL3 respectively, when multi-master I^2C-BUS interface is used. The output structure is N-channel open-drain output.

Table 7.2 PIN DESCRIPTION (continued)

Pin	Name	Input/ Output	Functions
$P5_0$/H_{SYNC}	Input P5	Input	Port P5 is a 2-bit input port.
$P5_1$/V_{SYNC}	Horizonta synchronous signal	Input	The $P5_0$ pin is also used as a horizontal synchronous signal input H_{SYNC} for OSD.
	Vertical synchronous signal	Input	The $P5_1$ pin is also used as a vertical synchronous signal input V_{SYNC} for OSD.
$P5_2$/B, $P5_3$/G, $P5_4$/R, $P5_5$/OUT	Output P5	output	Pins $P5_2$–$P5_5$ are a 4-bit output port. The output structure is CMOS output.
	OSD output	output	Pins $P5_2$–$P5_5$ are also used as OSD output pins R, G, B and OUT respectively. The output structure is CMOS output.
CV_{IN}	I/O for data slicer	Input	Input the composite video signal through a capacitor.
V_{HOLD}		Input	Connect a capacitor between V_{HOLD} and Vss.
HLF		I/O	Connect a filter, consisting of a capacitor and a resistor, between HLF and Vss.
FILT	Clock oscillation filter	Input	Connect a capacitor between FILT and Vss.

Notes : Port Pi (i = 0 to 3) has a port Pi direction register that can be used to program each bit for input (“0”) or an output (“1”). The pins programmed as “1” in the direction register are output pins. When pins are programmed as “0,” they are input pins. When pins are programmed as output pins, the output data is written into the port latch and then output. When data is read from the output pins, the data of the port latch, not the output pin level, is read. This allows a previously output value to be read correctly even if the output LOW voltage has risen due to, for example, a directly-driven light emitting diode. The input pins are in the floating state, so the values of the pins can be read. When data is written to the input pin, it is written only into the port latch, while the pin remains in the floating state.

❋ LED drive ports 4 ($P2_4$– $P2_7$)

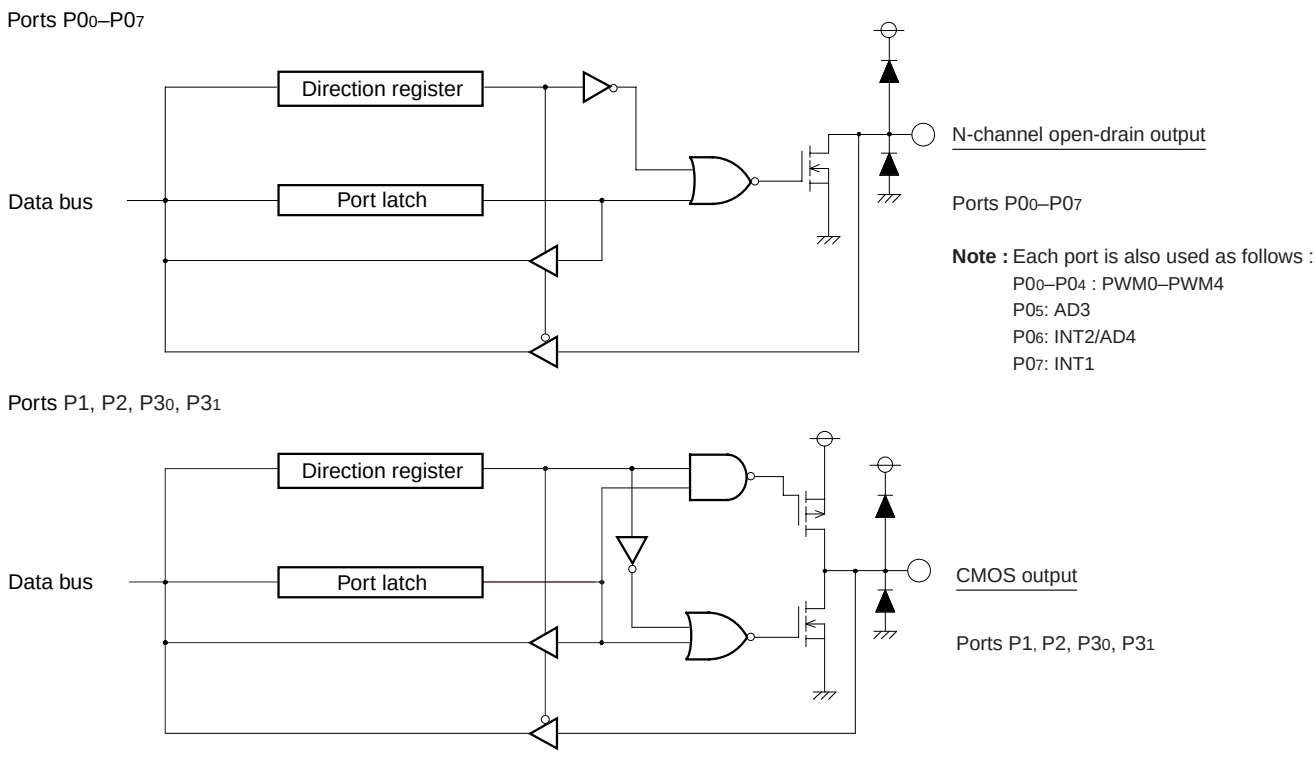

Notes 1 : Each port is also used as follows :

P10 : CLKCONT	P20 : SCLK/AD5	P27 : XCOUT
P11 : SCL1	P21 : SOUT/AD6	P30 : SDA3
P12 : SCL2	P22 : SIN/AD7	P31 : SCL3
P13 : SDA1	P23 : TIM3	
P14 : SDA2	P24 : TIM2	
P16 : AD8/TIM2	P25 : INT3	
	P26 : XCIN	

2: The output structure of ports P11–P14, P30–P31 is N-channel open-drain output when using as multi-master I^2C-BUS interface (it is the same with P00–P07).

3: The output structure of ports P20 and P21 is N-channel open-drain output when using as serial output (it is the same as P00–P07).

Fig. 7.1 I/O Pin Block Diagram (1)

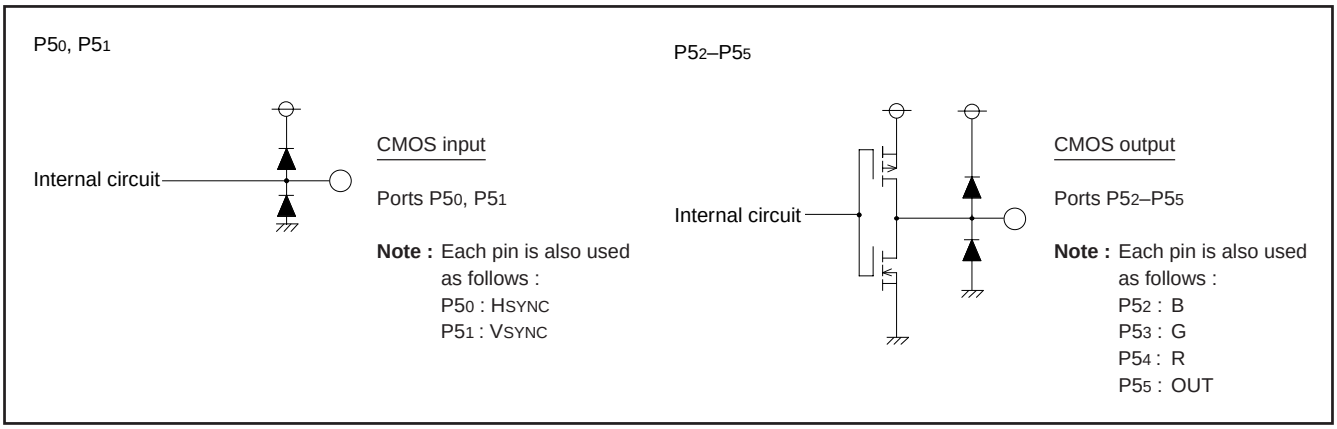

Fig. 7.2 I/O Pin Block Diagram (2)

FSCIN Pin

The FSCIN pin is a reference clock input pin. The main clock and OSD clock are generated based on the reference clock from the FSCIN pin. The sub clock can also be generated directly from the 32 kHz oscillator circuit and FSCIN pin.

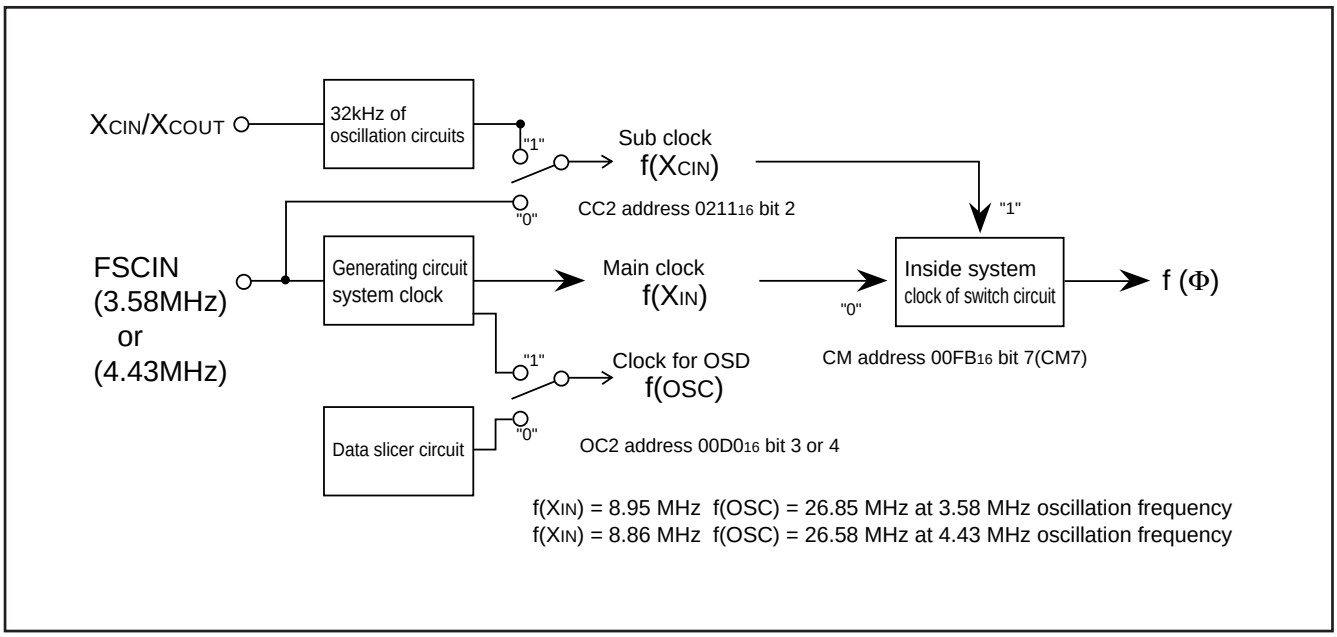

Fig. 7.2 clock generating circuit

8. FUNCTIONAL DESCRIPTION
8.1 CENTRAL PROCESSING UNIT (CPU)

This microcomputer uses the standard 740 Family instruction set. Refer to the table of 740 Family addressing modes and machine instructions or the SERIES 740 <Software> User's Manual for details on the instruction set.

Availability of 740 Family instructions is as follows:

The FST and SLW instructions cannot be used.

The MUL, DIV, WIT and STP instructions can be used.

8.1.1 CPU Mode Register

The CPU Mode Register includes a stack page selection bit and internal system clock selection bit. The CPU Mode Register is allocated to address 00FB16.

CPU Mode Register

b7	b6	b5	b4	b3	b2	b1	b0
			1	1		0	0

CPU mode register (CM) [Address 00FB16]

B	Name	Functions	After reset	R	W
0, 1	Processor mode bits (CM0, CM1)	b1 b0 0 0: Single-chip mode 0 1: } Not available 1 0: } Not available 1 1: } Not available	0	R	W
2	Stack page selection bit (CM2) (See note1)	0: 0 page 1: 1 page	1	R	W
3, 4	Fix these bits to "1."		1	R	W
5	XCOUT drivability selection bit (CM5)	0: LOW drive 1: HIGH drive	1	R	W
6	Main Clock (XIN) stop bit (CM6)	0: Oscillating 1: Stopped	0	R	W
7	Internal system clock selection bit (CM7) (See note2)	0: XIN selected (high-speed mode) 1: XCIN–XCOUT selected or FSCIN input selected (low-speed mode)	0	R	W

Note 1: This bit is set to "1" after the reset release.
2: XCIN-XCOUT and FSCIN are switched over using Clock Control Register 2 (address 0211 16) bit 2.

Fig. 8.1.1 CPU Mode Register

8.2 MEMORY

8.2.1 Special Function Register (SFR) Area

The Special Function Register (SFR) area in the zero page includes control registers such as I/O ports and timers.

8.2.2 RAM

RAM is used for data storage and for stack area of subroutine calls and interrupts.

8.2.3 ROM

ROM is used for storing user programs as well as the interrupt vector area.

8.2.4 OSD RAM

RAM used for specifying the character codes and colors for display.

8.2.5 OSD ROM

ROM used for storing character data for display.

8.2.6 Interrupt Vector Area

The interrupt vector area contains reset and interrupt vectors.

8.2.7 Zero Page

The zero page addressing mode can be used to specify memory and register addresses in the zero page area. Access to this area is possible with only 2 bytes in the zero page addressing mode.

8.2.8 Special Page

The special page addressing mode can be used to specify memory addresses in the special page area. Access to this area is possible with only 2 bytes in the special page addressing mode.

8.2.9 ROM Correction Memory (RAM)

This is used as the program area for ROM correction.

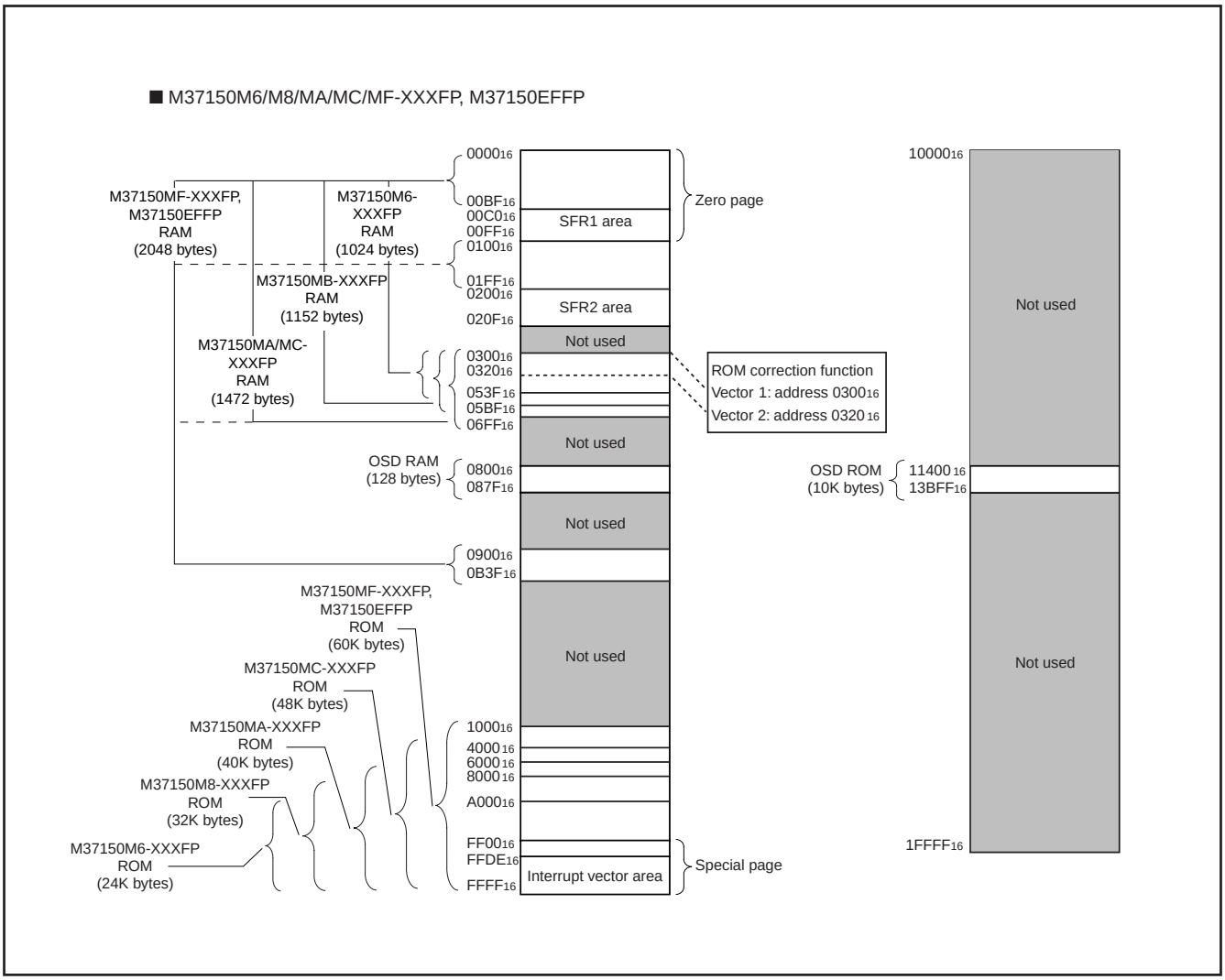

Fig. 8.2.1 Memory Map (M37150M6/M8/MA/MC/MF-XXXFP, M37150EFFP)

■ SFR1 Area (addresses $C0_{16}$ to DF_{16})

<Bit allocation>

- [ ] : } Function bit
- [Name] : } Function bit
- [ ] : No function bit
- [0] : Fix this bit to "0" (do not write "1")
- [1] : Fix this bit to "1" (do not write "0")

<State immediately after reset>

- [0] : "0" immediately after reset
- [1] : "1" immediately after reset
- [?] : Indeterminate immediately after reset

Address	Register	Bit allocation b7							b0	State immediately after reset b7							b0
$C0_{16}$	Port P0(P0)									?							
$C1_{16}$	Port P0 direction register (D0)									00_{16}							
$C2_{16}$	Port P1(P1)	0								?	?	0	?	?	?	?	?
$C3_{16}$	Port P1 direction register (D1)	0								0	0	1	0	0	0	0	1
$C4_{16}$	Port P2(P2)									?							
$C5_{16}$	Port P2 direction register (D2)									00_{16}							
$C6_{16}$	Port P3(P3)					BSEL21	BSEL20	P31	P30	0	0	0	0	0	0	?	?
$C7_{16}$	Port P3 direction register (D3)	T2SC	T3SC			0	OUTS	P31D	P30D	00_{16}							
$C8_{16}$		0	0	0	0	0	0	0	0	?							
$C9_{16}$		0	0	1	1	1	1	1	1	?							
CA_{16}	Port P5(P5)	0	0					0	0	?							
CB_{16}	OSD port control register (PF)	1	0	PF5	PF4	PF3	PF2	0	0	0	?	0	0	0	0	0	0
CC_{16}	Timer return set register (TMS)	TMS	0	1	0	0	0	0	0	00_{16}							
CD_{16}	Clock control register 1 (CC1)	0	0	0	0	0	0	0	CC10	00_{16}							
CE_{16}	Caption data register 3 (CD3)	CDL27	CDL26	CDL25	CDL24	CDL23	CDL22	CDL21	CDL20	?							
CF_{16}	Caption data register 4 (CD4)	CDH27	CDH26	CDH25	CDH24	CDH23	CDH22	CDH21	CDH20	?							
$D0_{16}$	OSD control register (OC)	OC7	0	0	OC4	OC3	OC2	OC1	OC0	00_{16}							
$D1_{16}$	Horizontal position register (HP)		HP6	HP5	HP4	HP3	HP2	HP1	HP0	00_{16}							
$D2_{16}$	Block control register 1(BC1)	BC17	BC16	BC15	BC14	BC13	BC12	BC11	BC10	?							
$D3_{16}$	Block control register 2(BC2)	BC27	BC26	BC25	BC24	BC23	BC22	BC21	BC20	?							
$D4_{16}$	Vertical position register 1(VP1)	VP17	VP16	VP15	VP14	VP13	VP12	VP11	VP10	?							
$D5_{16}$	Vertical position register 2(VP2)	VP27	VP26	VP25	VP24	VP23	VP22	VP21	VP20	?							
$D6_{16}$	Window register 1(WN1)	WN17	WN16	WN15	WN14	WN13	WN12	WN11	WN10	?							
$D7_{16}$	Window register 2(WN2)	WN27	WN26	WN25	WN24	WN23	WN22	WN21	WN20	?							
$D8_{16}$	I/O polarity control register (PC)	0	PC6	PC5	0	PC3	PC2	PC1	PC0	40_{16}							
$D9_{16}$	Raster color register (RC)	RC7	0	0	0	RC3	RC2	RC1	RC0	00_{16}							
DA_{16}										?							
DB_{16}	OSD control register 2(OC2)	0	0	0			0	OC21	OC20	0	0	0	?	0	0	0	0
DC_{16}	Interrupt input polarity control register (RE)						INT3	INT2	INT1	00_{16}							
DD_{16}		00_{16}								00_{16}							
DE_{16}		00_{16}								00_{16}							
DF_{16}		00_{16}								00_{16}							

Fig. 8.2.2 Memory Map of Special Function Register 1 (SFR1) (1)

■ SFR1 Area (addresses $E0_{16}$ to FF_{16})

<Bit allocation>

: Function bit

: No function bit

0 : Fix this bit to "0" (do not write "1")

1 : Fix this bit to "1" (do not write "0")

<State immediately after reset>

0 : "0" immediately after reset

1 : "1" immediately after reset

? : Indeterminate immediately after reset

Address	Register	Bit allocation b7							b0	State immediately after reset b7							b0
$E0_{16}$	Data slicer control register 1 (DSC1)	0	1	1	0	0	DSC12	DSC11	DSC10	00_{16}							
$E1_{16}$	Data slicer control register 2 (DSC2)		0	DSC25	DSC24	DSC23		1	DSC20	?	0	?	0	?	?	0	?
$E2_{16}$	Caption data register 1 (CD1)	CDL17	CDL16	CDL15	CDL14	CDL13	CDL12	CDL11	CDL10	00_{16}							
$E3_{16}$	Caption data register 2 (CD2)	CDH17	CDH16	CDH15	CDH14	CDH13	CDH12	CDH11	CDH10	00_{16}							
$E4_{16}$	Clock run-in detect register (CRD)	CRD7	CRD6	CRD5	CRD4	CRD3				00_{16}							
$E5_{16}$	Data clock position register (DPS)	DPS7	DPS6	DPS5	DPS4	DPS3	0	1	0	09_{16}							
$E6_{16}$	Caption position register (CPS)	CPS7	CPS6	CPS5	CPS4	CPS3	CPS2	CPS1	CPS0	0	0	?	0	0	0	0	0
$E7_{16}$	Data slicer test register 2									00_{16}							
$E8_{16}$	Data slicer test register 1									00_{16}							
$E9_{16}$	Synchronous signal counter register (HC)			HC5	HC4	HC3	HC2	HC1	HC0	00_{16}							
EA_{16}	Serial I/O register (SIO)									?							
EB_{16}	Serial I/O mode register (SM)	0	SM6	SM5	0	SM3	SM2	SM1	SM0	00_{16}							
EC_{16}	A-D control register 1 (AD1)				ADC14		ADC12	ADC11	ADC10	0	0	0	?	0	0	0	0
ED_{16}	A-D control register 2 (AD2)		ADC26	ADC25	ADC24	ADC23	ADC22	ADC21	ADC20	00_{16}							
EE_{16}	Timer 5 (T5)									07_{16}							
EF_{16}	Timer 6 (T6)									FF_{16}							
$F0_{16}$	Timer 1 (T1)									FF_{16}							
$F1_{16}$	Timer 2 (T2)									07_{16}							
$F2_{16}$	Timer 3 (T3)									FF_{16}							
$F3_{16}$	Timer 4 (T4)									07_{16}							
$F4_{16}$	Timer mode register 1 (TM1)	TM17	TM16	TM15	TM14	TM13	TM12	TM11	TM10	00_{16}							
$F5_{16}$	Timer mode register 2 (TM2)	TM27	TM26	TM25	TM24	TM23	TM22	TM21	TM20	00_{16}							
$F6_{16}$	I^2C data shift register (S0)	D7	D6	D5	D4	D3	D2	D1	D0	?							
$F7_{16}$	I^2C address register (S0D)	SAD6	SAD5	SAD4	SAD3	SAD2	SAD1	SAD0	RBW	00_{16}							
$F8_{16}$	I^2C status register (S1)	MST	TRX	BB	PIN	AL	AAS	AD0	LRB	0	0	0	1	0	0	0	?
$F9_{16}$	I^2C control register (S1D)	BSEL1	BSEL0	10BIT SAD	ALS	ESO	BC2	BC1	BC0	00_{16}							
FA_{16}	I^2C clock control register (S2)	ACK	ACK BIT	FAST MODE	CCR4	CCR3	CCR2	CCR1	CCR0	00_{16}							
FB_{16}	CPU mode register (CPUM)	CM7	CM6	CM5	1	1	CM2	0	0	$3C_{16}$							
FC_{16}	Interrupt request register 1 (IREQ1)		IN3R	VSCR	OSDR	TM4R	TM3R	TM2R	TM1R	00_{16}							
FD_{16}	Interrupt request register 2 (IREQ2)	0	TM56R	IICR	IN2R	CKR	S1R	DSR	IN1R	00_{16}							
FE_{16}	Interrupt control register 1 (ICON1)		IN3E	VSCE	OSDE	TM4E	TM3E	TM2E	TM1E	00_{16}							
FF_{16}	Interrupt control register 2 (ICON2)	TM56C	TM56E	IICE	IN2E	CKE	S1E	DSE	IN1E	00_{16}							

Fig. 8.2.3 Memory Map of Special Function Register 1 (SFR1) (2)

■SFR2 Area (addresses 200_{16} to $20F_{16}$)

<Bit allocation>

- [ ] : Function bit
- [Name] : Function bit
- [ ] : No function bit
- [0] : Fix this bit to 0 (do not write 1)
- [1] : Fix this bit to 1 (do not write 0)

<State immediately after reset>

- [0] : 0 immediately after reset
- [1] : 1 immediately after reset
- [?] : Indeterminate immediately after reset

Address	Register	Bit allocation b7							b0	State immediately after reset b7							b0
200_{16}	PWM0 register (PWM0)									?							
201_{16}	PWM1 register (PWM1)									?							
202_{16}	PWM2 register (PWM2)									?							
203_{16}	PWM3 register (PWM3)									?							
204_{16}	PWM4 register (PWM4)									?							
205_{16}										?							
206_{16}		00_{16}								?							
207_{16}		00_{16}								?							
208_{16}	PWM mode register 1 (PM1)					PM13			PM10	?	?	?	?	0	?	?	0
209_{16}	PWM mode register 2 (PM2)	0	0	0	PM24	PM23	PM22	PM21	PM20	00_{16}							
$20A_{16}$	ROM correction address 1 (high-order)									00_{16}							
$20B_{16}$	ROM correction address 1 (low-order)									00_{16}							
$20C_{16}$	ROM correction address 2 (high-order)									00_{16}							
$20D_{16}$	ROM correction address 2 (low-order)									00_{16}							
$20E_{16}$	ROM correction enable register (RCR)							RC1	RC0	00_{16}							
$20F_{16}$										?							
210_{16}	Clock frequency set register (CFS)									0	0	0	0	1	1	1	0
211_{16}	Clock control register 2(CC2)	0	0	0	0	1	CC22	0	0	00_{16}							
212_{16}	Clock control register 3(CC3)	CC37	0	CC35	0	0	0	0	0	00_{16}							

Fig. 8.2.4 Memory Map of Special Function Register 2 (SFR2)

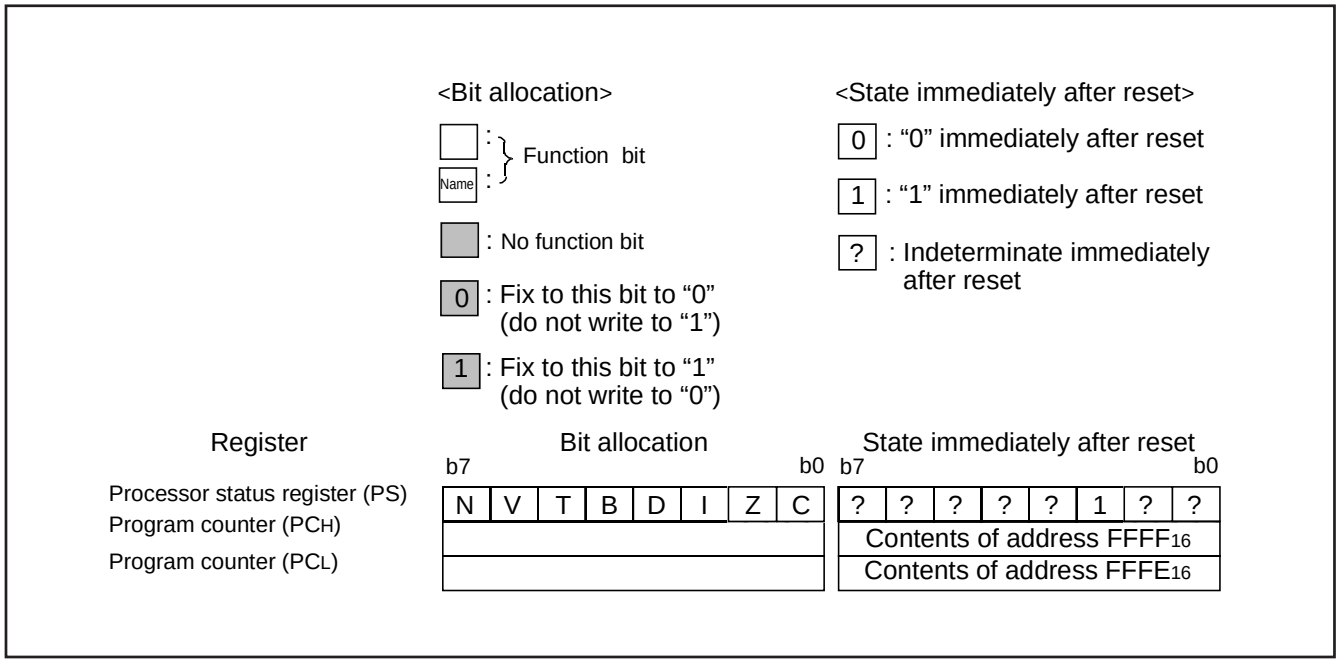

Fig. 8.2.5 Internal State of Processor Status Register and Program Counter at Reset

8.3 INTERRUPTS

Interrupts can be caused by 17 different sources comprising 4 external, 11 internal, 1 software, and 1 reset interrupts. Interrupts are vectored interrupts with priorities as shown in Table 8.3.1. Reset is also included in the table as its operation is similar to an interrupt.

When an interrupt is accepted,

① The contents of the program counter and processor status regis ter are automatically stored into the stack.

② The interrupt disable flag I is set to “1” and the corresponding interrupt request bit is set to “0.”

③ The jump destination address stored in the vector address enters the program counter. Other interrupts are disabled when the in terrupt disable flag is set to “1.”

All interrupts except the BRK instruction interrupt have an inter rupt request bit and an interrupt enable bit. The interrupt request bits are in Interrupt Request Registers 1 and 2 and the interrupt enable bits are in Interrupt Control Registers 1 and 2. Figures 8.3.2 to 8.3.6 show the interrupt-related registers.

Interrupts other than the BRK instruction interrupt and reset are accepted when the interrupt enable bit is “1,” interrupt request bit is “1,” and the interrupt disable flag is “0.” The interrupt request bit can be set to “0” by a program, but not set to “1.” The interrupt enable bit can be set to “0” and “1” by a program.

Reset is treated as a non-maskable interrupt with the highest pri ority.

Figure 8.3.1 shows interrupt controls.

8.3.1 Interrupt Causes

(1) VSYNC, OSD interrupts

The VSYNC interrupt is an interrupt request synchronized with the vertical sync signal. The OSD interrupt occurs after character block display to the CRT is completed.

(2) INT1 to INT3 external interrupts

The INT1 to INT3 interrupts are external interrupt inputs; the system detects that the level of a pin changes from LOW to HIGH or from HIGH to LOW, and generates an interrupt request. The input active edge can be selected by bits 0 to 2 of the Interrupt Input Polarity Register (address $00DC_{16}$); when this bit is “0,” a change from LOW to HIGH is detected; when it is “1,” a change from HIGH to LOW is detected. Note that both bits are cleared to “0” at reset.

(3) Timers 1 to 4 interrupts

An interrupt is generated by an overflow of timers 1 to 4.

(4) Serial I/O interrupt

This is an interrupt request from the clock synchronous serial I/O function.

Table 8.3.1 Interrupt Vector Addresses and Priority

Priority	Interrupt Source	Vector Addresses	Remarks
1	Reset	$FFFF_{16}$, $FFFE_{16}$	Non-maskable
2	OSD interrupt	$FFFD_{16}$, $FFFC_{16}$	
3	INT1 external interrupt	$FFFB_{16}$, $FFFA_{16}$	Active edge selectable
4	Data slicer interrupt	$FFF9_{16}$, $FFF8_{16}$	
5	Serial I/O interrupt	$FFF7_{16}$, $FFF6_{16}$	
6	Timer 4 interrupt	$FFF5_{16}$, $FFF4_{16}$	
7	f(XIN)/4096 interrupt	$FFF3_{16}$, $FFF2_{16}$	
8	VSYNC interrupt	$FFF1_{16}$, $FFF0_{16}$	
9	Timer 3 interrupt	$FFEF_{16}$, $FFEE_{16}$	
10	Timer 2 interrupt	$FFED_{16}$, $FFEC_{16}$	
11	Timer 1 interrupt	$FFEB_{16}$, $FFEA_{16}$	
12	INT3 external interrupt	$FFE9_{16}$, $FFE8_{16}$	Active edge selectable
13	INT2 external interrupt	$FFE7_{16}$, $FFE6_{16}$	Active edge selectable
14	Multi-master I^2C-BUS interface interrupt	$FFE5_{16}$, $FFE4_{16}$	
15	Timer 5 • 6 interrupt	$FFE3_{16}$, $FFE2_{16}$	Source switch by software (see note)
16	BRK instruction interrupt	$FFDF_{16}$, $FFDE_{16}$	Non-maskable

Note: Switching a source during a program causes an unnecessary interrupt. Therefore, set a source at initializing of program.

(5) f(XIN)/4096 interrupt

The f(XIN)/4096 interrupt occurs regularly with a period of f(XIN)/4096. Set bit 0 of the PWM mode register 1 to “0.”

(6) Data slicer interrupt

An interrupt occurs when slicing data is completed.

(7) Multi-master I^{2}C-BUS interface interrupt

This is an interrupt request related to the multi-master I^{2}C-BUS interface.

(8) Timer 5 • 6 interrupt

An interrupt is generated by an overflow of timer 5 or 6. Their priorities are same, and can be switched by software.

(9) BRK instruction interrupt

This software interrupt has the least significant priority. It does not have a corresponding interrupt enable bit, and it is not affected by the interrupt disable flag I (non-maskable).

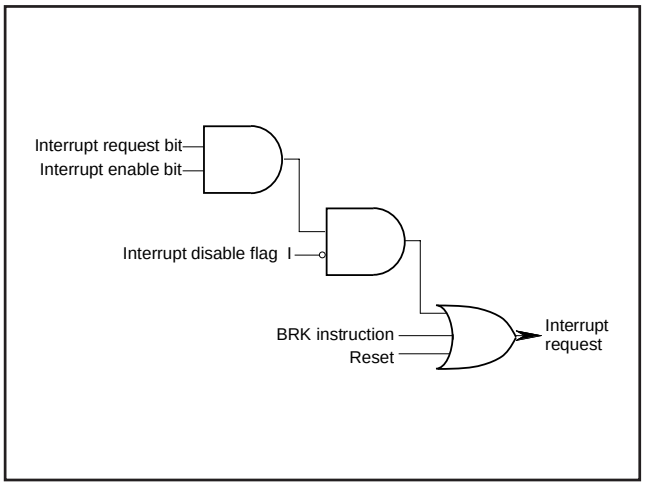

Fig. 8.3.1 Interrupt Control

Interrupt Request Register 1

b7 b6 b5 b4 b3 b2 b1 b0

Interrupt request register 1 (IREQ1) [Address 00FC16]

B	Name	Functions	Afrer reset	R	W
0	Timer 1 interrupt request bit (TM1R)	0 : No interrupt request issued 1 : Interrupt request issued	0	R	✻
1	Timer 2 interrupt request bit (TM2R)	0 : No interrupt request issued 1 : Interrupt request issued	0	R	✻
2	Timer 3 interrupt request bit (TM3R)	0 : No interrupt request issued 1 : Interrupt request issued	0	R	✻
3	Timer 4 interrupt request bit (TM4R)	0 : No interrupt request issued 1 : Interrupt request issued	0	R	✻
4	OSD interrupt request bit (OSDR)	0 : No interrupt request issued 1 : Interrupt request issued	0	R	✻
5	VSYNC interrupt request bit (VSCR)	0 : No interrupt request issued 1 : Interrupt request issued	0	R	✻
6	INT3 external interrupt request bit (IN3R)	0 : No interrupt request issued 1 : Interrupt request issued	0	R	✻
7	Nothing is assigned. This bit is a write disable bit. When this bit is read out, the value is “0.”		0	R	—

✻: “0” can be set by software, but “1” cannot be set.

Fig. 8.3.2 Interrupt Request Register 1

Interrupt Request Register 2

b7 b6 b5 b4 b3 b2 b1 b0

Interrupt request register 2 (IREQ2) [Address 00FD16]

B	Name	Functions	After reset	R	W
0	INT1 external interrupt request bit (IN1R)	0 : No interrupt request issued 1 : Interrupt request issued	0	R	✻
1	Data slicer interrupt request bit (DSR)	0 : No interrupt request issued 1 : Interrupt request issued	0	R	✻
2	Serial I/O interrupt request bit (SIR)	0 : No interrupt request issued 1 : Interrupt request issued	0	R	✻
3	f(XIN)/4096 interrupt request bit (CKR)	0 : No interrupt request issued 1 : Interrupt request issued	0	R	✻
4	INT2 external interrupt request bit (IN2R)	0 : No interrupt request issued 1 : Interrupt request issued	0	R	✻
5	Multi-master I^2C-BUS interrupt request bit (IICR)	0 : No interrupt request issued 1 : Interrupt request issued	0	R	✻
6	Timer 5 • 6 interrupt request bit (TM56R)	0 : No interrupt request issued 1 : Interrupt request issued	0	R	✻
7	Fix this bit to “0.”		0	R	W

✻: “0” can be set by software, but “1” cannot be set.

Fig. 8.3.3 Interrupt Request Register 2

Interrupt Control Register 1

b7 b6 b5 b4 b3 b2 b1 b0

Interrupt control register 1 (ICON1) [Address 00FE16]

B	Name	Functions	After reset	R	W
0	Timer 1 interrupt enable bit (TM1E)	0 : Interrupt disabled 1 : Interrupt enabled	0	R	W
1	Timer 2 interrupt enable bit (TM2E)	0 : Interrupt disabled 1 : Interrupt enabled	0	R	W
2	Timer 3 interrupt enable bit (TM3E)	0 : Interrupt disabled 1 : Interrupt enabled	0	R	W
3	Timer 4 interrupt enable bit (TM4E)	0 : Interrupt disabled 1 : Interrupt enabled	0	R	W
4	OSD interrupt enable bit (OSDE)	0 : Interrupt disabled 1 : Interrupt enabled	0	R	W
5	VSYNC interrupt enable bit (VSCE)	0 : Interrupt disabled 1 : Interrupt enabled	0	R	W
6	INT3 external interrupt enable bit (IN3E)	0 : Interrupt disabled 1 : Interrupt enabled	0	R	W
7	Nothing is assigned. This bit is a write disable bit. When this bit is read out, the value is “0.”		0	R	—

Fig. 8.3.4 Interrupt Control Register 1

Interrupt Control Register 2

b7 b6 b5 b4 b3 b2 b1 b0

Interrupt control register 2 (ICON2) [Address 00FF16]

B	Name	Functions	After reset	R	W
0	INT1 external interrupt enable bit (IN1E)	0 : Interrupt disabled 1 : Interrupt enabled	0	R	W
1	Data slicer interrupt enable bit (DSE)	0 : Interrupt disabled 1 : Interrupt enabled	0	R	W
2	Serial I/O interrupt enable bit (SIE)	0 : Interrupt disabled 1 : Interrupt enabled	0	R	W
3	f(XIN)/4096 interrupt enable bit (CKE)	0 : Interrupt disabled 1 : Interrupt enabled	0	R	W
4	INT2 external interrupt enable bit (IN2E)	0 : Interrupt disabled 1 : Interrupt enabled	0	R	W
5	Multi-master I^2C-BUS interface interrupt enable bit (IICE)	0 : Interrupt disabled 1 : Interrupt enabled	0	R	W
6	Timer 5 • 6 interrupt enable bit (TM56E)	0 : Interrupt disabled 1 : Interrupt enabled	0	R	W
7	Timer 5 • 6 interrupt switch bit (TM56C)	0 : Timer 5 1 : Timer 6	0	R	W

Fig. 8.3.5 Interrupt Control Register 2

Interrupt Input Polarity Register

Interrupt input polarity register (RE) [Address 00DC$_{16}$]

B	Name	Functions	After reset	R	W
0	INT1 polarity switch bit (INT1)	0 : Positive polarity 1 : Negative polarity	0	R	W
1	INT2 polarity switch bit (INT2)	0 : Positive polarity 1 : Negative polarity	0	R	W
2	INT3 polarity switch bit (INT3)	0 : Positive polarity 1 : Negative polarity	0	R	W
3 to 7	Nothing is assigned. These bits are write disable bits. When these bits are read out, the values are “0.”		0	R	—

Fig. 8.3.6 Interrupt Input Polarity Register

8.4 TIMERS

This microcomputer has 6 timers: timer 1, timer 2, timer 3, timer 4, timer 5, and timer 6. All timers are 8-bit timers with the 8-bit timer latch. The timer block diagram is shown in Figure 8.4.3.

All of the timers count down and their divide ratio is 1/(n+1), where n is the value of timer latch. By writing a count value to the corresponding timer latch (addresses $00F0_{16}$ to $00F3_{16}$: timers 1 to 4, addresses $00EE_{16}$ and $00EF_{16}$: timers 5 and 6), the value is also set to a timer, simultaneously.

The count value is decremented by 1. The timer interrupt request bit is set to "1" by a timer overflow at the next count pulse, after the count value reaches "00_{16}".

8.4.1 Timer 1

Timer 1 can select one of the following count sources:

- f(X_{IN})/16 or f(X_{CIN})/16
- f(X_{IN})/4096 or f(X_{CIN})/4096
- External clock from the TIM2 pin

The count source of timer 1 is selected by setting bits 5 and 0 of timer mode register 1 (address $00F4_{16}$). Either f(X_{IN}) or f(X_{CIN}) is selected by bit 7 of the CPU mode register.

Timer 1 interrupt request occurs at timer 1 overflow.

8.4.2 Timer 2

Timer 2 can select one of the following count sources:

- f(X_{IN})/16 or f(X_{CIN})/16
- Timer 1 overflow signal
- External clock from the TIM2 pin

The count source of timer 2 is selected by setting bits 4 and 1 of timer mode register 1 (address $00F4_{16}$). Either f(X_{IN}) or f(X_{CIN}) is selected by bit 7 of the CPU mode register. When timer 1 overflow signal is a count source for the timer 2, the timer 1 functions as an 8-bit prescaler.

Timer 2 interrupt request occurs at timer 2 overflow.

8.4.3 Timer 3

Timer 3 can select one of the following count sources:

- f(X_{IN})/16 or f(X_{CIN})/16
- f(X_{CIN})
- External clock from the TIM3 pin

The count source of timer 3 is selected by setting bit 0 of timer mode register 2 (address $00F5_{16}$) and bit 6 at address $00C7_{16}$. Either f(X_{IN}) or f(X_{CIN}) is selected by bit 7 of the CPU mode register.

Timer 3 interrupt request occurs at timer 3 overflow.

8.4.4 Timer 4

Timer 4 can select one of the following count sources:

- f(X_{IN})/16 or f(X_{CIN})/16
- f(X_{IN})/2 or f(X_{CIN})/2
- f(X_{CIN})

The count source of timer 3 is selected by setting bits 1 and 4 of the timer mode register 2 (address $00F5_{16}$). Either f(X_{IN}) or f(X_{CIN}) is selected by bit 7 of the CPU mode register. When timer 3 overflow signal is a count source for the timer 4, the timer 3 functions as an 8-bit prescaler.

Timer 4 interrupt request occurs at timer 4 overflow.

8.4.5 Timer 5

Timer 5 can select one of the following count sources:

- f(X_{IN})/16 or f(X_{CIN})/16
- Timer 2 overflow signal
- Timer 4 overflow signal

The count source of timer 3 is selected by setting bit 6 of timer mode register 1 (address $00F4_{16}$) and bit 7 of the timer mode register 2 (address $00F5_{16}$). When overflow of timer 2 or 4 is a count source for timer 5, either timer 2 or 4 functions as an 8-bit prescaler. Either f(X_{IN}) or f(X_{CIN}) is selected by bit 7 of the CPU mode register.

Timer 5 interrupt request occurs at timer 5 overflow.

8.4.6 Timer 6

Timer 6 can select one of the following count sources:

- f(X_{IN})/16 or f(X_{CIN})/16
- Timer 5 overflow signal

The count source of timer 6 is selected by setting bit 7 of the timer mode register 1 (address $00F4_{16}$). Either f(X_{IN}) or f(X_{CIN}) is selected by bit 7 of the CPU mode register. When timer 5 overflow signal is a count source for timer 6, the timer 5 functions as an 8-bit prescaler.

Timer 6 interrupt request occurs at timer 6 overflow.

At reset, timers 3 and 4 are connected by hardware and "FF_{16}" is automatically set in timer 3; "07_{16}" in timer 4. The f(X_{IN})* /16 is selected as the timer 3 count source. The internal reset is released by timer 4 overflow in this state and the internal clock is connected.

At execution of the STP instruction, timers 3 and 4 are connected by hardware and "FF_{16}" is automatically set in timer 3; "07_{16}" in timer 4. However, the f(X_{IN})* /16 is not selected as the timer 3 count source. So set both bit 0 of timer mode register 2 (address $00F5_{16}$) and bit 6 at address $00C7_{16}$ to "0" before the execution of the STP instruction (f(X_{IN})* /16 is selected as timer 3 count source). The internal STP state is released by timer 4 overflow in this state and the internal clock is connected.

As a result of the above procedure, the program can start under a stable clock.

*: When CPU Mode Register bit 7 (CM7) = 1, f(X_{IN}) becomes f(X_{CIN}).

The timer-related registers is shown in Figures 8.4.1 and 8.4.2.

The input path for the TIM2 pin can be selected between ports $P1_6$ or $P2_4$. Use Port P3 Direction Register (address $00C7_{16}$) bit 7 to select either port.

Timer Mode Register 1

b7 b6 b5 b4 b3 b2 b1 b0

Timer mode register 1 (TM1) [Address 00F4 16]

B	Name	Functions	After reset	R	W
0	Timer 1 count source selection bit 1 (TM10)	0: f(XIN)/16 or f(XCIN)/16 (See note) 1: Count source selected by bit 5 of TM1	0	R	W
1	Timer 2 count source selection bit 1 (TM11)	0: Count source selected by bit 4 of TM1 1: External clock from TIM2 pin	0	R	W
2	Timer 1 count stop bit (TM12)	0: Count start 1: Count stop	0	R	W
3	Timer 2 count stop bit (TM13)	0: Count start 1: Count stop	0	R	W
4	Timer 2 count source selection bit 2 (TM14)	0: f(XIN)/16 or f(XCIN)/16 (See note) 1: Timer 1 overflow	0	R	W
5	Timer 1 count source selection bit 2 (TM15)	0: f(XIN)/4096 or f(XCIN)/4096 (See note) 1: External clock from TIM2 pin	0	R	W
6	Timer 5 count source selection bit 2 (TM16)	0: Timer 2 overflow 1: Timer 4 overflow	0	R	W
7	Timer 6 internal count source selection bit (TM17)	0: f(XIN)/16 or f(XCIN)/16 (See note) 1: Timer 5 overflow	0	R	W

Note: Either f(XIN) or f(XCIN) is selected by bit 7 of the CPU mode register.

Fig. 8.4.1 Timer Mode Register 1

Timer Mode Register 2

b7 b6 b5 b4 b3 b2 b1 b0

Timer mode register 2 (TM2) [Address 00F5 16]

B	Name	Functions	After reset	R	W
0	Timer 3 count source selection bit (TM20)	(b6 at address 00C7 16) b0 0 0 : f(XIN)/16 or f(XCIN)/16 (See note) 1 0 : f(XCIN) 0 1 : 1 1 : } External clock from TIM3 pin	0	R	W
1, 4	Timer 4 count source selection bits (TM21, TM24)	b4 b1 0 0 : Timer 3 overflow signal 0 1 : f(XIN)/16 or f(XCIN)/16 (See note) 1 0 : f(XIN)/2 or f(XCIN)/2 (See note) 1 1 : f(XCIN)	0	R	W
2	Timer 3 count stop bit (TM22)	0: Count start 1: Count stop	0	R	W
3	Timer 4 count stop bit (TM23)	0: Count start 1: Count stop	0	R	W
5	Timer 5 count stop bit (TM25)	0: Count start 1: Count stop	0	R	W
6	Timer 6 count stop bit (TM26)	0: Count start 1: Count stop	0	R	W
7	Timer 5 count source selection bit 1 (TM27)	0: f(XIN)/16 or f(XCIN)/16 (See note) 1: Count source selected by bit 6 of TM1	0	R	W

Note: Either f(XIN) or f(XCIN) is selected by bit 7 of the CPU mode register.

Fig. 8.4.2 Timer Mode Register 2

Port P3 direction register

b7	b6	b5	b4	b3	b2	b1	b0
				0			

Port P3 direction register (D3) [Address $00C7_{16}$]

B	Name	Functions	After reset	R	W
0	Port P3 direction register (See note 1)	0 : Port $P3_0$ input 1 : Port $P3_0$ output	0	R	W
1		0 : Port $P3_1$ input 1 : Port $P3_1$ output	0	R	W
2	Output amplitude level selection bit (OUTS) (See note 2)	0 : 2 value output 1 : 3 value output	0	R	W
3	Fix this bit to "0."		0	R	W
4,5	Nothing is assigned fix these bits When this bit are read out, the value are "0."		0	R	–
6	Timer 3 (T3SC)	Refer to explanation of a timer	0	R	W
7	Timer 2 (T2SC)	0 : $P2_4$ input 1 : $P1_6$ input	0	R	W

Notes 1: When using the port as the I^2C-BUS interface, set the Port P3 Direction Register to 1.
2: Use the Clock Control Register 3 (address 0212_{16}) bit 5 to select the binary output level of OUT.

Fig. 8.4.3 Port P3 direction register

Timer return setting register

b7	b6	b5	b4	b3	b2	b1	b0
	0	1	0	0	0	0	0

Timer return setting register (TMS) [Address $00CC_{16}$]

B	Name	Functions	After reset	R	W
0 to 4	Fix these bits to "0."		0	R	W
5	Fix this bit to "1."		0	R	W
6	Fix this bit to "0."		0	R	W
7	STOP mode return selection bit (TMS)	0: Timer Count "$07FF_{16}$" 1: Timer Count Variable	0	R	W

Fig. 8.4.4 Timer return setting register

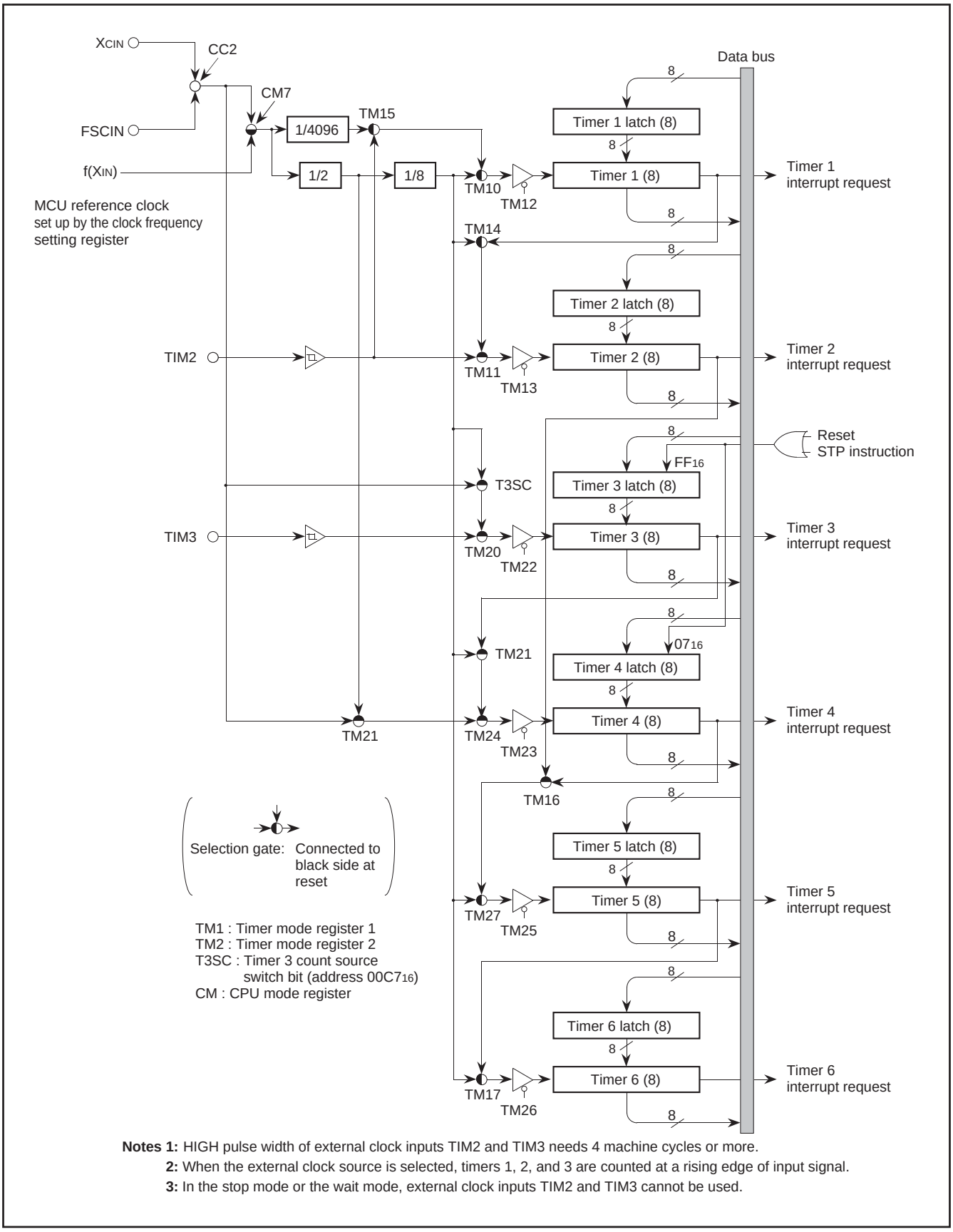

Notes 1: HIGH pulse width of external clock inputs TIM2 and TIM3 needs 4 machine cycles or more.
2: When the external clock source is selected, timers 1, 2, and 3 are counted at a rising edge of input signal.
3: In the stop mode or the wait mode, external clock inputs TIM2 and TIM3 cannot be used.

Fig. 8.4.5 Timer Block Diagram

8.5 SERIAL I/O

This microcomputer has a built-in serial I/O which can either transmit or receive 8-bit data serially in the clock synchronous mode.
The serial I/O block diagram is shown in Figure 8.5.1. The synchronous clock I/O pin (SCLK), and data output pin (SOUT) also function as port P4, data input pin (SIN) also functions as port $P2_0$–$P2_2$.
Bit 3 of the serial I/O mode register (address $00EB_{16}$) selects whether the synchronous clock is supplied internally or externally (from the SCLK pin). When an internal clock is selected, bits 1 and 0 select whether f(XIN) or f(XCIN) is divided by 8, 16, 32, or 64. To use the SIN pin for serial I/O, set the corresponding bit of the port P2 direction register (address $00C5_{16}$) to "0."

The operation of the serial I/O is described below. The operation of the serial I/O differs depending on the clock source; external clock or internal clock.

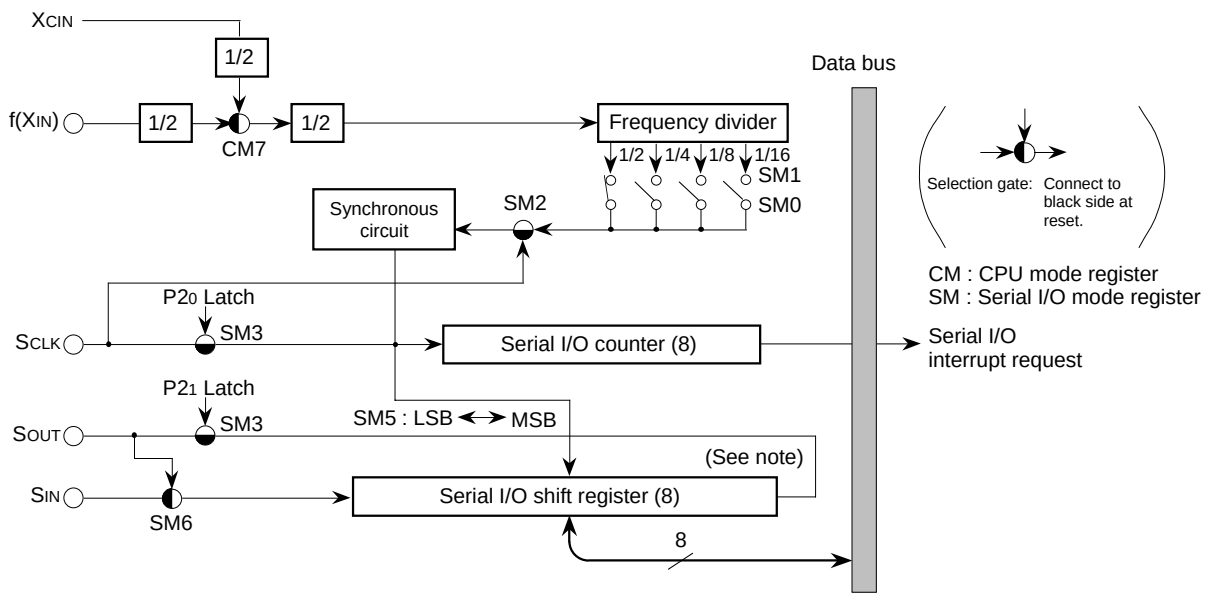

Note : When the data is set in the serial I/O register (address $00EA_{16}$), the register functions as the serial I/O shift register.

Fig. 8.5.1 Serial I/O Block Diagram

Internal clock : The serial I/O counter is set to “7” during the write cycle into the serial I/O register (address 00EA16), and the transfer clock goes HIGH forcibly. At each falling edge of the transfer clock after the write cycle, serial data is output from the SOUT pin. Transfer direction can be selected by bit 5 of the serial I/O mode register. At each rising edge of the transfer clock, data is input from the SIN pin and data in the serial I/O register is shifted 1 bit.
After the transfer clock has counted 8 times, the serial I/O counter becomes “0” and the transfer clock stops at HIGH. At this time the interrupt request bit is set to “1.”

External clock : The an external clock is selected as the clock source, the interrupt request is set to “1” after the transfer clock has been counted 8 counts. However, transfer operation does not stop, so the clock should be controlled externally. Use the external clock of 1 MHz or less with a duty cycle of 50%.
The serial I/O timing is shown in Figure 8.5.2. When using an external clock for transfer, the external clock must be held at HIGH for initializing the serial I/O counter. When switching between an internal clock and an external clock, do not switch during transfer. Also, be sure to initialize the serial I/O counter after switching.

Notes 1: On programming, note that the serial I/O counter is set by writing to the serial I/O register with the bit managing instructions, such as SEB and CLB.
2: When an external clock is used as the synchronous clock, write transmit data to the serial I/O register when the transfer clock input level is HIGH.

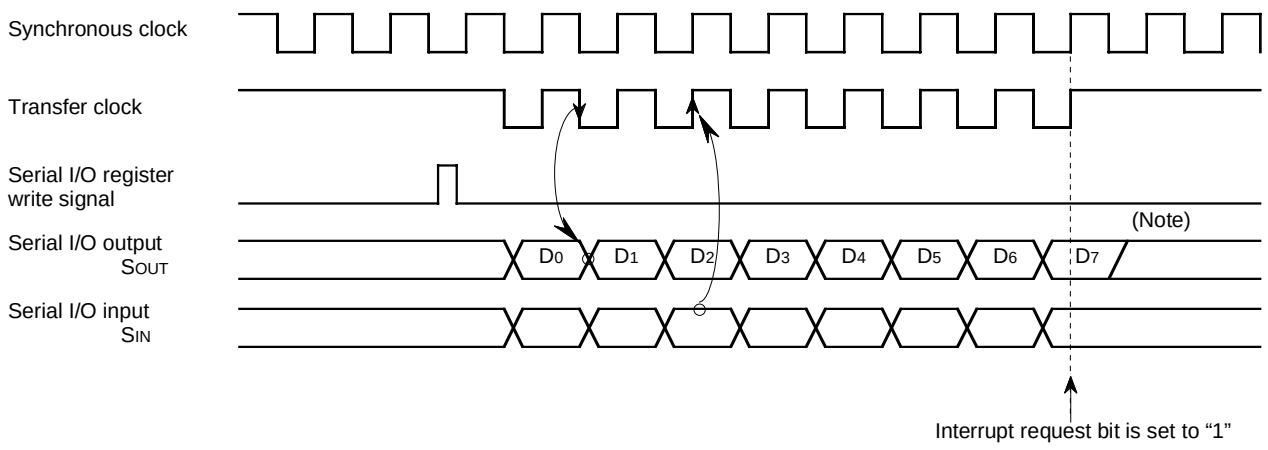

Note : When an internal clock is selected, the SOUT pin is at high-impedance after transfer is completed.

Fig. 8.5.2 Serial I/O Timing (for LSB first)

Serial I/O Mode Register

b7	b6	b5	b4	b3	b2	b1	b0
0			0				

Serial I/O mode register (SM) [Address 00EB16]

B	Name	Functions	After reset	R	W
0, 1	Internal synchronous clock selection bits (SM0, SM1)	b1 b0 0 0: f(XIN)/8 or f(XCIN)/8 0 1: f(XIN)/16 or f(XCIN)/16 1 0: f(XIN)/32 or f(XCIN)/32 1 1: f(XIN)/64 or f(XCIN)/64	0	R	W
2	Synchronous clock selection bit (SM2)	0: External clock 1: Internal clock	0	R	W
3	Port function selection bit (SM3)	0: P20, P21 1: SCLK, SOUT	0	R	W
4	Fix this bit to “0.”		0	R	W
5	Transfer direction selection bit (SM5)	0: LSB first 1: MSB first	0	R	W
6	Transfer clock input pin selection bit (SM6)	0: Input signal from SIN pin 1: Input signal from SOUT pin	0	R	W
7	Fix this bit to “0.”		0	R	W

Fig. 8.5.3 Serial I/O Mode Register

8.6 MULTI-MASTER I²C-BUS INTERFACE

The multi-master I²C-BUS interface is a serial communications circuit, conforming to the Philips I²C-BUS data transfer format. This interface, offering both arbitration lost detection and synchronous function, is useful for multi-master serial communications.

Figure 8.6.1 shows a block diagram of the multi-master I²C-BUS interface and Table 8.6.1 shows multi-master I²C-BUS interface functions.

This multi-master I²C-BUS interface consists of the address register, the data shift register, the clock control register, the control register, the status register and other control circuits.

Table 8.6.1 Multi-master I²C-BUS Interface Functions

Item	Function
Format	In conformity with Philips I²C-BUS standard: 10-bit addressing format 7-bit addressing format High-speed clock mode Standard clock mode
Communication mode	In conformity with Philips I²C-BUS standard: Master transmission Master reception Slave transmission Slave reception
SCL clock frequency	16.1 kHz to 400 kHz (ϕ = at 4 MHz)

ϕ : System clock = f(XIN)/2

Note : We are not responsible for any third party's infringement of patent rights or other rights attributable to the use of the control function (bits 6 and 7 of the I²C control register at address 00F9₁₆) for connections between the I²C-BUS interface and ports (SCL1, SCL2, SDA1, SDA2).
ϕ = 8.95/2 MHz at FSCIN = 3.58 MHz
ϕ = 8.86/2 MHz at FSCIN = 4.43 MHz

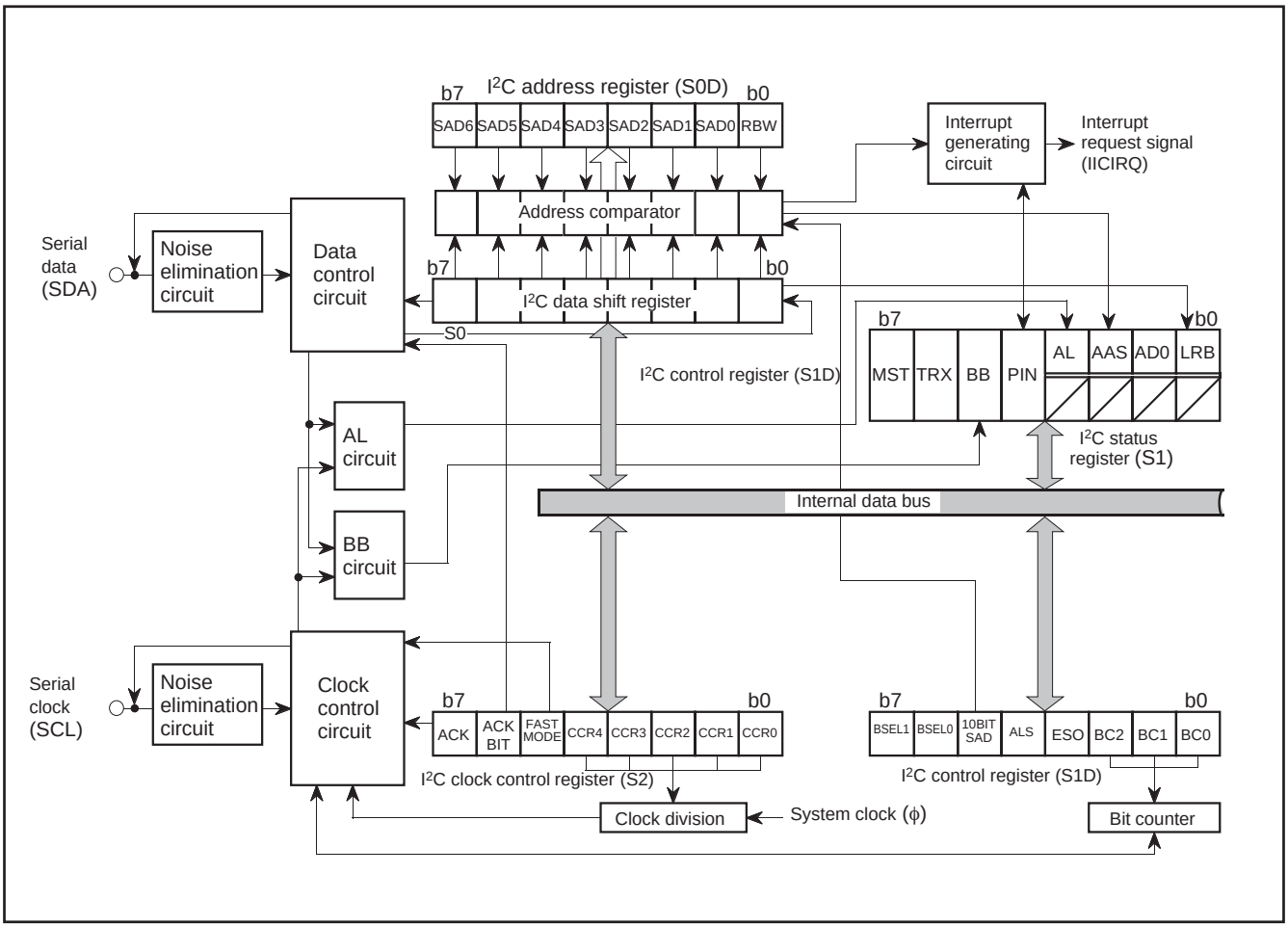

Fig. 8.6.1 Block Diagram of Multi-master I²C-BUS Interface

8.6.1 I²C Data Shift Register

The I²C data shift register (S0 : address 00F6₁₆) is an 8-bit shift register to store receive data and write transmit data.
When transmit data is written into this register, it is transferred to the outside from bit 7 in synchronization with the SCL clock, and each time one-bit data is output, the data of this register are shifted one bit to the left. When data is received, it is input to this register from bit 0 in synchronization with the SCL clock, and each time one-bit data is input, the data of this register are shifted one bit to the left.
The I²C data shift register is in a write enable status only when the ESO bit of the I²C control register (address 00F9₁₆) is "1." The bit counter is reset by a write instruction to the I²C data shift register. When both the ESO bit and the MST bit of the I²C status register (address 00F8₁₆) are "1," the SCL is output by a write instruction to the I²C data shift register. Reading data from the I²C data shift register is always enabled regardless of the ESO bit value.

Note: To write data into the I²C data shift register after setting the MST bit to "0" (slave mode), keep an interval of 8 machine cycles or more.

I²C Data Shift Register

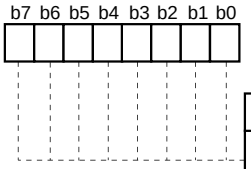

I²C data shift register 1(S0) [Address 00F6₁₆]

B	Name	Functions	After reset	R	W
0 to 7	D0 to D7	This is an 8-bit shift register to store receive data and write transmit data.	Indeterminate	R	W

Note : To write data into the I²C data shift register after setting the MST bit to "0" (slave mode), keep an interval of 8 machine cycles or more.

Fig. 8.6.2 I²C Data Shift Register

8.6.2 I²C Address Register

The I²C address register (address 00F7₁₆) consists of a 7-bit slave address and a $\overline{\text{read}}$/write bit. In the addressing mode, the slave address written in this register is compared with the address data to be received immediately after the START condition is detected.

(1) Bit 0: $\overline{\text{read}}$/write bit (RBW)

Not used when comparing addresses in the 7-bit addressing mode. In the 10-bit addressing mode, the first address data to be received is compared with the contents (SAD6 to SAD0 + RBW) of the I²C address register.
The RBW bit is cleared to “0” automatically when the stop condition is detected.

(2) Bits 1 to 7: slave address (SAD0–SAD6)

These bits store slave addresses. Regardless of the 7-bit addressing mode and the 10-bit addressing mode, the address data transmitted from the master is compared with the contents of these bits.

I²C Address Register

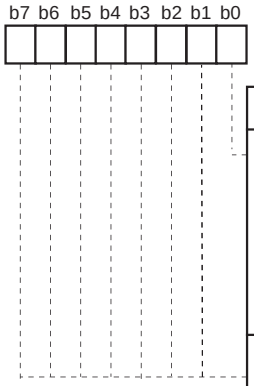

I²C address register (S0D) [Address 00F7₁₆]

B	Name	Functions	After reset	R	W
0	$\overline{\text{Read}}$/write bit (RBW)	<Only in 10-bit addressing (in slave) mode> The last significant bit of address data is compared. 0: Wait the first byte of slave address after START condition (read state) 1: Wait the first byte of slave address after RESTART condition (write state)	0	R	—
1 to 7	Slave address (SAD0 to SAD6)	<In both modes> The address data is compared.	0	R	W

Fig. 8.6.3 I²C Address Register

8.6.3 I²C Clock Control Register

The I²C clock control register (address 00FA16) is used to set ACK control, SCL mode and SCL frequency.

(1) Bits 0 to 4: SCL frequency control bits (CCR0–CCR4)

These bits control the SCL frequency.

(2) Bit 5: SCL mode specification bit (FAST MODE)

This bit specifies the SCL mode. When this bit is set to “0,” the standard clock mode is set. When the bit is set to “1,” the high-speed clock mode is set.

(3) Bit 6: ACK bit (ACK BIT)

This bit sets the SDA status when an ACK clock* is generated. When this bit is set to “0,” the ACK return mode is set and SDA goes to LOW at the occurrence of an ACK clock. When the bit is set to “1,” the ACK non-return mode is set. The SDA is held in the HIGH status at the occurrence of an ACK clock.
However, when the slave address matches the address data in the reception of address data at ACK BIT = “0,” the SDA automatically goes to LOW (ACK is returned). If there is a mismatch between the slave address and the address data, the SDA automatically goes to HIGH (ACK is not returned).

*ACK clock: Clock for acknowledgement

(4) Bit 7: ACK clock bit (ACK)

This bit specifies a mode of acknowledgment which is an acknowledgment response of data transmission. When this bit is set to “0,” the no ACK clock mode is set. In this case, no ACK clock occurs after data transmission. When the bit is set to “1,” the ACK clock mode is set and the master generates an ACK clock upon completion of each 1-byte data transmission.The device for transmitting address data and control data releases the SDA at the occurrence of an ACK clock (make SDA HIGH) and receives the ACK bit generated by the data receiving device.

Note: Do not write data into the I²C clock control register during transmission. If data is written during transmission, the I²C clock generator is reset, so that data cannot be transmitted normally.

I²C Clock Control Register

b7 b6 b5 b4 b3 b2 b1 b0

I²C clock control register (S2) [Address 00FA16]

B	Name	Functions			After reset	R	W
0 to 4	SCL frequency control bits (CCR0 to CCR4)	Setup value of CCR4–CCR0	Standard clock mode	High speed clock mode	0	R	W
		00 to 02	Setup disabled	Setup disabled			
		03	Setup disabled	333			
		04	Setup disabled	250			
		05	100	400 (See note)			
		06	83.3	166			
		⋮	500/CCR value	1000/CCR value			
		1D	17.2	34.5			
		1E	16.6	33.3			
		1F	16.1	32.3			
		(ϕ = at 4 MHz, unit : kHz)					
5	SCL mode specification bit (FAST MODE)	0: Standard clock mode 1: High-speed clock mode			0	R	W
6	ACK bit (ACK BIT)	0: ACK is returned. 1: ACK is not returned.			0	R	W
7	ACK clock bit (ACK)	0: No ACK clock 1: ACK clock			0	R	W

Notes 1. At 400kHz in the high-speed clock mode, the duty is as below .
“0” period : “1” period = 3 : 2
In the other cases, the duty is as below.
“0” period : “1” period = 1 : 1
2. At FSCIN = 3.58 MHz, ϕ = 8.95/2 MHz
At FSCIN = 4.43 MHz, ϕ = 8.86/2 MHz
Values shown in table is as below :
At FSCIN = 3.58 MHz, each value × 8.95/8
At FSCIN = 4.43 MHz, each value × 8.86/8

Fig. 8.6.4 I²C Clock Control Register

8.6.4 I²C Control Register

The I²C control register (address $00F9_{16}$) controls the data communication format.

(1) Bits 0 to 2: bit counter (BC0–BC2)

These bits decide the number of bits for the next 1-byte data to be transmitted. An interrupt request signal occurs immediately after the number of bits specified with these bits are transmitted.
When a START condition is received, these bits become "000_2" and the address data is always transmitted and received in 8 bits.

(2) Bit 3: I²C interface use enable bit (ESO)

This bit enables usage of the multimaster I²C BUS interface. When this bit is set to "0," interface is in the disabled status, so the SDA and the SCL become high-impedance. When the bit is set to "1," use of the interface is enabled.
When ESO = "0," the following is performed.

- PIN = "1," BB = "0" and AL = "0" are set (bits of the I²C status register at address $00F8_{16}$).
- Writing data to the I²C data shift register (address $00F6_{16}$) is disabled.

(3) Bit 4: data format selection bit (ALS)

This bit decides whether or not to recognize slave addresses. When this bit is set to "0," the addressing format is selected, so that address data is recognized. When a match is found between a slave address and address data as a result of comparison or when a general call (refer to "8.6.5 I²C Status Register," bit 1) is received, transmission processing can be performed. When this bit is set to "1," the free data format is selected, so that slave addresses are not recognized.

(4) Bit 5: addressing format selection bit (10BIT SAD)

This bit selects a slave address specification format. When this bit is set to "0," the 7-bit addressing format is selected. In this case, only the high-order 7 bits (slave address) of the I²C address register (address $00F7_{16}$) are compared with address data. When this bit is set to "1," the 10-bit addressing format is selected and all the bits of the I²C address register are compared with the address data.

(5) Bits 6 and 7: connection control bits between I²C-BUS interface and ports (BSEL0, BSEL1)

These bits control the connection between SCL and ports or SDA and ports (refer to Figure 8.6.5).

Note: To connect with SCL3 and SDA3, set bits 2 and 3 of the port P3 register ($00C6_{16}$) .

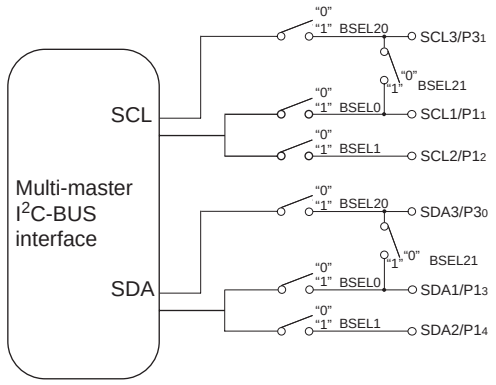

Notes
- The paths SCL1, SCL2, SDA1, and SDA2, as well as the paths SCL3 and SDA3 cannot be connected at the same time.
- Port P3 Register (address $00C6_{16}$) bit 3 is used to control the pin connections of SCL3/P3₁ and SCL1/P1₁ and those of SDA3/P3₀ and SDA1/P1₃.
- Set the corresponding direction register to "1" to use the port as multi-master I²C-BUS interface.

Fig. 8.6.5 Connection Port Control by BSEL0 and BSEL1

I²C Control Register

b7 b6 b5 b4 b3 b2 b1 b0

I²C control register (S1D) [Address 00F9₁₆]

B	Name	Functions	After reset	R	W
0 to 2	Bit counter (Number of transmit/recieve bits) (BC0 to BC2)	b2 b1 b0 0 0 0 : 8 0 0 1 : 7 0 1 0 : 6 0 1 1 : 5 1 0 0 : 4 1 0 1 : 3 1 1 0 : 2 1 1 1 : 1	0	R	W
3	I²C-BUS interface use enable bit (ESO)	0 : Disabled 1 : Enabled	0	R	W
4	Data format selection bit(ALS)	0 : Addressing mode 1 : Free data format	0	R	W
5	Addressing format selection bit (10BIT SAD)	0 : 7-bit addressing format 1 : 10-bit addressing format	0	R	W
6, 7	Connection control bits between I²C-BUS interface and ports (BSEL0, BSEL1)	b7 b6 Connection port (See note) 0 0: None 0 1: SCL1, SDA1 1 0: SCL2, SDA2 1 1: SCL1, SDA1 SCL2, SDA2	0	R	W

Note: • Set the corresponding direction register to "1" to use the port as multi-master I²C-BUS interface.
• To use SCL1, SDA1, SCL2 and SDA2, set the port P3 Register (address 00C6₁₆) bit 2 to 0.

Fig. 8.6.6 I²C Control Register

Port P3 register

b7 b6 b5 b4 b3 b2 b1 b0

Port P3 register (P3) [Address 00C6₁₆]

B	Name	Functions	After reset	R	W
0	Port P3 register	Port $P3_0$ data	Indeterminate	R	W
1		Port $P3_1$ data	Indeterminate	R	W
2	Switch bit of I²C-BUS interface and port P3 (BSEL20) (See note)	0: Port $P3_0$, Port $P3_1$ 1: I²CBUS (SDA3,SCL3)	0	R	W
3	SCL3/$P3_1$-SCL1/$P1_1$ SDA3/$P3_0$-SDA1/$P1_3$ Connection control bit (BSEL21)	0: Cutting 1: Connection	0	R	W
4 to 7	Nothing is assigned. This bit is write disable bit. When this bit is read out, the value is "0."		0	R	–

Notes • For the ports used as the Multi-master I²C-BUS interface, set their direction registers to 1.
• To use SCL3 and SDA3, set the I²C Control Register (address 00F9₁₆) bits 6–7 to 0.

Fig. 8.6.7 Port P3 Register

8.6.5 I²C Status Register

The I²C status register (address 00F8₁₆) controls the I²C-BUS interface status. The low-order 4 bits are read-only bits and the high-order 4 bits can be read out and written to.

(1) Bit 0: last receive bit (LRB)

This bit stores the last bit value of received data and can also be used for ACK receive confirmation. If ACK is returned when an ACK clock occurs, the LRB bit is set to "0." If ACK is not returned, this bit is set to "1." Except in the ACK mode, the last bit value of received data is input. The state of this bit is changed from "1" to "0" by executing a write instruction to the I²C data shift register (address 00F6₁₆).

(2) Bit 1: general call detecting flag (AD0)

This bit is set to "1" when a general call* whose address data is all "0" is received in the slave mode. By a general call of the master device, every slave device receives control data after the general call. The AD0 bit is set to "0" by detecting the STOP condition or START condition.

*General call: The master transmits the general call address "00₁₆" to all slaves.

(3) Bit 2: slave address comparison flag (AAS)

This flag indicates a comparison result of address data.

- In the slave receive mode, when the 7-bit addressing format is selected, this bit is set to "1" in either of the following conditions.
  - The address data immediately after occurrence of a START condition matches the slave address stored in the high-order 7 bits of the I²C address register (address 00F7₁₆).
  - A general call is received.
- In the slave reception mode, when the 10-bit addressing format is selected, this bit is set to "1" in the following condition.
  - When the address data is compared with the I²C address register (8 bits consisting of slave address and RBW), the first bytes match.
- The state of this bit is changed from "1" to "0" by executing a write instruction to the I²C data shift register (address 00F6₁₆).

(4) Bit 3: arbitration lost* detecting flag (AL)

In the master transmission mode, when a device other than the microcomputer sets the SDA to "L," arbitration is judged to have been lost, so that this bit is set to "1." At the same time, the TRX bit is set to "0," so that immediately after transmission of the byte whose arbitration was lost is completed, the MST bit is set to "0." When arbitration is lost during slave address transmission, the TRX bit is set to "0" and the reception mode is set. Consequently, it becomes possible to receive and recognize its own slave address transmitted by another master device.

*Arbitration lost: The status in which communication as a master is disabled.

(5) Bit 4: I²C-BUS interface interrupt request bit (PIN)

This bit generates an interrupt request signal. Each time 1-byte data is transmitted, the state of the PIN bit changes from "1" to "0." At the same time, an interrupt request signal is sent to the CPU. The PIN bit is set to "0" in synchronization with a falling edge of the last clock (including the ACK clock) of an internal clock and an interrupt request signal occurs in synchronization with a falling edge of the PIN bit. When the PIN bit is "0," the SCL is kept in the "0" state and clock generation is disabled. Figure 8.6.9 shows an interrupt request signal generating timing chart.

The PIN bit is set to "1" in any one of the following conditions.

- Executing a write instruction to the I²C data shift register (address 00F6₁₆).
- When the ESO bit is "0"
- At reset

The conditions in which the PIN bit is set to "0" are shown below:

- Immediately after completion of 1-byte data transmission (including when arbitration lost is detected)
- Immediately after completion of 1-byte data reception
- In the slave reception mode, with ALS = "0" and immediately after completion of slave address or general call address reception
- In the slave reception mode, with ALS = "1" and immediately after completion of address data reception

(6) Bit 5: bus busy flag (BB)

This bit indicates the status of the bus system. When this bit is set to "0," this bus system is not busy and a START condition can be generated. When this bit is set to "1," this bus system is busy and the occurrence of a START condition is disabled by the START condition duplication prevention function (See note).

This flag can be written by software only in the master transmission mode. In the other modes, this bit is set to "1" by detecting a START condition and set to "0" by detecting a STOP condition. When the ESO bit of the I²C control register (address 00F9₁₆) is "0" at reset, the BB flag is kept in the "0" state.

(7) Bit 6: communication mode specification bit (transfer direction specification bit: TRX)

This bit decides the direction of transfer for data communication. When this bit is "0," the reception mode is selected and the data of a transmitting device is received. When the bit is "1," the transmission mode is selected and address data and control data are output into the SDA in synchronization with the clock generated on the SCL.

When the ALS bit of the I²C control register (address 00F9₁₆) is "0" in the slave reception mode, the TRX bit is set to "1" (transmit) if the least significant bit (R/$\overline{W}$ bit) of the address data transmitted by the master is "1." When the ALS bit is "0" and the R/$\overline{W}$ bit is "0," the TRX bit is cleared to "0" (receive).

The TRX bit is cleared to "0" in one of the following conditions.

- When arbitration lost is detected.
- When a STOP condition is detected.
- When occurence of a START condition is disabled by the START condition duplication prevention function (Note).
- When MST = "0" and a START condition is detected.
- When MST = "0" and ACK non-return is detected.
- At reset

(8) Bit 7: Communication mode specification bit (master/slave specification bit: MST)

This bit is used for master/slave specification in data communications. When this bit is “0,” the slave is specified, so that a START condition and a STOP condition generated by the master are received, and data communication is performed in synchronization with the clock generated by the master. When this bit is “1,” the master is specified and a START condition and a STOP condition are generated, and also the clocks required for data communication are generated on the SCL.

The MST bit is cleared to “0” in any of the following conditions.

- Immediately after completion of 1-byte data transmission when arbitration lost is detected
- When a STOP condition is detected.
- When occurence of a START condition is disabled by the START condition duplication prevention function (Note).
- At reset

Note: The START condition duplication prevention function disables the START condition generation, bit counter reset, and SCL output, when the following condition is satisfied:
a START condition is set by another master device.

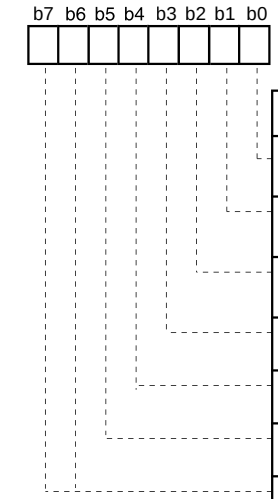

I^{2}C status register (S1) [Address 00F8$_{16}$]

B	Name	Functions	After reset	R	W
0	Last receive bit (LRB) (See note)	0 : Last bit = “0 ” 1 : Last bit = “1 ” (See note)	Indeterminate	R	—
1	General call detecting flag (AD0) (See note)	0 : No general call detected 1 : General call detected (See note)	0	R	—
2	Slave address comparison flag (AAS) (See note)	0 : Address mismatch 1 : Address match (See note)	0	R	—
3	Arbitration lost detecting flag (AL) (See note)	0 : Not detected 1 : Detected (See note)	0	R	—
4	I^{2}C-BUS interface interrupt request bit (PIN)	0 : Interrupt request issued 1 : No interrupt request issued	1	R	W
5	Bus busy flag (BB)	0 : Bus free 1 : Bus busy	0	R	W
6, 7	Communication mode specification bits (TRX, MST)	b7 b6 0 0 : Slave recieve mode 0 1 : Slave transmit mode 1 0 : Master recieve mode 1 1 : Master transmit mode	0	R	W

Note : These bits and flags can be read out, but cannnot be written.

Fig. 8.6.8 I^{2}C Status Register

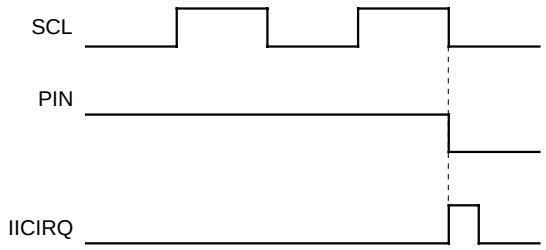

Fig. 8.6.9 Interrupt Request Signal Generation Timing

8.6.6 START Condition Generation Method

When the ESO bit of the I²C control register (address 00F9₁₆) is "1," execute a write instruction to the I²C status register (address 00F8₁₆) to set the MST, TRX and BB bits to "1." A START condition will then be generated. After that, the bit counter becomes "000₂" and an SCL is output for 1 byte. The START condition generation timing and BB bit set timing are different in the standard clock mode and the high-speed clock mode. Refer to Figure 8.6.10 for the START condition generation timing diagram, and Table 8.6.2 for the START condition/STOP condition generation timing table.

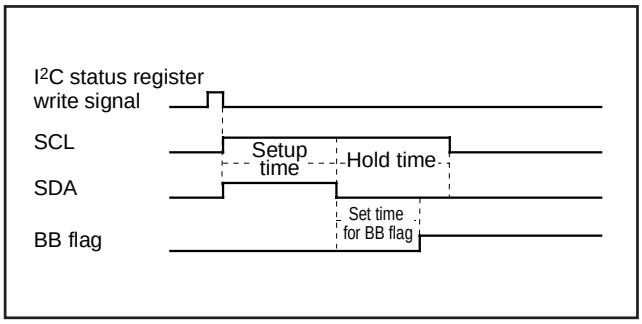

Fig. 8.6.10 START Condition Generation Timing Diagram

8.6.7 STOP Condition Generation Method

When the ESO bit of the I²C control register (address 00F9₁₆) is "1," execute a write instruction to the I²C status register (address 00F8₁₆) to set the MST bit and the TRX bit to "1" and the BB bit to "0". A STOP condition will then be generated. The STOP condition generation timing and the BB flag reset timing are different in the standard clock mode and the high-speed clock mode. Refer to Figure 8.6.11 for the STOP condition generation timing diagram, and Table 8.6.2 for the START condition/STOP condition generation timing table.

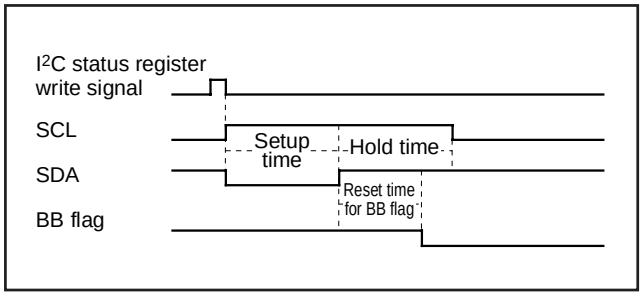

Fig. 8.6.11 STOP Condition Generation Timing Diagram

Table 8.6.2 START Condition/STOP Condition Generation Timing Table

Item	Standard Clock Mode	High-speed Clock Mode
Setup time (START condition)	5.0 μs (20 cycles)	2.5 μs (10 cycles)
Setup time (STOP condition)	4.25 μs (17 cycles)	1.75 μs (7 cycles)
Hold time	5.0 μs (20 cycles)	2.5 μs (10 cycles)
Set/reset time for BB flag	3.0 μs (12 cycles)	1.5 μs (6 cycles)

Note: Absolute time at ϕ = 4 MHz. The value in parentheses denotes the number of ϕ cycles.
ϕ = 8.95/2 MHz at FSCIN = 3.58 MHz
ϕ = 8.86/2 MHz at FSCIN = 4.43 MHz

8.6.8 START/STOP Condition Detect Conditions

The START/STOP condition detect conditions are shown in Figure 8.6.12 and Table 8.6.3. Only when the 3 conditions of Table 8.6.3 are satisfied, a START/STOP condition can be detected.

Note: When a STOP condition is detected in the slave mode (MST = 0), an interrupt request signal "IICIRQ" is generated to the CPU.

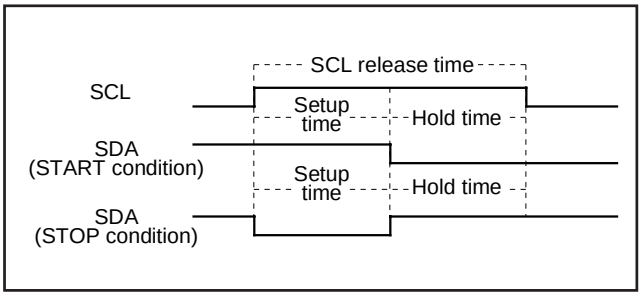

Fig. 8.6.12 START Condition/STOP Condition Detect Timing Diagram

Table 8.6.3 START Condition/STOP Condition Detect Conditions

Standard Clock Mode	High-speed Clock Mode
6.5 μs (26 cycles) < SCL release time	1.0 μs (4 cycles) < SCL release time
3.25 μs (13 cycles) < Setup time	0.5 μs (2 cycles) < Setup time
3.25 μs (13 cycles) < Hold time	0.5 μs (2 cycles) < Hold time

Note: Absolute time at ϕ = 4 MHz. The value in parentheses denotes the number of ϕ cycles.
ϕ = 8.95/2 MHz at FSCIN = 3.58 MHz
ϕ = 8.86/2 MHz at FSCIN = 4.43 MHz

8.6.9 Address Data Communication

There are two address data communication formats, namely, 7-bit addressing format and 10-bit addressing format. The respective address communication formats are described below.

(1) 7-bit addressing format

To support the 7-bit addressing format, set the 10BIT SAD bit of the I^2C control register (address $00F9_{16}$) to "0." The first 7-bit address data transmitted from the master is compared with the high-order 7-bit slave address stored in the I^2C address register (address $00F7_{16}$). At the time of this comparison, address comparison of the RBW bit of the I^2C address register (address $00F7_{16}$) is not made. For the data transmission format when the 7-bit addressing format is selected, refer to Figure 8.6.13, (1) and (2).

(2) 10-bit addressing format

To support the 10-bit addressing format, set the 10BIT SAD bit of the I^2C control register (address $00F9_{16}$) to "1." An address comparison is made between the first-byte address data transmitted from the master and the 7-bit slave address stored in the I^2C address register (address $00F7_{16}$). At the time of this comparison, an address comparison is performed between the RBW bit of the I^2C address register (address $00F7_{16}$) and the R/$\overline{W}$ bit, which is the last bit of the address data transmitted from the master. In the 10-bit addressing mode, the R/$\overline{W}$ bit, not only specifies the direction of communication for control data but is also processed as an address data bit.
When the first-byte address data matches the slave address, the AAS bit of the I^2C status register (address $00F8_{16}$) is set to "1." After the second-byte address data is stored into the I^2C data shift register (address $00F6_{16}$), perform an address comparison between the second-byte data and the slave address by software. When the address data of the 2nd byte matches the slave address, set the RBW bit of the I^2C address register (address $00F7_{16}$) to "1" by software. This processing can match the 7-bit slave address and R/$\overline{W}$ data, which are received after a RESTART condition is detected, with the value of the I^2C address register (address $00F7_{16}$). For the data transmission format when the 10-bit addressing format is selected, refer to Figure 8.6.13, (3) and (4).

8.6.10 Example of Master Transmission

An example of master transmission in the standard clock mode, at the SCL frequency of 100 kHz with the ACK return mode enabled, is shown below.

① Set a slave address in the high-order 7 bits of the I^2C address register (address $00F7_{16}$) and “0” in the RBW bit.
② Set the ACK return mode and SCL = 100 kHz by setting “85_{16}” in the I^2C clock control register (address $00FA_{16}$).
③ Set “10_{16}” in the I^2C status register (address $00F8_{16}$) and hold the SCL at HIGH.
④ Set a communication enable status by setting “48_{16}” in the I^2C control register (address $00F9_{16}$).
⑤ Set the address data of the destination of transmission in the high-order 7 bits of the I^2C data shift register (address $00F6_{16}$) and set “0” in the least significant bit.
⑥ Set “$F0_{16}$” in the I^2C status register (address $00F8_{16}$) to generate a START condition. At this time, an SCL for 1 byte and an ACK clock automatically occurs.
⑦ Set transmit data in the I^2C data shift register (address $00F6_{16}$). At this time, an SCL and an ACK clock automatically occurs.
⑧ When transmitting control data of more than 1 byte, repeat step ⑦.
⑨ Set “$D0_{16}$” in the I^2C status register (address $00F8_{16}$). After this, if ACK is not returned or transmission ends, a STOP condition will be generated.

8.6.11 Example of Slave Reception

An example of slave reception in the high-speed clock mode, at the SCL frequency of 400 kHz, with the ACK non-return mode enabled while using the addressing format, is shown below.

① Set a slave address in the high-order 7 bits of the I^2C address register (address $00F7_{16}$) and “0” in the RBW bit.
② Set the ACK non-return mode and SCL = 400 kHz by setting “25_{16}” in the I^2C clock control register (address $00FA_{16}$).
③ Set “10_{16}” in the I^2C status register (address $00F8_{16}$) and hold the SCL at HIGH.
④ Set a communication enable status by setting “48_{16}” in the I^2C control register (address $00F9_{16}$).
⑤ When a START condition is received, an address comparison is executed.
⑥ •When all transmitted address are“0” (general call):
AD0 of the I^2C status register (address $00F8_{16}$) is set to “1” and an interrupt request signal occurs.
•When the transmitted addresses match the address set in ①:
ASS of the I^2C status register (address $00F8_{16}$) is set to “1” and an interrupt request signal occurs.
•In the cases other than the above:
AD0 and AAS of the I^2C status register (address $00F8_{16}$) are set to “0” and no interrupt request signal occurs.
⑦ Set dummy data in the I^2C data shift register (address $00F6_{16}$).
⑧ When receiving control data of more than 1 byte, repeat step ⑦.
⑨ When a STOP condition is detected, the communication ends.

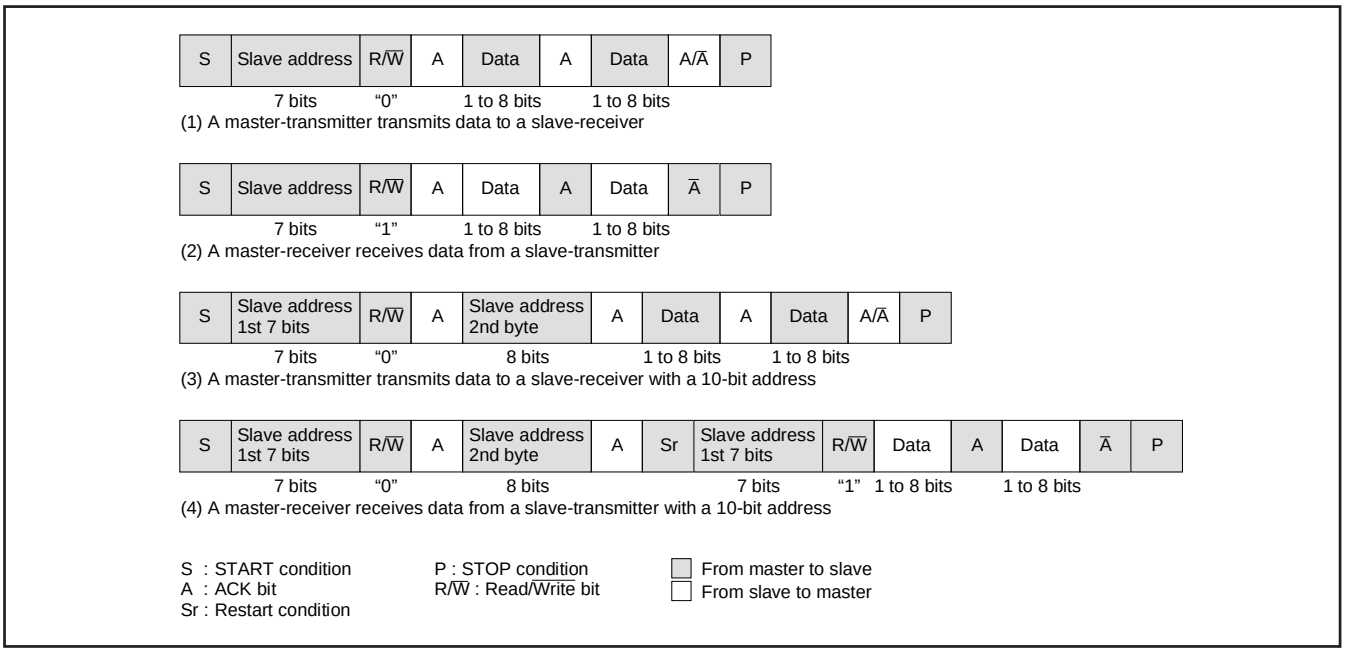

Fig. 8.6.13 Address Data Communication Format

8.6.12 Precautions when using multi-master I²C-BUS interface

(1) Read-modify-write instruction

Precautions for executing the read-modify-write instructions, such as SEB, and CLB, is for each register of the multi-master I²C-BUS interface are described below.

•I²C data shift register (S0)
When executing the read-modify-write instruction for this register during transfer, data may become an arbitrary value.

•I²C address register (S0D)
When the read-modify-write instruction is executed for this register at detection of the STOP condition, data may become an arbitrary value. Because hardware changes the read/write bit (RBW) at the above timing.

•I²C status register (S1)
Do not execute the read-modify-write instruction for this register because all bits of this register are changed by hardware.

•I²C control register (S1D)
When the read-modify-write instruction is executed for this register at detection of the START condition or at completion of the byte transfer, data may become an arbitrary value because hardware changes the bit counter (BC0–BC2) at the above timing.

•I²C clock control register (S2)
The read-modify-write instruction can be executed for this register.

(2) START condition generating procedure using multi-master

① Procedure example (The necessary conditions for the procedure are described in ② to ⑤ below).

```
                •
                •
        LDA     —               (Take out slave address value)
        SEI                     (Interrupt disabled)
        BBS  5,S1,BUSBUSY       (BB flag confirmation and branch pro
                                cess)
BUSFREE:
        STA  S0                 (Write slave address value)
        LDM #$F0, S1            (Trigger START condition generation)
        CLI                     (Interrupt enabled)
                •
                •
BUSBUSY:
        CLI                     (Interrupt enabled)
                •
                •
```

② Use "STA," "STX" or "STY" of the zero page addressing instruction for writing the slave address value to the I²C data shift register.

③ Use "LDM" instruction for setting trigger of START condition generation.

④ Write the slave address value of ② and set trigger of START condition generation as in ③ continuously, as shown in the procedure example.

⑤ Disable interrupts during the following three process steps:
• BB flag confirmation
• Write slave address value
• Trigger of START condition generation
When the condition of the BB flag is bus busy, enable interrupts immediately.

(3) RESTART condition generation procedure

① Procedure example (The necessary conditions for the procedure are described in ② to ⑥ below.)

Execute the following procedure when the PIN bit is “0.”

```
                •
                •
LDM   #$00, S1     (Select slave receive mode)
LDA   —            (Take out slave address value)
SEI                (Interrupt disabled)
STA   S0           (Write slave address value)
LDM   #$F0, S1     (Trigger RESTART condition generation)
CLI                (Interrupt enabled)
                •
                •
```

② Select the slave receive mode when the PIN bit is “0.” Do not write “1” to the PIN bit. Neither “0” nor “1” is specified for the writing to the BB bit.
The TRX bit becomes “0” and the SDA pin is released.

③ The SCL pin is released by writing the slave address value to the I^2C data shift register. Use “STA,” “STX” or “STY” of the zero page addressing instruction for writing.

④ Use “LDM” instruction for setting trigger of RESTART condition generation.

⑤ Write the slave address value of ③ and set trigger of RESTART condition generation of ④ continuously, as shown in the procedure example.

⑥ Disable interrupts during the following two process steps:
- Write slave address value
- Trigger RESTART condition generation

(4) STOP condition generation procedure

① Procedure example (The necessary conditions for the procedure are described in ② to ④ below.)

```
                •
                •
SEI                (Interrupt disabled)
LDM   #$C0, S1     (Select master transmit mode)
NOP                (Set NOP)
LDM   #$D0, S1     (Trigger STOP condition generation)
CLI                (Interrupt enabled)
                •
                •
```

② Write “0” to the PIN bit when master transmit mode is selected.

③ Execute “NOP” instruction after master transmit mode is set. Also, set trigger of STOP condition generation within 10 cycles after selecting the master trasmit mode.

④ Disable interrupts during the following two process steps:
- Select master transmit mode
- Trigger STOP condition generation

(5) Writing to I^2C status register

Do not execute an instruction to set the PIN bit to “1” from “0” and an instruction to set the MST and TRX bits to “0” from “1” simultaneously as it may cause the SCL pin the SDA pin to be released after about one machine cycle. Also, do not execute an instruction to set the MST and TRX bits to “0” from “1” when the PIN bit is “1,” as it may cause the same problem.

(6) Process after STOP condition generation

Do not write data in the I^2C data shift register S0 and the I^2C status register S1 until the bus busy flag BB becomes “0” after generating the STOP condition in the master mode. Doing so may cause the STOP condition waveform from being generated normally. Reading the registers does not cause the same problem.

8.7 PWM OUTPUT FUNCTION

This microcomputer is equipped with five 8-bit PWMs (PWM0–PWM4). PWM0–PWM4 have the same circuit structure, an 8-bit resolution with minimum resolution bit width of 4 μs (for f(XIN) = 8 MHz) and repeat period of 1024 μs (for f(XIN) = 8 MHz).
f(XIN): 8.95 MHz at FSCIN = 3.58 MHz
Min. resolution bit width: 4 μs × 8/8.95 = 3.58 μs
Repeat period:1024 μs × 8/8.95 = 915 μs
f(XIN): 8.86 MHz at FSCIN = 4.43 MHz
Min. resolution bit width: 4 μs × 8/8.86 = 3.61 μs
Repeat period: 1024 μs × 8/8.86 = 925 μs.
Figure 8.7.1 shows the PWM block diagram. The PWM timing generating circuit applies individual control signals to PWM0–PWM4 using f(XIN) divided by 2 as a reference signal.

8.7.1 Data Setting

When outputting PWM0–PWM4, set 8-bit output data to the PWMi register (i means 0 to 4; addresses 0200_{16} to 0204_{16}).

8.7.2 Transmitting Data from Register to PWM circuit

Data transfer from the 8-bit PWM register to the 8-bit PWM circuit is executed when writing data to the register.
The signal output from the 8-bit PWM output pin corresponds to the contents of this register.

8.7.3 Operating of 8-bit PWM

The following explains the PWM operation.
First, set bit 0 of PWM mode register 1 (address 0208_{16}) to “0” (at reset, bit 0 is already set to “0” automatically), so that the PWM count source is supplied.
PWM0–PWM4 are also used as pins $P0_0$–$P0_4$. Set the corresponding bits of the port P0 direction register to “1” (output mode). And select each output polarity by bit 3 of PWM mode register 1 (address 0208_{16}). Then, set bits 4 to 0 of PWM mode register 2 (address 0209_{16}) to “1” (PWM output).
The PWM waveform is output from the PWM output pins by setting these registers.
Figure 8.7.2 shows the 8-bit PWM timing. One cycle (T) is composed of 256 (2^8) segments. 8 kinds of pulses, relative to the weight of each bit (bits 0 to 7), are output inside the circuit during 1 cycle. Refer to Figure 8.7.2 (a). The 8-bit PWM outputs a waveform which is the logical sum (OR) of pulses corresponding to the contents of bits 0 to 7 of the 8-bit PWM register. Several examples are shown in Figure 8.7.2 (b). 256 kinds of output (HIGH area: 0/256 to 255/256) are selected by changing the contents of the PWM register. An entirely HIGH section cannot be output, i.e. 256/256.

8.7.4 Output after Reset

At reset, the output of ports $P0_0$–$P0_4$ is in the high-impedance state, and the contents of the PWM register and the PWM circuit are undefined. Note that after reset, the PWM output is undefined until setting the PWM register.

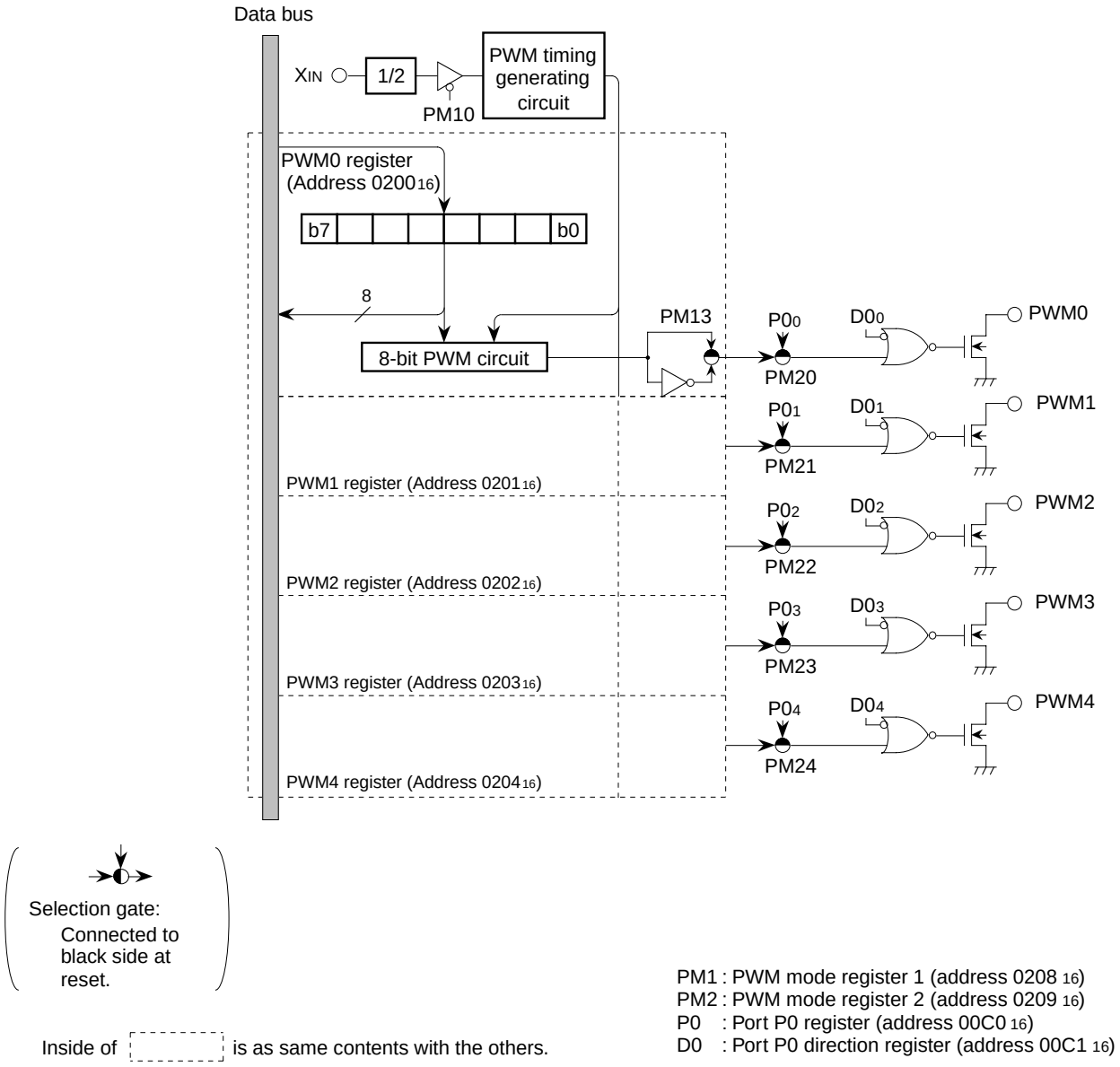

Fig. 8.7.1 PWM Block Diagram

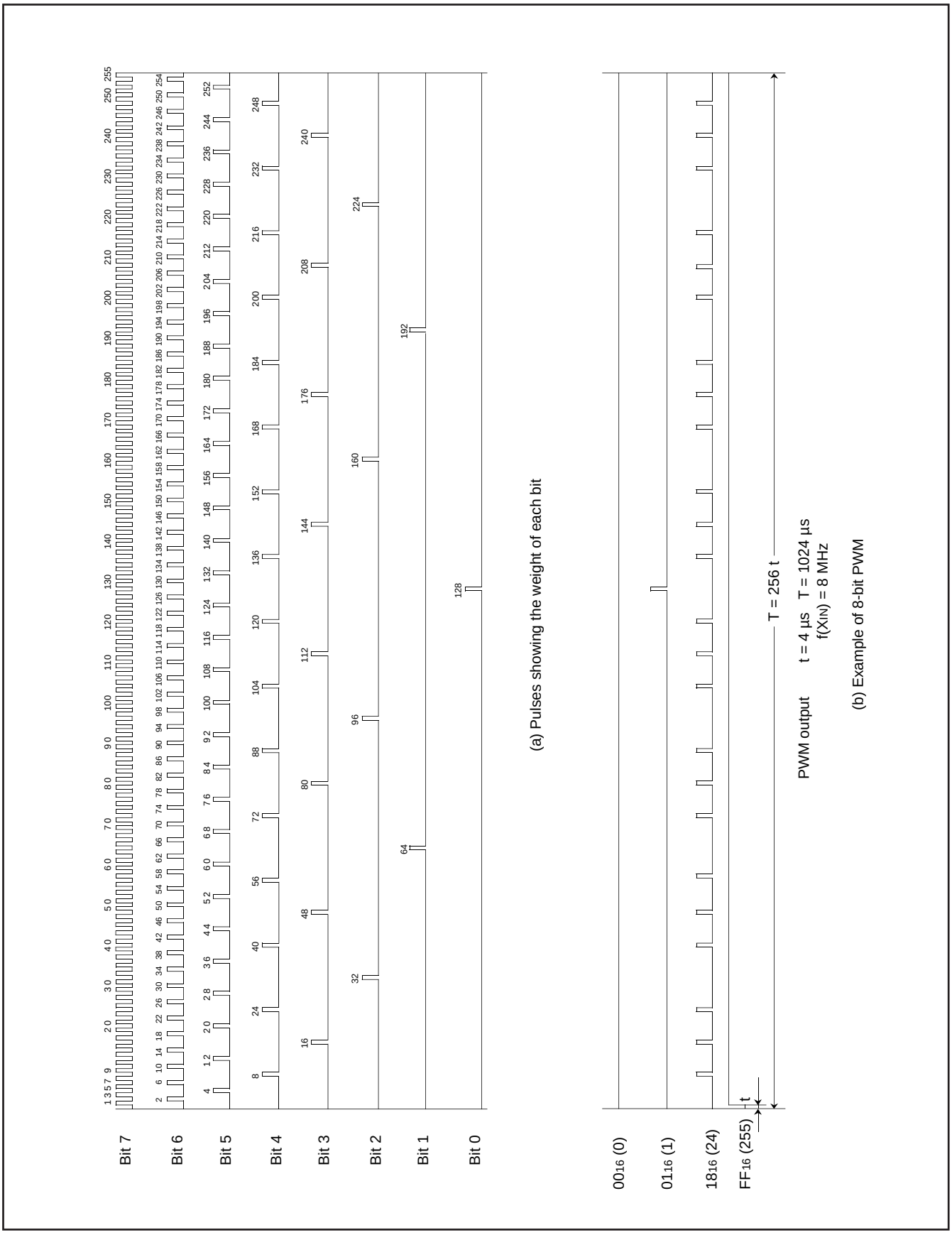

Fig. 8.7.2 PWM Timing

PWM Mode Register 1

b7 b6 b5 b4 b3 b2 b1 b0

PWM mode register 1 (PM1) [Address 0208$_{16}$]

B	Name	Functions	After reset	R	W
0	PWM counts source selection bit (PM10)	0 : Count source supply 1 : Count source stop	0	R	W
1, 2	Nothing is assigned. These bits are write disable bits. When these bits are read out, the values are “0.”		Indeterminate	R	—
3	PWM output polarity selection bit (PM13)	0 : Positive polarity 1 : Negative polarity	0	R	W
4 to 7	Nothing is assigned. These bits are write disable bits. When these bits are read out, the values are “0.”		Indeterminate	R	—

Fig. 8.7.3 PWM Mode Register 1

PWM Mode Register 2

b7 b6 b5 b4 b3 b2 b1 b0

0 0 0

PWM mode register 2 (PM2) [Address 0209$_{16}$]

B	Name	Functions	After reset	R	W
0	$P0_0$/PWM0 output selection bit (PM20)	0 : $P0_0$ output 1 : PWM0 output	0	R	W
1	$P0_1$/PWM1 output selection bit (PM21)	0 : $P0_1$ output 1 : PWM1 output	0	R	W
2	$P0_2$/PWM2 output selection bit (PM22)	0 : $P0_2$ output 1 : PWM2 output	0	R	W
3	$P0_3$/PWM3 output selection bit (PM23)	0 : $P0_3$ output 1 : PWM3 output	0	R	W
4	$P0_4$/PWM4 output selection bit (PM24)	0 : $P0_4$ output 1 : PWM4 output	0	R	W
5 to 7	Fix these bits to “0.”		0	R	W

Fig. 8.7.4 PWM Mode Register 2

8.8 A-D COMPARATOR

The A-D comparator consists of a 7-bit D-A converter and a comparator. The A-D comparator block diagram is shown in Figure 8.8.1. The reference voltage "V_{ref}" for D-A conversion is set by bits 0 to 6 of A-D control register 2 (address $00ED_{16}$).

The comparison result of the analog input voltage and the reference voltage "V_{ref}" is stored in bit 4 of A-D control register 1 (address $00EC_{16}$).

For A-D comparison, set "0" to corresponding bits of the direction register to use ports as analog input pins. Write the data to select analog input pins for bits 0 to 2 of A-D control register 1 and write the digital value corresponding to V_{ref} to be compared to bits 0 to 4 of A-D control register 2. The voltage comparison is started by writing to A-D control register 2, and it is completed after 16 machine cycles (NOP instruction × 8).

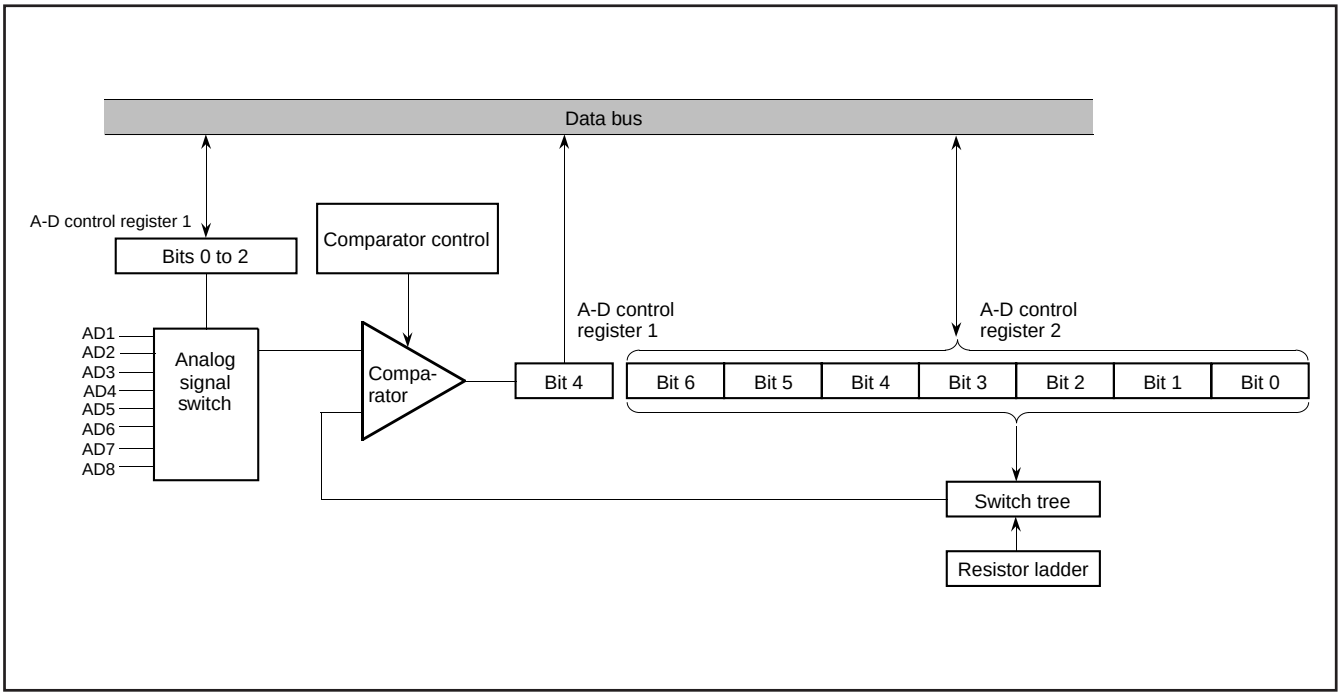

Fig. 8.8.1 A-D Comparator Block Diagram

A-D Control Register 1

b7 b6 b5 b4 b3 b2 b1 b0

A-D control register 1 (AD1) [Address 00EC16]

B	Name	Functions	After reset	R	W
0 to 2	Analog input pin selection bits (ADC10 to ADC12)	b2 b1 b0 0 0 0 : AD1 0 0 1 : AD2 0 1 0 : AD3 0 1 1 : AD4 1 0 0 : AD5 1 0 1 : AD6 1 1 0 : AD7 1 1 1 : AD8	0	R	W
3	This bit is a write disable bit. When this bit is read out, the value is “0.”		0	R	—
4	Storage bit of comparison result (ADC14)	0: Input voltage < reference voltage 1: Input voltage > reference voltage	Indeterminate	R	—
5 to 7	Nothing is assigned. These bits are write disable bits. When these bits are read out, the values are “0.”		0	R	—

Fig. 8.8.2 A-D Control Register 1

A-D Control Register 2

b7 b6 b5 b4 b3 b2 b1 b0

A-D control register 2 (AD2) [Address 00ED16]

B	Name	Functions	After reset	R	W
0 to 6	D-A converter set bits (ADC20 to ADC25)	b6 b5 b4 b3 b2 b1 b0 0 0 0 0 0 0 0 : 1/256Vcc 0 0 0 0 0 0 1 : 3/256Vcc 0 0 0 0 0 1 0 : 5/256Vcc ⋮ 1 1 1 1 1 0 1 : 251/256Vcc 1 1 1 1 1 1 0 : 253/256Vcc 1 1 1 1 1 1 1 : 255/256Vcc	0	R	W
7	Nothing is assigned. This bit is a write disable bit. When these bits are reed out, the values are “ 0.”		0	R	—

Fig. 8.8.3 A-D Control Register 2

8.9 ROM CORRECTION FUNCTION

This can correct program data in the ROM. Up to 2 addresses can be corrected; a program for correction is stored in the ROM correction vector in the RAM as the top address. There are 2 vectors for ROM correction:

Vector 1 : address 0300_{16}
Vector 2 : address 0320_{16}

Set the address of the ROM data to be corrected into the ROM correction address register. When the value of the counter matches the ROM data address in the top address of the ROM correction vector, the main program branches to the correction program stored in the ROM memory. To return from the correction program to the main program, the op code and operand of the JMP instruction (total of 3 bytes) are necessary at the end of the correction program.
The ROM correction function is controlled by the ROM correction enable register.

Notes 1: Specify the first address (op code address) of each instruction as the ROM correction address.
2: Use the JMP instruction (total of 3 bytes) to return from the correction program to the main program.
3: Do not set the same ROM correction address to both vectors 1 and 2.

ROM correction address 1 (high-order)	$020A_{16}$
ROM correction address 1 (low-order)	$020B_{16}$
ROM correction address 2 (high-order)	$020C_{16}$
ROM correction address 2 (low-order)	$020D_{16}$

Fig. 8.9.1 ROM Correction Address Registers

ROM Correction Enable Register

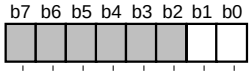

ROM correction enable register (RCR) [Address $020E_{16}$]

B	Name	Functions	After reset	R	W
0	Vector 1 enable bit (RC0)	0: Disabled 1: Enabled	0	R	W
1	Vector 2 enable bit (RC1)	0: Disabled 1: Enabled	0	R	W
2 to 7	Nothing is assigned. These bits are write disable bits. When these bits are read out, the values are “0.”		0	R	—

Fig. 8.9.2 ROM Correction Enable Register

8.10 DATA SLICER

This microcomputer includes the data slicer function for the closed caption decoder (referred to as the CCD). This function takes out the caption data superimposed in the vertical blanking interval of a composite video signal. A composite video signal, which makes the sync chip's polarity negative, is input to the CVIN pin.

When the data slicer function is not used, the data slicer circuit and the timing signal generating circuit can be cut off by setting bit 0 of data slicer control register 1 (address 00E016) to "0." These settings support the low-power dissipation.

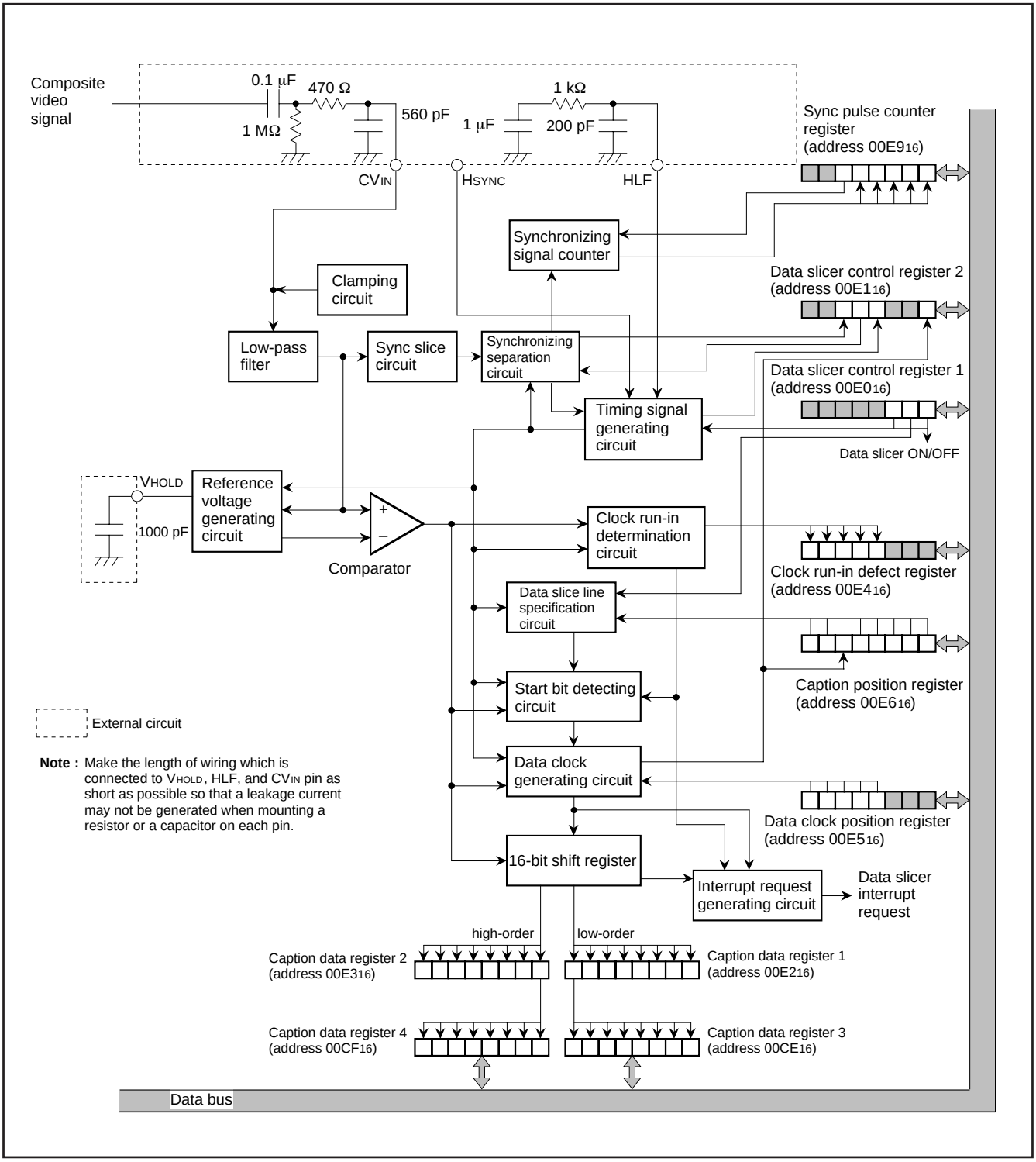

Note : Make the length of wiring which is connected to VHOLD, HLF, and CVIN pin as short as possible so that a leakage current may not be generated when mounting a resistor or a capacitor on each pin.

Fig. 8.10.1 Data Slicer Block Diagram

8.10.1 Notes When not Using Data Slicer

When bit 0 of data slicer control register 1 (address 00E0$_{16}$) is “0,” terminate the pins as shown in Figure 8.10.2.

<When data slicer circuit and timing signal generating circuit are in OFF state>

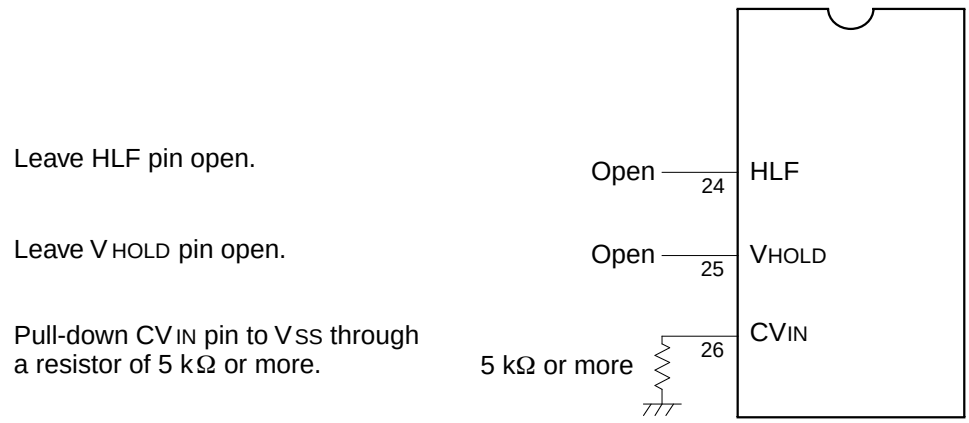

Fig. 8.10.2 Termination of Data Slicer Input/Output Pins when Data Slicer Circuit and Timing Generating Circuit are in OFF State

When both bits 0 and 2 of data slicer control register 1 (address 00E0$_{16}$) are “1,” terminate the pins as shown in Figure 8.10.3.

<When using a reference clock generated in timing signal generating circuit as OSD clock>

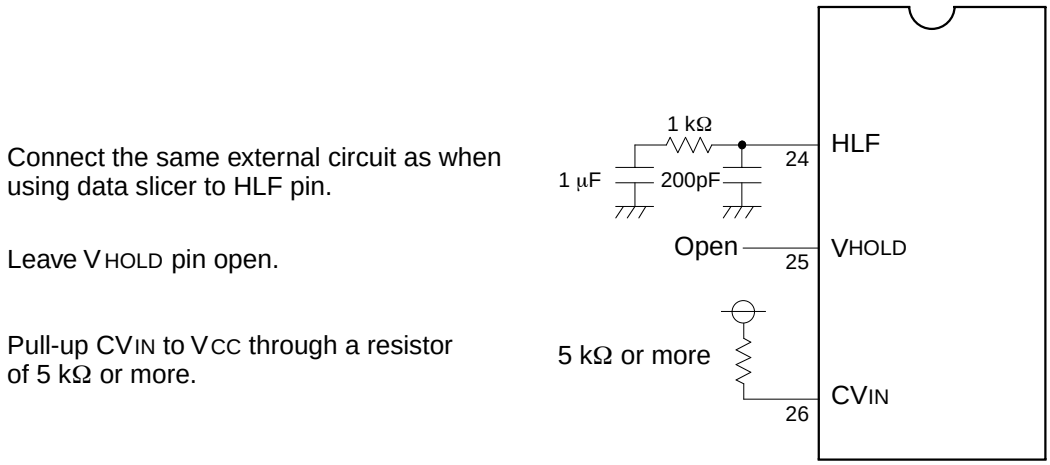

Fig. 8.10.3 Termination of Data Slicer Input/Output Pins when Timing Signal Generating Circuit Is in ON State

Figures 8.10.4 and 8.10.5 the data slicer control registers.

Data Slicer Control Register 1

b7	b6	b5	b4	b3	b2	b1	b0
0	1	1	0	0			

Data slicer control register 1(DSC1) [Address 00E0$_{16}$]

B	Name	Functions	After reset	R	W
0	Data slicer and timing signal generating circuit control bit (DSC10)	0: Stopped 1: Operating	0	R	W
1	Selection bit of data slice reference voltage generating field (DSC11)	0: F2 1: F1	0	R	W
2	Reference clock source selection bit (DSC12)	0: Video signal 1: HSYNC signal	0	R	W
3, 4	Fix these bits to “0.”		0	R	W
5, 6	Fix these bits to “1.”		0	R	W
7	Fix this bit to “0.”		0	R	W

Definition of fields 1 (F1) and 2 (F2)

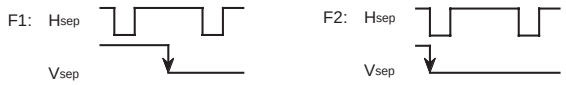

Fig. 8.10.4 Data Slicer Control Register 1

Data Slicer Control Register 2

b7	b6	b5	b4	b3	b2	b1	b0
	0					1	

Data slicer control register 2 (DSC2) [Address 00E1$_{16}$]

B	Name	Functions	After reset	R	W
1	Caption data latch completion flag 1 (DSC20)	0: Data is not latched yet and a clock-run-in is not determined. 1: Data is latched and a clock-run-in is determined.	Indeterminate	R	—
1	Fix this bit to “1.”		0	R	W
2	Test bit	Read-only	Indeterminate	R	—
0	Field determination flag(DSC23)	0: F2 1: F1	Indeterminate	R	—
4	Vertical synchronous signal (V_{sep}) generating method selection bit (DSC24)	0: Method (1) 1: Method (2)	0	R	W
5	V-pulse shape determination flag (DSC25)	0: Match 1: Mismatch	Indeterminate	R	—
6	Fix this bit to “0.”		0	R	W
7	Test bit	Read-only	Indeterminate	R	—

Definition of fields 1 (F1) and 2 (F2)

Fig. 8.10.5 Data Slicer Control Register 2

8.10.2 Clamping Circuit and Low-pass Filter

The clamp circuit clamps the sync chip part of the composite video signal input from the CV_{IN} pin. The low-pass filter attenuates the noise of the clamped composite video signal. The CV_{IN} pin to which composite video signal is input requires an external capacitor (0.1 μF) coupling. Pull down the CV_{IN} pin with a resistor of hundreds of kilo-ohms to 1 MΩ. In addition, we recommend installing a simple low-pass filter externally, using a resistor and a capacitor at the CV_{IN} pin (refer to Figure 8.10.1).

8.10.3 Sync Slice Circuit

This circuit takes out a composite sync signal from the output signal of the low-pass filter.

8.10.4 Synchronous Signal Separation Circuit

This circuit separates a horizontal synchronous signal and a vertical synchronous signal from the composite sync signal taken out in the sync slice circuit.

(1) Horizontal Synchronous Signal (H_{sep})

A one-shot horizontal synchronizing signal Hsep is generated at the falling edge of the composite sync signal.

(2) Vertical Synchronous Signal (V_{sep})

As a V_{sep} signal generating method, it is possible to select one of the following 2 methods by using bit 4 of data slicer control register 2 (address $00E1_{16}$).

- •Method 1 The LOW level width of the composite sync signal is measured. If this width exceeds a certain time, a V_{sep} signal is generated in synchronization with the rising of the timing signal immediately after this LOW level.
- •Method 2 The LOW level width of the composite sync signal is measured. If this width exceeds a certain time, it is detected whether a falling of the composite sync signal exits or not in the LOW level period of the timing signal immediately after this LOW level. If a falling exists, a V_{sep} signal is generated in synchronization with the rising of the timing signal (refer to Figure 8.10.6).

Figure 8.10.6 shows a V_{sep} generating timing. The timing signal shown in the figure is generated from the reference clock which the timing generating circuit outputs.

Reading bit 5 of data slicer control register 2 permits determinating the shape of the V-pulse portion of the composite sync signal. As shown in Figure 8.10.7, when the A level matches the B level, this bit is “0.” In the case of a mismatch, the bit is “1.”

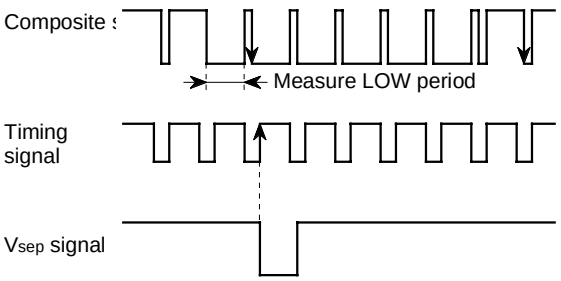

A V_{sep} signal is generated at a rising of the timing signal immediately after the LOW level width of the composite sync signal exceeds a certain time.

Fig. 8.10.6 Vsep Generating Timing (method 2)

8.10.5 Timing Signal Generating Circuit

This circuit generates a reference clock which is 832 times as large as the horizontal synchronous signal frequency. It also generates various timing signals on the basis of the reference clock, horizontal synchronous signal and vertical synchronizing signal. The circuit operates by setting bit 0 of data slicer control register 1 (address $00E0_{16}$) to “1.”

The reference clock can be used as a display clock for the OSD function in addition to the data slicer. The HSYNC signal can be used as a count source instead of the composite sync signal. However, when the HSYNC signal is selected, the data slicer cannot be used. A count source of the reference clock can be selected by bit 2 of data slicer control register 1 (address $00E0_{16}$).

For pins HLF, connect a resistor and a capacitor as shown in Figure 8.10.1. Make the length of wiring which is connected to these pins as short as possible to prevent a leakage current from being generated.

Note: It takes a few tens of milliseconds until the reference clock becomes stable after the data slicer and the timing signal generating circuit are started. In this period, various timing signals, H_{sep} signals and V_{sep} signals become unstable. For this reason, take stabilization time into consideration when programming.

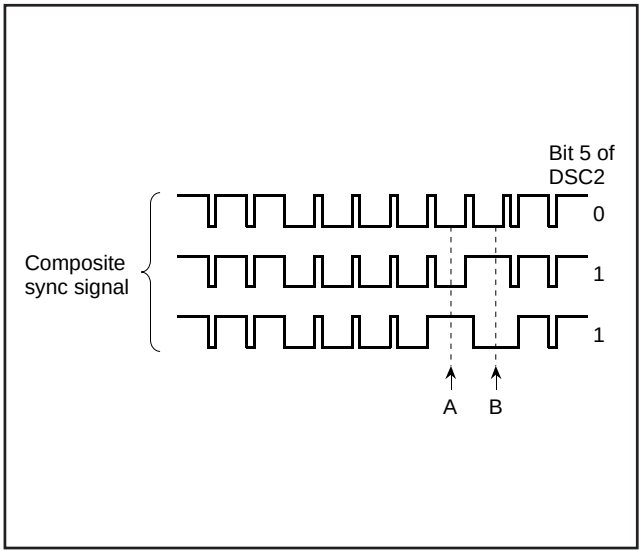

Fig. 8.10.7 Determination of V-pulse Waveform

8.10.6 Data Slice Line Specification Circuit

(1) Specification of data slice line

This circuit determines the lines on to which caption data is superimposed. Data can be sliced for line 21 and one arbitrary line in both field (2 lines total per field). The caption position register (address $00E6_{16}$) is used for each setting (refer to Table 8.10.1).

The counter is reset at the falling edge of V_{sep} and is incremented by 1 every H_{sep} pulse. When the counter value matches the value specified by bits 4 to 0 of the caption position register, this H_{sep} is sliced.

The values of "00_{16}" to "$1F_{16}$" can be set in the caption position register (when setting only one arbitrary line). Figure 8.10.8 shows the signals in the vertical blanking interval. Figure 8.10.9 shows the structure of the caption position register.

(2) Specification of line to set slice voltage

Table 8.10.1 shows which field and line generates the reference slice voltage for the clock run-in pulse of each line. The field to generate slice voltage is specified by bit 1 of data slicer control register 1. The line to generate slice voltage for one field is specified by bits 6 and 7 of the caption position register (refer to Table 8.10.1).

(3) Field determination

The field determination flag can be read out by bit 3 of data slicer control register 2. This flag charges at the falling edge of V_{sep}.

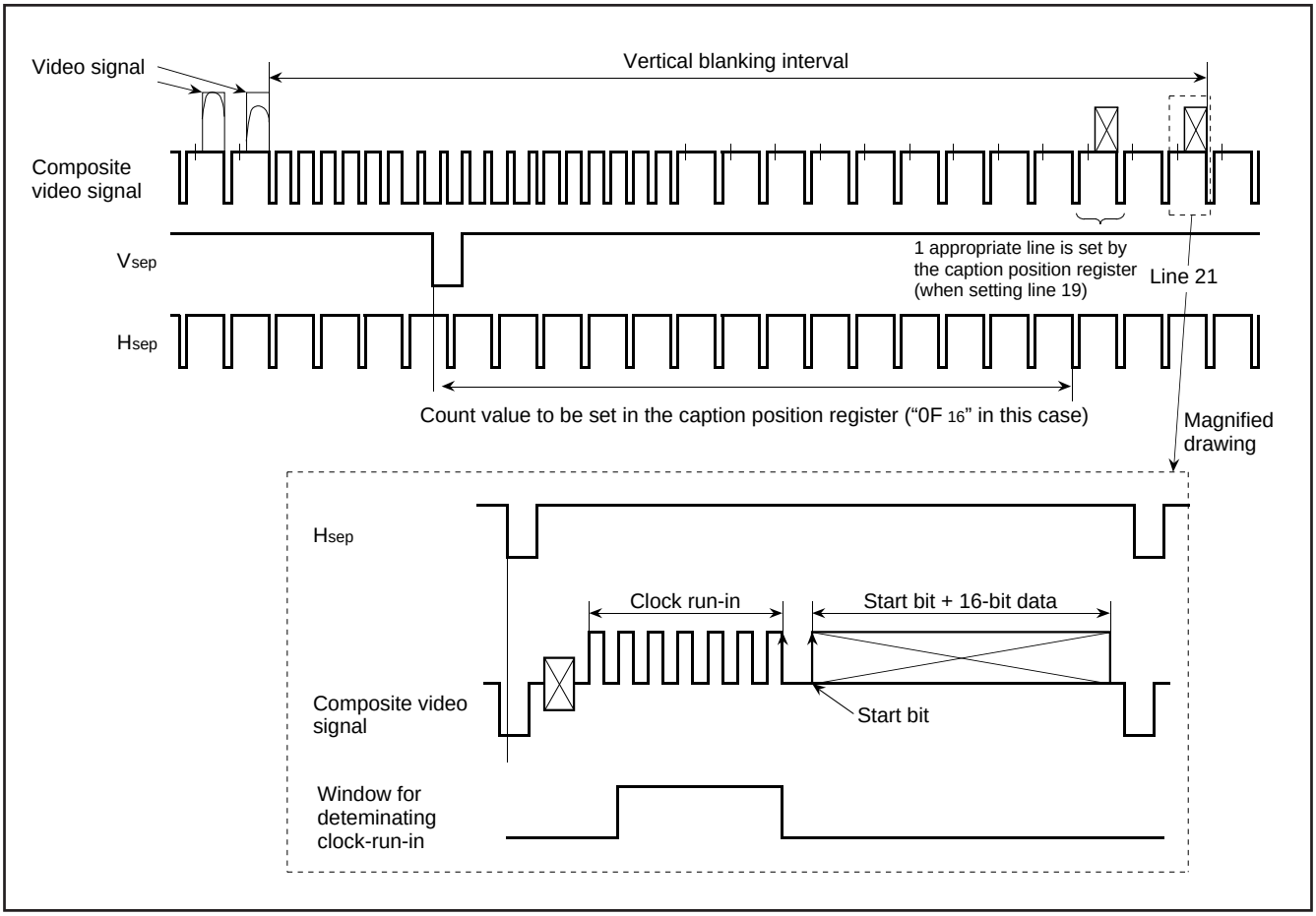

Fig. 8.10.8 Signals in Vertical Blanking Interval

Caption Position Register

b7	b6	b5	b4	b3	b2	b1	b0

Caption Position Register (CPS) [Address $00E6_{16}$]

B	Name	Functions	After reset	R	W
0 to 4	Caption position bits(CPS0 to CPS4)		0	R	W
5	Caption data latch completion flag 2 (CPS5)	0: Data is not latched yet and a clock-run-in is not determined. 1: Data is latched and a clock-run-in is determined.	Indeterminate	R	—
6, 7	Slice line mode specification bits (in 1 field) (CPS6, CPS7)	Refer to the corresponding Table (Table 8.10.1).	0	R	W

Fig. 8.10.9 Caption Position Register

Table 8.10.1 Specification of Data Slice Line

CPS		Field and Line to Be Sliced Data	Field and Line to Generate Slice Voltage
b7	b6		
0	0	• Both fields of F1 and F2 • Line 21 and a line specified by bits 4 to 0 of CPS (total 2 lines) (See note 2)	• Field specified by bit 1 of DSC1 • Line 21 (total 1 line)
0	1	• Both fields of F1 and F2 • A line specified by bits 4 to 0 of CPS (total 1 line) (See note 3)	• Field specified by bit 1 of DSC1 • A line specified by bits 4 to 0 of CPS (total 1 line) (See note 3)
1	0	• Both fields of F1 and F2 • Line 21 (total 1 line)	• Field specified by bit 1 of DSC1 • Line 21 (total 1 line)
1	1	• Both fields of F1 and F2 • Line 21 and a line specified by bits 4 to 0 of CPS (total 2 lines) (See note 2)	• Field specified by bit 1 of DSC1 • Line 21 and a line specified by bits 4 to 0 of CPS (total 2 lines) (See note 2)

Notes 1: DSC1 is data slicer control register 1.
CPS is caption position register.
2: Set "00_{16}" to "10_{16}" to bits 4 to 0 of CPS.
3: Set "00_{16}" to "$1F_{16}$" to bits 4 to 0 of CPS.

8.10.7 Reference Voltage Generating Circuit and Comparator

The composite video signal clamped by the clamping circuit is input to the reference voltage generating circuit and the comparator.

(1) Reference voltage generating circuit

This circuit generates a reference voltage (slice voltage) by using the amplitude of the clock run-in pulse in the line specified by the data slice line specification circuit. Connect a capacitor between the VHOLD pin and the VSS pin, and make the length of wiring as short as possible to prevent a leakage current from being generated.

(2) Comparator

The comparator compares the voltage of the composite video signal with the voltage (reference voltage) generated in the reference voltage generating circuit, and converts the composite video signal into a digital value.

8.10.8 Start Bit Detecting Circuit

This circuit detects a start bit at the line decided in the data slice line specification circuit.

The detection of a start bit is as follows:.

① A sampling clock is generated by dividing the reference clock output by the timing signal.

② A clock run-in pulse is detected by the sampling clock.

③ After detection of the pulse, a start bit pattern is detected from the comparator output.

8.10.9 Clock Run-in Determination Circuit

This circuit determinates clock run-in by counting the number of pulses in a window of the composite video signal.

The reference clock count value in one pulse cycle is stored in bits 3 to 7 of the clock run-in detect register (address 00E4$_{16}$). Read out these bits after the occurrence of a data slicer interrupt (refer to “8.10.12 Interrupt Request Generating Circuit”).

Figure 8.10.10 shows the structure of the clock run-in detect register.

Clock Run-in Detect Register

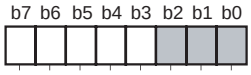

Clock run-in detect register (CRD) [Address 00E4$_{16}$]

B	Name	Functions	After reset	R	W
0 to 2	Test bits	Read-only	0	R	—
3 to 7	Clock run-in detection bit(CRD3 to CRD7)	Number of reference clocks to be counted in one clock run-in pulse period.	0	R	—

Fig. 8.10.10 Clock Run-in Detect Register

8.10.10 Data Clock Generating Circuit

This circuit generates a data clock synchronized with the start bit detected in the start bit detecting circuit. The data clock stores caption data to the 16-bit shift register. When the 16-bit data has been stored and the clock run-in determination circuit determines clock run-in, the caption data latch completion flag is set. This flag is reset at a falling edge of the vertical synchronous signal (V_{sep}).

Data Clock Position Register

b7	b6	b5	b4	b3	b2	b1	b0
					0	1	0

Data clock position register (DPS) [Address $00E5_{16}$]

B	Name	Functions	After reset	R	W
0	Fix this bit to “0.”		1	R	W
1	Fix this bit to “1.”		0	R	W
2	Fix this bit to “0.”		0	R	W
3	Data clock position set bits (DPS3 to DPS7)		1	R	W
4 to 7			0		

Fig. 8.10.11 Data Clock Position Register

8.10.11 16-bit Shift Register

The caption data converted into a digital value by the comparator is stored into the 16-bit shift register in synchronization with the data clock. The contents of the high-order 8 bits of the stored caption data can be obtained by reading out data register 2 (address $00E3_{16}$) and data register 4 (address $00CF_{16}$). The contents of the low-order 8 bits can be obtained by reading out data register 1 (address $00E2_{16}$) and data register 3 (address $00CE_{16}$), respectively. These registers are reset to "0" at a falling edge of V_{sep}. Read out data registers 1 and 2 after the occurrence of a data slicer interrupt (refer to "8.10.12 Interrupt Request Generating Circuit").

8.10.12 Interrupt Request Generating Circuit

The interrupt requests as shown in Table 8.10.3 are generated by combination of the following bits; bits 6 and 7 of the caption position register (address $00E6_{16}$). Read out the contents of data registers 1 to 4 and the contents of bits 3 to 7 of the clock run-in detect register after the occurrence of a data slicer interrupt request.

Table 8.10.2 Contents of Caption Data Latch Completion Flag and 16-bit Shift Register

Slice Line Specification Mode		Contents of Caption Data Latch Completion Flag		Contents of 16-bit Shift Register	
CPS		Completion Flag 1 (bit 0 of DSC2)	Completion Flag 2 (bit 5 of CPS)	Caption Data Registers 1, 2	Caption Data Registers 3, 4
bit 7	bit 6				
0	0	Line 21	A line specified by bits 4 to 0 of CPS	16-bit data of line 21	16-bit data of a line specified by bits 4 to 0 of CPS
0	1	A line specified by bits 4 to 0 of CPS	Invalid	16-bit data of a line specified by bits 4 to 0 of CPS	Invalid
1	0	Line 21	Invalid	16-bit data of line 21	Invalid
1	1	Line 21	A line specified by bits 4 to 0 of CPS	16-bit data of line 21	16-bit data of a line specified by bits 4 to 0 of CPS

CPS: Caption position register
DSC2: Data slicer control register 2

Table 8.10.3 Occurence Sources of Interrupt Request

Caption position register		Occurence Souces of Interrupt Request at End of Data Slice Line
b7	b6	
0	0	After slicing line 21
	1	After a line specified by bits 4 to 0 of CPS
1	0	After slicing line 21
	1	After slicing line 21

8.10.13 Synchronous Signal Counter

The synchronous signal counter counts the composite sync signal taken out from a video signal in the data slicer circuit or the vertical synchronous signal V_{sep} as a count source.

The count value in a certain time (T time) generated by $f(X_{IN})/2^{13}$ or $f(X_{IN})/2^{13}$ is stored into the 5-bit latch. Accordingly, the latch value changes in the cycle of T time. When the count value exceeds "$1F_{16}$," "$1F_{16}$" is stored into the latch.

The latch value can be obtained by reading out the sync pulse counter register (address $00E9_{16}$). A count source is selected by bit 5 of the sync pulse counter register.

The synchronous signal counter is used when bit 0 of PWM mode register 1 (address 0208_{16}) is set to "0."

Figure 8.10.12 shows the structure of the sync pulse counter and Figure 8.10.13 shows the synchronous signal counter block diagram.

Sync Pulse Counter Register

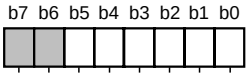

Sync pulse counter register (HC) [Address $00E9_{16}$]

B	Name	Functions	After reset	R	W
0 to 4	Count value (HC0 to HC4)		0	R	—
5	Count source (HC5)	0: H_{SYNC} signal 1: Composite sync signal	0	R	W
6, 7	Nothing is assigned. These bits are write disable bits. When these bits are read out, the values are "0."		0	R	—

Fig. 8.10.12 Sync Pulse Counter Register

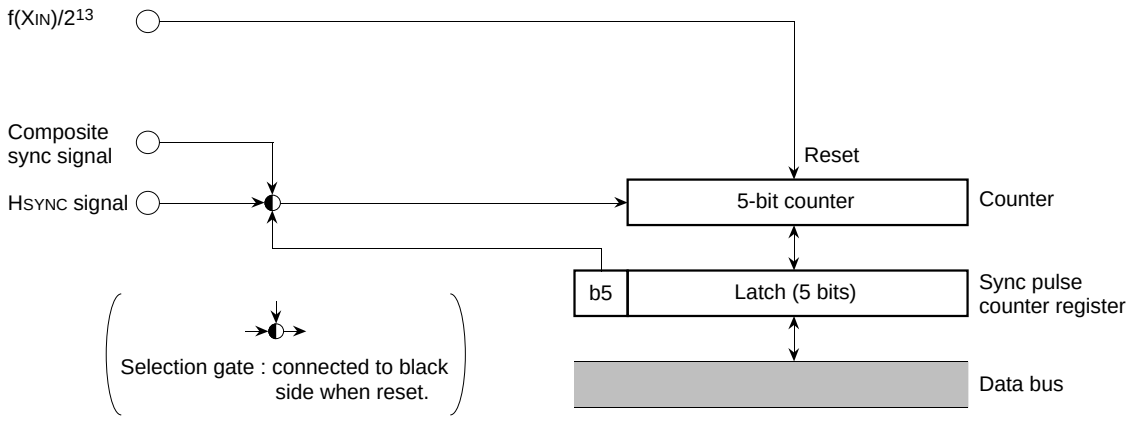

Fig. 8.10.13 Synchronous Signal Counter Block Diagram

8.11 OSD FUNCTIONS

Table 8.11.1 outlines the OSD functions.
This microcomputer incorporates an OSD circuit of 32 characters × 2 lines. There are also 2 display modes which are selected in block units. The display modes are selected by bits 0 and 1 of block control register i (i = 1 and 2).
The features of each mode are described below.

Table 8.11.1 Features of Each Display Mode

Parameter		Display mode	
		CC mode (Closed caption mode)	OSD mode (Border OFF) (On-screen display mode)
Number of display characters		32 characters × 2 lines	
Dot structure		16 × 26 dots (Character display area : 16 × 20 dots)	16 × 20 dots
Kinds of characters		254 kinds	
Kinds of character sizes		1 kinds	8 kinds
	Pre-divide ratio (See note)	× 2 (fixed)	× 2, × 3
	Dot size	1Tc × 1/2H	1Tc × 1/2H, 1Tc × 1H, 2Tc × 2H, 3Tc × 3H
Attribute		Smooth italic, under line, flash	Border (black)
Character font coloring		1 screen : 8 kinds (per character unit)	
Character background coloring		———	1 screen : 8 kinds (per character unit)
OSD output		R, G, B	
Raster coloring		Possible (per character unit)	
Function		Auto solid space function Window function	———
Display position		Horizontal: 128 levels, Vertical: 512 levels	
Display expansion (multiline display)		Possible	

Notes 1: The divide ratio of the frequency divider (the pre-divide circuit) is referred as “pre-divide ratio” hereafter.
2: The character size is specified with dot size and pre-divide ratio (refer to 8.11.2 Dot Size).

The OSD circuit has an extended display mode. This mode allows multiple lines (3 lines or more) to be displayed on the screen by interrupting the display each time one line is displayed and rewriting data in the block for which display has been terminated by software. Figure 8.11.1 shows the configuration of an OSD character. Figure 8.11.2 shows the block diagram of the OSD circuit. Figure 8.11.3 shows the OSD control register. Figure 8.11.4 shows block control register i.

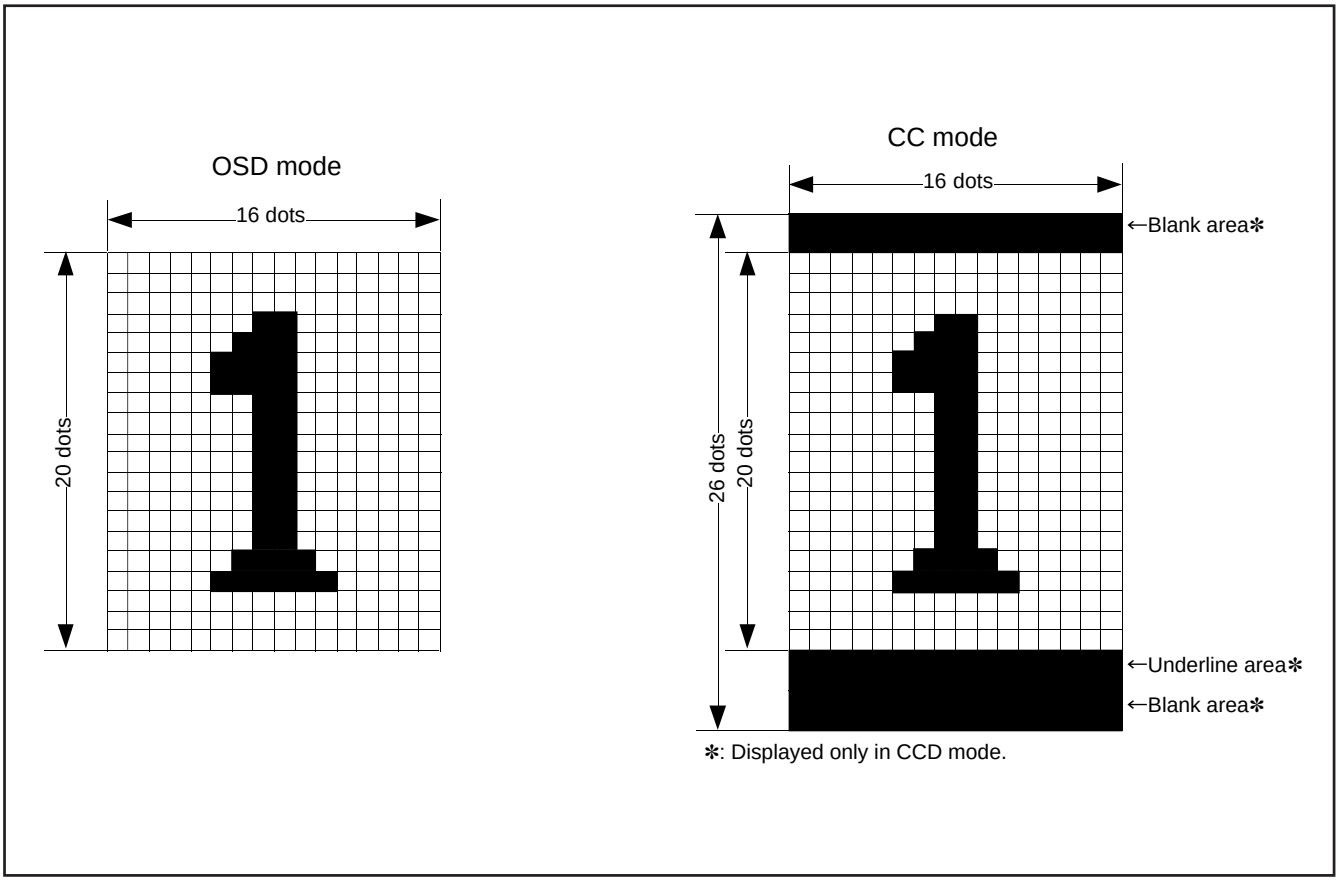

Fig. 8.11.1 Configuration of OSD Character Display Area

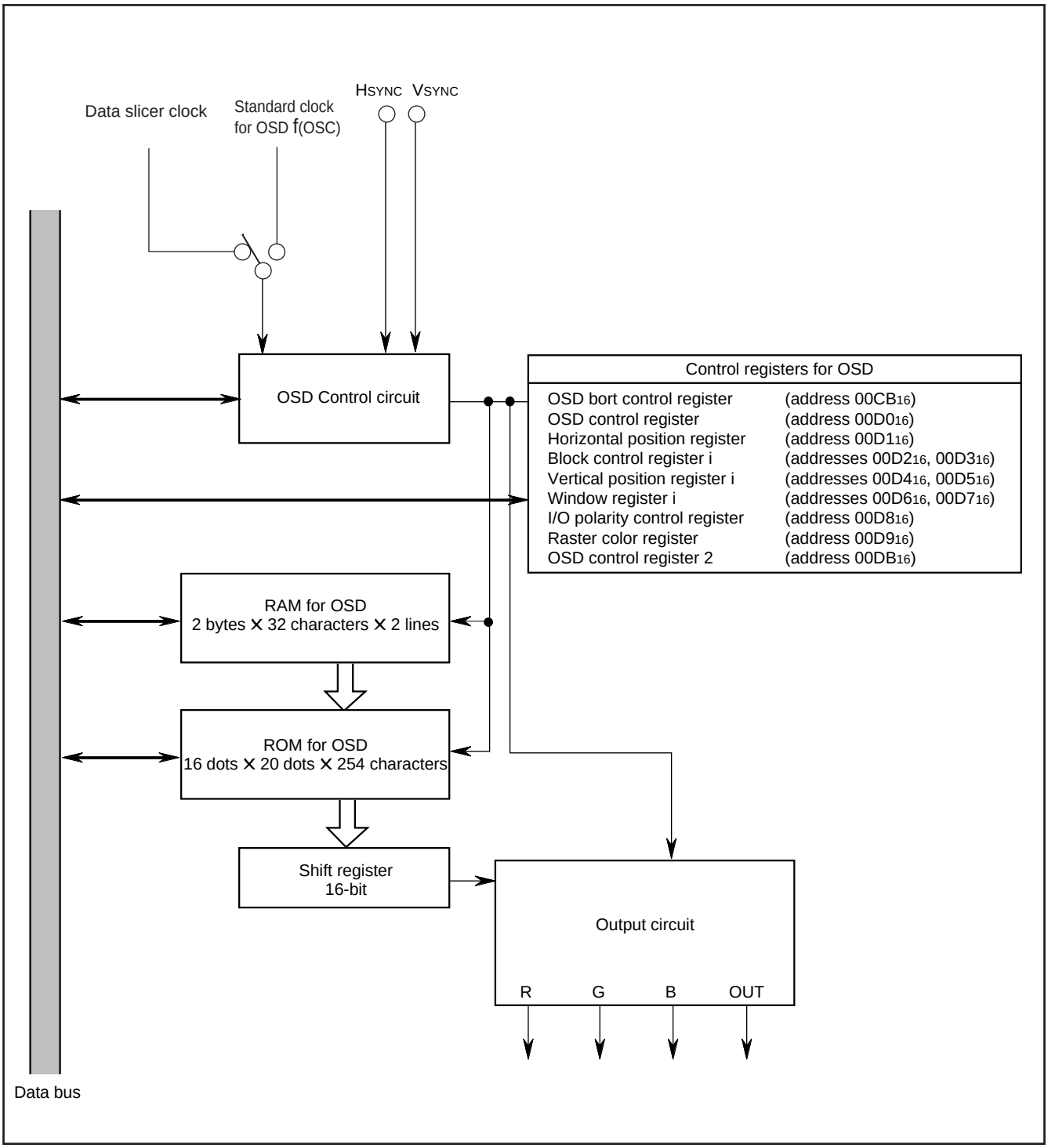

Fig. 8.11.2 Block Diagram of OSD Circuit

OSD Control Register

b7	b6	b5	b4	b3	b2	b1	b0
	0	0					

OSD control register (OC) [Address $00D0_{16}$]

B	Name	Functions	After reset	R	W
0	OSD control bit (OC0) (See note 1)	0 : All-blocks display off 1 : All-blocks display on	0	R	W
1	Automatic solid space control bit (OC1)	0 : OFF 1 : ON	0	R	W
2	Window control bit (OC2)	0 : OFF 1 : ON	0	R	W
3	CC mode clock selection bit (OC3)	0 : Data slicer clock 1 : Internal oscillating clock f(osc)	0	R	W
4	OSD mode clock selection bit (OC4)	0 : Data slicer clock 1 : Internal oscillating clock f(osc)	0	R	W
5, 6	Fix these bits to “0.”		0	R	W
7	Pre-divide ratio selection bit (OC7) (See note 2)	0 : Divide ratio by the block control register 1 : Pre-divide ratios = X 1 for blocks 1 and 2	0	R	W

Notes 1: Even this bit is switched during display, the display screen remains unchanged until a rising (falling) of the next VSYNC

2: This bit's priority is higher than BCi4 of Block Control Register i setting.

Fig. 8.11.3 OSD Control Register

Block Control register i

b7	b6	b5	b4	b3	b2	b1	b0

Block control register i (BCi) (i=1, 2) [Addresses 00D2$_{16}$ and 00D3$_{16}$]

B	Name	Functions	After reset	R	W
0, 1	Display mode selection bits (BCi0, BCi1) (See note 1)	b1 b0 0 0: Display OFF 0 1: CC mode 1 0: OSD mode (Border OFF) 1 1: OSD mode (Border ON)	Indeterminate	R	W
2, 3	Dot size selection bits (BCi2, BCi3)	b4 b3 b2 Pre-divide Ratio Dot Size 0 0 0 0 × 2 1Tc × 1/2H 0 0 1 1 × 2 1Tc × 1H 0 1 0 0 × 2 2Tc × 2H 0 1 1 1 × 2 3Tc × 3H	Indeterminate	R	W
4	Pre-divide ratio selection bit (BCi4)	1 0 0 0 × 3 1Tc × 1/2H 1 0 1 1 × 3 1Tc × 1H 1 1 0 0 × 3 2Tc × 2H 1 1 1 1 × 3 3Tc × 3H	Indeterminate	R	W
5	OUToutput control bit (BCi5)	0: 2 value output control 1: 3 value output control (notes 3)	Indeterminate	R	W
6	Vertical display start position control bit (BCi6)	BC16: Block 1 BC26: Block 1	Indeterminate	R	W
7	Window top/bottom boundary control bit (BCi7)	BC17: Window top boundary BC27: Window bottom boundary	Indeterminate	R	W

Notes 1: Tc is OSD clock cycle divided in pre-divide circuit.
2: H is HSYNC.
3: Refer to the corresponding figure 8.11.18.

Fig. 8.11.4 Block Control Register i

8.11.1 Display Position

The display positions of characters are specified in units called "blocks." There are 2 blocks: blocks 1 and 2. Up to 32 characters can be displayed in each block (refer to "8.11.5 Memory for OSD").
The display position of each block can be set in both horizontal and vertical directions by software.
The display start position in the horizontal direction can be selected for all blocks from 128-step display positions in units of 4TOSC (TOSC = OSD oscillation cycle).
The display start position in the vertical direction for each block can be selected from 512-step display positions in units of 1 TH (in bi-scan mode: 2 TH) (TH = HSYNC cycle).

Blocks are displayed in conformance with the following rules:

- When the display position of block 1 is overlapped with that of block 2 (Figure 8.11.5 (b)), block 1 is displayed in front.
- When another block display position appears while one block is displayed (Figure 8.11.5 (c)), the block with a larger set value as the vertical display start position is displayed.

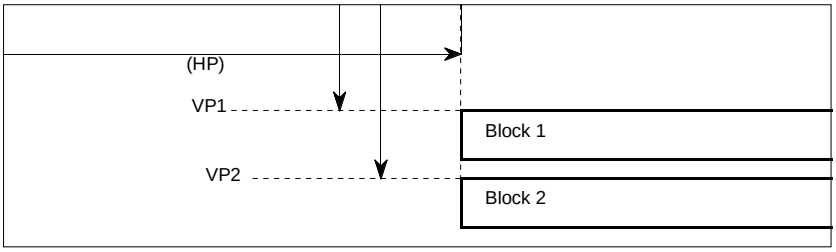

(a) Example when each block is separated

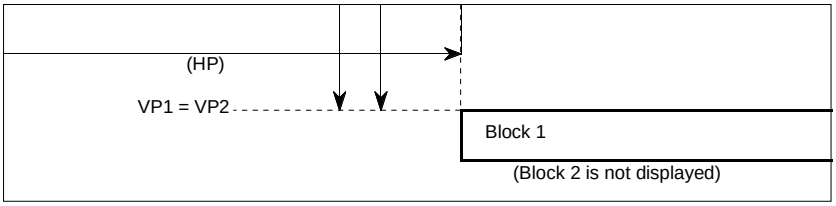

(b) Example when block 2 overlaps with block 1

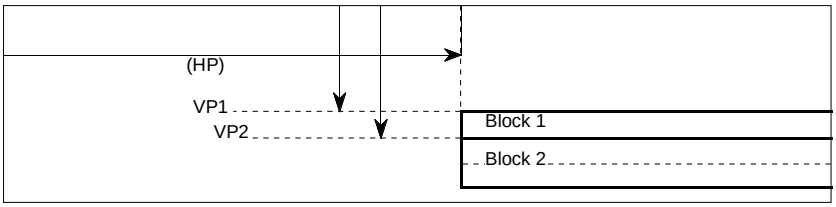

(c) Example when block 2 overlaps in process of block 1

Note: VP1 or VP2 indicates the vertical display start position of display block 1 or 2.

Fig. 8.11.5 Display Position

The vertical display start position is determined by counting the horizontal sync signal (HSYNC). At this time, when VSYNC and HSYNC are positive polarity (negative polarity), the count starts at the rising edge (falling edge) of HSYNC signal after the fixed cycle of the rising edge (falling edge) of VSYNC signal. So the interval from the rising edge (falling edge) of VSYNC signal to the rising edge (falling edge) of HSYNC signal needs enough time (2 machine cycles or more) to avoid jitters. The polarity of HSYNC and VSYNC signals can be select with the I/O polarity control register (address $00D8_{16}$).

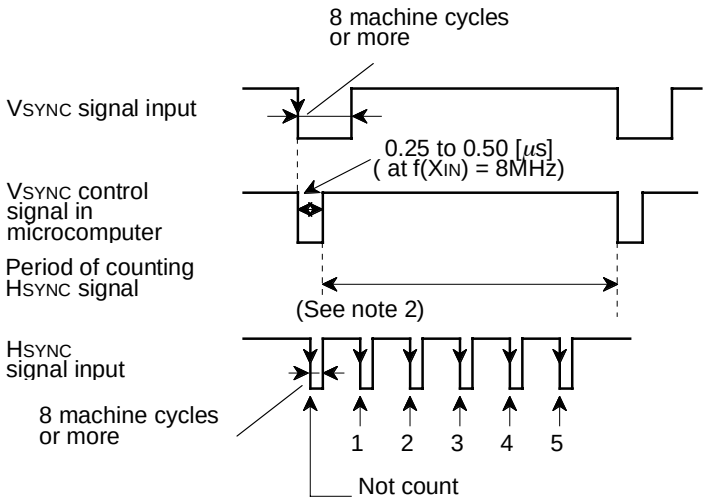

When bits 0 and 1 of the I/O polarity control register (address $00D8_{16}$) are set to “1” (negative polarity)

Notes 1 : The vertical position is determined by counting falling edge of HSYNC signal after rising edge of VSYNC control signal in the microcomputer.
2 : Do not generate falling edge of HSYNC signal near rising edge of VSYNC control signal in microcomputer to avoid jitter.
3 : The pulse width of VSYNC and HSYNC needs 8 machine cycles or more.

Fig. 8.11.6 Supplement Explanation for Display Position

The vertical display start position for each block can be set in 512 steps (where each step is 1TH (TH: HSYNC cycle)) as values “00$_{16}$” to “FF$_{16}$” in vertical position register i (i = 1 and 2) (addresses 00D4$_{16}$ and 00D5$_{16}$) and values “0” or “1” in bit 6 of block control register i (i = 1 and 2) (addresses 00D2$_{16}$ and 00D3$_{16}$). The vertical position register is shown in Figure 8.11.7.

The vertical display start position of both blocks can be switched in each step to 1TH or 2TH by setting values “0” or “1” in bit 1 of OSD control register 2 (address 00DB$_{16}$).

Vertical Position Register i

b7	b6	b5	b4	b3	b2	b1	b0

Vertical position register i (VPi) (i = 1 and 2) [Addresses 00D4$_{16}$, 00D5$_{16}$]

B	Name	Functions	After reset	R	W
0 to 7	Vertical display start position control bits (VPi0 to VPi7) (See notes)	Vertical display start position = TH × (BCi6 × 16^2 + n) (n: setting value, TH: HSYNC cycle, BCi6: bit 6 of block control register i)	Inderterminate	R	W

Notes 1: Set values except “00$_{16}$” to VPi when BCi6 is “0.”
2: When OS21 of OSD control register 2 = “0”, TH = 1HSYNC, and OS21 of OSD control register 2 = “1”, TH = 2HSYNC.

Fig. 8.11.7 Vertical Position Register i (i = 1 and 2)

The horizontal display start position is common to all blocks, and can be set in 128 steps (where 1 step is 4TOSC, TOSC being the OSD oscillation cycle) as values “00$_{16}$” to “FF$_{16}$” in bits 0 to 6 of the horizontal position register (address 00D1$_{16}$). The horizontal position register is shown in Figure 8.11.8.

Horizontal Position Register

b7 b6 b5 b4 b3 b2 b1 b0

Horizontal position register (HP) [Address 00D1$_{16}$]

B	Name	Functions	After reset	R	W
0 to 6	Horizontal display start position control bits (HP0 to HP6)	Horizontal display start position 4Tosc × n (n: setting value, Tosc: OSD oscillation cycle)	0	R	W
7	Nothing is assigned. This bit is a write disable bit. When this bit is read out, the value is “0.”		0	R	—

Note: The setting value synchronizes with the V SYNC.

Fig. 8.11.8 Horizontal Position Register

Notes 1 : 1TC (TC : OSD clock cycle divided in pre-divide circuit) gap occurs between the horizontal display start position set by the horizontal position register and the most left dot of the 1st block. Accordingly, when 2 blocks have different pre-divide ratios, their horizontal display start position will not match.

2 : The horizontal start position is based on the OSD clock source cycle selected for each block. Accordingly, when 2 blocks have different OSD clock source cycles, their horizontal display start position will not match.

3 : When setting “00$_{16}$” to the horizontal position register, it needs an approximately 62TOSC (= Tdef) interval from a rising edge (when negative polarity is selected) of HSYNC signal to the horizontal display start position.

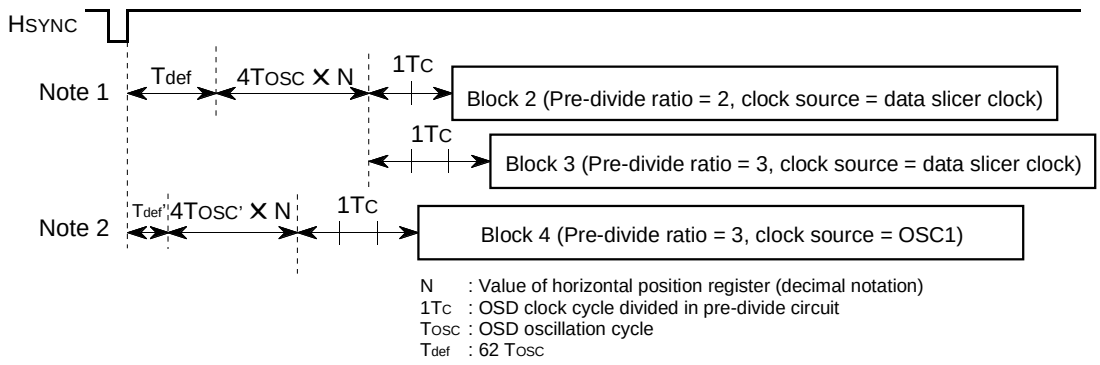

Fig. 8.11.9 Notes on Horizontal Display Start Position

8.11.2 Dot Size

The dot size can be selected in block units. The vertical dot size is determined by dividing HSYNC in the vertical dot size control circuit. The horizontal dot size is determined by dividing the following clock in the horizontal dot size control circuit : the clock gained by dividing the OSD clock source (data slicer clock, f (OSC) in the pre-divide circuit. The clock cycle divided in the pre-divide circuit is defined as 1TC.

The dot size of each block is specified by bits 2 to 4 of block control register i.

Refer to Figure 8.11.4 for the structure of the block control register.

The block diagram of the dot size control circuit is shown in Figure 8.11.10.

The pre-divide ratio is specified by bit 7 of the OSD control register (address 00D016) and bit 4 of block control register i (addresses 00D216 and 00D316) .

When bit 7 of the OSD control register (address 00D016) is set to "0," the double or triple pre-divide ratio can be chosen per block unit by bit 4 of block control register i. And then, when it is set to "1", the pre-divide ratio increases 1 time (both blocks 1 and 2). The pre-divided dot size can be specified per block unit by bits 2 and 3 of block control register i.

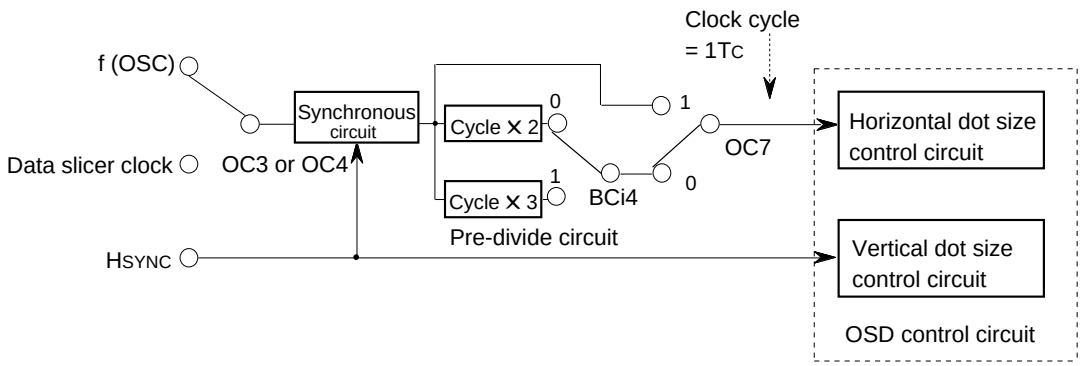

Note: To use data slicer clock, set bit 0 of data slicer control register 1 to 1.

Fig. 8.11.10 Block Diagram of Dot Size Control Circuit

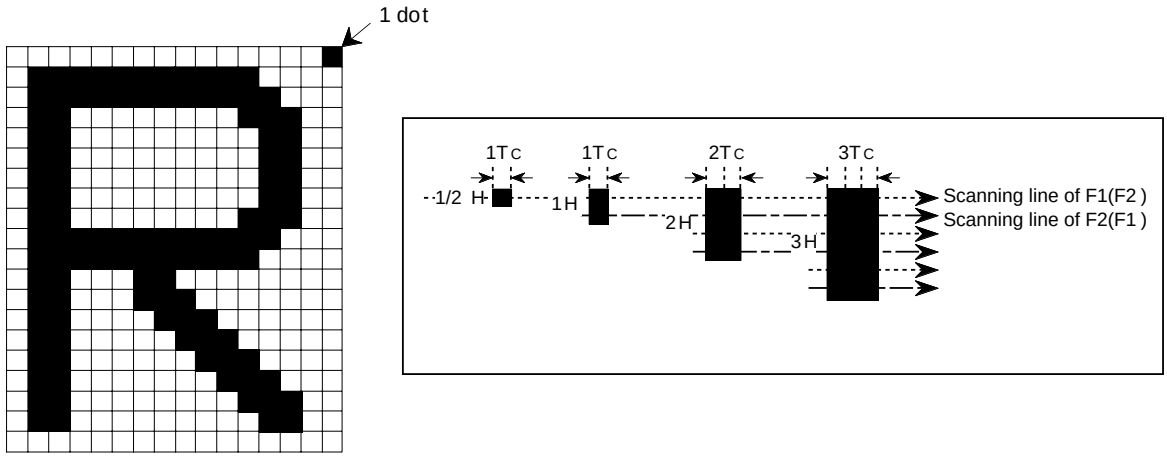

Fig. 8.11.11 Definition of Dot Sizes

8.11.3 Clock for OSD

The following 2 types of clocks can be selected for OSD display:

- Data slicer clock output from the data slicer (approximately 26 MHz)
- OSD clock f (osc) generated based on the reference clock from pin FSCIN.

The OSD clock for each block can be selected by: bits 3 and 4 of the clock source control register (addresses $00D0_{16}$). A variety of character sizes can be obtained by combining dot sizes with OSD clocks.

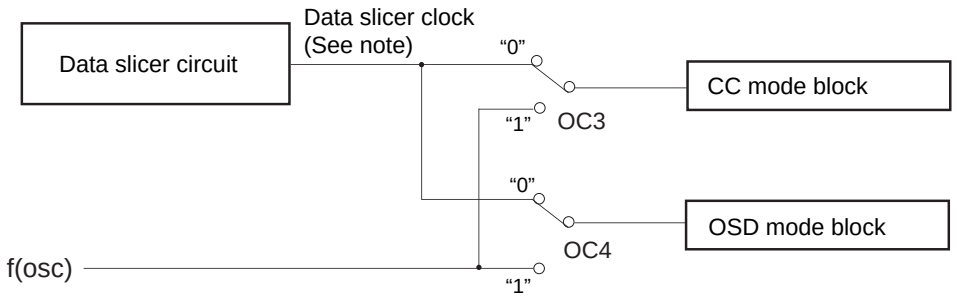

Note: To use data slicer clock, set bit 0 of data slicer control register 1 to "1."

Fig. 8.11.12 Block Diagram of OSD Selection Circuit

Clock control register 1

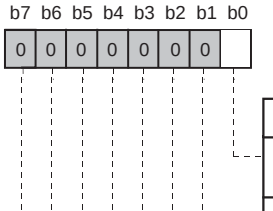

Clock control register 1 (CC1) [Address $00CD_{16}$]

B	Name	Functions	After reset	R	W
0	System clock generating circuit control bit (CC10)	0: Operation 1: Stop	0	R	W
1 to 7	Fix these bits to "0"		0	R	W

Fig. 8.11.13 Clock control register 1

8.11.4 Field Determination Display

When displaying a block with vertical dot size of 1/2H, the differences in the synchronizing signal waveform of the interlacing system determine whether the field is odd or even. The dot lines 0 and 1 (refer to Figure 8.11.15), corresponding to each field, are displayed alternately.

In the following, the field determination standard for the case where both the horizontal sync signal and the vertical sync signal are negative-polarity inputs will be explained. A field determination is determined by detecting the time from a falling edge of the horizontal sync signal until a falling edge of the VSYNC control signal (refer to Figure 8.11.6) in the microcomputer and then comparing this time with the time of the previous field. When the time is longer than the previous time, it is regarded as an even field. When the time is shorter, it is regarded as an odd field

The contents of this field can be read out by the field determination flag (bit 6 of the I/O polarity control register at address $00D8_{16}$). A dot line is specified by bit 5 of the I/O polarity control register (refer to Figure 8.11.15).

However, the field determination flag read out from the CPU is fixed to “0” for even fields or “1” for odd fields, regardless of bit 5.

I/O Polarity Control Register

b7	b6	b5	b4	b3	b2	b1	b0
0			0				

I/O polarity control register (PC) [Address $00D8_{16}$]

B	Name	Functions	After reset	R	W
0	HSYNC input polarity switch bit (PC0)	0 : Positive polarity input 1 : Negative polarity input	0	R	W
1	VSYNC input polarity switch bit (PC1)	0 : Positive polarity input 1 : Negative polarity input	0	R	W
2	R, G, B output polarity switch bit (PC2)	0 : Positive polarity output 1 : Negative polarity output	0	R	W
3	OUT1 output polarity switch bit (PC3)	0 : Positive polarity output 1 : Negative polarity output	0	R	W
5	Display dot line selection bit (PC5) (See note)	0 : ☐ at even field ■ at odd field 1 : ■ at even field ☐ at odd field	0	R	W
6	Field determination flag (PC6)	0 : Even field 1 : Odd field	1	R	
4, 7	Fix these bits to 0.		0	R	W

Note: Refer to the corresponding figure. 8.11.15

Fig. 8.11.14 I/O Polarity Control Register

Both HSYNC cignal and VSYNC signal are negative-polarity input

HSYNC		Field	Field determination flag(Note)	Display dot line selection bit	Display dot line
VSYNC and VSYNC control signal in microcom-puter Upper : VSYNC signal Lower : VSYNC control signal in micro-computer	(n – 1) field (Odd-numbered) T1 0.25 to 0.50[µs] at f(XIN) = 8 MHz	Odd			
	(n) field (Even-numbered) T2	Even	0 (T2 > T1)	0	Dot line 1
				1	Dot line 0
	(n + 1) field (Odd-numbered) T3	Odd	1 (T3 < T2)	0	Dot line 0
				1	Dot line 1

When using the field determination flag, be sure to set bit 0 of the PWM mode register 1 (address 0208 16) to "0."

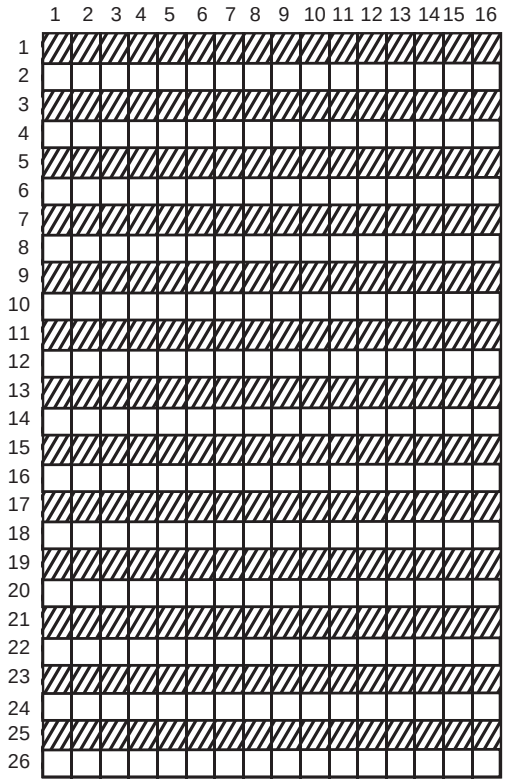

CC mode

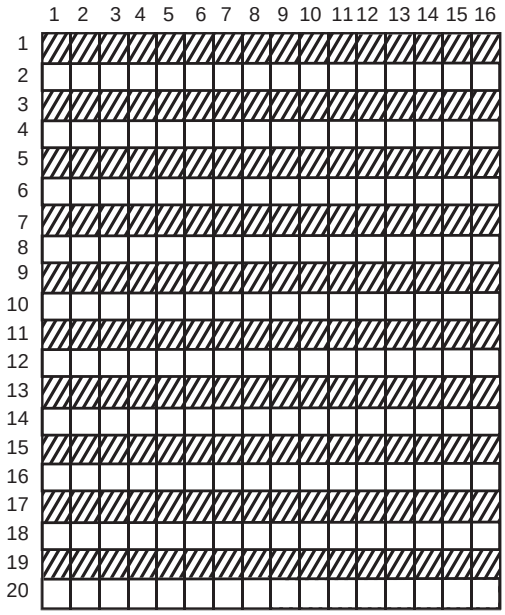

OSD mode

When the display dot line selection bit is "0," the "□" font is displayed at even field, the "▨" font is displayed at odd field. Bit 6 of the I/O polarity control register can be read as the field determination flag : "1" is read at odd field, "0" is read at even field.

OSD ROM font configuration diagram

Note : The field determination flag changes at a rising edge of the V SYNC control signal (negative-polarity input) in the microcomputer.

Fig. 8.11.15 Relation between Field Determination Flag and Display Font

8.11.5 Memory for OSD

There are 2 types of memory for OSD: OSD ROM used to store character dot data and OSD RAM used to specify the characters and colors to be displayed.

OSD ROM : addresses 11400_{16} to $13BFF_{16}$
OSD RAM : addresses 0800_{16} to $087F_{16}$

(1) OSD ROM

The dot pattern data for OSD characters is stored in the OSD ROM. To specify the kinds of character font, it is necessary to write the character code into the OSD RAM.
Data of the character font is specified as shown in Figure 8.11.16.

OSD ROM address of character font data

OSD ROM address bit	AD16	AD15	AD14	AD13	AD12	AD11	AD10	AD9	AD8	AD7	AD6	AD5	AD4	AD3	AD2	AD1	AD0
Line number/character code/font bit	1	0	0	Line number					Character code								Font bit

Line number = "$0A_{16}$" to "$1D_{16}$"
Character code = "00_{16}" to "FF_{16}" ("$7F_{16}$" and "80_{16}" cannot be used)
Font bit = 0 : Left area
1 : Right area

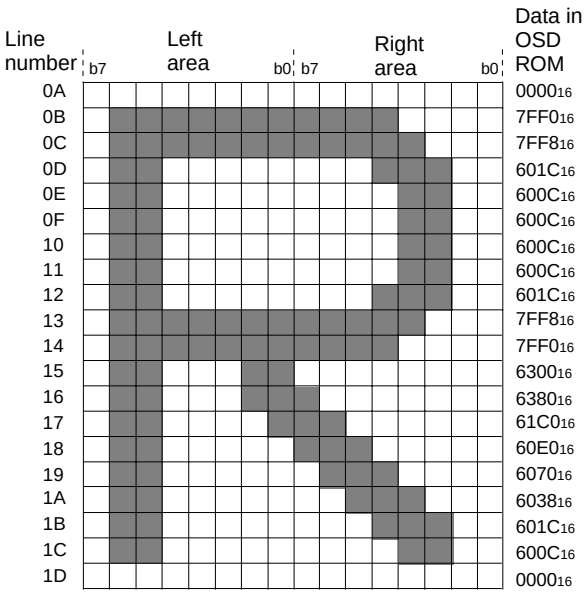

Character font

Fig. 8.11.16 Character Font Data Storing Address

Notes 1 : The 80-byte addresses corresponding to the character code "$7F_{16}$" and "80_{16}" in the OSD ROM are the test data storing area. Set data to the area as follows.

<Test data storing area>
addresses 11000_{16} + (4 + 2n) × 100_{16} + FE_{16} to
11000_{16} + (5 + 2n) × 100_{16} + 01_{16}
(n = 0 to 19)

(1)Mask version (M37150M6/M8/MA/MC/MF-XXXFP)
Set "FF_{16}" to the area (This sample has test data in this area but the actual product will have different data.
When using our font editor, the test data is written automatically.
(2)EPROM version (M37150EFFP)
Set the test data to the area. When using our font editor, the test data is written automatically.

■M37150EFFP
<"$7F_{16}$"> address (test data)
$114FE_{16}$ (09_{16}), $114FF_{16}$ (51_{16})
$116FE_{16}$ (00_{16}), $116FF_{16}$ (52_{16})
$118FE_{16}$ (12_{16}), $118FF_{16}$ (53_{16})
$11AFE_{16}$ (00_{16}), $11AFF_{16}$ (54_{16})
$11CFE_{16}$ (24_{16}), $11CFF_{16}$ (55_{16})
$11EFE_{16}$ (00_{16}), $11EFF_{16}$ (56_{16})
$120FE_{16}$ (88_{16}), $120FF_{16}$ (57_{16})
$122FE_{16}$ (00_{16}), $122FF_{16}$ (58_{16})
$124FE_{16}$ (90_{16}), $124FF_{16}$ (59_{16})
$126FE_{16}$ (48_{16}), $126FF_{16}$ ($5A_{16}$)
$128FE_{16}$ (24_{16}), $128FF_{16}$ ($5B_{16}$)
$12AFE_{16}$ (00_{16}), $12AFF_{16}$ ($5C_{16}$)
$12CFE_{16}$ (24_{16}), $12CFF_{16}$ ($5D_{16}$)
$12EFE_{16}$ (48_{16}), $12EFF_{16}$ ($5E_{16}$)
$130FE_{16}$ (00_{16}), $130FF_{16}$ ($5F_{16}$)
$132FE_{16}$ (48_{16}), $132FF_{16}$ (50_{16})
$134FE_{16}$ (90_{16}), $134FF_{16}$ (51_{16})
$136FE_{16}$ (00_{16}), $136FF_{16}$ (52_{16})
$138FE_{16}$ (01_{16}), $138FF_{16}$ (53_{16})
$13AFE_{16}$ (80_{16}), $13AFF_{16}$ (54_{16})

<"80_{16}"> address (test data)
11500_{16} (90_{16}), 11501_{16} ($A1_{16}$)
11700_{16} (00_{16}), 11701_{16} ($A2_{16}$)
11900_{16} (48_{16}), 11901_{16} ($A3_{16}$)
$11B00_{16}$ (00_{16}), $11B01_{16}$ ($A4_{16}$)
$11D00_{16}$ (24_{16}), $11D01_{16}$ ($A5_{16}$)
$11F00_{16}$ (00_{16}), $11F01_{16}$ ($A6_{16}$)
12100_{16} (12_{16}), 12101_{16} ($A7_{16}$)
12300_{16} (00_{16}), 12301_{16} ($A8_{16}$)
12500_{16} (09_{16}), 12501_{16} ($A9_{16}$)
12700_{16} (00_{16}), 12701_{16} (AA_{16})
12900_{16} (81_{16}), 12901_{16} (AB_{16})
$12B00_{16}$ (18_{16}), $12B01_{16}$ (AC_{16})
$12D00_{16}$ (00_{16}), $12D01_{16}$ (AD_{16})
$12F00_{16}$ (42_{16}), $12F01_{16}$ (AE_{16})
13100_{16} (24_{16}), 13101_{16} (AF_{16})
13300_{16} (00_{16}), 13301_{16} ($B0_{16}$)
13500_{16} (81_{16}), 13501_{16} ($B1_{16}$)
13700_{16} ($0C_{16}$), 13701_{16} ($B2_{16}$)
13900_{16} (06_{16}), 13901_{16} ($B3_{16}$)
$13B00_{16}$ (00_{16}), $13B01_{16}$ ($B4_{16}$)

2 : The character code "09_{16}" is used for "transparent space" when displaying Closed Caption.
Therefore, set "00_{16}" to the 40-byte addresses corresponding to the character code "09_{16}."

<Transparent space font data storing area>
addresses 11000_{16} + (4 + 2n) × 100_{16} + 12_{16} to
11000_{16} + (4 + 2n) × 100_{16} + 13_{16}
(n = 0 to 19)

[addresses 11412_{16} and 11413_{16}
addresses 11612_{16} and 11613_{16}
⋮
addresses 13812_{16} and 13813_{16}
addresses $13A12_{16}$ and $13A13_{16}$]

(2) OSD RAM

The RAM for OSD is allocated at addresses 0800_{16} to $087F_{16}$, and is divided into a display character code specification part, color code 1 specification part, and color code 2 specification part for each block. Table 8.11.2 shows the contents of the OSD RAM.

For example, to display the first character position (the left edge) in block 1, write the character code in address 0800_{16} and write the color code at 0820_{16}.

The structure of the OSD RAM is shown in Figure 8.11.17.

Table 8.11.2 Contents of OSD RAM

Block	Display Position (from left)	Character Code Specification	Color Code Specification
Block 1	1st character	0800_{16}	0820_{16}
	2nd character	0801_{16}	0821_{16}
	3rd character : 30th character	0802_{16} : $081D_{16}$	0822_{16} : $083D_{16}$
	31st character	$081E_{16}$	$083E_{16}$
	32nd character	$081F_{16}$	$083F_{16}$
Block 2	1st character	0840_{16}	0860_{16}
	2nd character	0841_{16}	0861_{16}
	3rd character : 30th character	0842_{16} : $085D_{16}$	0862_{16} : $087D_{16}$
	31st character	$085E_{16}$	$087E_{16}$
	32nd character	$085F_{16}$	$087F_{16}$

Blocks 1, 2

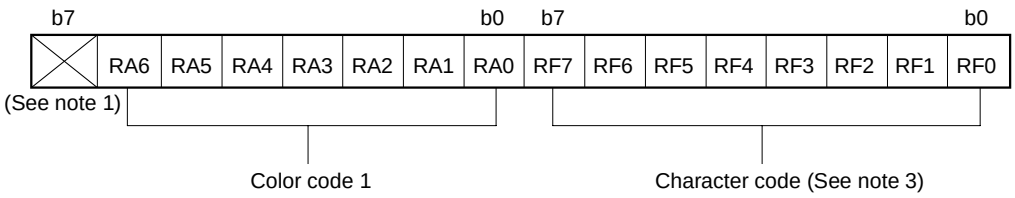

Bit	CC mode		OSD mode	
	Bit name	Function	Bit name	Function
RF0	Character code	Character code in OSD ROM	Character code	Character code in OSD ROM
RF1				
RF2				
RF3				
RF4				
RF5				
RF6				
RF7				
RA0	Control of character color R	0: Color signal output OFF 1: Color signal output ON	Control of character color R	0: Color signal output OFF 1: Color signal output ON
RA1	Control of character color G		Control of character color G	
RA2	Control of character color B		Control of character color B	
RA3	OUT control	(See note 2)	OUT control	(See note 2)
RA4	Flash control	0: Flash OFF 1: Flash ON	Control of background color R	0: Color signal output OFF 1: Color signal output ON
RA5	Underline control	0: Underline OFF 1: Underline ON	Control of background color G	
RA6	Italic control	0: Italic OFF 1: Italic ON	Control of background color B	

Notes 1: Read value of bits 7 of the color code is “0.”
2: For OUT control, refer to “8.11.8 OUT signal.”
3: “$7F_{16}$” and “80_{16}” cannot be used as character code.

Fig. 8.11.17 Bit structure of OSD RAM

8.11.6 Character color

The color for each character is displayed by the color code.
The 7 kinds of color are specified by bits 0 (R), 1 (G), and 2 (B) of the color code.

8.11.7 Character background color

The character background color can be displayed in the character display area only in the OSD mode. The character background color for each character is specified by the color code.
The 7 kinds of color are specified by bits 0 (R), 1 (G), and 2 (B) of the color code.

Note : The character background color is displayed in the following parts:
(character display area)–(character font)–(border).
Accordingly, the character background color does not mix with these color signals.

8.11.8 OUT signal

The OUT signal is used to control the luminance of the video signal. The output waveform of the OUT signal is controlled by RA3 of the OSD RAM. The setting values for controlling OUT and the corresponding output waveform are shown in Figure 8.11.18.

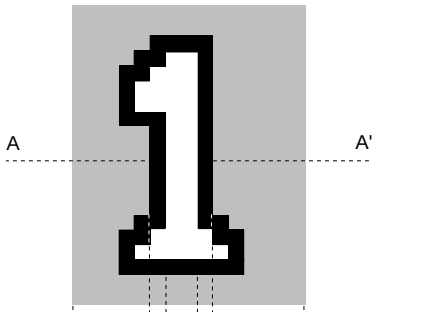

Display Mode	Block Control Register i OUT Output Control Bit (b5)	OUT control (RA3 of OSD RAM)	Output Waveform (A-A')
OSD	0	0	OUT=FONT/BORDER
		1	OUT=AREA
	1	0	OUT=FONT/BORDER
		1	OUT=FONT/BORDER
CC	0	0	OUT=FONT
		1	OUT=AREA
	1	0	OUT=FONT
		1	OUT=FONT

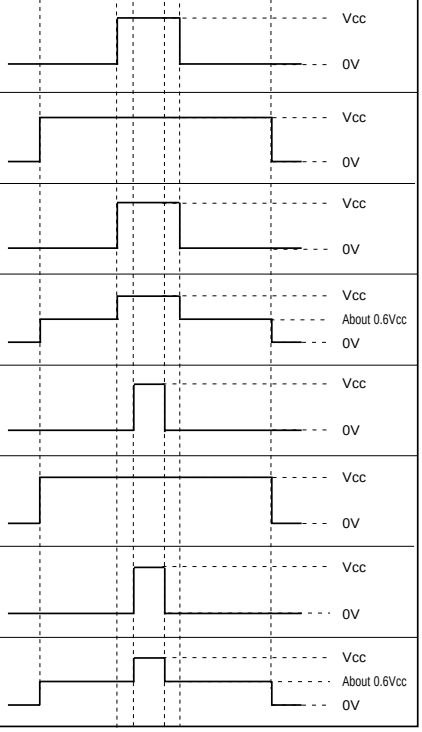

Notes 1: FONT/BORDER.....In the OSD mode (Border ON), OUT outputs to the area of font and border.
In the OSD mode (Border OFF), OUT outputs to only the font area.
AREA.....OUT outputs to entire display area of character.
FONT.....In the CC mode, OUT outputs to font area.
2: When the automatic solid space function is OFF in the CC mode, AREA outputs according to bit 3 of color code. When it is ON, the solid space is automatically output by a character code regardless of RA3.
3: The OUT signal's three-level outputs are useful only during positive polarity output.
4: For three-level OUT signal outputs, set Port P3 Direction Register (address $00C7_{16}$) bit 2 to 1.
5: For three-level OUT signal outputs, set about 2 kΩ resistor between OUT pin and V_{SS}.

Fig. 8.11.18 Setting Value for Controlling OUT and Corresponding Output Waveform

8.11.9 Attribute

The attributes (border, flash, underline, italic) are controlled according to the character font. The attributes to be controlled are different depending on each mode.

CC mode ..... Flash, underline, italic (per character unit)
OSD mode ..... Border (per character unit)

(1) Underline

The underline is output at the 23th and 24th dots in the vertical direction only in the CC mode. The underline is controlled by RA5 of the OSD RAM. The color of the underline is the same color as that of the character font.

(2) Flash

The character font and the underline are flashed only in the CC mode. The flash is controlled by RA4 of OSD RAM. In the character font part, the character output part is flashed, but the character background part is not flashed. The flash cycle is based on the VSYNC count.

- VSYNC cycle × 48 ≈ 800 ms (at display ON)
- VSYNC cycle × 16 ≈ 267 ms (at display OFF)

(3) Italic

The italic is made by slanting the font stored in the OSD ROM to the right only in the CC mode. The italic is controlled by RA6 of OSD RAM.

Display examples of the italic and underline are shown in Figure 8.11.19, using “R.”

Notes 1: When setting both the italic and the flash, the italic character flashes.
2: The boundary of character color is displayed in italic. However, the boundary of character background color is not affected by the italic (refer to Figure 8.11.20).
3: The adjacent character (one side or both sides) to an italic character is displayed in italic even when the character is not specified to be displayed in italic (refer to Figure 8.11.20).
4: Italics display cannot be used at pre-divided ratio 1 setting .

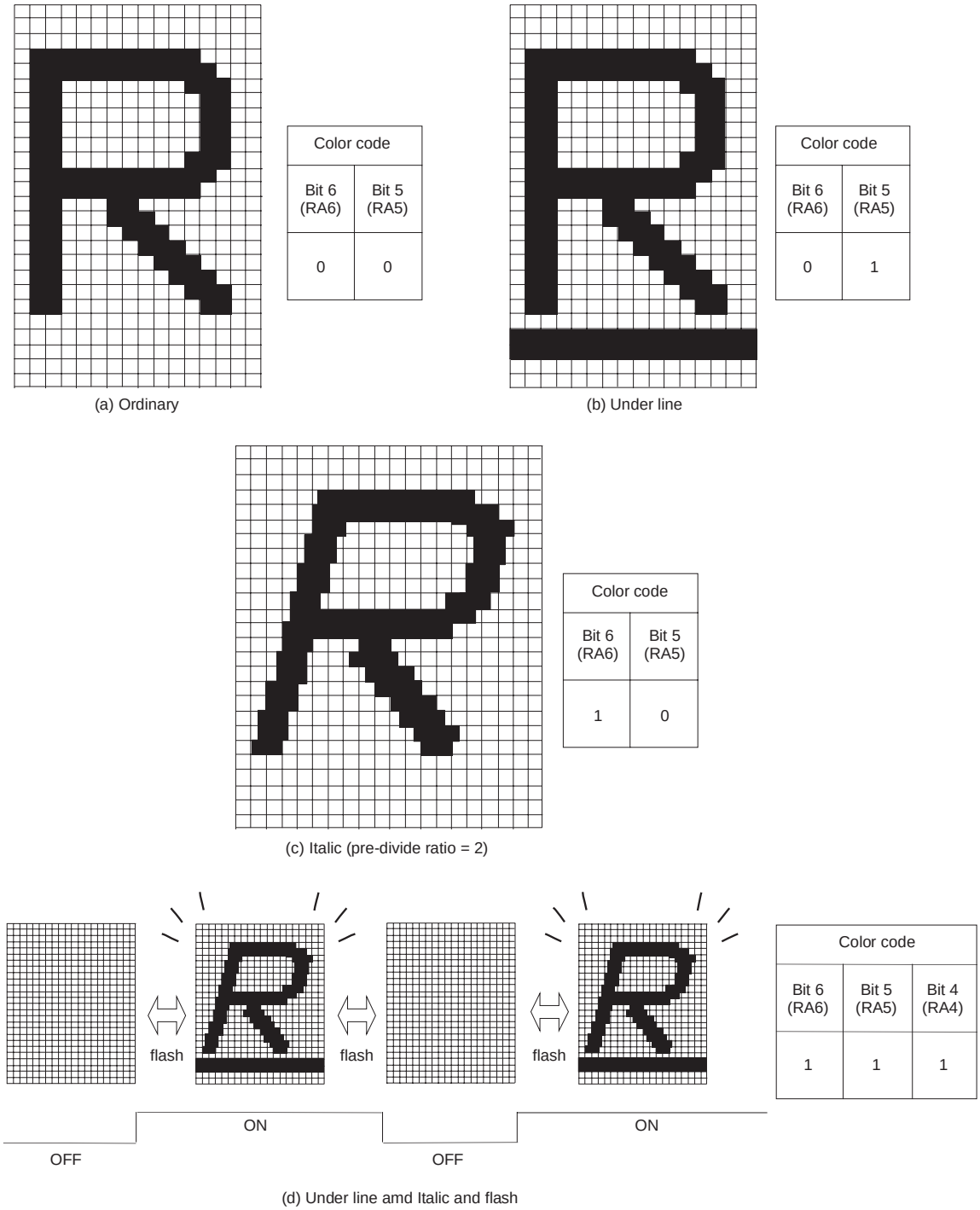

Fig. 8.11.19 Example of Attribute Display (in CC Mode)

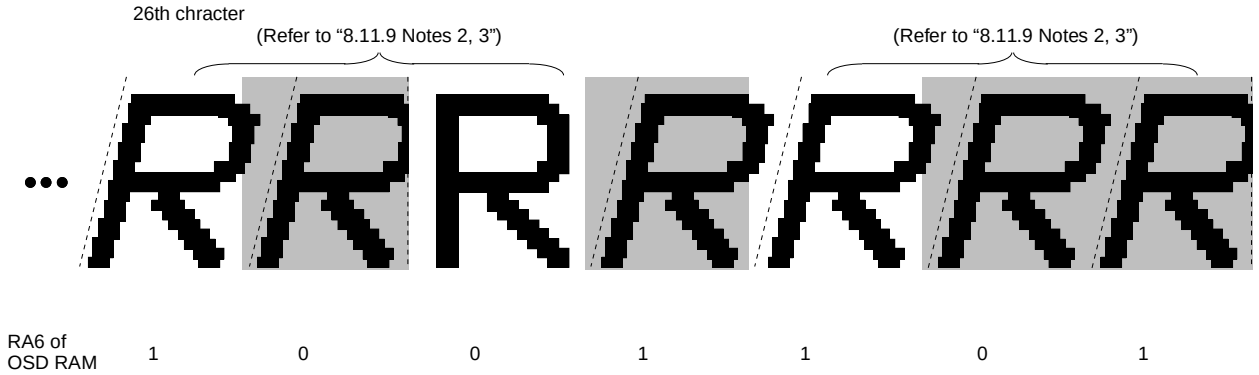

Notes 1 : The dotted line is the boundary of character color.
2 : When bit 1 of OSD control register is “0.”

Fig. 8.11.20 Example of Italic Display

(4) Border

The border is output around the character font (all bordered) in the OSD mode only. The border ON/OFF is controlled by bit 0 and 1 of block control register i (refer to Figure 8.11.4).
The OUT signal is used for border output.
The horizontal size (x) of the border is 1Tc (OSD clock cycle divided in pre-divide circuit) regardless of the character font dot size. The vertical size (y) differs depending on the screen scan mode and the vertical dot size of the character font.

Notes 1 : The border dot area is the shaded area as shown in Figure 8.11.21.
2 : When the border dot overlaps on the next character font, the character font has priority (refer to Figure 8.11.23 A).
When the border dot overlaps the next character back ground, the border has priority (refer to Figure 8.11.23 B).
3 : The border in vertical out of the character area is not displayed (refer to Figure 8.11.23).

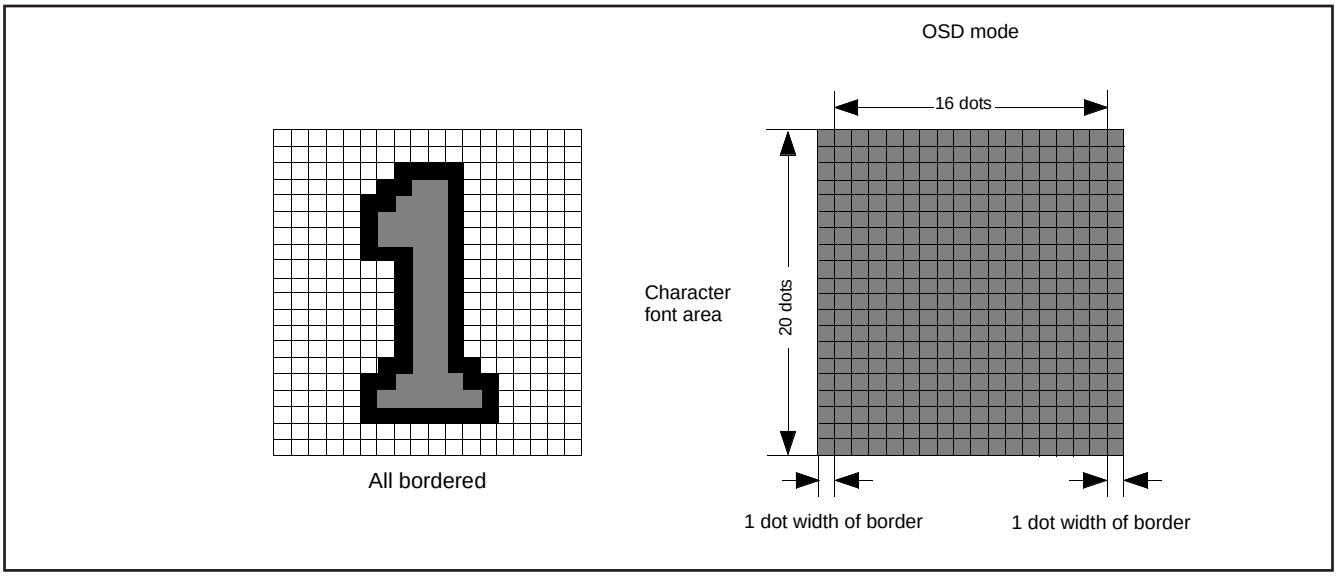

Fig. 8.11.21 Example of Border Display

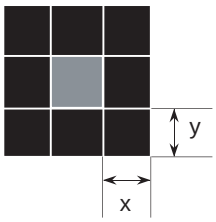

Scan mode	Normal scan mode		Bi-scan mode
Vertical dot size of character font / Border dot size	1/2H	1H, 2H, 3H	1H, 2H, 4H, 6H
Horizontal size (x)	1Tc (OSD clock cycle divided in pre-divide circuit)		
Vertical size (y)	1/2H	1H	1H

Fig. 8.11.22 Horizontal and Vertical Size of Border

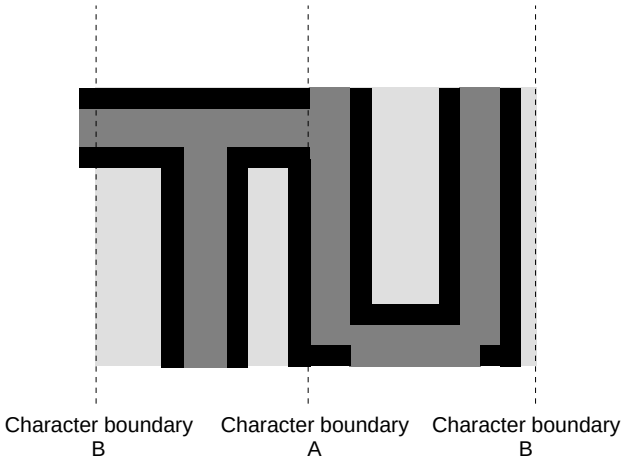

Fig. 8.11.23 Border Priority

8.11.10 Multiline Display

This microcomputer can ordinarily display 2 lines on the CRT screen by displaying 2 blocks at different vertical positions. In addition, it can display up to 16 lines by using OSD interrupts.

An OSD interrupt request occurs at the point at which that display of each block has been completed. In other words, when a scanning line reaches the point of the display position (specified by the vertical position registers) of a certain block, the character display of that block starts, and an interrupt occurs at the point at which the scanning line exceeds the block.

Notes 1: An OSD interrupt does not occur at the end of display when the block is not displayed. In other words, if a block is set to display off by the display control bit of the block control register (addresses $00D2_{16}$, $00D3_{16}$), an OSD interrupt request does not occur (refer to Figure 8.11.24 (A)).

2: When another block display appears while one block is displayed, an OSD interrupt request occurs only once at the end of the second block display (refer to Figure 8.11.24 (B)).

3: On the screen setting window, an OSD interrupt occurs even at the end of the CC mode block (display off) out of window (refer to Figure 8.11.24 (C)).

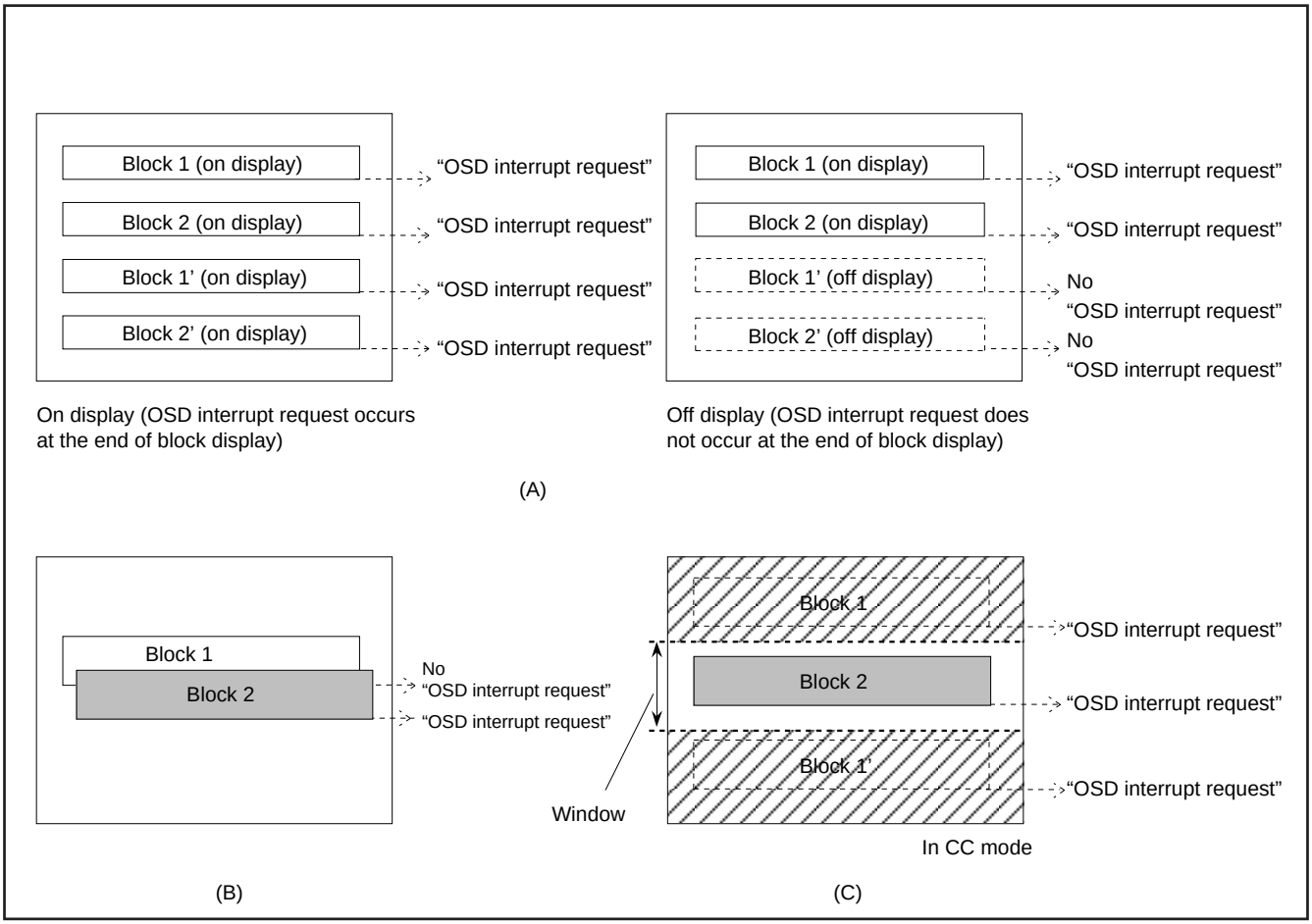

Fig. 8.11.24 Note on Occurence of OSD Interrupt

8.11.11 Automatic Solid Space Function

This function automatically generates the solid space (OUT blank output) of the character area in the CC mode.

The solid space is output in the following areas :

- Any character area except character code “09_{16} ”
- Character area on the left and right sides of the above character

This function is turned on and off by bit 1 of the OSD control register (refer to Figure 8.11.3).

Notes : The character code “09_{16}” is used for “transparent space” when displaying Closed Caption.
Therefore, set “00_{16}” to the 40-byte addresses corresponding to the character code “09_{16}.”

<Transparent space font data storing area>
addresses 11000_{16} + (4 + 2n) × 100_{16} + 12_{16} to
11000_{16} + (4 + 2n) × 100_{16} + 13_{16}
(n = 0 to 19)

[addresses 11412_{16} and 11413_{16}
addresses 11612_{16} and 11613_{16}
⋮
addresses 13812_{16} and 13813_{16}
addresses $13A12_{16}$ and $13A13_{16}$]

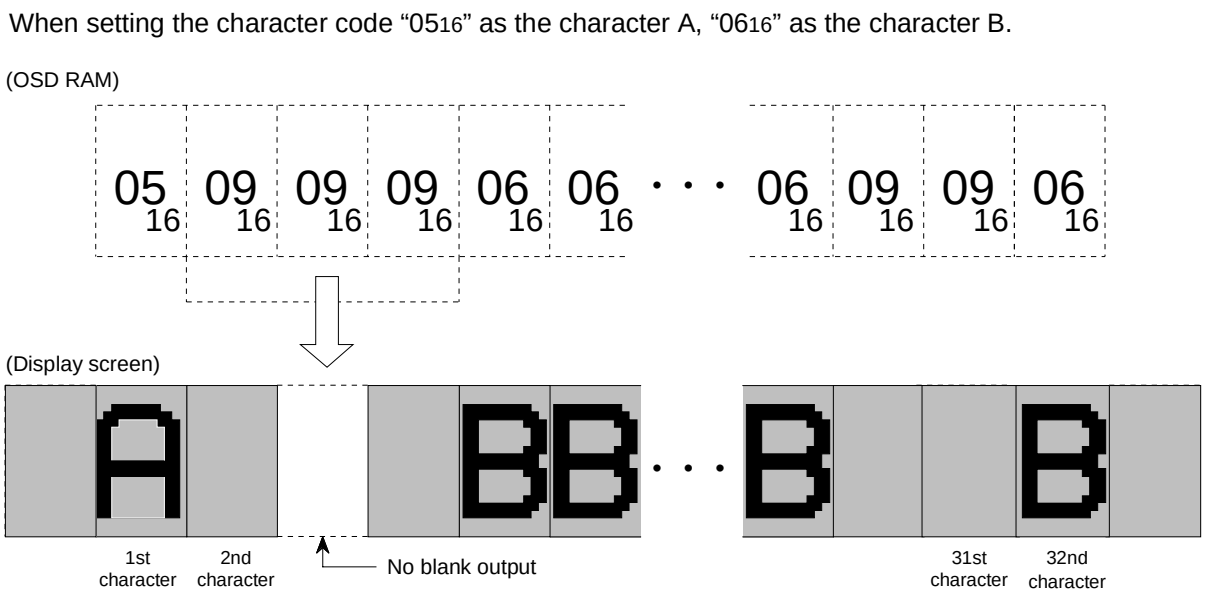

The solid space is automatically output on the left side of the 1st character and on the right side of the 32nd character by setting the 1st and 32nd of the character code.

Fig. 8.11.25 Display Screen Example of Automatic Solid Space

8.11.12 Scan mode

The bi-scan mode corresponds to HSYNC of twice as much frequency as usual. The vertical display position and the vertical dotsize double compared to the normal scan mode.
In the scan mode, the vertical dot size is set by bit 0 of OSD control register 2 and the vertical display start position by bit 1, independently.

Table 8.11.3 Setting of Scan Mode

Item \ Scan mode	Normal scan	Bi-scan
Bit 0 of OSD control register 2	0	1
Vertical dot size	1Tc × 1/2H 1Tc × 1H 2Tc × 2H 3Tc × 3H	1Tc × 1H 1Tc × 2H 2Tc × 4H 3Tc × 6H
Bit 1 of OSD control register 2	0	1
Verical display start position	A value of verical position register × 1H	A value of verical position register × 2H

8.11.13 Window Function

This function sets the top and bottom boundaries for display limits on a screen. The window function is valid only in the CC mode. The top boundary is set by the window register 1 and bit 7 of block control register 1. The bottom boundary is set by window register 1 and bit 7 of block control register 2. This function is turned on and off by bit 2 of the OSD control register (refer to Figure 8.11.3).
Window registers 1 and 2 are shown in Figures 8.11.27 and 8.11.28.

The setting value per one step of the top and bottom window borders can be switched to either 1TH or 2TH by setting “0” or “1” to bit 1 of OSD control register 2 (address 02DB16).

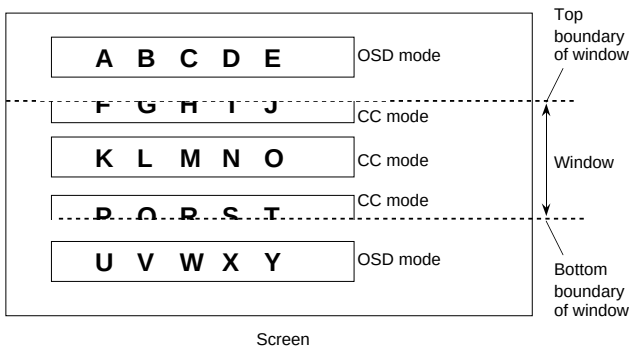

Fig. 8.11.26 Example of Window Function

Window Register 1

b7	b6	b5	b4	b3	b2	b1	b0

Window register 1 (WN1) [Address $00D6_{16}$]

B	Name	Functions	After reset	R	W
0 to 7	Window top boundary control bits (WN10 to WN17)	Window top border position = $T_H \times (BC17 \times 16^2 + n)$ (n: setting value, T_H: H_{SYNC} cycle, BC17: bit 7 of block control register 1)	Inderterminate	R	W

Notes 1: Set values except "00_{16}" to WN1 when BC17 is "0."
2: Set values fit for the following condition: WN1 < WN2.
3: When OC21 of OSD control register 2 is "0", T_H is 1 H_{SYNC}.
And when "1", T_H is 2 H_{SYNC}.

Fig. 8.11.27 Window Register 1

Window Register 2

b7	b6	b5	b4	b3	b2	b1	b0

Window register 2 (WN2) [Address $00D7_{16}$]

B	Name	Functions	After reset	R	W
0 to 7	Window bottom boundary control bits (WN20 to WN27)	Window bottom border position = $T_H \times (BC27 \times 16^2 + n)$ (n: setting value, T_H: H_{SYNC} cycle, BC27: bit 7 of block control register 2)	Inderterminate	R	W

Notes 1: Set values fit for the following condition: WN1 < WN2.
2: When OC21 of OSD control register 2 is "0", T_H is 1 H_{SYNC}.
And when "1", T_H is 2 H_{SYNC}.

Fig. 8.11.28 Window Register 2

8.11.14 OSD Output Pin Control

The OSD output pins R, G, B and OUT can also function as ports $P5_2$–$P5_5$. Set the corresponding bit of the OSD port control register (address $00CB_{16}$) to “0” to specify these pins as OSD output pins, or to “1” to specify as the general-purpose port P5.

The input polarity of the HSYNC and VSYNC, and the output polarity of signals R, G, B, OUT can be specified with the I/O polarity control register (address 00D8). Set bits to “0” to specify positive polarity; “1” to specify negative polarity (refer to Figure 8.11.14).

The structure of the OSD port control register is shown in Figure 8.11.29.

OSD Port Control Register

b7	b6	b5	b4	b3	b2	b1	b0
1	0					0	0

OSD port control register (PF) [Address $00CB_{16}$]

B	Name	Functions	After reset	R	W
0, 1	Fix these bits to “0.”		0	R	—
2	Port $P5_2$ output signal selection bit (PF2)	0 : B signal output 1 : Port $P5_2$ output	0	R	W
3	Port $P5_3$ output signal selection bit (PF3)	0 : G signal output 1 : Port $P5_3$ output	0	R	W
4	Port $P5_4$ output signal selection bit (PF4)	0 : R signal output 1 : Port $P5_4$ output	0	R	W
5	Port $P5_5$ output signal selection bit (PF5)	0 : OUT signal output 1 : Port $P5_5$ output	0	R	W
6	Fix this bit to “0.”		Indeterminate	—	W
7	Fix this bit to “1.”		0	R	W

Fig. 8.11.29 OSD Port Control Register

8.11.15 Raster Coloring Function

An entire screen (raster) can be colored by setting bits 4 to 0 of the raster color register. Since each of the R, G, B, OUT pins can be switched to raster coloring output, 8 raster colors can be obtained.
When the character color/character background color overlaps with the raster color, the color (R, G, B, OUT), specified for the character color/character background color, takes priority over the raster color. This ensures that character color/character background color is not mixed with the raster color.
The raster color register is shown in Figure 8.11.30, an example of raster coloring is shown in Figure 8.11.31.

Raster Color Register

b7	b6	b5	b4	b3	b2	b1	b0
	0	0	0				

Raster color register (RC) [Address $00D9_{16}$]

B	Name	Functions	After reset	R	W
0	Raster color R control bit (RC0)	0 : No output 1 : Output	0	R	W
1	Raster color G control bit (RC1)	0 : No output 1 : Output	0	R	W
2	Raster color B control bit (RC2)	0 : No output 1 : Output	0	R	W
3	Raster color OUT control bit (RC3)	0 : No output 1 : Output	0	R	W
4 to 6	Fix these bits to “0.”		0	R	W
7	Port function selection bit (RC7)	0 : X_{CIN}, X_{COUT} 1 : $P2_6$, $P2_7$	0	R	W

Fig. 8.11.30 Raster Color Register

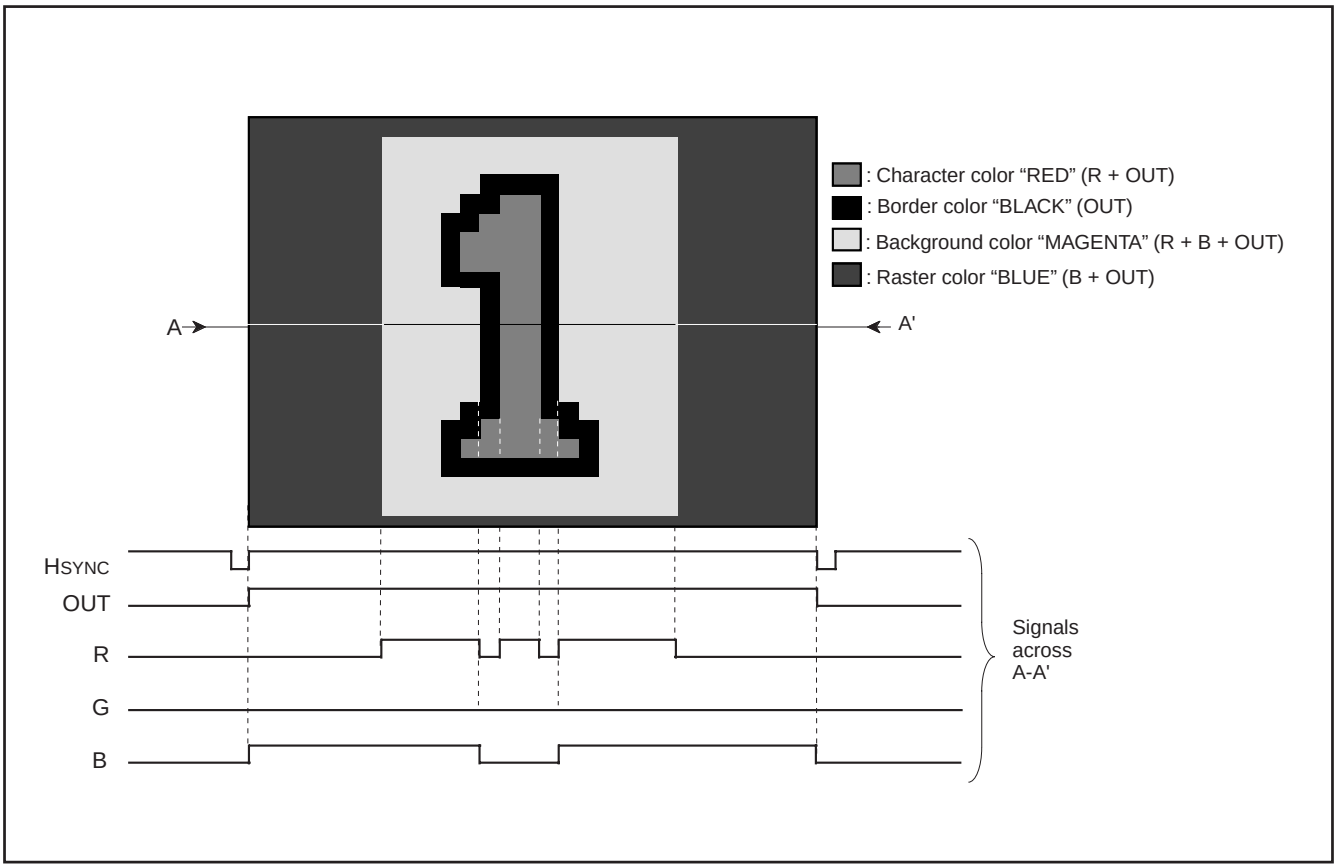

Fig. 8.11.31 Example of Raster Coloring

8.12 SOFTWARE RUNAWAY DETECT FUNCTION

This microcomputer has a function to decode undefined instructions to detect a software runaway.

When an undefined op-code is input to the CPU as an instruction code during operation, the following processing is done.

① The CPU generates an undefined instruction decoding signal.

② The device is internally reset due to the undefined instruction decoding signal.

③ As a result of internal reset, the same reset processing as in the case of ordinary reset operation is done, and the program restarts from the reset vector.

Note, however, that the software runaway detecting function cannot be disabled.

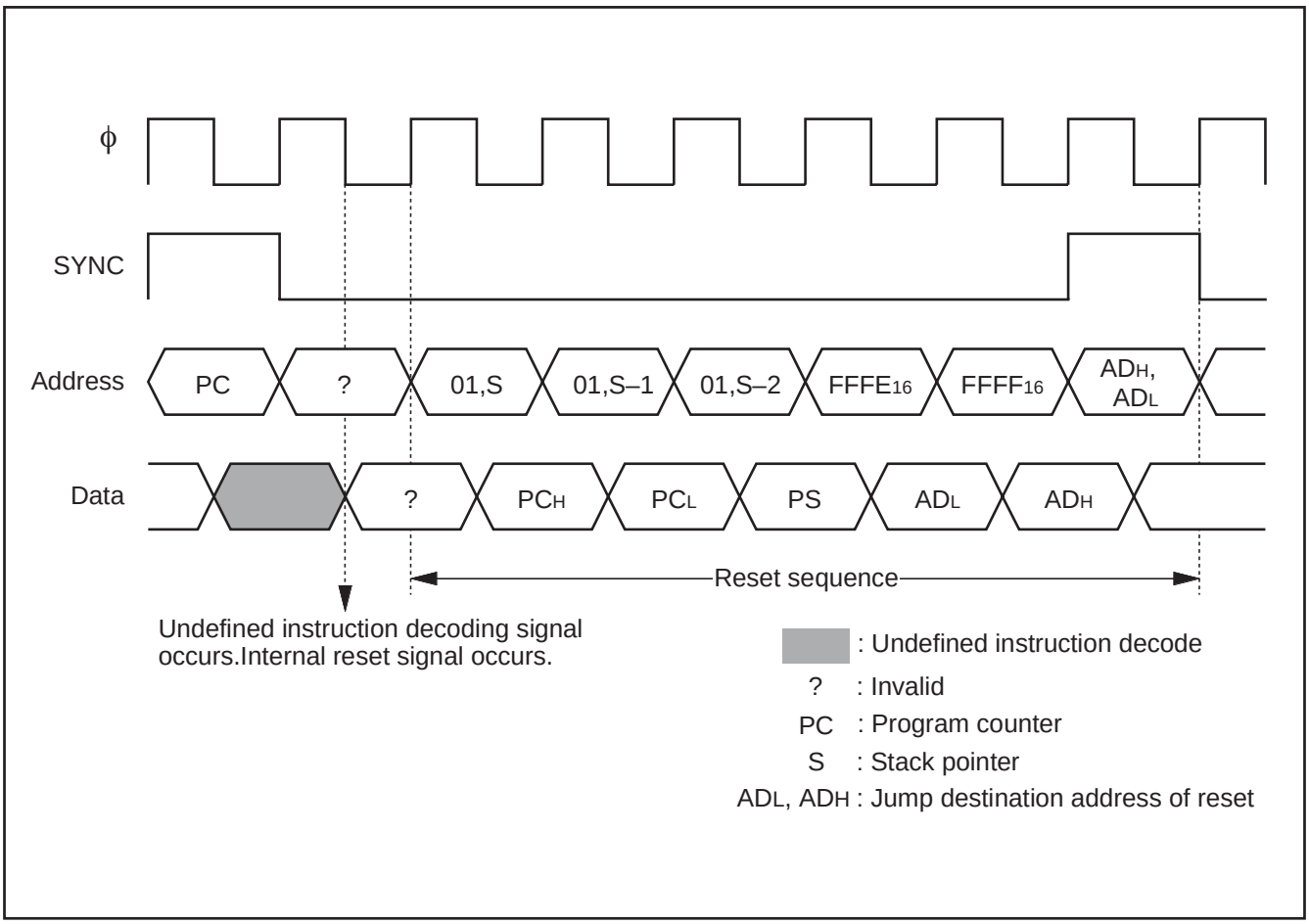

Fig.8.12.1 Sequence at Detecting Software Runaway Detection

8.13. RESET CIRCUIT

When the oscillation of a quartz-crystal oscillator or a ceramic resonator is stable and the power source voltage is 5 V ± 10 %, hold the $\overline{\text{RESET}}$ pin at LOW for 2 μs or more, then return to HIGH. Then, as shown in Figure 8.13.2, reset is released and the program starts from the address formed by using the content of address $FFFF_{16}$ as the high-order address and the content of the address $FFFE_{16}$ as the low-order address. The internal states of the microcomputer at reset are shown in Figures 8.2.2 to 8.2.5.

An example of the reset circuit is shown in Figure 8.13.1.

The reset input voltage must be kept 0.9 V or less until the power source voltage surpasses 4.5 V.

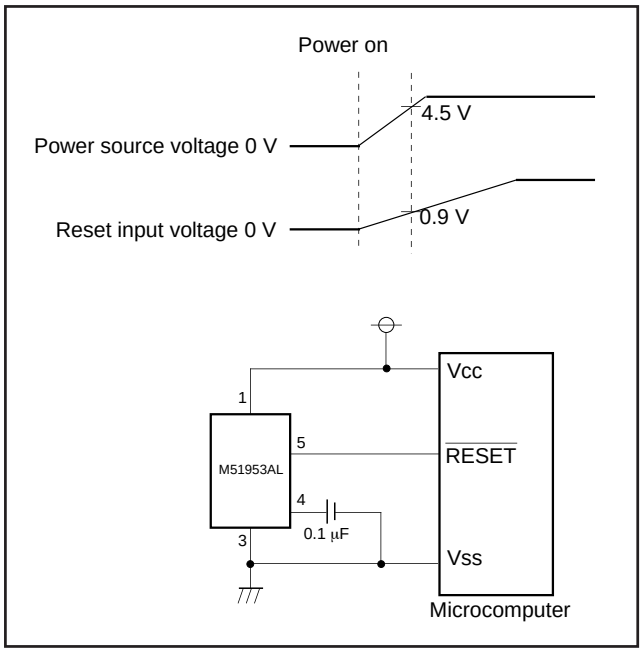

Fig.8.13.1 Example of Reset Circuit

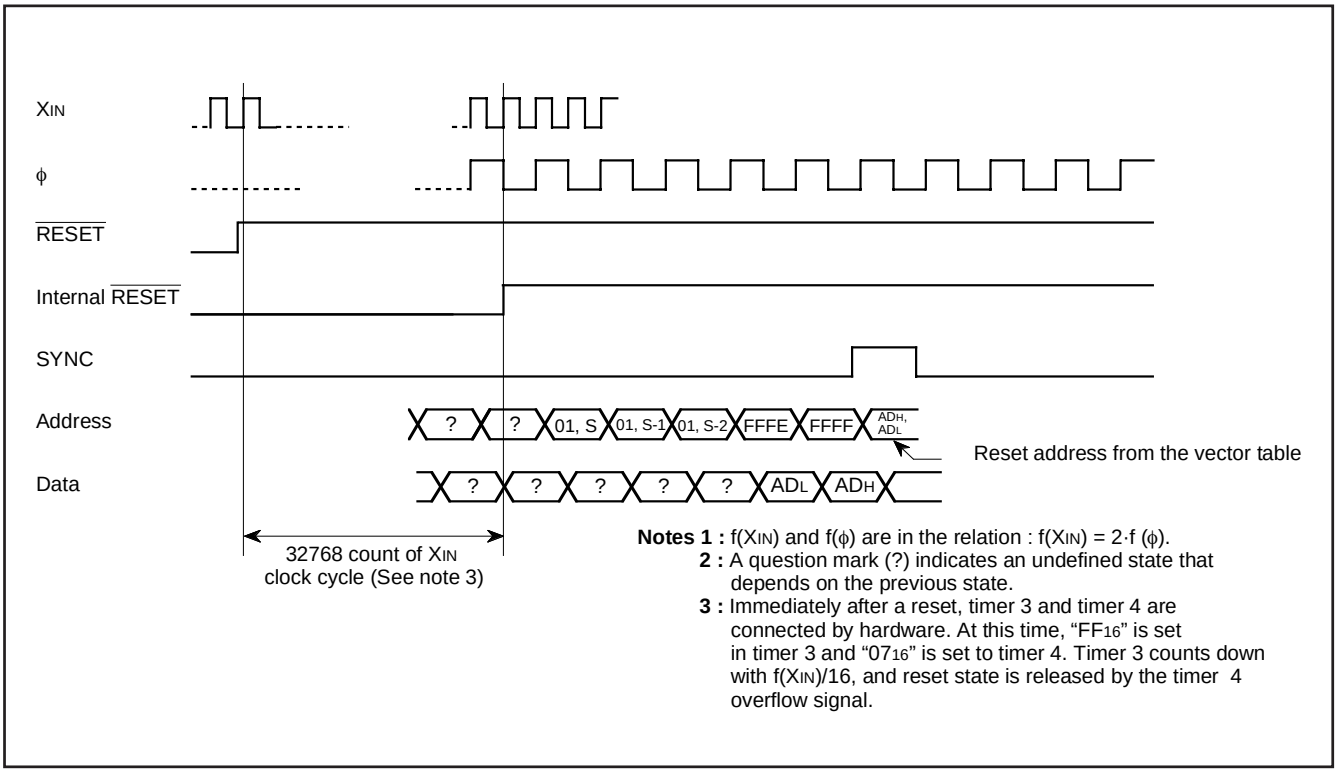

Fig.8.13.2 Reset Sequence

8.14 CLOCK GENERATING CIRCUIT

This microcomputer contains two internal oscillator circuits, one oscillator circuit for the main clock and XCIN-XCOUT for the subclock. The main clock and OSD clock are generated based on the reference clock from the FSCIN pin. The subclock can be obtained by connecting a resonator between XCIN and XCOUT to configure an oscillator circuit. Because the resistance-capacitance time constants vary with each resonator, be sure to use the value recommended by the resonator manufacturer. The subclock can also be supplied directly from the FSCIN pin. For the FILT pin used to generate the main clock, insert the filter shown in Figure 8.1.4.1. Because no resistors are included between XCIN and XCOUT, please insert feedback resistors external to the chip.

The OSD clock can be chosen to be the data slicer clock (approx. 26 MHz) that is output from the data slicer.

After reset, the internal clock f is derived from f(XIN) by dividing it by 2. Immediately after power-on, the XIN and XCIN clocks both start oscillating. To select low-speed mode for the internal clock f, set the CPU Mode Register bit 7 to 1.

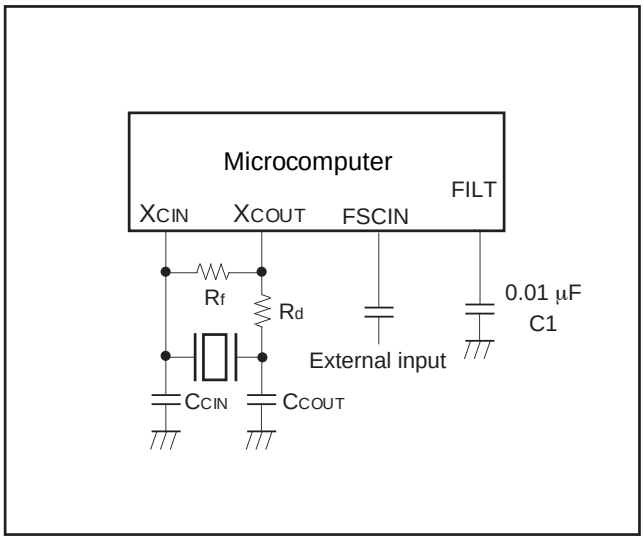

Fig.8.14.1 Ceramic Resonator Circuit Example

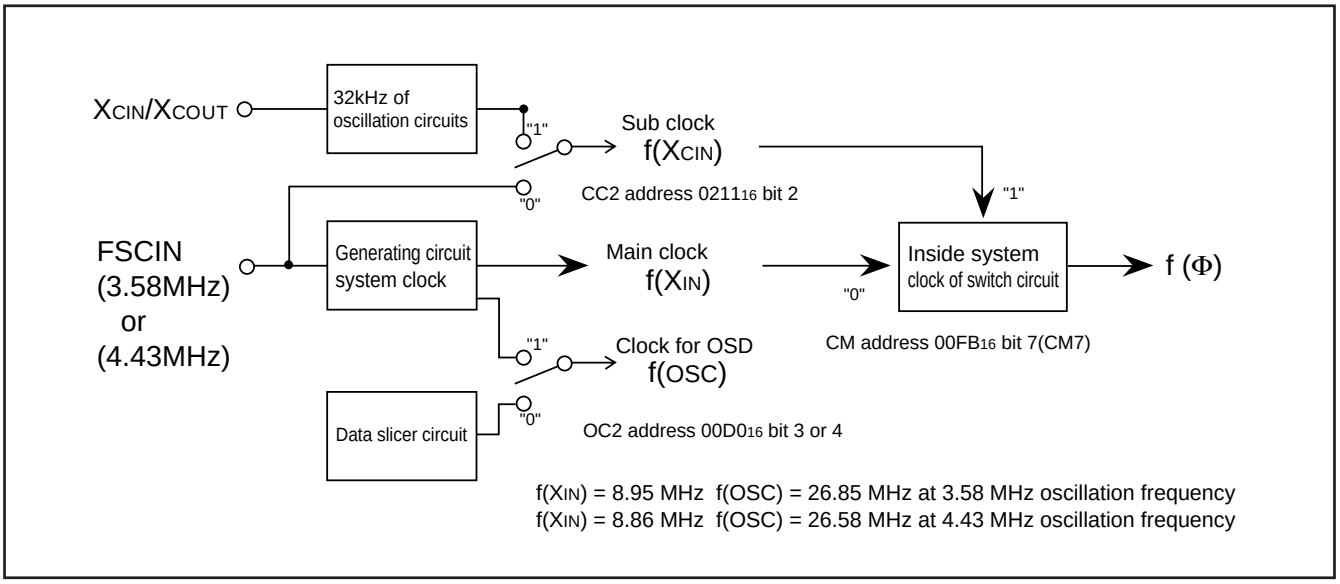

Fig.8.14.2 Clock Generation Circuit

Clock frequency set register

b7	b6	b5	b4	b3	b2	b1	b0

Clock frequency set register(CFS) [Address 0210_{16}]

B	Name	Functions	After reset	R W
0 to 7	Clock frequency bit (CFS 0 to 7)		0E	R W
	FSCIN=3.58MHz	Set to $0E_{16}$		
	FSCIN=4.43MHz	Set to $0B_{16}$		

Reference clock input	Setting value	Main clock frequency f(X_{IN}) [MHz]	OSD clock frequency f($_{OSC}$) [MHz]
FSCIN=3.58MHz	0E	8.95	26.85
FSCIN=4.43MHz	0B	8.86	26.58

Note: Do not set other than the values shown above to CFS.

Fig.8.14.3 Clock Frequency Setting Register

Clock control register 1

b7	b6	b5	b4	b3	b2	b1	b0
0	0	0	0	0	0	0	

Clock control register 1 (CC1) [Address $00CD_{16}$]

B	Name	Functions	After reset	R W
0	System clock generating circuit control bit (CC10)	0: Operation 1: Stop	0	R W
1 to 7	Fix these bits to "0"		0	R W

Fig.8.14.4 Clock Control Register 1

Clock control register 2

b7	b6	b5	b4	b3	b2	b1	b0
0	0	0	0	1		0	0

Clock control register 2 (CC2) [Address 0211_{16}]

B	Name	Functions	After reset	R W
0,1	Fix these bits to "0"		0	R W
2	Clock sauce switch bit (Note) (CC22)	0: FSCIN input signal 1: X_{CIN}-X_{COUT}	0	R W
3	Fix this bit to "1"		0	R W
4 to 7	Fix these bits to "0"		0	R W

Note: This bit is valid when the CPU Mode Register (address $00FB_{16}$) bit 7 (CM7) is set to 1.

Fig.8.14.5 Clock Control Register 2

8.14.1 OSCILLATION CONTROL

(1) Stop Mode

The built-in clock generating circuit is shown in Figure 8.14.2. When the STP instruction is executed, the internal clock ϕ stops at HIGH. At the same time, timers 3 and 4 are connected by hardware and "FF16" is set in timer 3 and "0716" is set in timer 4. Select f(XIN)/16 or f(XCIN)/16 as the timer 3 count source (set both bit 0 of timer mode register 2 and bit 6 at address 00C716 to "0" before the execution of the STP instruction). Moreover, set the timer 3 and timer 4 interrupt enable bits to disabled ("0") before execution of the STP instruction. The oscillator restarts when an external interrupt is accepted. However, the internal clock ϕ keeps its HIGH level until timer 4 overflows, allowing time for oscillation stabilization when a quartz-crystal oscillator is used.

By settimg bit 7 of timer return setting register (address 00CC16) to "1, " an arbitrarary value can be set to timer 3 and timer 4.

Bit 7 of clock control register 3 (address 021216) can switch Port P10 pin and the CLKCONT. When CLKCONT pin is selected, "H" is output normally. When an extenal interrupt is recieved in the STP state, the CLKCONT pin goes back to "H" output.

(2) Wait Mode

When the WIT instruction is executed, the internal clock ϕ stops in the HIGH level but the oscillator continues running. This wait state is released at reset or when an interrupt is accepted (See note). Since the oscillator does not stop, the next instruction can be executed immediately.

Note: In the wait mode, the following interrupts are invalid.

- VSYNC interrupt
- OSD interrupt
- All timer interrupts using external clock input from port pin as count source
- All timer interrupts using f(XIN)/2 or f(XCIN)/2 as count source
- All timer interrupts using f(XIN)/4096 or f(XCIN)/4096 as count source
- f(XIN)/4096 interrupt
- Multi-master I2C-BUS interface interrupt
- Data slicer interrupt
- A-D conversion interrupt

(3) Low-speed Mode

If the internal clock is generated from the sub-clock (XCIN), a low power consumption operation can be realized by stopping only the main clock XIN. To stop the main clock, set bit 6 (CM6) of the CPU mode register (00FB16) to "1." When the main clock XIN is restarted, the program must allow enough time for oscillation to stabilize.

Note that in the low-power-consumption mode the XCIN-XCOUT drivability can be reduced, allowing even lower power consumption. To reduce the XCIN-XCOUT drivability, clear bit 5 (CM5) of the CPU mode register (00FB16) to "0." At reset, this bit is set to "1" and strong drivability is selected to help the oscillation to start. When executing an STP instruction, set this bit to "1" by software before initiating the instruction.

Clock control register 3

b7	b6	b5	b4	b3	b2	b1	b0
	0		0	0	0	0	0

Clock control register 3 (CC3) [Address 021216]

B	Name	Functions	After reset	R	W
0 to 4	Fix these bits to "0"		0	R	W
5	R,G,B,OUT Output amplitude level selection bit (CC35)	0: 0V–VCC 1: 0V–About 0.6VCC	0	R	W
6	Fix this bit to "0"		0	R	W
7	P10 function-selection bit (CC37)	(Note) 0: Clock control signal 1: P10 I/O	0	R	W

Note: When used as the clock control signal, set the Port 1 Direction Register (address 00C316) bit 0 to 1.

Fig.8.14.6 Clock Control Register 3

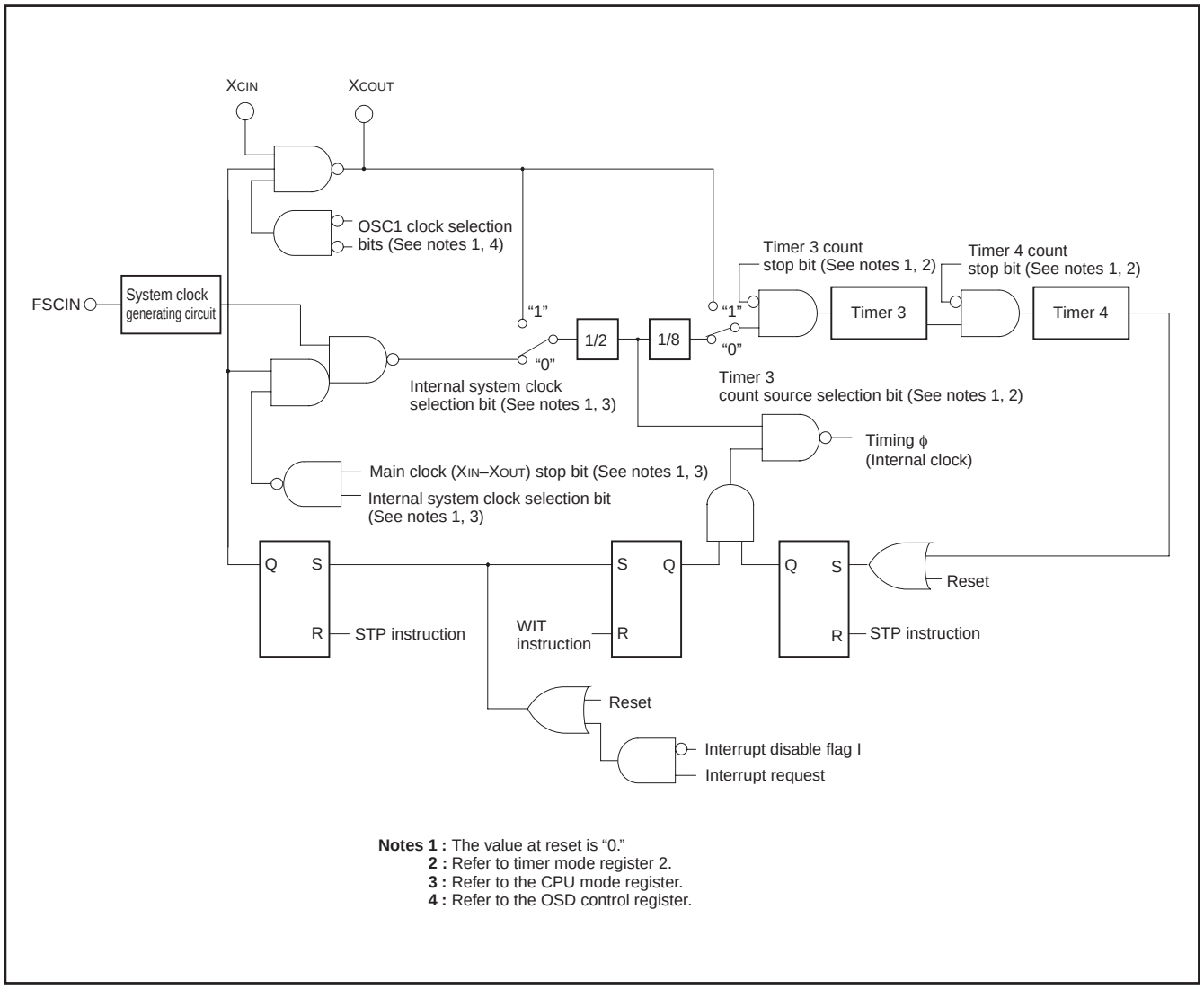

Notes 1 : The value at reset is "0."
2 : Refer to timer mode register 2.
3 : Refer to the CPU mode register.
4 : Refer to the OSD control register.

Fig.8.14.7 Clock Generating Circuit Block Diagram

1. When Reference Clock from FSCIN is Used

Clock Control Register 2 (address 0211$_{16}$) bit 2 = "0"

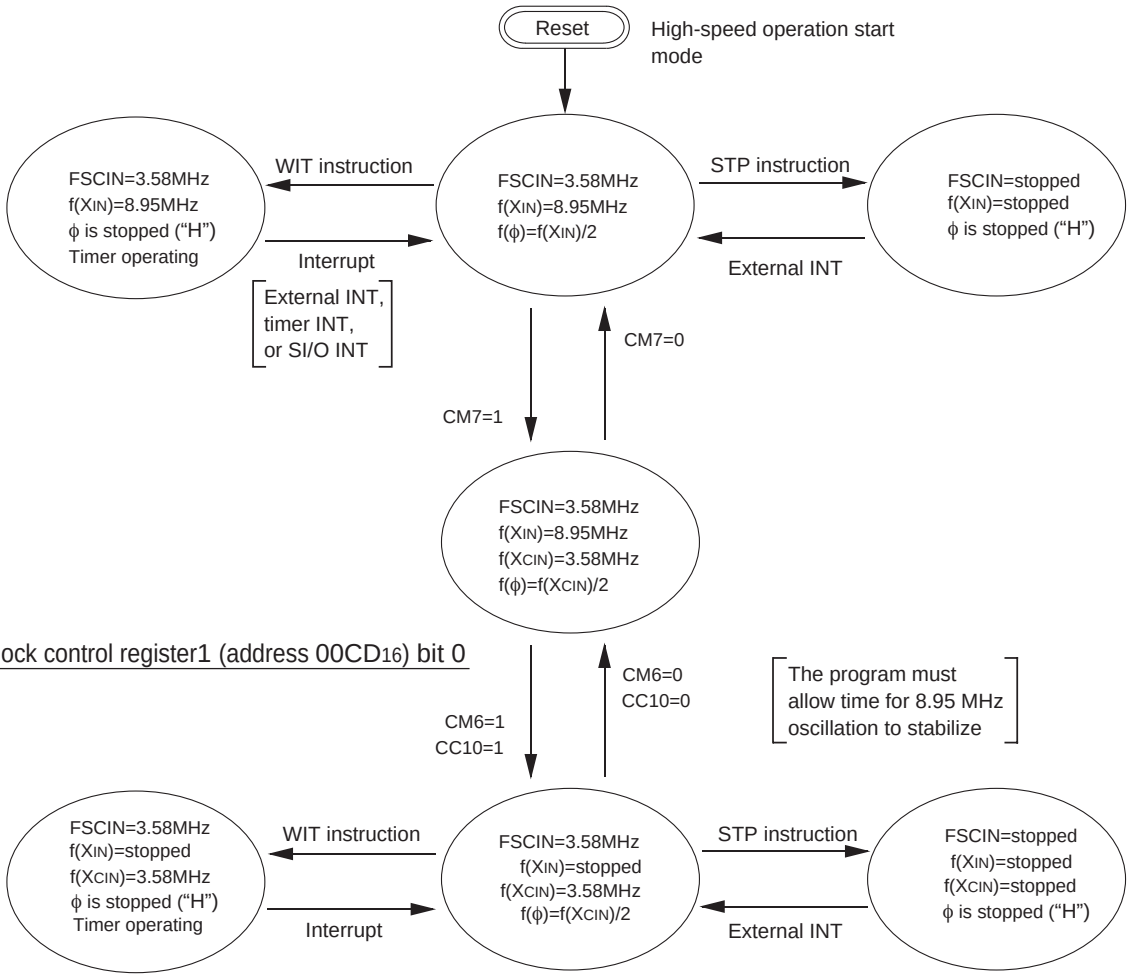

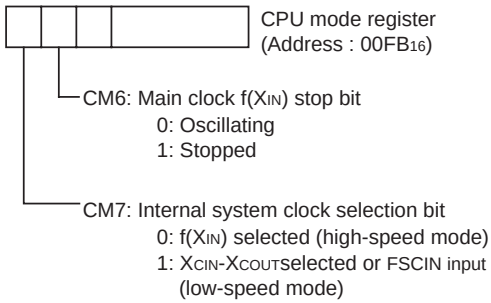

The above example assumes that the FSCIN pin has 3.58 MHz applied to it. The ϕ indicates the internal clock.

Fig.8.14.8 State Transitions of System Clock (1)

2. When using the 32 kHz oscillating

Clock Control Register 2 (address 0211$_{16}$) bit 2 = "1"

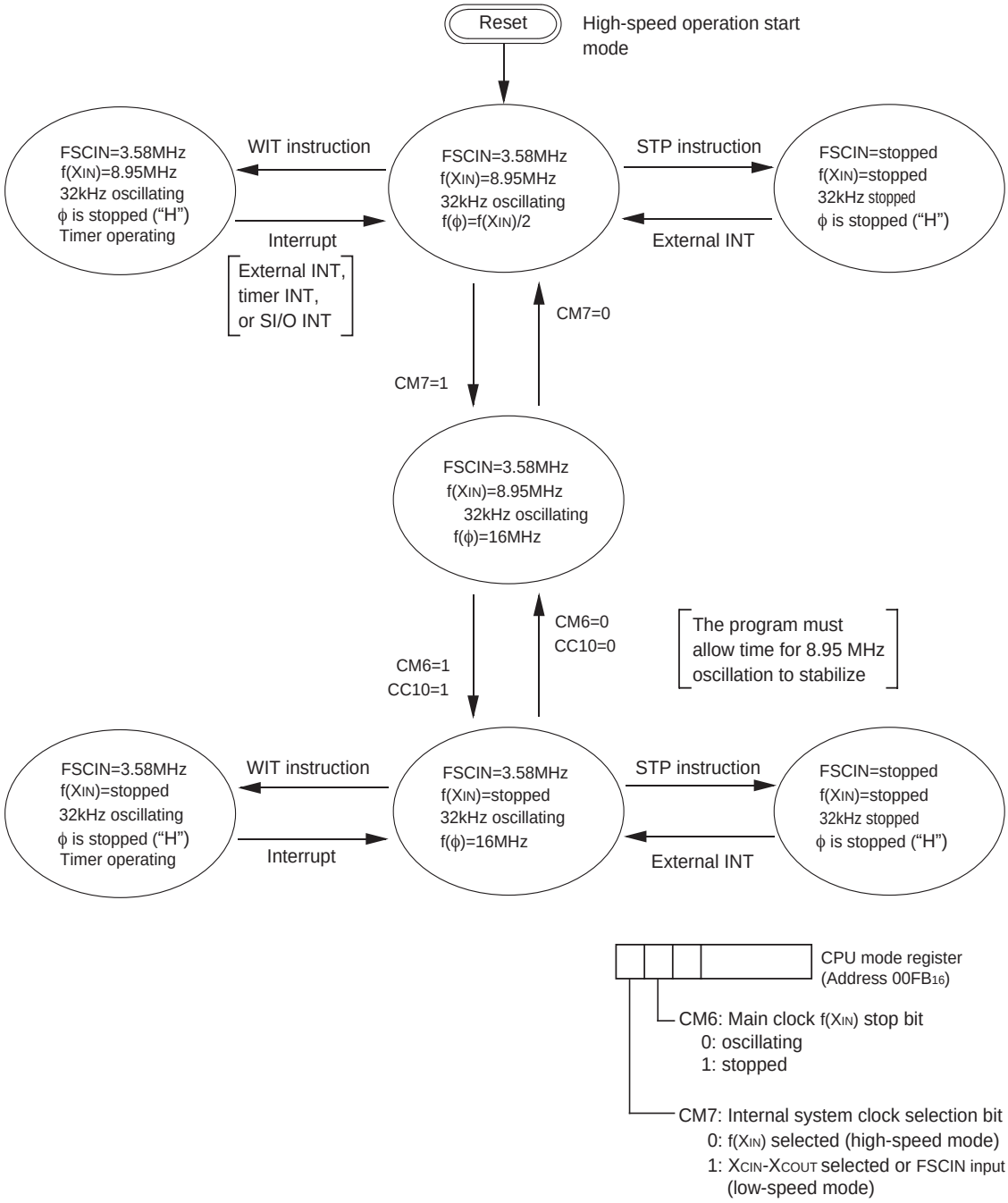

The above example assumes that the FSCIN and XCIN pins have 3.58 MHz and 32 kHz signals applied, respectively.
The ϕ indicates the internal clock.

Fig.8.14.9 State Transitions of System Clock (2)

8.15 AUTO-CLEAR CIRCUIT

When a power source is supplied, the auto-clear function will operate by connecting the following circuit to the $\overline{\text{RESET}}$ pin.

Circuit example 1

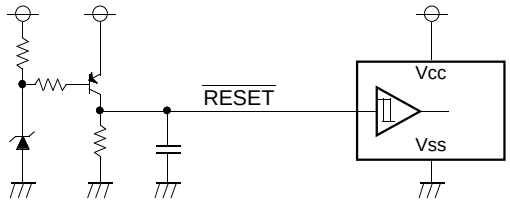

Circuit example 2

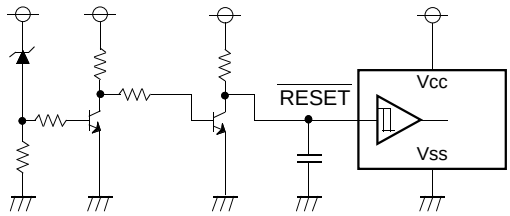

Note : Make the level change from “L” to “H” at the point at which the power source voltage exceeds the specified voltage.

Fig.8.15.1 Auto-clear Circuit Example

8.16 ADDRESSING MODE

The memory access is reinforced with 17 kinds of addressing modes. Refer to SERIES 740 <Software> User’s Manual for details.

8.17 MACHINE INSTRUCTIONS

There are 71 machine instructions. Refer to SERIES 740 <Software> User’s Manual for details.

9. TECHNICAL NOTES

• The divide ratio of the timer is 1/(n+1).

- Even though the BBC and BBS instructions are executed immediately after the interrupt request bits are modified (by the program), those instructions are only valid for the contents before the modification. At least one instruction cycle is needed (such as an NOP) between the modification of the interrupt request bits and the execution of the BBC and BBS instructions.
- After the ADC and SBC instructions are executed (in the decimal mode), one instruction cycle (such as an NOP) is needed before the SEC, CLC, or CLD instruction is executed.
- An NOP instruction is needed immediately after the execution of a PLP instruction.
- In order to avoid noise and latch-up, connect a bypass capacitor (≈ 0.1μF) directly between the V_{CC} pin–V_{SS} pin and the V_{CC} pin–CNV_{SS} pin, using a thick wire.
- Characteristic value, margin of operation, etc. of versions with built-in EPROM and built-in mask ROM may differ from each other within the limits of the electrical characteristics in terms of manufacturing process, built-in ROM, difference of a layout pattern, etc.
  Carry out and check an examination equivalent to the system evaluation examination carried out on the EPROM version when replacing it with the mask ROM version.

10. ABSOLUTE MAXIMUM RATINGS

Symbol	Parametear		Conditions	Ratings	Unit
V_{CC}	Power source voltage	V_{CC}	All voltages are based on V_{SS}. Output transistors are cut off.	–0.3 to 6	V
V_I	Input voltage	CNV_{SS}		–0.3 to 6	V
V_I	Input voltage	$P0_0$–$P0_7$, $P1_0$–$P1_6$, $P2_0$–$P2_7$, $P3_0$, $P3_1$, $P5_0$, $P5_1$, $\overline{RESET}$, CV_{IN}		–0.3–V_{CC} + 0.3	V
V_O	Output voltage	$P0_6$, $P0_7$, $P1_0$–$P1_6$, $P2_0$–$P2_7$, $P3_0$, $P3_1$, $P5_2$–$P5_5$		–0.3–V_{CC} + 0.3	V
I_{OH}	Circuit current	$P1_0$–$P1_6$, $P2_0$–$P2_7$, $P3_0$, $P3_1$, $P5_2$–$P5_5$,		0 to 1 (See note 1)	mA
I_{OL1}	Circuit current	$P0_0$–$P0_7$, $P1_0$–$P1_5$, $P1_6$, $P2_0$–$P2_3$ $P5_2$–$P5_5$,		0 to 2 (See note 2)	mA
I_{OL2}	Circuit current	$P1_1$–$P1_4$, $P3_0$, $P3_1$		0 to 6 (See note 2)	mA
I_{OL4}	Circuit current	$P2_4$–$P2_7$		0 to 10 (See note 3)	mA
P_d	Power dissipation		T_a = 25 °C	550	mW
T_{opr}	Operating temperature			–10 to 70	°C
T_{stg}	Storage temperature			–40 to 125	°C

11. RECOMMENDED OPERATING CONDITIONS (T_a = –10 °C to 70 °C, V_{CC} = 5 V ± 10 %, unless otherwise noted)

Symbol	Parametear		Limits			Unit
			Min.	Typ.	Max.	
V_{CC}	Power source voltage (See note 4)		4.5	5.0	5.5	V
V_{SS}	Power source voltage		0	0	0	V
V_{IH1}	HIGH Input voltage	$P0_0$–$P0_7$, $P1_0$–$P1_6$, $P2_0$–$P2_7$, $P3_0$, $P3_1$, $P5_0$, $P5_1$, $\overline{RESET}$	0.8V_{CC}		V_{CC}	V
V_{IH2}	HIGH Input voltage	SCL1, SCL2, SCL3, SDA1, SDA2 , SDA3 (When using I^2C-BUS)	0.7V_{CC}		V_{CC}	V
V_{IL1}	LOW Input voltage	$P0_0$–$P0_7$, $P1_0$–$P1_6$, $P2_0$–$P2_7$, $P3_0$, $P3_1$	0		0.4V_{CC}	V
V_{IL2}	LOW Input voltage	SCL1, SCL2, SCL3, SDA1, SDA2, SDA3 (When using I^2C-BUS)	0		0.3V_{CC}	V
V_{IL3}	LOW Input voltage (See note 6)	$P5_0$, $P5_1$,$\overline{RESET}$, TIM2, TIM3, INT1, INT2, INT3, S_{IN}, S_{CLK}	0		0.2V_{CC}	V
I_{OH}	HIGH average output current (See note1)	$P1_0$–$P1_6$, $P2_0$–$P2_7$, $P3_0$, $P3_1$, $P5_2$–$P5_5$			1	mA
I_{OL1}	HIGH average output current (See note2)	$P0_0$–$P0_7$, $P1_0$, $P1_5$, $P1_6$, $P2_0$–$P2_3$, $P5_2$–$P5_5$			2	mA
I_{OL2}	LOW average output current (See note 2)	$P1_1$–$P1_4$, $P3_0$, $P3_1$			6	mA
I_{OL3}	LOW average output current (See note 3)	$P2_4$–$P2_7$			10	mA
f(X_{CIN})	Oscillation frequency (for sub-clock operation)	X_{CIN}	29	32	35	kHz
f_{hs1}	Input frequency	TIM2, TIM3, INT1, INT2, INT3			100	kHz
f_{hs2}	Input frequency	S_{CLK}			1	MHz
f_{hs3}	Input frequency	SCL1, SCL2			400	kHz
f_{hs4}	Input frequency	Horizontal sync. signal of video signal	15.262	15.734	16.206	kHz
V_I	Input amplitude video signal	CV_{IN}	1.5	2.0	2.5	V
F_{SCIN}	Oscillation reference frequency		–	3.58 or 4.43	–	MHz
V(F_{SCIN})	Input amplitude		–	1.0V	–	V

12. ELECTRIC CHARACTERISTICS (V_{CC} = 5 V ± 10 %, V_{SS} = 0 V, f(X_{IN}) = 8.95 MHz, T_a = –10 °C to 70 °C, unless otherwise noted)

Symbol	Parametear		Test conditions		Limits Min.	Limits Typ.	Limits Max.	Unit	Test circuit
I_{CC}	Power source current	System operation	V_{CC} = 5.5V, f(X_{IN}) = 8.95MHz	OSD OFF Data slicer OFF		15	30	mA	1
				OSD ON Data slicer ON		30	45		
			V_{CC} = 5.5V, f(X_{IN}) = 0, f(X_{CIN}) = 32kHz, OSD OFF, Data slicer OFF, Low-power dissipation mode set (CM5 = "0", CM6 = "1")			60	200	μA	
		Wait mode	V_{CC} = 5.5 V, f(X_{CIN}) = 3.58 MHz			1	2	mA	
			V_{CC} = 5.5 V, f(X_{IN}) = 0, f(X_{CIN}) = 32 kHz, Low-power dissipation mode set (CM5 = "0", CM6 = "1")			25	100	μA	
		Stop mode	V_{CC} = 5.5V, f(X_{IN}) = 0, f(X_{CIN}) = 0			1	10		
V_{OH}	HIGH output voltage	$P1_0$–$P1_6$, $P2_0$–$P2_7$, $P3_0$, $P3_1$, $P5_2$–$P5_5$,	V_{CC} = 4.5 V, I_{OH} = –0.5 mA		2.4			V	2
V_{OL}	LOW output voltage	$P0_0$–$P0_7$, $P1_0$, $P1_5$, $P1_6$, $P2_0$–$P2_3$, $P5_2$–$P5_5$	V_{CC} = 4.5 V, I_{OL} = 0.5 mA				0.4	V	
	LOW output voltage	$P2_4$– $P2_7$	V_{CC} = 4.5 V, I_{OL} = 10.0 mA				3.0		
	LOW output voltage	$P1_1$–$P1_4$, $P3_0$, $P3_2$	V_{CC} = 4.5 V	I_{OL} = 3 mA			0.4		
				I_{OL} = 6 mA			0.6		
V_{T+} –V_{T-}	Hysteresis (See note 6) $\overline{RESET}$, $P5_0$, $P5_1$, INT1, INT2, INT3, TIM2, TIM3, S_{IN}, S_{CLK}, SCL1, SCL2, SCL3, SDA1, SDA2, SDA3		V_{CC} = 5.0 V			0.5	1.3	V	3
I_{IZH}	HIGH input leak current $P0_0$–$P0_7$, $P1_0$–$P1_6$, $P2_0$–$P2_7$, $P3_0$, $P3_1$, $\overline{RESET}$, $P5_0$, $P5_1$,		V_{CC} = 5.5 V, V_I = 5.5 V				5	μA	4
I_{IZL}	HIGH input leak current $P0_0$–$P0_7$, $P1_0$–$P1_6$, $P2_0$–$P2_7$, $P3_0$, $P3_1$, $P5_0$, $P5_1$, $\overline{RESET}$		V_{CC} = 5.5 V, V_I = 0 V				5	μA	4
R_{BS}	I^2C-BUS • BUS switch connection resistor (between SCL1 and SCL2, SDA1 and SDA2)		V_{CC} = 4.5 V				130	Ω	5

Notes 1: The total current that flows out of the IC must be 20 mA or less.
2: The total input current to IC (I_{OL1} + I_{OL2}) must be 30 mA or less.
3: The total average input current for ports $P2_4$–$P2_7$ and AV_{CC}–V_{SS} to IC must be 20 mA or less.
4: Connect 0.1 μF or more capacitor externally between the power source pins V_{CC}–V_{SS} so as to reduce power source noise.
Also connect 0.1 μF or more capacitor externally between the pins V_{CC}–CNV_{SS}.
5: $P0_6$, $P0_7$, $P1_6$, $P2_3$, $P2_4$, $P2_5$ have hysteresis when used as interrupt input pins or timer input pins. $P1_1$–$P1_4$, $P3_0$, $P3_1$ have hysteresis when used as multi-master I^2C-BUS interface ports. $P2_0$–$P2_2$ have hysteresis when used as serial I/O pins.
6: Pin names in each parameter are described as below.
(1) Dedicated pins: dedicated pin names.
(2) Double-/triple-function ports
• Same limits: I/O port name.
• Functions other than ports vary from I/O port limits: function pin name.

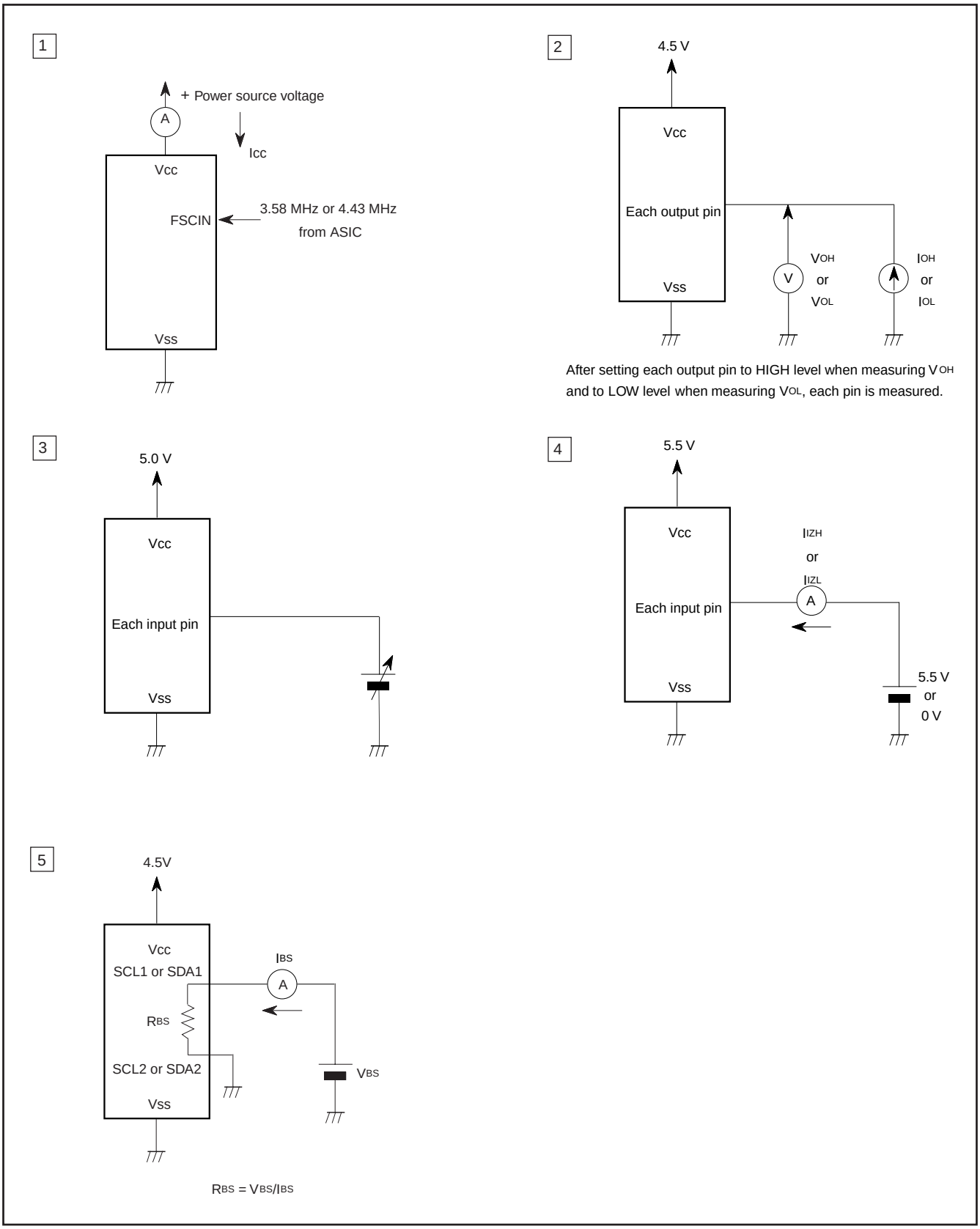

Fig.12.1 Measurement Circuits

13. A-D CONVERTER CHARACTERISTICS

(V_{CC} = 5 V ± 10 %, V_{SS} = 0 V, f(X_{IN}) = 8.95 MHz, T_a = –10 °C to 70 °C, unless otherwise noted)

Symbol	Parameter	Test conditions	Limits			Unit
			Min.	Typ.	Max.	
—	Resolution				7	bits
—	Non-linearity error				±1.5	LSB
—	Differencial non-linearity error				±0.9	LSB
V_{0T}	Zero transition error	I_{OL} (SUM) = 0 mA			2	LSB
V_{FST}	Full-scale transition error				–2	LSB

14. MULTI-MASTER I²C-BUS BUS LINE CHARACTERISTICS

Symbol	Parameter	Standard clock mode		High-speed clock mode		Unit
		Min.	Max.	Min.	Max.	
t_{BUF}	Bus free time	4.7		1.3		µs
$t_{HD;STA}$	Hold time for START condition	4.0		0.6		µs
t_{LOW}	LOW period of SCL clock	4.7		1.3		µs
t_R	Rising time of both SCL and SDA signals		1000	20+0.1C_b	300	ns
$t_{HD;DAT}$	Data hold time	0		0	0.9	µs
t_{HIGH}	HIGH period of SCL clock	4.0		0.6		µs
t_F	Falling time of both SCL and SDA signals		300	20+0.1C_b	300	ns
$t_{SU;DAT}$	Data set-up time	250		100		ns
$t_{SU;STA}$	Set-up time for repeated START condition	4.7		0.6		µs
$t_{SU;STO}$	Set-up time for STOP condition	4.0		0.6		µs

Note: C_b = total capacitance of 1 bus line

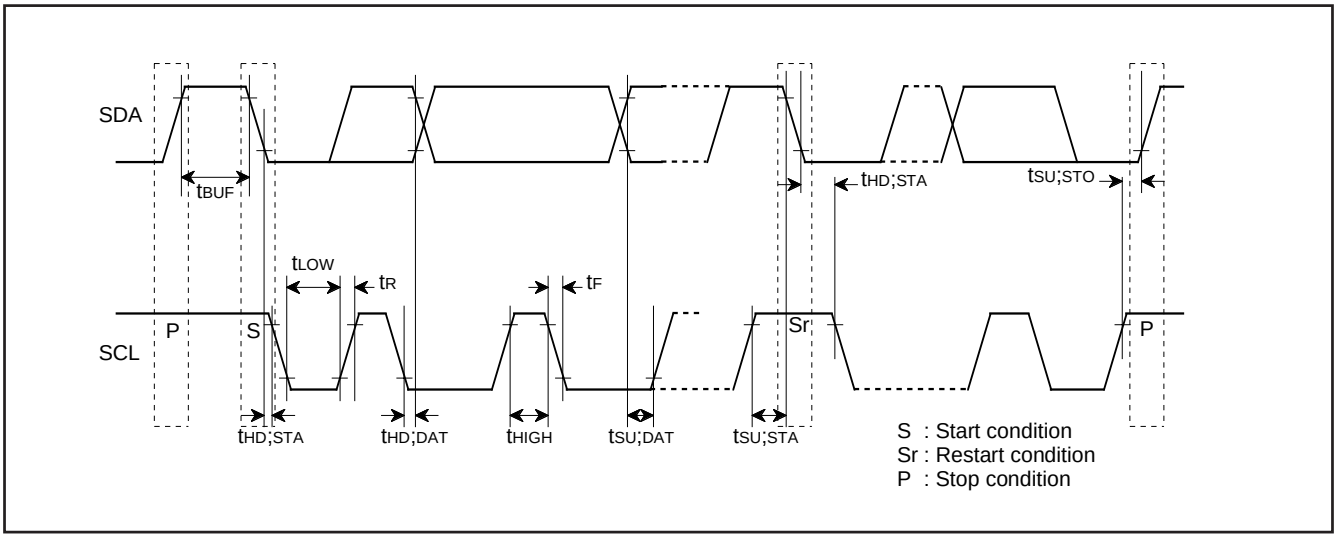

Fig.14.1 Definition Diagram of Timing on Multi-master I²C-BUS

15. PROM PROGRAMMING METHOD

The built-in PROM of the One Time PROM version (blank) and the built-in EPROM version can be read or programmed with a general-purpose PROM programmer using a special programming adapter.

Product	Name of Programming Adapter
M37150EFFP	PCA7450FP

The PROM of the One Time PROM version (blank) is not tested or screened in the assembly process nor any following processes. To ensure proper operation after programming, the procedure shown in Figure 15.1 is recommended to verify programming.

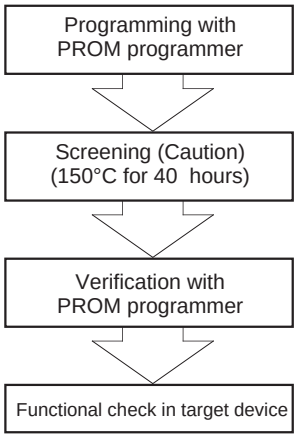

Caution : The screening temperature is far higher than the storage temperature. Never expose to 150°C exceeding 100 hours.

Fig. 15.1 Programming and Testing of One Time PROM Version

16. DATA REQUIRED FOR MASK ORDERS

The following are necessary when ordering a mask ROM product:

- Mask ROM Order Confirmation Form
- Mark Specification Form
- Data to be written to ROM, in EPROM form (three identical copies) or FDK
  When using EPROM:
  Three sets of 32-pin DIP Type 27C101

17. ONE TIME PROM VERSION M37150EFFP MARKING

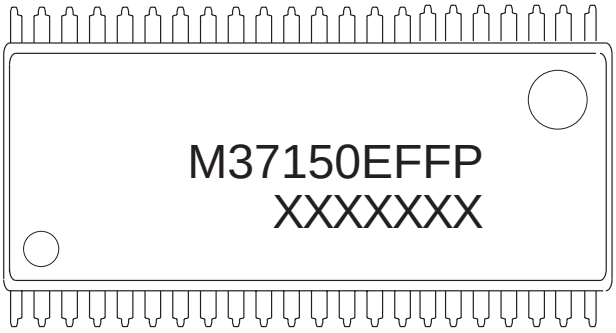

XXXXXXX is lot number

18. APPENDIX
Pin Configuration (TOP VIEW)

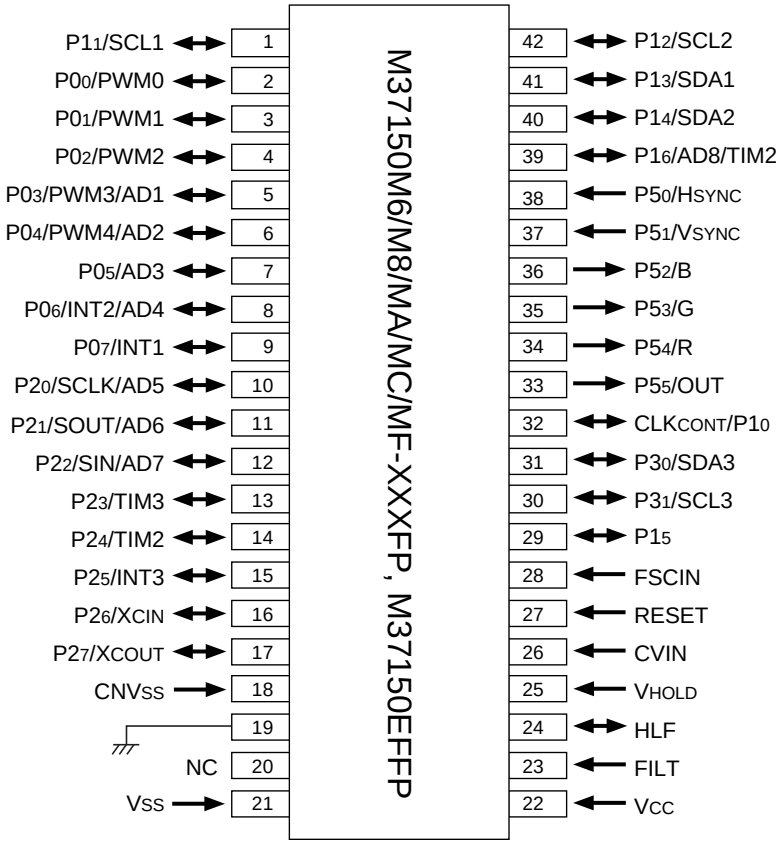

Outline 42P2R

* Open 20-pin.

Memory Map

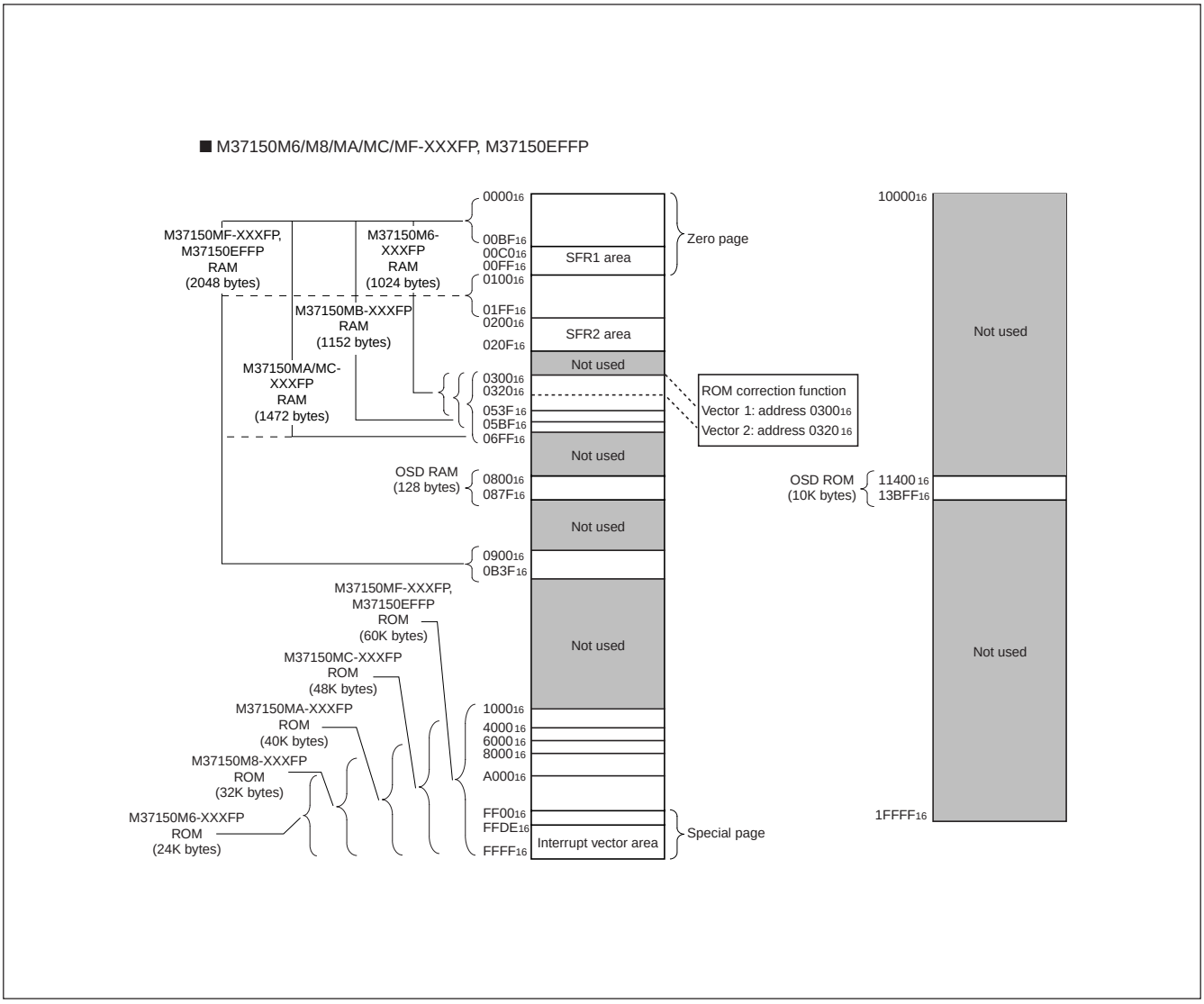
■ M37150M6/M8/MA/MC/MF-XXXFP, M37150EFFP
M37150MF-XXXFP, M37150EFFP RAM (2048 bytes)
M37150M6-XXXFP RAM (1024 bytes)
M37150MB-XXXFP RAM (1152 bytes)
M37150MA/MC-XXXFP RAM (1472 bytes)
OSD RAM (128 bytes)
M37150MF-XXXFP, M37150EFFP ROM (60K bytes)
M37150MC-XXXFP ROM (48K bytes)
M37150MA-XXXFP ROM (40K bytes)
M37150M8-XXXFP ROM (32K bytes)
M37150M6-XXXFP ROM (24K bytes)
0000₁₆
00BF₁₆
00C0₁₆
00FF₁₆
0100₁₆
01FF₁₆
0200₁₆
020F₁₆
0300₁₆
0320₁₆
053F₁₆
05BF₁₆
06FF₁₆
0800₁₆
087F₁₆
0900₁₆
0B3F₁₆
1000₁₆
4000₁₆
6000₁₆
8000₁₆
A000₁₆
FF00₁₆
FFDE₁₆
FFFF₁₆
SFR1 area
SFR2 area
Not used
Not used
Not used
Not used
Interrupt vector area
Zero page
Special page
ROM correction function
Vector 1: address 0300₁₆
Vector 2: address 0320₁₆
10000₁₆
Not used
OSD ROM (10K bytes)
11400₁₆
13BFF₁₆
Not used
1FFFF₁₆

Memory Map of Special Function Register (SFR)

■ SFR1 Area (addresses $C0_{16}$ to DF_{16})

<Bit allocation>

- [ ] : Function bit
- [Name] : Function bit
- [ ] : No function bit
- [0] : Fix this bit to "0" (do not write "1")
- [1] : Fix this bit to "1" (do not write "0")

<State immediately after reset>

- [0] : "0" immediately after reset
- [1] : "1" immediately after reset
- [?] : Indeterminate immediately after reset

Address	Register	Bit allocation b7							b0	State immediately after reset b7							b0
$C0_{16}$	Port P0(P0)									?							
$C1_{16}$	Port P0 direction register (D0)									00_{16}							
$C2_{16}$	Port P1(P1)	0								?	?	0	?	?	?	?	?
$C3_{16}$	Port P1 direction register (D1)	0								0	0	1	0	0	0	0	1
$C4_{16}$	Port P2(P2)									?							
$C5_{16}$	Port P2 direction register (D2)									00_{16}							
$C6_{16}$	Port P3(P3)					BSEL21	BSEL20	P31	P30	0	0	0	0	0	0	?	?
$C7_{16}$	Port P3 direction register (D3)	T2SC	T3SC			0	OUTS	P31D	P30D	00_{16}							
$C8_{16}$		0	0	0	0	0	0	0	0	?							
$C9_{16}$		0	0	1	1	1	1	1	1	?							
CA_{16}	Port P5(P5)	0	0					0	0	?							
CB_{16}	OSD port control register (PF)	1	0	PF5	PF4	PF3	PF2	0	0	0	?	0	0	0	0	0	0
CC_{16}	Timer return set register (TMS)	TMS	0	1	0	0	0	0	0	00_{16}							
CD_{16}	Clock control register 1 (CC1)	0	0	0	0	0	0	0	CC10	00_{16}							
CE_{16}	Caption data register 3 (CD3)	CDL27	CDL26	CDL25	CDL24	CDL23	CDL22	CDL21	CDL20	?							
CF_{16}	Caption data register 4 (CD4)	CDH27	CDH26	CDH25	CDH24	CDH23	CDH22	CDH21	CDH20	?							
$D0_{16}$	OSD control register (OC)	OC7	0	0	OC4	OC3	OC2	OC1	OC0	00_{16}							
$D1_{16}$	Horizontal position register (HP)		HP6	HP5	HP4	HP3	HP2	HP1	HP0	00_{16}							
$D2_{16}$	Block control register 1(BC1)	BC17	BC16	BC15	BC14	BC13	BC12	BC11	BC10	?							
$D3_{16}$	Block control register 2(BC2)	BC27	BC26	BC25	BC24	BC23	BC22	BC21	BC20	?							
$D4_{16}$	Vertical position register 1(VP1)	VP17	VP16	VP15	VP14	VP13	VP12	VP11	VP10	?							
$D5_{16}$	Vertical position register 2(VP2)	VP27	VP26	VP25	VP24	VP23	VP22	VP21	VP20	?							
$D6_{16}$	Window register 1(WN1)	WN17	WN16	WN15	WN14	WN13	WN12	WN11	WN10	?							
$D7_{16}$	Window register 2(WN2)	WN27	WN26	WN25	WN24	WN23	WN22	WN21	WN20	?							
$D8_{16}$	I/O polarity control register (PC)	0	PC6	PC5	0	PC3	PC2	PC1	PC0	40_{16}							
$D9_{16}$	Raster color register (RC)	RC7	0	0	0	RC3	RC2	RC1	RC0	00_{16}							
DA_{16}										?							
DB_{16}	OSD control register 2(OC2)	0	0	0			0	OC21	OC20	0	0	0	?	0	0	0	0
DC_{16}	Interrupt input polarity control register (RE)						INT3	INT2	INT1	00_{16}							
DD_{16}		00_{16}								00_{16}							
DE_{16}		00_{16}								00_{16}							
DF_{16}		00_{16}								00_{16}							

■ SFR1 Area (addresses $E0_{16}$ to FF_{16})

<Bit allocation>

☐ : / Name :	Function bit
▒	: No function bit
0	: Fix this bit to "0" (do not write "1")
1	: Fix this bit to "1" (do not write "0")

<State immediately after reset>

0	: "0" immediately after reset
1	: "1" immediately after reset
?	: Indeterminate immediately after reset

Address	Register	Bit allocation b7							b0	State immediately after reset b7							b0
$E0_{16}$	Data slicer control register 1 (DSC1)	0	1	1	0	0	DSC12	DSC11	DSC10	00_{16}							
$E1_{16}$	Data slicer control register 2 (DSC2)		0	DSC25	DSC24	DSC23		1	DSC20	?	0	?	0	?	?	0	?
$E2_{16}$	Caption data register 1 (CD1)	CDL17	CDL16	CDL15	CDL14	CDL13	CDL12	CDL11	CDL10	00_{16}							
$E3_{16}$	Caption data register 2 (CD2)	CDH17	CDH16	CDH15	CDH14	CDH13	CDH12	CDH11	CDH10	00_{16}							
$E4_{16}$	Clock run-in detect register (CRD)	CRD7	CRD6	CRD5	CRD4	CRD3				00_{16}							
$E5_{16}$	Data clock position register (DPS)	DPS7	DPS6	DPS5	DPS4	DPS3	0	1	0	09_{16}							
$E6_{16}$	Caption position register (CPS)	CPS7	CPS6	CPS5	CPS4	CPS3	CPS2	CPS1	CPS0	0	0	?	0	0	0	0	0
$E7_{16}$	Data slicer test register 2									00_{16}							
$E8_{16}$	Data slicer test register 1									00_{16}							
$E9_{16}$	Synchronous signal counter register (HC)			HC5	HC4	HC3	HC2	HC1	HC0	00_{16}							
EA_{16}	Serial I/O register (SIO)									?							
EB_{16}	Serial I/O mode register (SM)	0	SM6	SM5	0	SM3	SM2	SM1	SM0	00_{16}							
EC_{16}	A-D control register 1 (AD1)				ADC14		ADC12	ADC11	ADC10	0	0	0	?	0	0	0	0
ED_{16}	A-D control register 2 (AD2)		ADC26	ADC25	ADC24	ADC23	ADC22	ADC21	ADC20	00_{16}							
EE_{16}	Timer 5 (T5)									07_{16}							
EF_{16}	Timer 6 (T6)									FF_{16}							
$F0_{16}$	Timer 1 (T1)									FF_{16}							
$F1_{16}$	Timer 2 (T2)									07_{16}							
$F2_{16}$	Timer 3 (T3)									FF_{16}							
$F3_{16}$	Timer 4 (T4)									07_{16}							
$F4_{16}$	Timer mode register 1 (TM1)	TM17	TM16	TM15	TM14	TM13	TM12	TM11	TM10	00_{16}							
$F5_{16}$	Timer mode register 2 (TM2)	TM27	TM26	TM25	TM24	TM23	TM22	TM21	TM20	00_{16}							
$F6_{16}$	I^2C data shift register (S0)	D7	D6	D5	D4	D3	D2	D1	D0	?							
$F7_{16}$	I^2C address register (S0D)	SAD6	SAD5	SAD4	SAD3	SAD2	SAD1	SAD0	RBW	00_{16}							
$F8_{16}$	I^2C status register (S1)	MST	TRX	BB	PIN	AL	AAS	AD0	LRB	0	0	0	1	0	0	0	?
$F9_{16}$	I^2C control register (S1D)	BSEL1	BSEL0	10BIT SAD	ALS	ESO	BC2	BC1	BC0	00_{16}							
FA_{16}	I^2C clock control register (S2)	ACK	ACK BIT	FAST MODE	CCR4	CCR3	CCR2	CCR1	CCR0	00_{16}							
FB_{16}	CPU mode register (CPUM)	CM7	CM6	CM5	1	1	CM2	0	0	$3C_{16}$							
FC_{16}	Interrupt request register 1 (IREQ1)		IN3R	VSCR	OSDR	TM4R	TM3R	TM2R	TM1R	00_{16}							
FD_{16}	Interrupt request register 2 (IREQ2)	0	TM56R	IICR	IN2R	CKR	S1R	DSR	IN1R	00_{16}							
FE_{16}	Interrupt control register 1 (ICON1)		IN3E	VSCE	OSDE	TM4E	TM3E	TM2E	TM1E	00_{16}							
FF_{16}	Interrupt control register 2 (ICON2)	TM56C	TM56E	IICE	IN2E	CKE	S1E	DSE	IN1E	00_{16}							

■SFR2 Area (addresses 200_{16} to $20F_{16}$)

<Bit allocation>

☐ :	Function bit
Name :	Function bit
■	: No function bit
0	: Fix this bit to 0 (do not write 1)
1	: Fix this bit to 1 (do not write 0)

<State immediately after reset>

0	: 0 immediately after reset
1	: 1 immediately after reset
?	: Indeterminate immediately after reset

Address	Register	Bit allocation b7							b0	State immediately after reset b7							b0
200_{16}	PWM0 register (PWM0)									?							
201_{16}	PWM1 register (PWM1)									?							
202_{16}	PWM2 register (PWM2)									?							
203_{16}	PWM3 register (PWM3)									?							
204_{16}	PWM4 register (PWM4)									?							
205_{16}										?							
206_{16}		00_{16}								?							
207_{16}		00_{16}								?							
208_{16}	PWM mode register 1 (PM1)					PM13			PM10	?	?	?	?	0	?	?	0
209_{16}	PWM mode register 2 (PM2)	0	0	0	PM24	PM23	PM22	PM21	PM20	00_{16}							
$20A_{16}$	ROM correction address 1 (high-order)									00_{16}							
$20B_{16}$	ROM correction address 1 (low-order)									00_{16}							
$20C_{16}$	ROM correction address 2 (high-order)									00_{16}							
$20D_{16}$	ROM correction address 2 (low-order)									00_{16}							
$20E_{16}$	ROM correction enable register (RCR)							RC1	RC0	00_{16}							
$20F_{16}$										?							
210_{16}	Clock frequency set register (CFS)									0	0	0	0	1	1	1	0
211_{16}	Clock control register 2(CC2)	0	0	0	0	1	CC22	0	0	00_{16}							
212_{16}	Clock control register 3(CC3)	CC37	0	CC35	0	0	0	0	0	00_{16}							

<Bit allocation>

[ ] : } Function bit
[Name] : }

[ ] : No function bit

[0] : Fix to this bit to “0” (do not write to “1”)

[1] : Fix to this bit to “1” (do not write to “0”)

<State immediately after reset>

[0] : “0” immediately after reset

[1] : “1” immediately after reset

[?] : Indeterminate immediately after reset

Register	Bit allocation (b7 … b0)	State immediately after reset (b7 … b0)
Processor status register (PS)	N V T B D I Z C	? ? ? ? ? 1 ? ?
Program counter (PC_H)		Contents of address $FFFF_{16}$
Program counter (PC_L)		Contents of address $FFFE_{16}$

Structure of Register

The figure of each register structure describes its functions, contents at reset, and attributes as follows:

<Example>

CPU Mode Register

Bit position **Bit attributes** (Note 2)

Values immediately after reset release (Note 1)

b7	b6	b5	b4	b3	b2	b1	b0
			1	1		0	0

CPU mode register (CPUM) (CM) [Address 00FB16]

B	Name	Functions	After re	R	W
0, 1	Processor mode bits (CM0, CM1)	b1 b0 0 0: Single-chip mode 0 1: } Not available 1 0: } Not available 1 1: } Not available	0	R	W
2	Stack page selection bit (See note) (CM2)	0: 0 page 1: 1 page	1	R	W
3, 4	Fix these bits to "1."		1	R	W
5	Nothing is assigned. This bit is write disable bit. When this bit is read out, the value is "1."		1	R	W
6, 7	Clock switch bits (CM6, CM7)	b7 b6 0 0: f(XIN) = 8 MHz 0 1: f(XIN) = 12 MHz 1 0: f(XIN) = 16 MHz 1 1: Do not set	0	R	W

: Bit in which nothing is assigned

Notes 1: Values immediately after reset release
0 ••••••••••••••••••"0" after reset release
1 ••••••••••••••••••"1" after reset release
Indeterminate•••Indeterminate after reset release

2: Bit attributes••••••The attributes of control register bits are classified into 3 types : read-only, write-only and read and write. In the figure, these attributes are represented as follows :

R••••••Read
R ••••••Read enabled
– ••••••Read disabled

W••••••Write
W ••••••Write enabled
– ••••••Write disabled
✻ ••••••"0" can be set by software, but "1" cannot be set.

Address 00C1$_{16}$, 00C5$_{16}$

Port Pi Direction Register

b7 b6 b5 b4 b3 b2 b1 b0

Port Pi direction register (Di) (i=0, 2) [Addresses 00C1$_{16}$, 00C5$_{16}$]

B	Name	Functions	After reset	R	W
0	Port Pi direction register	0 : Port Pi_0 input mode 1 : Port Pi_0 output mode	0	R	W
1		0 : Port Pi_1 input mode 1 : Port Pi_1 output mode	0	R	W
2		0 : Port Pi_2 input mode 1 : Port Pi_2 output mode	0	R	W
3		0 : Port Pi_3 input mode 1 : Port Pi_3 output mode	0	R	W
4		0 : Port Pi_4 input mode 1 : Port Pi_4 output mode	0	R	W
5		0 : Port Pi_5 input mode 1 : Port Pi_5 output mode	0	R	W
6		0 : Port Pi_6 input mode 1 : Port Pi_6 output mode	0	R	W
7		0 : Port Pi_7 input mode 1 : Port Pi_7 output mode	0	R	W

Address 00C2$_{16}$

Port P1 register

b7 b6 b5 b4 b3 b2 b1 b0

0

Port P1 register (P1) [Address 00C2$_{16}$]

B	Name	Functions	After reset	R	W
0	Port P1 register	Port $P1_0$ data	Indeterminate	R	W
1		Port $P1_1$ data	Indeterminate	R	W
2		Port $P1_2$ data	Indeterminate	R	W
3		Port $P1_3$ data	Indeterminate	R	W
4		Port $P1_4$ data	Indeterminate	R	W
5		Port $P1_5$ data	0	R	W
6		Port $P1_6$ data	Indeterminate	R	W
7	Fix this bit to "0"		Indeterminate	R	W

Address 00C3$_{16}$

Port P1 direction register

b7	b6	b5	b4	b3	b2	b1	b0
0							

Port P1 direction register (D1) [Address 00C3$_{16}$]

B	Name	Functions	After reset	R	W
0	Port P1 direction register	0 : Port P1$_0$ input mode (note) 1 : Port P1$_0$ output mode	1	R	W
1		0 : Port P1$_1$ input mode 1 : Port P1$_1$ output mode	0	R	W
2		0 : Port P1$_2$ input mode 1 : Port P1$_2$ output mode	0	R	W
3		0 : Port P1$_3$ input mode 1 : Port P1$_3$ output mode	0	R	W
4		0 : Port P1$_4$ input mode 1 : Port P1$_4$ output mode	0	R	W
5		0 : Port P1$_5$ input mode 1 : Port P1$_5$ output mode	1	R	W
6		0 : Port P1$_6$ input mode 1 : Port P1$_6$ output mode	0	R	W
7	Fix this bit to "0"		0	R	W

Note: When using P10 as a general-purpose port, set the Clock Control Register 3 (address 0212$_{16}$) bit 7 to 1.
When using P10 as a clock control signal, refer to 8.14.1 oscillation control.
P10 becomes clock control signal output and "H" output setting immediately after reset release , and P16 becomes "L" output setting after reset release.

Address 00C6$_{16}$

Port P3 register

b7	b6	b5	b4	b3	b2	b1	b0

Port P3 register (P3) [Address 00C6$_{16}$]

B	Name	Functions	After reset	R	W
0	Port P3 register	Port P3$_0$ data	Indeterminate	R	W
1		Port P3$_1$ data	Indeterminate	R	W
2	Switch bit of I^{2}C-BUS interface and port P3 (BSEL20) (See note)	0: Port P3$_0$, Port P3$_1$ 1: I^{2}CBUS (SDA3,SCL3)	0	R	W
3	SCL3/P3$_1$-SCL1/P1$_1$ SDA3/P3$_0$-SDA1/P1$_3$ Connection control bit (BSEL21)	0: Cutting 1: Connection	0	R	W
4 to 7	Nothing is assigned. This bit is write disable bit. When this bit is read out, the value is "0."		0	R	–

Notes
- For the ports used as the Multi-master I^{2}C-BUS interface, set their direction registers to 1.
- To use SCL3 and SDA3, set the I^{2}C Control Register (address 00F9$_{16}$) bits 6–7 to 0.

Address 00C7$_{16}$

Port P3 direction register

b7	b6	b5	b4	b3	b2	b1	b0
				0			

Port P3 direction register (D3) [Address 00C7$_{16}$]

B	Name	Functions	After reset	R	W
0	Port P3 direction register (See note 1)	0 : Port P3$_0$ input 1 : Port P3$_0$ output	0	R	W
1		0 : Port P3$_1$ input 1 : Port P3$_1$ output	0	R	W
2	Output amplitude level selection bit (OUTS) (See note 2)	0 : 2 value output 1 : 3 value output	0	R	W
3	Fix this bit to "0."		0	R	W
4,5	Nothing is assigned fix these bits When this bit are read out, the value are "0."		0	R	–
6	Timer 3 (T3SC)	Refer to explanation of a timer	0	R	W
7	Timer 2 (T2SC)	0 : P2$_4$ input 1 : P1$_6$ input	0	R	W

Notes 1: When using the port as the I^{2}C-BUS interface, set the Port P3 Direction Register to 1.
2: Use the Clock Control Register 3 (address 0212$_{16}$) bit 5 to select the binary output level of OUT.

Address 00CA$_{16}$

Port P5 register

b7	b6	b5	b4	b3	b2	b1	b0
0	0					0	0

Port P5 register (P5) [Address 00CA$_{16}$]

B	Name	Functions	After reset	R	W
0, 1	Fix these bits to "0."		Indeterminate	R	W
2	Port P5 register	Port P5$_2$ data	Indeterminate	R	W
3		Port P5$_3$ data	Indeterminate	R	W
4		Port P5$_4$ data	Indeterminate	R	W
5		Port P5$_5$ data	Indeterminate	R	W
6	Fix these bits to "0."		Indeterminate	–	W
7			Indeterminate	R	W

Address 00CB16

OSD Port Control Register

b7	b6	b5	b4	b3	b2	b1	b0
1	0					0	0

OSD port control register (PF) [Address 00CB16]

B	Name	Functions	After reset	R	W
0, 1	Fix these bits to “0.”		0	R	—
2	Port P52 output signal selection bit (PF2)	0 : B signal output 1 : Port P52 output	0	R	W
3	Port P53 output signal selection bit (PF3)	0 : G signal output 1 : Port P53 output	0	R	W
4	Port P54 output signal selection bit (PF4)	0 : R signal output 1 : Port P54 output	0	R	W
5	Port P55 output signal selection bit (PF5)	0 : OUT signal output 1 : Port P55 output	0	R	W
6	Fix this bit to “0.”		Indeterminate	—	W
7	Fix this bit to “1.”		0	R	W

Address 00CC16

Timer return setting register

b7	b6	b5	b4	b3	b2	b1	b0
	0	1	0	0	0	0	0

Timer return setting register (TMS) [Address 00CC16]

B	Name	Functions	After reset	R	W
0 to 4	Fix these bits to "0."		0	R	W
5	Fix this bit to "1."		0	R	W
6	Fix this bit to "0."		0	R	W
7	STOP mode return selection bit (TMS)	0: Timer Count "07FF16" 1: Timer Count Variable	0	R	W

Address 00CD16

Clock control register 1

b7	b6	b5	b4	b3	b2	b1	b0
0	0	0	0	0	0	0	

Clock control register 1 (CC1) [Address 00CD16]

B	Name	Functions	After reset	R	W
0	System clock generating circuit control bit (CC10)	0:Operation 1: Stop	0	R	W
1 to 7	Fix these bits to "0"		0	R	W

Address 00D016

OSD Control Register

b7	b6	b5	b4	b3	b2	b1	b0
	0	0					

OSD control register (OC) [Address 00D016]

B	Name	Functions	After reset	R	W
0	OSD control bit (OC0) (See note 1)	0 : All-blocks display off 1 : All-blocks display on	0	R	W
1	Automatic solid space control bit (OC1)	0 : OFF 1 : ON	0	R	W
2	Window control bit (OC2)	0 : OFF 1 : ON	0	R	W
3	CC mode clock selection bit (OC3)	0 : Data slicer clock 1 : Internal oscillating clock f(osc)	0	R	W
4	OSD mode clock selection bit (OC4)	0 : Data slicer clock 1 : Internal oscillating clock f(osc)	0	R	W
5, 6	Fix these bits to “0.”		0	R	W
7	Pre-divide ratio selection bit (OC7) (See note 2)	0 : Divide ratio by the block control register 1 : Pre-divide ratios = × 1 for blocks 1 and 2	0	R	W

Notes 1: Even this bit is switched during display, the display screen remains unchanged until a rising (falling) of the next VSYNC

2: This bit's priority is higher than BCi4 of Block Control Register i setting.

Address 00D1$_{16}$

Horizontal Position Register

b7 b6 b5 b4 b3 b2 b1 b0

Horizontal position register (HP) [Address 00D1$_{16}$]

B	Name	Functions	After reset	R	W
0 to 6	Horizontal display start position control bits (HP0 to HP6)	Horizontal display start position 4Tosc × n (n: setting value, Tosc: OSD oscillation cycle)	0	R	W
7	Nothing is assigned. This bit is a write disable bit. When this bit is read out, the value is "0."		0	R	—

Note: The setting value synchronizes with the V SYNC.

Address 00D2$_{16}$, 00D3$_{16}$

Block Control register i

b7 b6 b5 b4 b3 b2 b1 b0

Block control register i (BCi) (i=1, 2) [Addresses 00D2$_{16}$ and 00D3$_{16}$]

B	Name	Functions	After reset	R	W
0, 1	Display mode selection bits (BCi0, BCi1) (See note 1)	b1 b0 0 0: Display OFF 0 1: CC mode 1 0: OSD mode (Border OFF) 1 1: OSD mode (Border ON)	Indeterminate	R	W
2, 3	Dot size selection bits (BCi2, BCi3)	b4 b3 b2 Pre-divide Ratio Dot Size 0 0 0 0 × 2 1Tc × 1/2H 0 0 1 0 × 2 1Tc × 1H 0 1 0 0 × 2 2Tc × 2H 0 1 1 0 × 2 3Tc × 3H	Indeterminate	R	W
4	Pre-divide ratio selection bit (BCi4)	1 0 0 0 × 3 1Tc × 1/2H 1 0 1 0 × 3 1Tc × 1H 1 1 0 0 × 3 2Tc × 2H 1 1 1 0 × 3 3Tc × 3H	Indeterminate	R	W
5	OUToutput control bit (BCi5)	0: 2 value output control 1: 3 value output control (notes 3)	Indeterminate	R	W
6	Vertical display start position control bit (BCi6)	BC16: Block 1 BC26: Block 1	Indeterminate	R	W
7	Window top/bottom boundary control bit (BCi7)	BC17: Window top boundary BC27: Window bottom boundary	Indeterminate	R	W

Notes 1: Tc is OSD clock cycle divided in pre-divide circuit.
2: H is HSYNC.
3: Refer to the corresponding figure 8.11.18.

Address 00D4$_{16}$, 00D5$_{16}$

Vertical Position Register i

b7 b6 b5 b4 b3 b2 b1 b0

Vertical position register i (VPi) (i = 1 and 2) [Addresses 00D4$_{16}$, 00D5$_{16}$]

B	Name	Functions	After reset	R	W
0 to 7	Vertical display start position control bits (VPi0 to VPi7) (See notes)	Vertical display start position = TH × (BCi6 × 16^2 + n) (n: setting value, TH: HSYNC cycle, BCi6: bit 6 of block control register i)	Inderterminate	R	W

Notes 1: Set values except "00$_{16}$" to VPi when BCi6 is "0."
2: When OS21 of OSD control register 2 = "0", T_H = 1H_{SYNC}, and OS21 of OSD control register 2 = "1", T_H = 2H_{SYNC}.

Address 00D6$_{16}$

Window Register 1

b7 b6 b5 b4 b3 b2 b1 b0

Window register 1 (WN1) [Address 00D6$_{16}$]

B	Name	Functions	After reset	R	W
0 to 7	Window top boundary control bits (WN10 to WN17)	Window top border position = T_H × (BC17 × 16^2 + n) (n: setting value, T_H: H_{SYNC} cycle, BC17: bit 7 of block control register 1)	Inderterminate	R	W

Notes 1: Set values except "00$_{16}$" to WN1 when BC17 is "0."
2: Set values fit for the following condition: WN1 < WN2.
3: When OC21 of OSD control register 2 is "0", T_H is 1 H_{SYNC}. And when "1", T_H is 2 H_{SYNC}.

Address 00D7$_{16}$

Window Register 2

b7 b6 b5 b4 b3 b2 b1 b0

Window register 2 (WN2) [Address 00D7$_{16}$]

B	Name	Functions	After reset	R	W
0 to 7	Window bottom boundary control bits (WN20 to WN27)	Window bottom border position = T_H × (BC27 × 16^2 + n) (n: setting value, T_H: H_{SYNC} cycle, BC27: bit 7 of block control register 2)	Inderterminate	R	W

Notes 1: Set values fit for the following condition: WN1 < WN2.
2: When OC21 of OSD control register 2 is "0", T_H is 1 H_{SYNC}. And when "1", T_H is 2 H_{SYNC}.

Address 00D8$_{16}$

I/O Polarity Control Register

b7	b6	b5	b4	b3	b2	b1	b0
0			0				

I/O polarity control register (PC) [Address 00D8$_{16}$]

B	Name	Functions	After reset	R	W
0	HSYNC input polarity switch bit (PC0)	0 : Positive polarity input 1 : Negative polarity input	0	R	W
1	VSYNC input polarity switch bit (PC1)	0 : Positive polarity input 1 : Negative polarity input	0	R	W
2	R, G, B output polarity switch bit (PC2)	0 : Positive polarity output 1 : Negative polarity output	0	R	W
3	OUT1 output polarity switch bit (PC3)	0 : Positive polarity output 1 : Negative polarity output	0	R	W
5	Display dot line selection bit (PC5) (See note)	0 : □ at even field ■ at odd field 1 : ■ at even field □ at odd field	0	R	W
6	Field determination flag (PC6)	0 : Even field 1 : Odd field	1	R	
4, 7	Fix these bits to 0.		0	R	W

Note: Refer to the corresponding figure. 8.11.15

Address 00D9$_{16}$

Raster Color Register

b7	b6	b5	b4	b3	b2	b1	b0
	0	0	0				

Raster color register (RC) [Address 00D9$_{16}$]

B	Name	Functions	After reset	R	W
0	Raster color R control bit (RC0)	0 : No output 1 : Output	0	R	W
1	Raster color G control bit (RC1)	0 : No output 1 : Output	0	R	W
2	Raster color B control bit (RC2)	0 : No output 1 : Output	0	R	W
3	Raster color OUT control bit (RC3)	0 : No output 1 : Output	0	R	W
4 to 6	Fix these bits to “0.”		0	R	W
7	Port function selection bit (RC7)	0 : XCIN, XCOUT 1 : P26, P27	0	R	W

Address 00DB16

OSD Control Register 2

b7	b6	b5	b4	b3	b2	b1	b0
0	0	0			0		

OSD control register (OC2) [Address 00DB16]

B	Name	Functions	After reset	R	W
0	Vertical character dot size (OC20)	0: 1HSYNC (normal scan) 1: 2HSYNC (by scan)	0	R	W
1	Vertical start position count selection bit (OC21)	0: Counts one time by 1HSYNC.(normal scan) 1: Counts two time by 1HSYNC.(by scan)	0	R	W
2	Fix this bit to "0."		0	R	W
3	Nothing is assigned. This bit is write disable bit. When this bit is read out, the value is "0."		0	R	–
4	Nothing is assigned. This bit is write disable bit. When this bit is read out, the value is "0."		Inderterminate	–	–
5 to 7	Fix these bits to "0."		0	R	W

Address 00DC16

Interrupt Input Polarity Register

b7	b6	b5	b4	b3	b2	b1	b0

Interrupt input polarity register (RE) [Address 00DC16]

B	Name	Functions	After reset	R	W
0	INT1 polarity switch bit (INT1)	0 : Positive polarity 1 : Negative polarity	0	R	W
1	INT2 polarity switch bit (INT2)	0 : Positive polarity 1 : Negative polarity	0	R	W
2	INT3 polarity switch bit (INT3)	0 : Positive polarity 1 : Negative polarity	0	R	W
3 to 7	Nothing is assigned. These bits are write disable bits. When these bits are read out, the values are “0.”		0	R	—

Address 00E0$_{16}$

Data Slicer Control Register 1

b7	b6	b5	b4	b3	b2	b1	b0
0	1	1	0	0			

Data slicer control register 1(DSC1) [Address 00E0$_{16}$]

B	Name	Functions	After reset	R	W
0	Data slicer and timing signal generating circuit control bit (DSC10)	0: Stopped 1: Operating	0	R	W
1	Selection bit of data slice reference voltage generating field (DSC11)	0: F2 1: F1	0	R	W
2	Reference clock source selection bit (DSC12)	0: Video signal 1: HSYNC signal	0	R	W
3, 4	Fix these bits to “0.”		0	R	W
5, 6	Fix these bits to “1.”		0	R	W
7	Fix this bit to “0.”		0	R	W

Definition of fields 1 (F1) and 2 (F2)

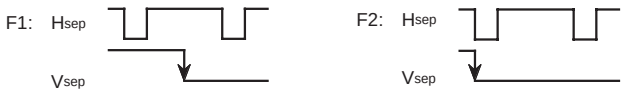

Address 00E1$_{16}$

Data Slicer Control Register 2

b7	b6	b5	b4	b3	b2	b1	b0
	0					1	

Data slicer control register 2 (DSC2) [Address 00E1$_{16}$]

B	Name	Functions	After reset	R	W
1	Caption data latch completion flag 1 (DSC20)	0: Data is not latched yet and a clock-run-in is not determined. 1: Data is latched and a clock-run-in is determined.	Indeterminate	R	—
1	Fix this bit to "1."		0	R	W
2	Test bit	Read-only	Indeterminate	R	—
0	Field determination flag(DSC23)	0: F2 1: F1	Indeterminate	R	—
4	Vertical synchronous signal (V_{sep}) generating method selection bit (DSC24)	0: Method (1) 1: Method (2)	0	R	W
5	V-pulse shape determination flag (DSC25)	0: Match 1: Mismatch	Indeterminate	R	—
6	Fix this bit to "0."		0	R	W
7	Test bit	Read-only	Indeterminate	R	—

Definition of fields 1 (F1) and 2 (F2)

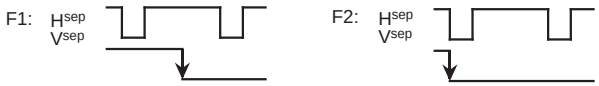

Address 00E4$_{16}$

Clock Run-in Detect Register

b7	b6	b5	b4	b3	b2	b1	b0

Clock run-in detect register (CRD) [Address 00E4$_{16}$]

B	Name	Functions	After reset	R	W
0 to 2	Test bits	Read-only	0	R	—
3 to 7	Clock run-in detection bit(CRD3 to CRD7)	Number of reference clocks to be counted in one clock run-in pulse period.	0	R	—

Address 00E5$_{16}$

Data Clock Position Register

b7	b6	b5	b4	b3	b2	b1	b0
					0	1	0

Data clock position register (DPS) [Address 00E5$_{16}$]

B	Name	Functions	After reset	R	W
0	Fix this bit to "0."		1	R	W
1	Fix this bit to "1."		0	R	W
2	Fix this bit to "0."		0	R	W
3	Data clock position set bits (DPS3 to DPS7)		1	R	W
4 to 7			0		

Address 00E6$_{16}$

Caption Position Register

b7	b6	b5	b4	b3	b2	b1	b0

Caption Position Register (CPS) [Address 00E6$_{16}$]

B	Name	Functions	After reset	R	W
0 to 4	Caption position bits(CPS0 to CPS4)		0	R	W
5	Caption data latch completion flag 2 (CPS5)	0: Data is not latched yet and a clock-run-in is not determined. 1: Data is latched and a clock-run-in is determined.	Indeterminate	R	—
6, 7	Slice line mode specification bits (in 1 field) (CPS6, CPS7)	Refer to the corresponding Table (Table 8.10.1).	0	R	W

Address 00E9$_{16}$

Sync Pulse Counter Register

b7	b6	b5	b4	b3	b2	b1	b0

Sync pulse counter register (HC) [Address 00E9$_{16}$]

B	Name	Functions	After reset	R	W
0 to 4	Count value (HC0 to HC4)		0	R	—
5	Count source (HC5)	0: H_{SYNC} signal 1: Composite sync signal	0	R	W
6, 7	Nothing is assigned. These bits are write disable bits. When these bits are read out, the values are "0."		0	R	—

Address 00EB16

Serial I/O Mode Register

b7	b6	b5	b4	b3	b2	b1	b0
0			0				

Serial I/O mode register (SM) [Address 00EB16]

B	Name	Functions	After reset	R	W
0, 1	Internal synchronous clock selection bits (SM0, SM1)	b1 b0 0 0: f(XIN)/8 or f(XCIN)/8 0 1: f(XIN)/16 or f(XCIN)/16 1 0: f(XIN)/32 or f(XCIN)/32 1 1: f(XIN)/64 or f(XCIN)/64	0	R	W
2	Synchronous clock selection bit (SM2)	0: External clock 1: Internal clock	0	R	W
3	Port function selection bit (SM3)	0: P20, P21 1: SCLK, SOUT	0	R	W
4	Fix this bit to “0.”		0	R	W
5	Transfer direction selection bit (SM5)	0: LSB first 1: MSB first	0	R	W
6	Transfer clock input pin selection bit (SM6)	0: Input signal from SIN pin 1: Input signal from SOUT pin	0	R	W
7	Fix this bit to “0.”		0	R	W

Address 00EC16

A-D Control Register 1

b7	b6	b5	b4	b3	b2	b1	b0

A-D control register 1 (AD1) [Address 00EC16]

B	Name	Functions	After reset	R	W
0 to 2	Analog input pin selection bits (ADC10 to ADC12)	b2 b1 b0 0 0 0 : AD1 0 0 1 : AD2 0 1 0 : AD3 0 1 1 : AD4 1 0 0 : AD5 1 0 1 : AD6 1 1 0 : AD7 1 1 1 : AD8	0	R	W
3	This bit is a write disable bit. When this bit is read out, the value is “0.”		0	R	—
4	Storage bit of comparison result (ADC14)	0: Input voltage < reference voltage 1: Input voltage > reference voltage	Indeterminate	R	—
5 to 7	Nothing is assigned. These bits are write disable bits. When these bits are read out, the values are “0.”		0	R	—

Address 00ED16

A-D Control Register 2

b7	b6	b5	b4	b3	b2	b1	b0

A-D control register 2 (AD2) [Address 00ED16]

B	Name	Functions	After reset	R	W
0 to 6	D-A converter set bits (ADC20 to ADC25)	b6 b5 b4 b3 b2 b1 b0 0 0 0 0 0 0 0 : 1/256Vcc 0 0 0 0 0 0 1 : 3/256Vcc 0 0 0 0 0 1 0 : 5/256Vcc ⋮ 1 1 1 1 1 0 1 : 251/256Vcc 1 1 1 1 1 1 0 : 253/256Vcc 1 1 1 1 1 1 1 : 255/256Vcc	0	R	W
7	Nothing is assigned. This bit is a write disable bit. When these bits are reed out, the values are " 0."		0	R	—

Address 00F416

Timer Mode Register 1

b7	b6	b5	b4	b3	b2	b1	b0

Timer mode register 1 (TM1) [Address 00F4 16]

B	Name	Functions	After reset	R	W
0	Timer 1 count source selection bit 1 (TM10)	0: f(XIN)/16 or f(XCIN)/16 (See note) 1: Count source selected by bit 5 of TM1	0	R	W
1	Timer 2 count source selection bit 1 (TM11)	0: Count source selected by bit 4 of TM1 1: External clock from TIM2 pin	0	R	W
2	Timer 1 count stop bit (TM12)	0: Count start 1: Count stop	0	R	W
3	Timer 2 count stop bit (TM13)	0: Count start 1: Count stop	0	R	W
4	Timer 2 count source selection bit 2 (TM14)	0: f(XIN)/16 or f(XCIN)/16 (See note) 1: Timer 1 overflow	0	R	W
5	Timer 1 count source selection bit 2 (TM15)	0: f(XIN)/4096 or f(XCIN)/4096 (See note) 1: External clock from TIM2 pin	0	R	W
6	Timer 5 count source selection bit 2 (TM16)	0: Timer 2 overflow 1: Timer 4 overflow	0	R	W
7	Timer 6 internal count source selection bit (TM17)	0: f(XIN)/16 or f(XCIN)/16 (See note) 1: Timer 5 overflow	0	R	W

Note: Either f(XIN) or f(XCIN) is selected by bit 7 of the CPU mode register.

Address 00F5$_{16}$

Timer Mode Register 2

b7 b6 b5 b4 b3 b2 b1 b0

Timer mode register 2 (TM2) [Address 00F5$_{16}$]

B	Name	Functions	After reset	R	W
0	Timer 3 count source selection bit (TM20)	(b6 at address 00C7$_{16}$) b0 0 0 : f(XIN)/16 or f(XCIN)/16 (See note) 1 0 : f(XCIN) 0 1 : 1 1 : } External clock from TIM3 pin	0	R	W
1, 4	Timer 4 count source selection bits (TM21, TM24)	b4 b1 0 0 : Timer 3 overflow signal 0 1 : f(XIN)/16 or f(XCIN)/16 (See note) 1 0 : f(XIN)/2 or f(XCIN)/2 (See note) 1 1 : f(XCIN)	0	R	W
2	Timer 3 count stop bit (TM22)	0: Count start 1: Count stop	0	R	W
3	Timer 4 count stop bit (TM23)	0: Count start 1: Count stop	0	R	W
5	Timer 5 count stop bit (TM25)	0: Count start 1: Count stop	0	R	W
6	Timer 6 count stop bit (TM26)	0: Count start 1: Count stop	0	R	W
7	Timer 5 count source selection bit 1 (TM27)	0: f(XIN)/16 or f(XCIN)/16 (See note) 1: Count source selected by bit 6 of TM1	0	R	W

Note: Either f(XIN) or f(XCIN) is selected by bit 7 of the CPU mode register.

Address 00F6$_{16}$

I^{2}C Data Shift Register

b7 b6 b5 b4 b3 b2 b1 b0

I^{2}C data shift register 1(S0) [Address 00F6$_{16}$]

B	Name	Functions	After reset	R	W
0 to 7	D0 to D7	This is an 8-bit shift register to store receive data and write transmit data.	Indeterminate	R	W

Note : To write data into the I^{2}C data shift register after setting the MST bit to "0" (slave mode), keep an interval of 8 machine cycles or more.

Address 00F7$_{16}$

I^{2}C Address Register

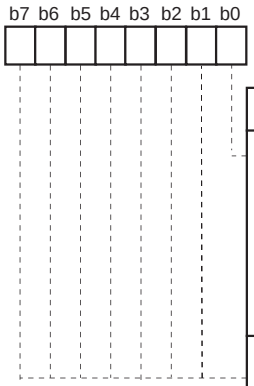

I^{2}C address register (S0D) [Address 00F7$_{16}$]

B	Name	Functions	After reset	R	W
0	$\overline{\text{Read}}$/write bit (RBW)	<Only in 10-bit addressing (in slave) mode> The last significant bit of address data is compared. 0: Wait the first byte of slave address after START condition (read state) 1: Wait the first byte of slave address after RESTART condition (write state)	0	R	—
1 to 7	Slave address (SAD0 to SAD6)	<In both modes> The address data is compared.	0	R	W

Address 00F8$_{16}$

I^{2}C Status Register

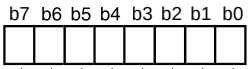

I^{2}C status register (S1) [Address 00F8$_{16}$]

B	Name	Functions	After reset	R	W
0	Last receive bit (LRB) (See note)	0 : Last bit = “0 ” 1 : Last bit = “1 ” (See note)	Indeterminate	R	—
1	General call detecting flag (AD0) (See note)	0 : No general call detected 1 : General call detected (See note)	0	R	—
2	Slave address comparison flag (AAS) (See note)	0 : Address mismatch 1 : Address match (See note)	0	R	—
3	Arbitration lost detecting flag (AL) (See note)	0 : Not detected 1 : Detected (See note)	0	R	—
4	I^{2}C-BUS interface interrupt request bit (PIN)	0 : Interrupt request issued 1 : No interrupt request issued	1	R	W
5	Bus busy flag (BB)	0 : Bus free 1 : Bus busy	0	R	W
6, 7	Communication mode specification bits (TRX, MST)	b7 b6 0 0 : Slave recieve mode 0 1 : Slave transmit mode 1 0 : Master recieve mode 1 1 : Master transmit mode	0	R	W

Note : These bits and flags can be read out, but cannnot be written.

Address 00F9$_{16}$

I^{2}C Control Register

b7	b6	b5	b4	b3	b2	b1	b0

I^{2}C control register (S1D) [Address 00F9$_{16}$]

B	Name	Functions	After reset	R	W
0 to 2	Bit counter (Number of transmit/recieve bits) (BC0 to BC2)	b2 b1 b0 0 0 0 : 8 0 0 1 : 7 0 1 0 : 6 0 1 1 : 5 1 0 0 : 4 1 0 1 : 3 1 1 0 : 2 1 1 1 : 1	0	R	W
3	I^{2}C-BUS interface use enable bit (ESO)	0 : Disabled 1 : Enabled	0	R	W
4	Data format selection bit(ALS)	0 : Addressing mode 1 : Free data format	0	R	W
5	Addressing format selection bit (10BIT SAD)	0 : 7-bit addressing format 1 : 10-bit addressing format	0	R	W
6, 7	Connection control bits between I^{2}C-BUS interface and ports (BSEL0, BSEL1)	b7 b6 Connection port (See note) 0 0: None 0 1: SCL1, SDA1 1 0: SCL2, SDA2 1 1: SCL1, SDA1 SCL2, SDA2	0	R	W

Note: • Set the corresponding direction register to "1" to use the port as multi-master I^{2}C-BUS interface.
• To use SCL1, SDA1, SCL2 and SDA2, set the port P3 Register (address 00C6$_{16}$) bit 2 to 0.

Address 00FA16

I2C Clock Control Register

b7	b6	b5	b4	b3	b2	b1	b0

I2C clock control register (S2) [Address 00FA16]

B	Name	Functions			After reset	R	W
0 to 4	SCL frequency control bits (CCR0 to CCR4)	Setup value of CCR4–CCR0	Standard clock mode	High speed clock mode	0	R	W
		00 to 02	Setup disabled	Setup disabled			
		03	Setup disabled	333			
		04	Setup disabled	250			
		05	100	400 (See note)			
		06	83.3	166			
		⋮	500/CCR value	1000/CCR value			
		1D	17.2	34.5			
		1E	16.6	33.3			
		1F	16.1	32.3			
		(ϕ = at 4 MHz, unit : kHz)					
5	SCL mode specification bit (FAST MODE)	0: Standard clock mode 1: High-speed clock mode			0	R	W
6	ACK bit (ACK BIT)	0: ACK is returned. 1: ACK is not returned.			0	R	W
7	ACK clock bit (ACK)	0: No ACK clock 1: ACK clock			0	R	W

Notes 1. At 400kHz in the high-speed clock mode, the duty is as below .
"0" period : "1" period = 3 : 2
In the other cases, the duty is as below.
"0" period : "1" period = 1 : 1

2. At FSCIN = 3.58 MHz, ϕ = 8.95/2 MHz
At FSCIN = 4.43 MHz, ϕ = 8.86/2 MHz
Values shown in table is as below :
At FSCIN = 3.58 MHz, each value × 8.95/8
At FSCIN = 4.43 MHz, each value × 8.86/8

Address 00FB16

CPU Mode Register

b7	b6	b5	b4	b3	b2	b1	b0
			1	1		0	0

CPU mode register (CM) [Address 00FB16]

B	Name	Functions	After reset	R	W
0, 1	Processor mode bits (CM0, CM1)	b1 b0 0 0: Single-chip mode 0 1: } Not available 1 0: } Not available 1 1: } Not available	0	R	W
2	Stack page selection bit (CM2) (See note1)	0: 0 page 1: 1 page	1	R	W
3, 4	Fix these bits to "1."		1	R	W
5	XCOUT drivability selection bit (CM5)	0: LOW drive 1: HIGH drive	1	R	W
6	Main Clock (XIN) stop bit (CM6)	0: Oscillating 1: Stopped	0	R	W
7	Internal system clock selection bit (CM7) (See note2)	0: XIN selected (high-speed mode) 1: XCIN–XCOUT selected or FSCIN input selected (low-speed mode)	0	R	W

Note 1: This bit is set to "1" after the reset release.
2: XCIN-XCOUT and FSCIN are switched over using Clock Control Register 2 (address 0211$_{16}$) bit 2.

Address 00FC16

Interrupt Request Register 1

b7	b6	b5	b4	b3	b2	b1	b0

Interrupt request register 1 (IREQ1) [Address 00FC16]

B	Name	Functions	Afrer reset	R	W
0	Timer 1 interrupt request bit (TM1R)	0 : No interrupt request issued 1 : Interrupt request issued	0	R	*
1	Timer 2 interrupt request bit (TM2R)	0 : No interrupt request issued 1 : Interrupt request issued	0	R	*
2	Timer 3 interrupt request bit (TM3R)	0 : No interrupt request issued 1 : Interrupt request issued	0	R	*
3	Timer 4 interrupt request bit (TM4R)	0 : No interrupt request issued 1 : Interrupt request issued	0	R	*
4	OSD interrupt request bit (OSDR)	0 : No interrupt request issued 1 : Interrupt request issued	0	R	*
5	VSYNC interrupt request bit (VSCR)	0 : No interrupt request issued 1 : Interrupt request issued	0	R	*
6	INT3 external interrupt request bit (IN3R)	0 : No interrupt request issued 1 : Interrupt request issued	0	R	*
7	Nothing is assigned. This bit is a write disable bit. When this bit is read out, the value is "0."		0	R	—

*: "0" can be set by software, but "1" cannot be set.

Address 00FD16

Interrupt Request Register 2

b7	b6	b5	b4	b3	b2	b1	b0
0							

Interrupt request register 2 (IREQ2) [Address 00FD16]

B	Name	Functions	After reset	R	W
0	INT1 external interrupt request bit (IN1R)	0 : No interrupt request issued 1 : Interrupt request issued	0	R	*
1	Data slicer interrupt request bit (DSR)	0 : No interrupt request issued 1 : Interrupt request issued	0	R	*
2	Serial I/O interrupt request bit (SIR)	0 : No interrupt request issued 1 : Interrupt request issued	0	R	*
3	f(XIN)/4096 interrupt request bit (CKR)	0 : No interrupt request issued 1 : Interrupt request issued	0	R	*
4	INT2 external interrupt request bit (IN2R)	0 : No interrupt request issued 1 : Interrupt request issued	0	R	*
5	Multi-master I^2C-BUS interrupt request bit (IICR)	0 : No interrupt request issued 1 : Interrupt request issued	0	R	*
6	Timer 5 • 6 interrupt request bit (TM56R)	0 : No interrupt request issued 1 : Interrupt request issued	0	R	*
7	Fix this bit to “0.”		0	R	W

*: “0” can be set by software, but “1” cannot be set.

Address 00FE16

Interrupt Control Register 1

b7	b6	b5	b4	b3	b2	b1	b0

Interrupt control register 1 (ICON1) [Address 00FE16]

B	Name	Functions	After reset	R	W
0	Timer 1 interrupt enable bit (TM1E)	0 : Interrupt disabled 1 : Interrupt enabled	0	R	W
1	Timer 2 interrupt enable bit (TM2E)	0 : Interrupt disabled 1 : Interrupt enabled	0	R	W
2	Timer 3 interrupt enable bit (TM3E)	0 : Interrupt disabled 1 : Interrupt enabled	0	R	W
3	Timer 4 interrupt enable bit (TM4E)	0 : Interrupt disabled 1 : Interrupt enabled	0	R	W
4	OSD interrupt enable bit (OSDE)	0 : Interrupt disabled 1 : Interrupt enabled	0	R	W
5	VSYNC interrupt enable bit (VSCE)	0 : Interrupt disabled 1 : Interrupt enabled	0	R	W
6	INT3 external interrupt enable bit (IN3E)	0 : Interrupt disabled 1 : Interrupt enabled	0	R	W
7	Nothing is assigned. This bit is a write disable bit. When this bit is read out, the value is “0.”		0	R	—

Address 00FF16

Interrupt Control Register 2

b7 b6 b5 b4 b3 b2 b1 b0

Interrupt control register 2 (ICON2) [Address 00FF16]

B	Name	Functions	After reset	R	W
0	INT1 external interrupt enable bit (IN1E)	0 : Interrupt disabled 1 : Interrupt enabled	0	R	W
1	Data slicer interrupt enable bit (DSE)	0 : Interrupt disabled 1 : Interrupt enabled	0	R	W
2	Serial I/O interrupt enable bit (SIE)	0 : Interrupt disabled 1 : Interrupt enabled	0	R	W
3	f(XIN)/4096 interrupt enable bit (CKE)	0 : Interrupt disabled 1 : Interrupt enabled	0	R	W
4	INT2 external interrupt enable bit (IN2E)	0 : Interrupt disabled 1 : Interrupt enabled	0	R	W
5	Multi-master I2C-BUS interface interrupt enable bit (IICE)	0 : Interrupt disabled 1 : Interrupt enabled	0	R	W
6	Timer 5 • 6 interrupt enable bit (TM56E)	0 : Interrupt disabled 1 : Interrupt enabled	0	R	W
7	Timer 5 • 6 interrupt switch bit (TM56C)	0 : Timer 5 1 : Timer 6	0	R	W

Address 020816

PWM Mode Register 1

b7 b6 b5 b4 b3 b2 b1 b0

PWM mode register 1 (PM1) [Address 0208 16]

B	Name	Functions	After reset	R	W
0	PWM counts source selection bit (PM10)	0 : Count source supply 1 : Count source stop	0	R	W
1, 2	Nothing is assigned. These bits are write disable bits. When these bits are read out, the values are “0.”		Indeterminate	R	—
3	PWM output polarity selection bit (PM13)	0 : Positive polarity 1 : Negative polarity	0	R	W
4 to 7	Nothing is assigned. These bits are write disable bits. When these bits are read out, the values are “0.”		Indeterminate	R	—

Address 0209$_{16}$

PWM Mode Register 2

b7	b6	b5	b4	b3	b2	b1	b0
0	0	0					

PWM mode register 2 (PM2) [Address 0209$_{16}$]

B	Name	Functions	After reset	R	W
0	$P0_0$/PWM0 output selection bit (PM20)	0 : $P0_0$ output 1 : PWM0 output	0	R	W
1	$P0_1$/PWM1 output selection bit (PM21)	0 : $P0_1$ output 1 : PWM1 output	0	R	W
2	$P0_2$/PWM2 output selection bit (PM22)	0 : $P0_2$ output 1 : PWM2 output	0	R	W
3	$P0_3$/PWM3 output selection bit (PM23)	0 : $P0_3$ output 1 : PWM3 output	0	R	W
4	$P0_4$/PWM4 output selection bit (PM24)	0 : $P0_4$ output 1 : PWM4 output	0	R	W
5 to 7	Fix these bits to “0.”		0	R	W

Address 020E$_{16}$

ROM Correction Enable Register

b7	b6	b5	b4	b3	b2	b1	b0

ROM correction enable register (RCR) [Address 020E $_{16}$]

B	Name	Functions	After reset	R	W
0	Vector 1 enable bit (RC0)	0: Disabled 1: Enabled	0	R	W
1	Vector 2 enable bit (RC1)	0: Disabled 1: Enabled	0	R	W
2 to 7	Nothing is assigned. These bits are write disable bits. When these bits are read out, the values are “0.”		0	R	—

Address 0210$_{16}$

Clock frequency set register

b7	b6	b5	b4	b3	b2	b1	b0

Clock frequency set register(CFS) [Address 0210$_{16}$]

B	Name	Functions	After reset	R	W
0 to 7	Clock frequency bit (CFS 0 to 7)		0E	R	W
	FSCIN=3.58MHz	Set to 0E$_{16}$			
	FSCIN=4.43MHz	Set to 0B$_{16}$			

Reference clock input	Setting value	Main clock frequency f(XIN) [MHz]	OSD clock frequency f(OSC) [MHz]
FSCIN=3.58MHz	0E	8.95	26.85
FSCIN=4.43MHz	0B	8.86	26.58

Note: Do not set other than the values shown above to CFS.

Address 0211$_{16}$

Clock control register 2

b7	b6	b5	b4	b3	b2	b1	b0
0	0	0	0	1		0	0

Clock control register 2 (CC2) [Address 0211$_{16}$]

B	Name	Functions	After reset	R	W
0,1	Fix these bits to "0"		0	R	W
2	Clock sauce switch bit (Note) (CC22)	0: FSCIN input signal 1: XCIN-XCOUT	0	R	W
3	Fix this bit to "1"		0	R	W
4 to 7	Fix these bits to "0"		0	R	W

Note: This bit is valid when the CPU Mode Register (address 00FB$_{16}$) bit 7 (CM7) is set to 1.

Address 0212$_{16}$

Clock control register 3

b7	b6	b5	b4	b3	b2	b1	b0
	0		0	0	0	0	0

Clock control register 3 (CC3) [Address 0212$_{16}$]

B	Name	Functions	After reset	R	W
0 to 4	Fix these bits to "0"		0	R	W
5	R,G,B,OUT Output amplitude level selection bit (CC35)	0: 0V–V_{CC} 1: 0V–About 0.6V_{CC}	0	R	W
6	Fix this bit to "0"		0	R	W
7	$P1_0$ function-selection bit (CC37)	(Note) 0: Clock control signal 1: $P1_0$ I/O	0	R	W

Note: When used as the clock control signal, set the Port 1 Direction Register (address 00C3$_{16}$) bit 0 to 1.

19. PACKAGE OUTLINE

42P2R-A/E

Plastic 42pin 450mil SSOP

EIAJ Package Code	JEDEC Code	Weight(g)	Lead Material
SSOP42-P-450-0.80	–	0.63	Alloy 42

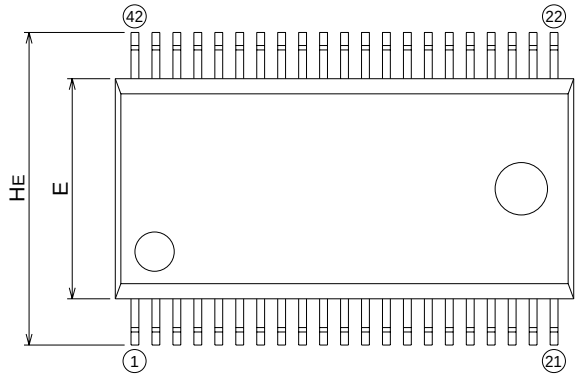

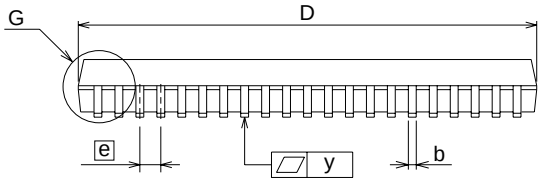

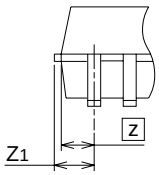

Detail G

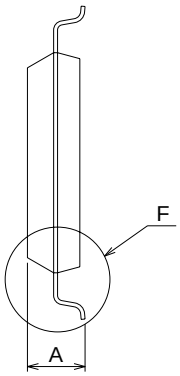

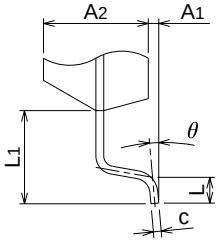

Detail F

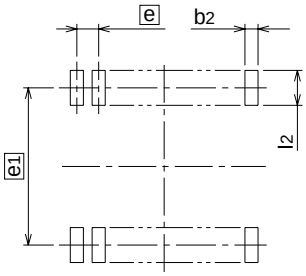

Recommended Mount Pad

Symbol	Dimension in Millimeters		
	Min	Nom	Max
A	–	–	2.4
A_1	0.05	–	–
A_2	–	2.0	–
b	0.25	0.3	0.4
c	0.13	0.15	0.2
D	17.3	17.5	17.7
E	8.2	8.4	8.6
e	–	0.8	–
H_E	11.63	11.93	12.23
L	0.3	0.5	0.7
L_1	–	1.765	–
z	–	0.75	–
Z_1	–	–	0.9
y	–	–	0.15
θ	0°	–	10°
b_2	–	0.5	–
e_1	–	11.43	–
l_2	1.27	–	–

REVISION HISTORY	M37150M6/M8/MA/MC/MF-XXXFP, M37150EFFP

Rev.	Date	Description	
		Page	Summary
1.00	Nov 01, 2002	–	First edition issued

Renesas Technology Corp. Sales Strategic Planning Div. Nippon Bldg., 2-6-2, Ohte-machi, Chiyoda-ku, Tokyo 100-0004, Japan

Keep safety first in your circuit designs!
1. Renesas Technology Corp. puts the maximum effort into making semiconductor products better and more reliable, but there is always the possibility that trouble may occur with them. Trouble with semiconductors may lead to personal injury, fire or property damage.
   Remember to give due consideration to safety when making your circuit designs, with appropriate measures such as (i) placement of substitutive, auxiliary circuits, (ii) use of nonflammable material or (iii) prevention against any malfunction or mishap.

Notes regarding these materials
1. These materials are intended as a reference to assist our customers in the selection of the Renesas Technology Corp. product best suited to the customer's application; they do not convey any license under any intellectual property rights, or any other rights, belonging to Renesas Technology Corp. or a third party.
2. Renesas Technology Corp. assumes no responsibility for any damage, or infringement of any third-party's rights, originating in the use of any product data, diagrams, charts, programs, algorithms, or circuit application examples contained in these materials.
3. All information contained in these materials, including product data, diagrams, charts, programs and algorithms represents information on products at the time of publication of these materials, and are subject to change by Renesas Technology Corp. without notice due to product improvements or other reasons. It is therefore recommended that customers contact Renesas Technology Corp. or an authorized Renesas Technology Corp. product distributor for the latest product information before purchasing a product listed herein.
   The information described here may contain technical inaccuracies or typographical errors.
   Renesas Technology Corp. assumes no responsibility for any damage, liability, or other loss rising from these inaccuracies or errors.
   Please also pay attention to information published by Renesas Technology Corp. by various means, including the Renesas Technology Corp. Semiconductor home page (http://www.renesas.com).
4. When using any or all of the information contained in these materials, including product data, diagrams, charts, programs, and algorithms, please be sure to evaluate all information as a total system before making a final decision on the applicability of the information and products. Renesas Technology Corp. assumes no responsibility for any damage, liability or other loss resulting from the information contained herein.
5. Renesas Technology Corp. semiconductors are not designed or manufactured for use in a device or system that is used under circumstances in which human life is potentially at stake. Please contact Renesas Technology Corp. or an authorized Renesas Technology Corp. product distributor when considering the use of a product contained herein for any specific purposes, such as apparatus or systems for transportation, vehicular, medical, aerospace, nuclear, or undersea repeater use.
6. The prior written approval of Renesas Technology Corp. is necessary to reprint or reproduce in whole or in part these materials.
7. If these products or technologies are subject to the Japanese export control restrictions, they must be exported under a license from the Japanese government and cannot be imported into a country other than the approved destination.
   Any diversion or reexport contrary to the export control laws and regulations of Japan and/or the country of destination is prohibited.
8. Please contact Renesas Technology Corp. for further details on these materials or the products contained therein.

RENESAS SALES OFFICES

http://www.renesas.com

Refer to "**http://www.renesas.com/en/network**" for the latest and detailed information.

Renesas Technology America, Inc.
450 Holger Way, San Jose, CA 95134-1368, U.S.A
Tel: <1> (408) 382-7500, Fax: <1> (408) 382-7501

Renesas Technology Europe Limited
Dukes Meadow, Millboard Road, Bourne End, Buckinghamshire, SL8 5FH, U.K.
Tel: <44> (1628) 585-100, Fax: <44> (1628) 585-900

Renesas Technology Hong Kong Ltd.
7th Floor, North Tower, World Finance Centre, Harbour City, 1 Canton Road, Tsimshatsui, Kowloon, Hong Kong
Tel: <852> 2265-6688, Fax: <852> 2730-6071

Renesas Technology Taiwan Co., Ltd.
10th Floor, No.99, Fushing North Road, Taipei, Taiwan
Tel: <886> (2) 2715-2888, Fax: <886> (2) 2713-2999

Renesas Technology (Shanghai) Co., Ltd.
Unit2607 Ruijing Building, No.205 Maoming Road (S), Shanghai 200020, China
Tel: <86> (21) 6472-1001, Fax: <86> (21) 6415-2952

Renesas Technology Singapore Pte. Ltd.
1 Harbour Front Avenue, #06-10, Keppel Bay Tower, Singapore 098632
Tel: <65> 6213-0200, Fax: <65> 6278-8001

© 2004. Renesas Technology Corp., All rights reserved. Printed in Japan.

Colophon .2.0