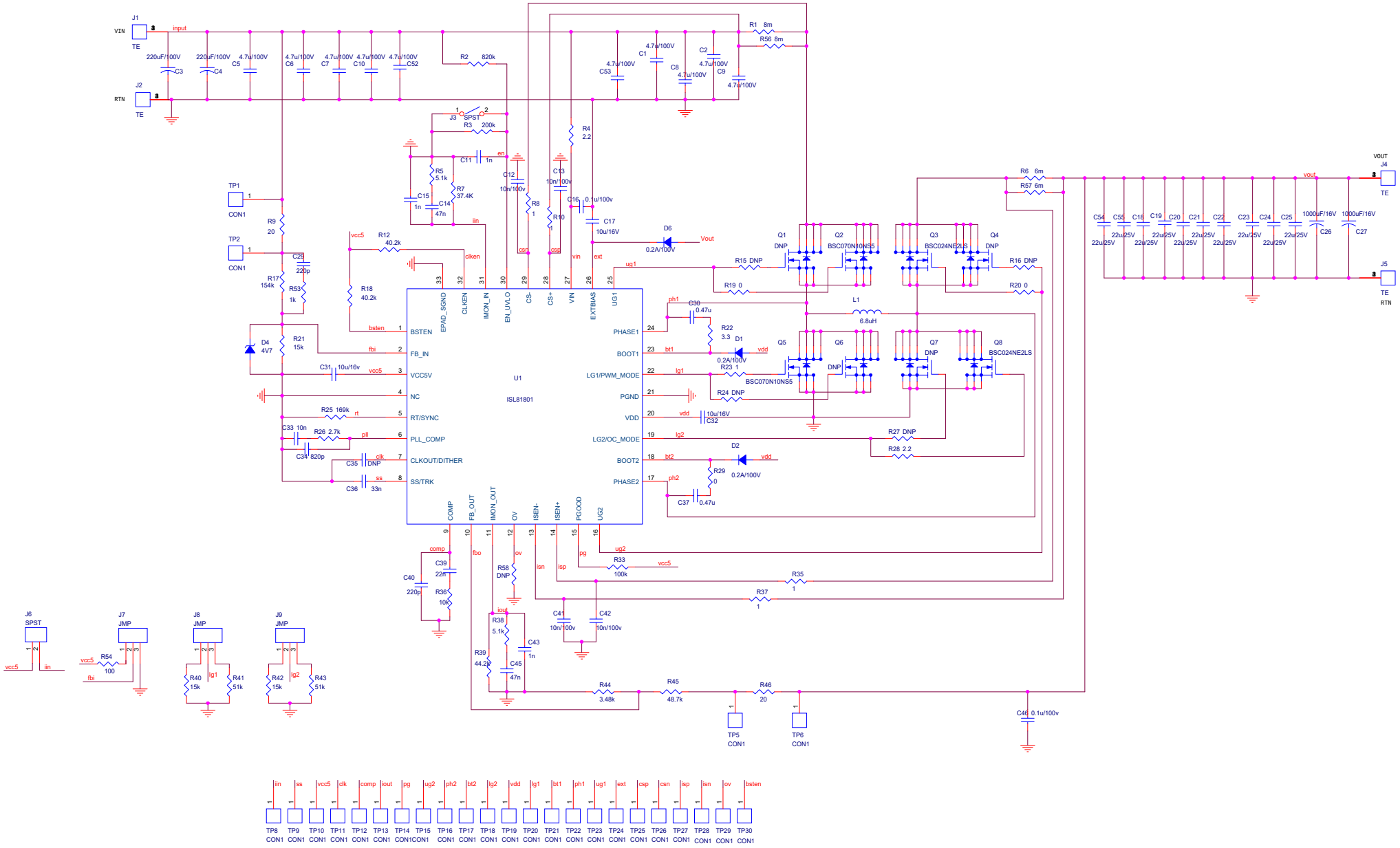

Title	ISL81801EVAL1Z		
Size C	Document Number <Doc>		Rev <D>
Date: Wednesday, March 25, 2020		Sheet 1 of 1	