Package Outline Drawing

W8x9.72A

72 Ball Wafer Level Chip Scale Package (WLCSP 0.4mm Pitch)

Rev 0, 2/15

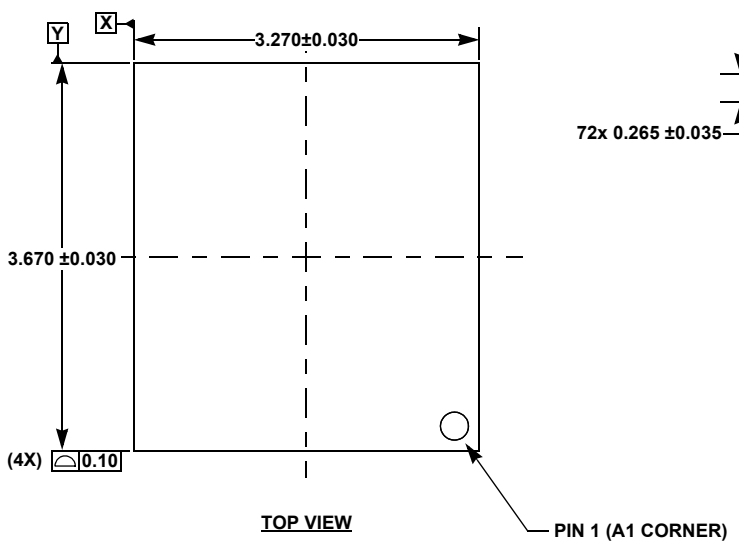

TOP VIEW

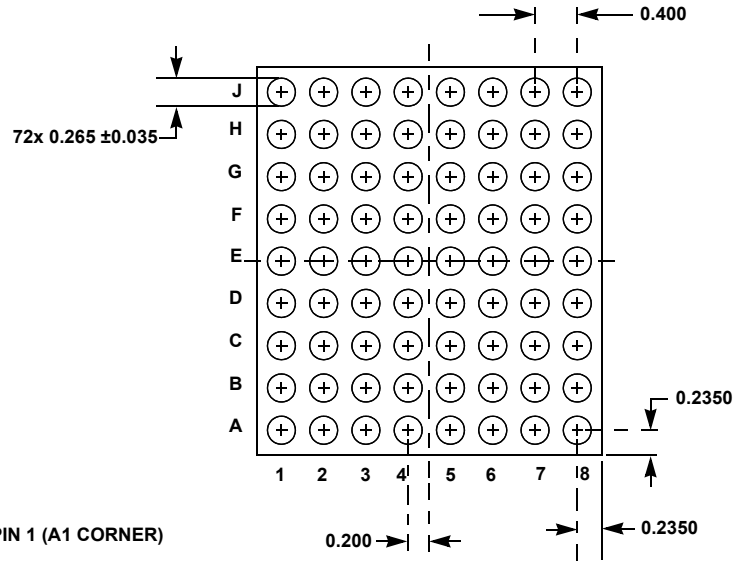

BOTTOM VIEW

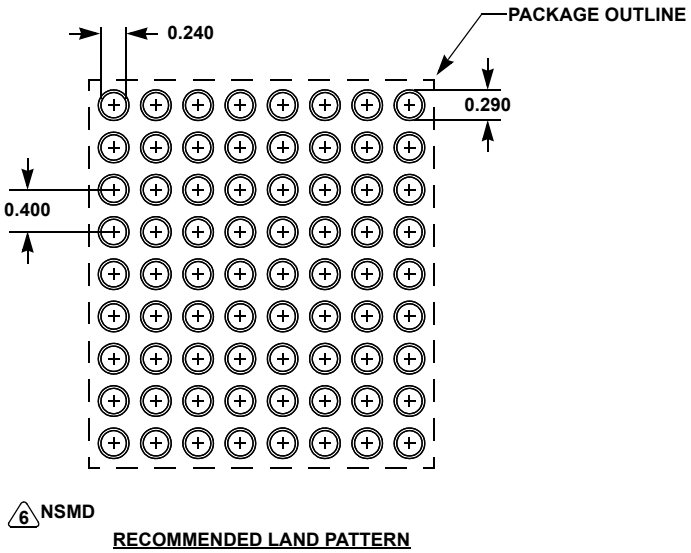

RECOMMENDED LAND PATTERN

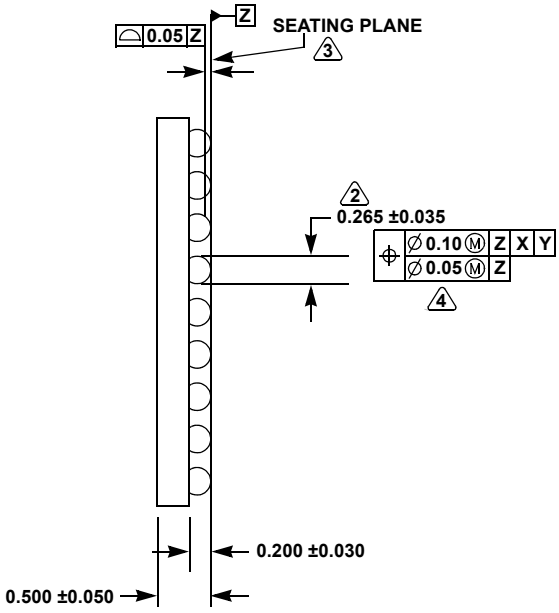

SIDE VIEW

NOTES:

1. Dimensions and tolerance and tolerance per ASMEY 14.5 - 1994.
2. Dimension is measured at the maximum bump diameter parallel to primary datum Z.
3. Primary datum Z and seating plane are defined by the spherical crowns of the bump.
4. Bump position designation per JESD 95-1, SPP-010.
5. All dimensions are in millimeters.
6. NSMD refers to non-solder mask defined pad design per Intersil Techbrief http://www.intersil.com/data/tb/tb451.pdf