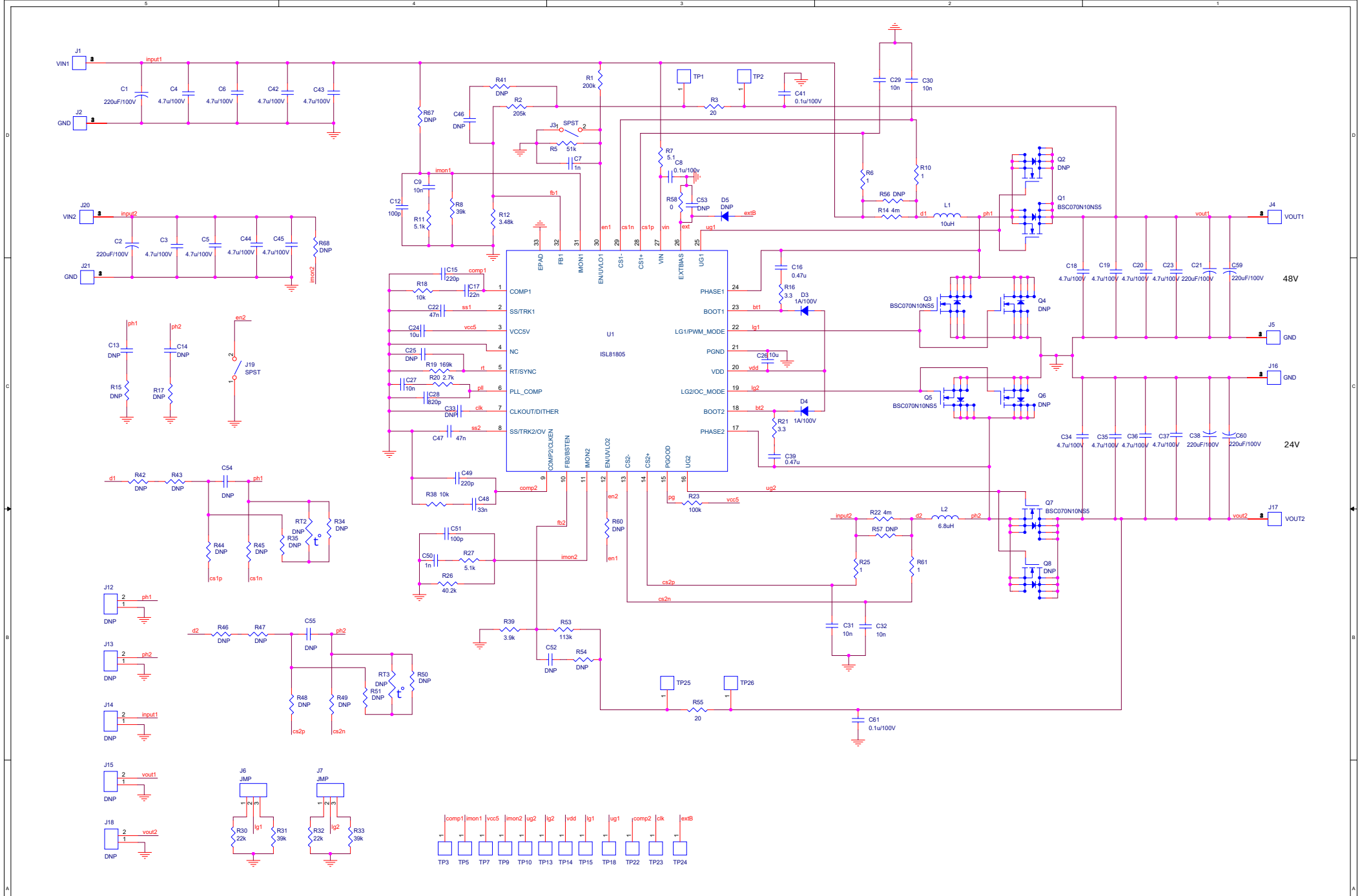

Title	Vin1:9V-36V, Vout1: 48V/3A, Vin2:9V-20V, Vout2: 24V/5A, Dual Output Boost		
Size C	Document Number ISL81805EVAL2Z		Rev B
Date: 02/01/2021		Sheet 1 of 1	