EMBOSSED TAPE

Taping Code	RENESAS Code	Previous Code
TE1612-38P2D	PTSP0038KB-A	38P2D-A
	PTSP0038KB-B	38P2D-B

Unit:mm

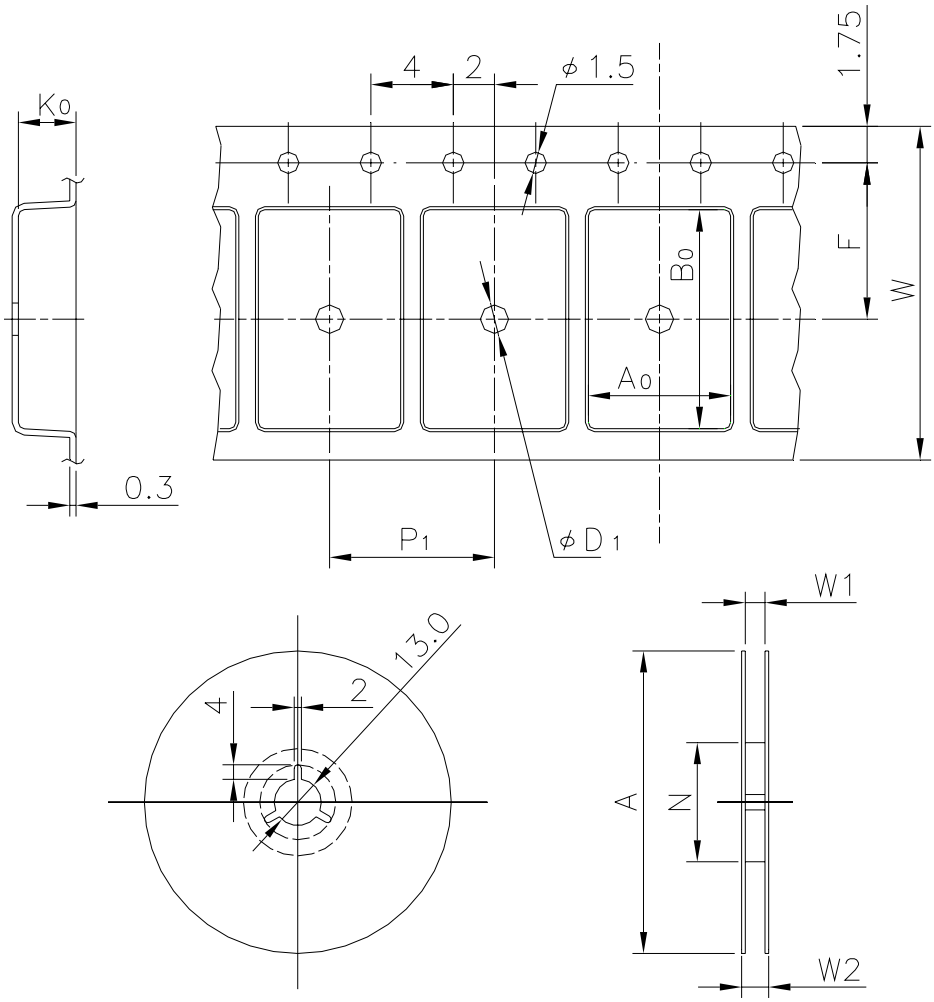

Standard Orientation of Package

The pin 1 is located in the hatching portion.

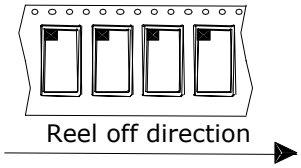

The pin 1 may also be located in the following portion for reverse bent packages and some QFPs.

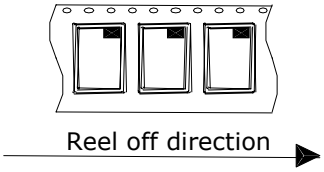

Tape Dimensions (mm)	W	16
	P_1	12
	A_0	7
	B_0	10
	K_0	1
	F	7.5
	D_1	1.5
Reel Dimensions (mm)	A	330
	N	100
	W1	17.4
	W2	21.4
Maximum storage No. IC/Reel		3000
Material		Carbon PS
Surface resistance		Less than $1x10^{11}\Omega/\square$
Packing form		Dry pack

© 2012 Renesas Electronics Corporation. All rights reserved.