Description

The 5PB11xx is a high-performance LVCMOS clock buffer family of devices. It has an additive phase jitter of 50fs RMS.

There are five different fan-out variations available: 1:2 to 1:10.

The 5PB11xx supports a synchronous glitch-free output enable (OE) function to eliminate any potential intermediate incorrect output clock cycles when enabling or disabling outputs. It can operate from a 1.8V to 3.3V supply.

Typical Applications

- Industrial applications
- Automotive:
  - Radar, Lidar, and other applications

Features

- High-performance 1:2, 1:4, 1:6, 1:8, 1:10 LVCMOS clock buffer
- Very low pin-to-pin skew: < 50ps
- Very low additive jitter: < 50fs
- Supply voltage: 1.8V to 3.3V
- 3.3V tolerant input clock
- f_{MAX} = 200MHz
- Integrated serial termination for 50Ω channel
- Packaged in 8-, 14-, 16-, 20-pin TSSOP and as small as 2.0 × 2.0 mm DFN and 3.0 × 3.0 mm VFQFPN packages
- Industrial (-40°C to +85°C) and extended (-40°C to +105°C) temperature ranges
- 5PB1104 available in AEC-Q100 qualified, Automotive Grade 1 (-40°C to +125°C)
- 5PB1110 available in AEC-Q100 qualified, Automotive Grade 2 (-40°C to +105°C)

Block Diagram

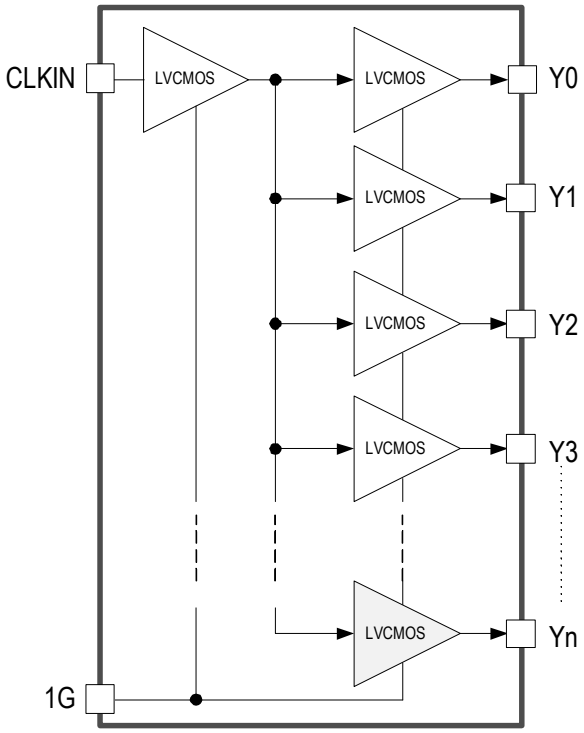

Contents

Description . . . 1
Typical Applications . . . 1
Features . . . 1
Block Diagram . . . 1
Pin Assignments – TSSOP Packages . . . 3
Pin Descriptions – TSSOP Packages . . . 3
Pin Assignments – DFN/VFQFPN Packages . . . 4
Pin Descriptions – DFN/VFQFPN Packages . . . 4
Output Logic Table . . . 5
Absolute Maximum Ratings . . . 5
Recommended Operating Conditions . . . 5
Thermal Characteristics . . . 6
DC Electrical Characteristics . . . 7
AC Electrical Characteristics . . . 13
Phase Noise Plots . . . 19
Test Load and Circuit . . . 20
Package Outline Drawings . . . 20
Marking Diagrams (Industrial) . . . 20
Marking Diagrams (Extended) . . . 21
Marking Diagrams (Automotive) . . . 21
Ordering Information (Industrial) . . . 22
Ordering Information (Extended) . . . 23
Ordering Information (Automotive) . . . 23
Ordering Information (Special Material Request) . . . 24
Revision History . . . 24

Pin Assignments – TSSOP Packages

Figure 1. Pin Assignments for TSSOP Packages

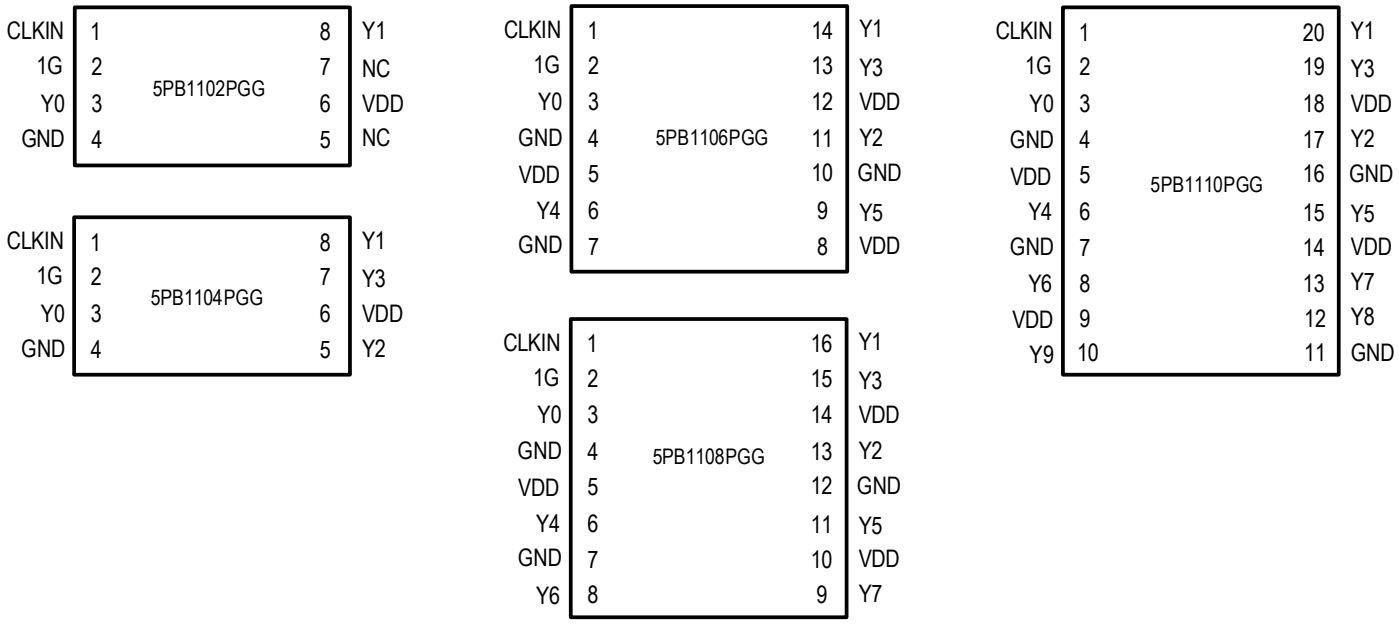

Pin Descriptions – TSSOP Packages

Table 1. Pin Descriptions for TSSOP Packages

Device Number	LVCMOS Clock Input	Clock Output Enable	LVCMOS Clock Output	Supply Voltage	Ground
	CLKIN	1G	Y0, Y1, ... Y9	V_{DD}	GND
5PB1102PGG	1	2	3, 8	6	4
5PB1104PGG	1	2	3, 8, 5, 7	6	4
5PB1106PGG	1	2	3, 14, 11, 13, 6, 9	5, 8, 12	4, 7, 10
5PB1108PGG	1	2	3, 16, 13, 15, 6, 11, 8, 9	5, 10, 14	4, 7, 12
5PB1110PGG	1	2	3, 20, 17, 19, 6, 15, 8, 13, 12, 10	5, 9, 14, 18	4, 7, 11, 16

©2018-2026 Renesas Electronics Corporation

Pin Assignments – DFN/VFQFPN Packages

Figure 2. Pin Assignments for DFN/QFN Packages

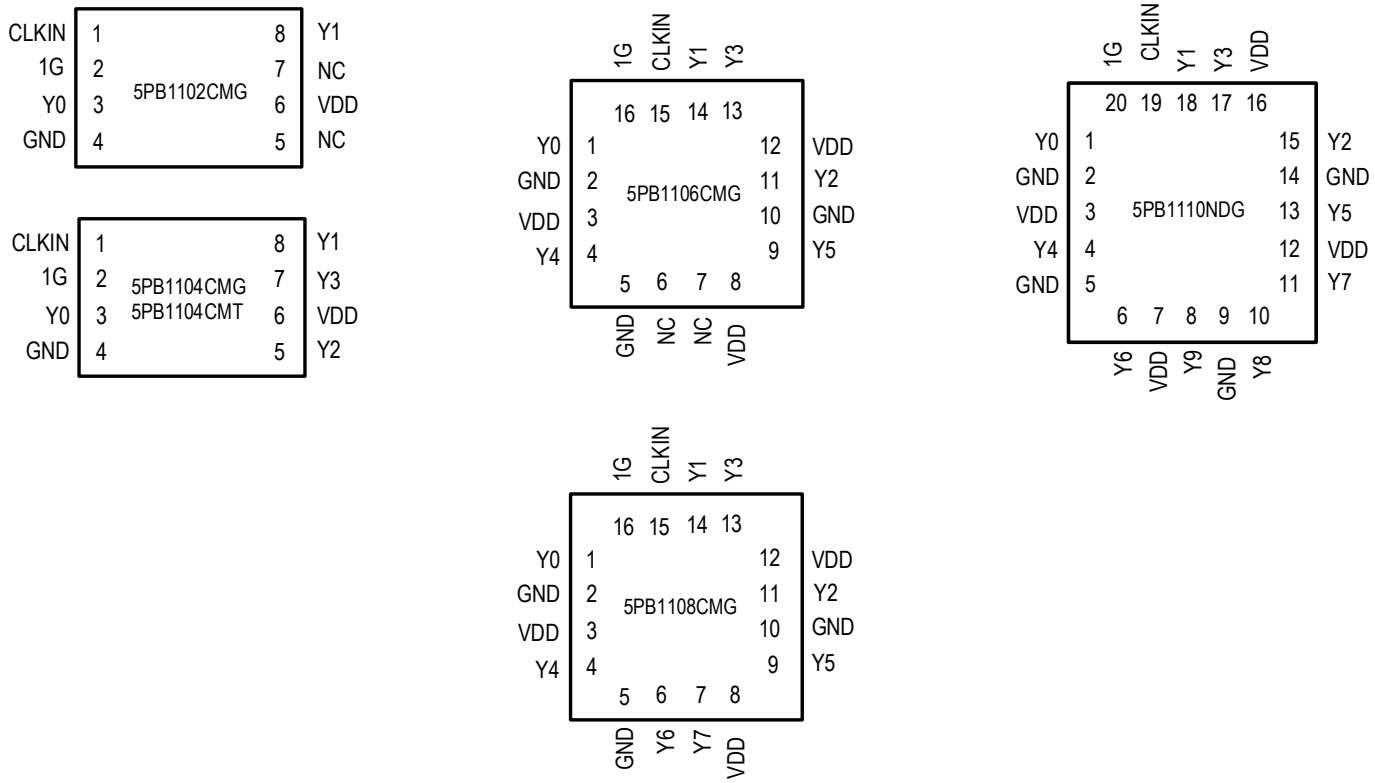

Pin Descriptions – DFN/VFQFPN Packages

Table 2. Pin Descriptions for DFN/VFQFPN Packages

Device Number	LVCMOS Clock Input	Clock Output Enable	LVCMOS Clock Output	Supply Voltage	Ground
	CLKIN	**1G**	**Y0, Y1, ... Y9**	**V_{DD}**	**GND**
5PB1102CMG	1	2	3, 8	6	4
5PB1104CMG 5PB1104CMT	1	2	3, 5, 7, 8	6	4
5PB1106CMG	15	16	1, 4, 9, 11, 13, 14	3, 8, 12	2, 5, 10
5PB1108CMG	15	16	1, 4, 6, 7, 9, 11, 13, 14	3, 8, 12	2, 5, 10
5PB1110NDG	19	20	1, 4, 6, 8, 10, 11, 13, 15, 17, 18	3, 7, 12, 16	2, 5, 9, 14

©2018-2026 Renesas Electronics Corporation

Output Logic Table

Inputs		Output
CLKIN	1G	Yn
X	L	L
L	H	L
H	H	H

After at least three cycles of input clock toggling. Output Enable function is asynchronous to eliminate any intermediate incorrect output clock cycles during transition which may cause frequency peaking to the downstream device.

Absolute Maximum Ratings

The absolute maximum ratings are stress ratings only. Stresses greater than those listed below can cause permanent damage to the device. Functional operation of the 5PB11xx at absolute maximum ratings is not implied. Exposure to absolute maximum rating conditions may affect device reliability.

Table 3. Absolute Maximum Ratings

Item	Rating
Supply Voltage, V_{DD}	3.8V
Output Enable and All Outputs	-0.4 V to V_{DD} + 0.5 V
Input Voltage, CLKIN	-0.4 V to 3.465V
Ambient Operating Temperature (Industrial)	-40 to +85°C
Ambient Operating Temperature (Extended and Automotive Grade 2)	-40 to +105°C
Ambient Operating Temperature (Automotive Grade 1)	-40 to +125°C
Storage Temperature	-65 to +150°C
Junction Temperature	125°C
Soldering Temperature	260°C

Recommended Operating Conditions

Table 4. Recommended Operating Conditions

Parameter	Minimum	Typical	Maximum	Unit
Ambient Operating Temperature (Industrial)	-40	-	+85	°C
Ambient Operating Temperature (Extended and Automotive Grade 2)	-40	-	+105	
Ambient Operating Temperature (Automotive Grade 1)	-40	-	+125	
Power Supply Voltage (measured in respect to GND)	+1.71	-	+3.465	V

Thermal Characteristics

Table 5. Thermal Characteristics

Package	Applies to	Θ_{JA}	Θ_{JC}	Θ_{JB}	Unit
8-TSSOP	5PB1102PGG, 5PB1104PGG	122.0	58.2	139.3	°C/W; still air
14-TSSOP	5PB1106PGG	84.5	44.2	64.5	°C/W; still air
16-TSSOP	5PB1108PGG	80.9	43.3	60.1	°C/W; still air
20-TSSOP	5PB1110PGG	72.5	37.9	49.8	°C/W; still air
8-DFN	5PB1102CMG, 5PB1104CMG 5PB1104CMT	120.2	99.4	63.3	°C/W; still air
16-VFQFPN	5PB1106CMG, 5PB1108CMG	115.6	83.1	61.8	°C/W; still air
20-VFQFPN	5PB1110NDG	49.6	94.7	5.1	°C/W; still air

DC Electrical Characteristics

V_{DD} = 1.8V, 2.5V, or 3.3V (see tables below)

Table 6. DC Electrical Characteristics – V_{DD} = 1.8V ±5%, Industrial and Extended

Symbol	Parameter	Applies to	Conditions	Minimum	Typical	Maximum	Unit
V_{DD}	Operating Voltage	Industrial and Extended [2]		1.71	1.8	1.89	V
V_{IH}	Input High Voltage, CLKIN [1]			0.7 × V_{DD}	-	-	V
V_{IL}	Input Low Voltage, CLKIN [1]			-	-	0.3 × V_{DD}	V
V_{IH}	Input High Voltage, 1G			1.6	-	V_{DD}	V
V_{IL}	Input Low Voltage, 1G			-	-	0.6	V
V_{OH}	Output High Voltage		I_{OH} = -5mA.	1.4	-	-	V
V_{OL}	Output Low Voltage		I_{OL} = 5mA.	-	-	0.4	V
Z_O	Nominal Output Impedance			-	50	-	Ω
C_{IN}	Input Capacitance		CLKIN, 1G pin.	-	5	-	pF
I_{DD}	Operating Supply Current, 5PB1102		100MHz, no load, 25°C.	-	6	8	mA
	Operating Supply Current, 5PB1104			-	12	13	
	Operating Supply Current, 5PB1106			-	15	18	
	Operating Supply Current, 5PB1108			-	20	23	
	Operating Supply Current, 5PB1110			-	23	27	
I_{IH}	Input High Leakage		V_{IN} = V_{DD}	-	-	5	µA
I_{IL}	Input Low Leakage		V_{IN} = 0V	-	-	5	µA

[1] Nominal switching threshold is $V_{DD}/2$.

[2] 5PB11xxPGGI, 5PB11xxPGGK, 5PB11xxCMGI, 5PB11xxCMGK. T_A = -40°C to +105°C unless stated otherwise.

Table 7. DC Electrical Characteristics – V_{DD} = 1.8V ±5%, Automotive

Symbol	Parameter	Applies to	Conditions	Minimum	Typical	Maximum	Unit
V_{DD}	Operating Voltage	Automotive [2][3]		1.71	1.8	1.89	V
V_{IH}	Input High Voltage, CLKIN [1]			0.7 × V_{DD}	-	-	V
V_{IL}	Input Low Voltage, CLKIN [1]			-	-	0.3 × V_{DD}	V
V_{IH}	Input High Voltage, 1G			1.2	-	V_{DD}	V
V_{IL}	Input Low Voltage, 1G			-	-	0.6	V
V_{OH}	Output High Voltage		I_{OH} = -5mA.	1.2	-	-	V
V_{OL}	Output Low Voltage		I_{OL} = 5mA.	-	-	0.45	V
Z_O	Nominal Output Impedance			-	50	-	Ω
C_{IN}	Input Capacitance		CLKIN, 1G pin.	-	5	-	pF
I_{DD}	Operating Supply Current	5PB1104 [2]	0.001MHz, C_L = 5pF.	-	0.7	1	mA
			0.008MHz, C_L = 5pF.	-	0.7	1	
			40MHz, C_L = 5pF.	-	11	13	
			100MHz, C_L = 5pF.	-	25	30	
			156.25MHz, C_L = 5pF.	-	37	47	
			200MHz, C_L = 5pF.	-	39	57	
I_{DD}	Operating Supply Current	5PB1110 [3]	0.001MHz, C_L = 5pF.	-	4.1	6.7	mA
			0.008MHz, C_L = 5pF.	-	4.2	6.7	
			40MHz, C_L = 5pF.	-	30	45	
			100MHz, C_L = 5pF.	-	65	82	
			156.25MHz, C_L = 5pF.	-	91	123	
			200MHz, C_L = 5pF.	-	96	137	
I_{IH}	Input High Leakage	Automotive [2][3]	V_{IN} = V_{DD}	-	-	5	µA
I_{IL}	Input Low Leakage		V_{IN} = 0V	-	-	5	µA

[1] Nominal switching threshold is V_{DD}/2.

[2] 5PB1104CMG1 and 5PB1104CMT1 T_A = -40°C to +125°C unless stated otherwise.

[3] 5PB1110NDG2 T_A = -40°C to +105°C unless stated otherwise.

Table 8. DC Electrical Characteristics – V_{DD} = 2.5V ±5%, Industrial and Extended

Symbol	Parameter	Applies to	Conditions	Minimum	Typical	Maximum	Unit
V_{DD}	Operating Voltage	Industrial and Extended [2]		2.375	2.5	2.625	V
V_{IH}	Input High Voltage, CLKIN [1]			0.7 × V_{DD}	-	-	V
V_{IL}	Input Low Voltage, CLKIN [1]			-	-	0.3 × V_{DD}	V
V_{IH}	Input High Voltage, 1G			1.8	-	V_{DD}	V
V_{IL}	Input Low Voltage, 1G			-	-	0.7	V
V_{OH}	Output High Voltage		I_{OH} = -8mA.	1.9	-	-	V
V_{OL}	Output Low Voltage		I_{OL} = 8mA.	-	-	0.5	V
Z_O	Nominal Output Impedance			-	50	-	Ω
C_{IN}	Input Capacitance		CLKIN, 1G pin.	-	5	-	pF
I_{DD}	Operating Supply Current, 5PB1102		100MHz, no load, 25°C.	-	9	11	mA
	Operating Supply Current, 5PB1104			-	15	18	
	Operating Supply Current, 5PB1106			-	21	24	
	Operating Supply Current, 5PB1108			-	27	31	
	Operating Supply Current, 5PB1110			-	32	37	
I_{IH}	Input High Leakage		V_{IN} = V_{DD}	-	-	5	µA
I_{IL}	Input Low Leakage		V_{IN} = 0V	-	-	5	µA

[1] Nominal switching threshold is $V_{DD}/2$.

[2] 5PB11xxPGGI, 5PB11xxPGGK, 5PB11xxCMGI, 5PB11xxCMGK. T_A = -40°C to +105°C unless stated otherwise.

Table 9. DC Electrical Characteristics – V_{DD} = 2.5V ±5%, Automotive

Symbol	Parameter	Applies to	Conditions	Minimum	Typical	Maximum	Unit
V_{DD}	Operating Voltage	Automotive [2][3]		2.375	2.5	2.625	V
V_{IH}	Input High Voltage, CLKIN [1]			0.7 × V_{DD}	-	-	V
V_{IL}	Input Low Voltage, CLKIN [1]			-	-	0.3 × V_{DD}	V
V_{IH}	Input High Voltage, 1G			1.8	-	V_{DD}	V
V_{IL}	Input Low Voltage, 1G			-	-	0.7	V
V_{OH}	Output High Voltage		I_{OH} = -8mA.	1.6	-	-	V
V_{OL}	Output Low Voltage		I_{OL} = 8mA.	-	-	0.625	V
Z_O	Nominal Output Impedance			-	50	-	Ω
C_{IN}	Input Capacitance		CLKIN, 1G pin.	-	5	-	pF
I_{DD}	Operating Supply Current	5PB1104 [2]	0.001MHz, C_L = 5pF.	-	0.9	1.3	mA
			0.008MHz, C_L = 5pF.	-	0.9	1.3	
			40MHz, C_L = 5pF.	-	15	17	
			100MHz, C_L = 5pF.	-	35	42	
			156.25MHz, C_L = 5pF.	-	52	67	
			200MHz, C_L = 5pF.	-	56	80	
I_{DD}	Operating Supply Current	5PB1110 [3]	0.001MHz, C_L = 5pF.	-	5.4	8.2	mA
			0.008MHz, C_L = 5pF.	-	5.4	8.2	
			40MHz, C_L = 5pF.	-	41	61	
			100MHz, C_L = 5pF.	-	91	116	
			156.25MHz, C_L = 5pF.	-	129	169	
			200MHz, C_L = 5pF.	-	140	195	
I_{IH}	Input High Leakage	Automotive [2][3]	V_{IN} = V_{DD}	-	-	5	µA
I_{IL}	Input Low Leakage		V_{IN} = 0V	-	-	5	µA

[1] Nominal switching threshold is V_{DD}/2.

[2] 5PB1104CMG1 and 5PB1104CMT1 T_A = -40°C to +125°C unless stated otherwise.

[3] 5PB1110NDG2 T_A = -40°C to +105°C unless stated otherwise.

Table 10. DC Electrical Characteristics – V_{DD} = 3.3V ±5%, Industrial and Extended

Symbol	Parameter	Applies to	Conditions	Minimum	Typical	Maximum	Unit
V_{DD}	Operating Voltage	Industrial and Extended [2]		3.135	3.3	3.465	V
V_{IH}	Input High Voltage, CLKIN [1]			0.7 × V_{DD}	-	-	V
V_{IL}	Input Low Voltage, CLKIN [1]			-	-	0.3 × V_{DD}	V
V_{IH}	Input High Voltage, 1G			2.0	-	V_{DD}	V
V_{IL}	Input Low Voltage, 1G			-	-	0.8	V
V_{OH}	Output High Voltage		I_{OH} = -12mA.	2.4	-	-	V
V_{OL}	Output Low Voltage		I_{OL} = 12mA.	-	-	0.7	V
Z_O	Nominal Output Impedance			-	50	-	Ω
C_{IN}	Input Capacitance		CLKIN, 1G pin.	-	5	-	pF
I_{DD}	Operating Supply Current, 5PB1102		100MHz, no load, 25°C.	-	12	13	mA
	Operating Supply Current, 5PB1104			-	20	22	
	Operating Supply Current, 5PB1106			-	25	30	
	Operating Supply Current, 5PB1108			-	35	38	
	Operating Supply Current, 5PB1110			-	40	45	
I_{IH}	Input High Leakage		V_{IN} = V_{DD}	-	-	5	µA
I_{IL}	Input Low Leakage		V_{IN} = 0V	-	-	5	µA

[1] Nominal switching threshold is $V_{DD}/2$.

[2] 5PB11xxPGGI, 5PB11xxPGGK, 5PB11xxCMGI, 5PB11xxCMGK. T_A = -40°C to +105°C unless stated otherwise.

Table 11. DC Electrical Characteristics – V_{DD} = 3.3V ±5%, Automotive

Symbol	Parameter	Applies to	Conditions	Minimum	Typical	Maximum	Unit
V_{DD}	Operating Voltage	Automotive [2][3]		3.135	3.3	3.465	V
V_{IH}	Input High Voltage, CLKIN [1]			0.7 × V_{DD}	-	-	V
V_{IL}	Input Low Voltage, CLKIN [1]			-	-	0.3 × V_{DD}	V
V_{IH}	Input High Voltage, 1G			2.1	-	V_{DD}	V
V_{IL}	Input Low Voltage, 1G			-	-	08	V
V_{OH}	Output High Voltage		I_{OH} = -12mA.	2.1	-	-	V
V_{OL}	Output Low Voltage	5PB1104 [2]	I_{OL} = 12mA.	-	-	0.825	V
		5PB1110 [3]	I_{OL} = 12mA.	-	-	0.850	V
Z_O	Nominal Output Impedance	Automotive [2][3]		-	50	-	Ω
C_{IN}	Input Capacitance		CLKIN, 1G pin.	-	5	-	pF
I_{DD}	Operating Supply Current	5PB1104 [2]	0.001MHz, C_L = 5pF.	-	1.2	1.7	mA
			0.008MHz, C_L = 5pF.	-	1.2	1.7	
			40MHz, C_L = 5pF.	-	19	22	
			100MHz, C_L = 5pF.	-	45	54	
			156.25MHz, C_L = 5pF.	-	67	87	
			200MHz, C_L = 5pF.	-	75	107	
I_{DD}	Operating Supply Current	5PB1110 [3]	0.001MHz, C_L = 5pF.	-	7.2	10.2	mA
			0.008MHz, C_L = 5pF.	-	7.2	10.2	
			40MHz, C_L = 5pF.	-	52	67	
			100MHz, C_L = 5pF.	-	117	147	
			156.25MHz, C_L = 5pF.	-	168	234	
			200MHz, C_L = 5pF.	-	186	256	
I_{IH}	Input High Leakage	Automotive [2][3]	V_{IN} = V_{DD}	-	-	5	µA
I_{IL}	Input Low Leakage		V_{IN} = 0V	-	-	5	µA

[1] Nominal switching threshold is V_{DD}/2.

[2] 5PB1104CMG1 and 5PB1104CMT1 T_A = -40°C to +125°C unless stated otherwise.

[3] 5PB1110NDG2 T_A = -40°C to +105°C unless stated otherwise.

AC Electrical Characteristics

V_{DD} = 1.8V, 2.5V, or 3.3V (see tables below).

Table 12. AC Electrical Characteristics – V_{DD} = 1.8V ±5%, Industrial and Extended

Symbol	Parameter	Applies to	Conditions	Minimum	Typical	Maximum	Unit
-	Input Frequency	Industrial and Extended [1]		0	-	200	MHz
t_{OR}	Output Rise Time (2pF load)		0.36V to 1.44V, C_L = 2pF.	-	0.5	0.75	ns
t_{OF}	Output Fall Time (2pF load)		1.44V to 0.36V, C_L = 2pF.	-	0.5	0.75	ns
t_{OR}	Output Rise Time (5pF load)		0.36V to 1.44V, C_L = 5pF.	-	0.8	1.0	ns
t_{OF}	Output Fall Time (5pF load)		1.44V to 0.36V, C_L = 5pF.	-	0.8	1.0	ns
$t_{START-UP}$	Start-up Time		Part start-up time for valid outputs after V_{DD} ramp-up.	-	-	3	ms
t_{PD}	Propagation Delay [2]			1.5	-	2.5	ns
-	Buffer Additive Phase Jitter, RMS		156.25MHz, Integration Range: 12kHz–20MHz.	-	-	0.05	ps
-	Output to Output Skew, 5PB1102/04		Rising edges at V_{DD}/2. [3]	-	35	50	ps
-	Output to Output Skew, 5PB1106		Rising edges at V_{DD}/2. [3]	-	35	58	ps
-	Output to Output Skew, 5PB1108/10		Rising edges at V_{DD}/2. [3]	-	45	65	ps
-	Device to Device Skew		Rising edges at V_{DD}/2.	-	-	200	ps
t_{EN}	Output Enable Time		$C_L \leq$ 5pF.	-	-	3	cycles
t_{DIS}	Output Disable Time		$C_L \leq$ 5pF.	-	-	3	cycles
t_{DC}	Duty Cycle [4]			-	50	-	%

[1] 5PB11xxPGGI, 5PB11xxPGGK, 5PB11xxCMGI, 5PB11xxCMGK. T_A = -40°C to +105°C unless stated otherwise.

[2] With rail-to-rail input clock.

[3] Between any 2 outputs with equal loading.

[4] Duty cycle on outputs will match incoming clock duty cycle when VIH on CLKIN pin equals VDD power supply voltage. Consult Renesas for tight duty cycle clock generators.

Table 13. AC Electrical Characteristics – V_{DD} = 1.8V ±5%, Automotive

Symbol	Parameter	Applies to	Conditions	Minimum	Typical	Maximum	Unit
-	Input Frequency	Automotive [1][5]		0	-	200	MHz
t_{OR}	Output Rise Time (5pF load)		0.36V to 1.44V, C_L = 5pF.	-	0.65	1.2	ns
t_{OF}	Output Fall Time (5pF load)	5PB1104[1]	1.44V to 0.36V, C_L = 5pF.	-	0.65	1.2	ns
		5PB1110[5]	1.44V to 0.36V, C_L = 5pF.	-	0.65	1.25	ns
$t_{START-UP}$	Start-up Time	5PB1104[1]	Part start-up time for valid outputs after V_{DD} ramp-up.	-	-	3	ms
		5PB1110[5]	Part start-up time for valid outputs after V_{DD} ramp-up.	-	-	3.2	ms
t_{PD}	Propagation Delay [2]	5PB1104[1]		1.0	-	3.4	ns
		5PB1110[5]		1.0	-	4.0	ns
-	Buffer Additive Phase Jitter, RMS	5PB1104[1]	156.25MHz, Integration Range: 12kHz–20MHz.	-	-	0.06	ps
		5PB1110[5]	156.25MHz, Integration Range: 12kHz–20MHz.	-	-	0.068	ps
-	Output to Output Skew	Automotive [1][5]	Rising edges at V_{DD}/2. [3]	-	35	87	ps
-	Device to Device Skew		Rising edges at V_{DD}/2.	-	-	200	ps
t_{EN}	Output Enable Time		$C_L \leq$ 5pF.	-	-	3	cycles
t_{DIS}	Output Disable Time		$C_L \leq$ 5pF.	-	-	3	cycles
t_{DC}	Duty Cycle [4]			-	50	-	%

[1] 5PB1104CMG1 and 5PB1104CMT1 T_A = -40°C to +125°C unless stated otherwise.

[2] With rail-to-rail input clock.

[3] Between any 2 outputs with equal loading.

[4] Duty cycle on outputs will match incoming clock duty cycle when VIH on CLKIN pin equals VDD power supply voltage. Consult Renesas for tight duty cycle clock generators.

[5] 5PB1110NDG2 T_A = -40°C to +105°C unless stated otherwise.

Table 14. AC Electrical Characteristics – V_{DD} = 2.5V ±5%, Industrial and Extended

Symbol	Parameter	Applies to	Conditions	Minimum	Typical	Maximum	Unit
-	Input Frequency	Industrial and Extended [1]		0	-	200	MHz
t_{OR}	Output Rise Time (2pF load)		0.5V to 2.0V, C_L = 2pF.	-	0.4	0.7	ns
t_{OF}	Output Fall Time (2pF load)		2.0V to 0.5V, C_L = 2pF.	-	0.4	0.7	ns
t_{OR}	Output Rise Time (5pF load)		0.5V to 2.0V, C_L = 5pF.	-	0.75	1.0	ns
t_{OF}	Output Fall Time (5pF load)		2.0V to 0.5V, C_L = 5pF.	-	0.75	1.0	ns
$t_{START-UP}$	Start-up Time		Part start-up time for valid outputs after V_{DD} ramp-up.	-	-	3	ms
t_{PD}	Propagation Delay, 5PB1102/04 [2]			1.9	-	2.9	ns
	Propagation Delay, 5PB1106/08 [2]			2.0	-	3.3	ns
	Propagation Delay, 5PB1110 [2]			2.0	-	3.0	ns
-	Buffer Additive Phase Jitter, RMS		156.25MHz, Integration Range: 12kHz–20MHz.	-	-	0.05	ps
-	Output to Output Skew, 5PB1102/04		Rising edges at V_{DD}/2. [3]	-	35	50	ps
-	Output to Output Skew, 5PB1106		Rising edges at V_{DD}/2. [3]	-	35	58	ps
-	Output to Output Skew, 5PB1108/10		Rising edges at V_{DD}/2. [3]	-	45	65	ps
-	Device to Device Skew		Rising edges at V_{DD}/2.	-	-	200	ps
t_{EN}	Output Enable Time		$C_L \leq$ 5pF.	-	-	3	cycles
t_{DIS}	Output Disable Time		$C_L \leq$ 5pF.	-	-	3	cycles
t_{DC}	Duty Cycle [4]			-	50	-	%

[1] 5PB11xxPGGI, 5PB11xxPGGK, 5PB11xxCMGI, 5PB11xxCMGK. T_A = -40°C to +105°C unless stated otherwise.

[2] With rail-to-rail input clock.

[3] Between any 2 outputs with equal loading.

[4] Duty cycle on outputs will match incoming clock duty cycle when VIH on CLKIN pin equals VDD power supply voltage. Consult Renesas for tight duty cycle clock generators.

Table 15. AC Electrical Characteristics – V_{DD} = 2.5V ±5%, Automotive

Symbol	Parameter	Applies to	Conditions	Minimum	Typical	Maximum	Unit
-	Input Frequency	Automotive [1][5]		0	-	200	MHz
t_{OR}	Output Rise Time (5pF load)		0.5V to 2.0V, C_L = 5pF.	-	0.63	1.2	ns
t_{OF}	Output Fall Time (5pF load)		2.0V to 0.5V, C_L = 5pF.	-	0.63	1.2	ns
$t_{START-UP}$	Start-up Time		Part start-up time for valid outputs after V_{DD} ramp-up.	-	-	3	ms
t_{PD}	Propagation Delay [2]	5PB1104 [1]		1.0	-	4.5	ns
		5PB1110[5]		-	-	4.75	ns
-	Buffer Additive Phase Jitter, RMS	5PB1104 [1]	156.25MHz, Integration Range: 12kHz–20MHz.	-	-	0.06	ps
		5PB1110[5]	156.25MHz, Integration Range: 12kHz–20MHz.	-	-	0.065	ps
-	Output to Output Skew	Automotive [1][5]	Rising edges at V_{DD}/2. [3]	-	35	87	ps
-	Device to Device Skew		Rising edges at V_{DD}/2.	-	-	200	ps
t_{EN}	Output Enable Time		$C_L \leq$ 5pF.	-	-	3	cycles
t_{DIS}	Output Disable Time		$C_L \leq$ 5pF.	-	-	3	cycles
t_{DC}	Duty Cycle [4]			-	50	-	%

[1] 5PB1104CMG1 and 5PB1104CMT1 T_A = -40°C to +125°C unless stated otherwise.

[2] With rail-to-rail input clock.

[3] Between any 2 outputs with equal loading.

[4] Duty cycle on outputs will match incoming clock duty cycle when VIH on CLKIN pin equals VDD power supply voltage. Consult Renesas for tight duty cycle clock generators.

[5] 5PB1110NDG2 T_A = -40°C to +105°C unless stated otherwise.

Table 16. AC Electrical Characteristics – V_{DD} = 3.3V ±5%, Industrial and Extended

Symbol	Parameter	Applies to	Conditions	Minimum	Typical	Maximum	Unit
-	Input Frequency	Industrial and Extended [1]		0	-	200	MHz
t_{OR}	Output Rise Time (2pF load)		0.66V to 2.64V, C_L = 2pF.	-	0.45	0.6	ns
t_{OF}	Output Fall Time (2pF load)		2.64V to 0.66V, C_L = 2pF.	-	0.45	0.6	ns
t_{OR}	Output Rise Time (5pF load)		0.66V to 2.64V, C_L = 5pF.	-	0.7	1.0	ns
t_{OF}	Output Fall Time (5pF load)		2.64V to 0.66V, C_L = 5pF.	-	0.7	1.0	ns
$t_{START-UP}$	Start-up Time		Part start-up time for valid outputs after V_{DD} ramp-up.	-	-	3	ms
t_{PD}	Propagation Delay, 5PB1102/04 [2]			1.7	-	2.4	ns
	Propagation Delay, 5PB1106/08 [2]			1.7	-	2.7	ns
	Propagation Delay, 5PB1110 [2]			1.7	-	2.5	ns
-	Buffer Additive Phase Jitter, RMS		156.25MHz, Integration Range: 12kHz–20MHz.	-	-	0.05	ps
-	Output to Output Skew, 5PB1102/04		Rising edges at V_{DD}/2. [3]	-	35	50	ps
-	Output to Output Skew, 5PB1106		Rising edges at V_{DD}/2. [3]	-	35	58	ps
-	Output to Output Skew, 5PB1108/10		Rising edges at V_{DD}/2. [3]	-	45	65	ps
-	Device to Device Skew		Rising edges at V_{DD}/2.	-	-	200	ps
t_{EN}	Output Enable Time		$C_L \leq$ 5pF.	-	-	3	cycles
t_{DIS}	Output Disable Time		$C_L \leq$ 5pF.	-	-	3	cycles
t_{DC}	Duty Cycle [4]			-	50	-	%

[1] 5PB11xxPGGI, 5PB11xxPGGK, 5PB11xxCMGI, 5PB11xxCMGK. T_A = -40°C to +105°C unless stated otherwise.

[2] With rail-to-rail input clock.

[3] Between any 2 outputs with equal loading.

[4] Duty cycle on outputs will match incoming clock duty cycle when VIH on CLKIN pin equals VDD power supply voltage. Consult Renesas for tight duty cycle clock generators.

Table 17. AC Electrical Characteristics – V_{DD} = 3.3V ±5%, Automotive

Symbol	Parameter	Applies to	Conditions	Minimum	Typical	Maximum	Unit
-	Input Frequency	Automotive [1][5]		0	-	200	MHz
t_{OR}	Output Rise Time (5pF load)		0.66V to 2.64V, C_L = 5pF.	-	0.61	1.2	ns
t_{OF}	Output Fall Time (5pF load)		2.64V to 0.66V, C_L = 5pF.	-	0.61	1.2	ns
$t_{START-UP}$	Start-up Time		Part start-up time for valid outputs after V_{DD} ramp-up.	-	-	3	ms
t_{PD}	Propagation Delay [2]	5PB1104 [1]		1.0	-	3.4	ns
		5PB1110 [5]		1.0	-	4.0	ns
-	Buffer Additive Phase Jitter, RMS	5PB1104 [1]	156.25MHz, Integration Range: 12kHz–20MHz.	-	-	0.05	ps
		5PB1110 [5]	156.25MHz, Integration Range: 12kHz–20MHz.	-	-	0.065	ps
-	Output to Output Skew	Automotive [1][5]	Rising edges at V_{DD}/2. [3]	-	35	87	ps
-	Device to Device Skew		Rising edges at V_{DD}/2.	-	-	200	ps
t_{EN}	Output Enable Time		$C_L \leq$ 5pF.	-	-	3	cycles
t_{DIS}	Output Disable Time		$C_L \leq$ 5pF.	-	-	3	cycles
t_{DC}	Duty Cycle [4]			-	50	-	%

[1] 5PB1104CMG1 and 5PB1104CMT1 only. T_A = -40°C to +125°C unless stated otherwise.

[2] With rail-to-rail input clock.

[3] Between any 2 outputs with equal loading.

[4] Duty cycle on outputs will match incoming clock duty cycle when VIH on CLKIN pin equals VDD power supply voltage. Consult Renesas for tight duty cycle clock generators.

[5] 5PB1110NDG2 T_A = -40°C to +105°C unless stated otherwise.

Phase Noise Plots

The phase noise plots show the low additive jitter of the 5PB11xx high-performance buffer. With an integration range of 12kHz to 20MHz, the reference input has about 58.9fs of RMS phase jitter while the output of 5PB11xx has about 70.9fs of RMS phase jitter. This results in a low additive phase jitter of only 39fs.

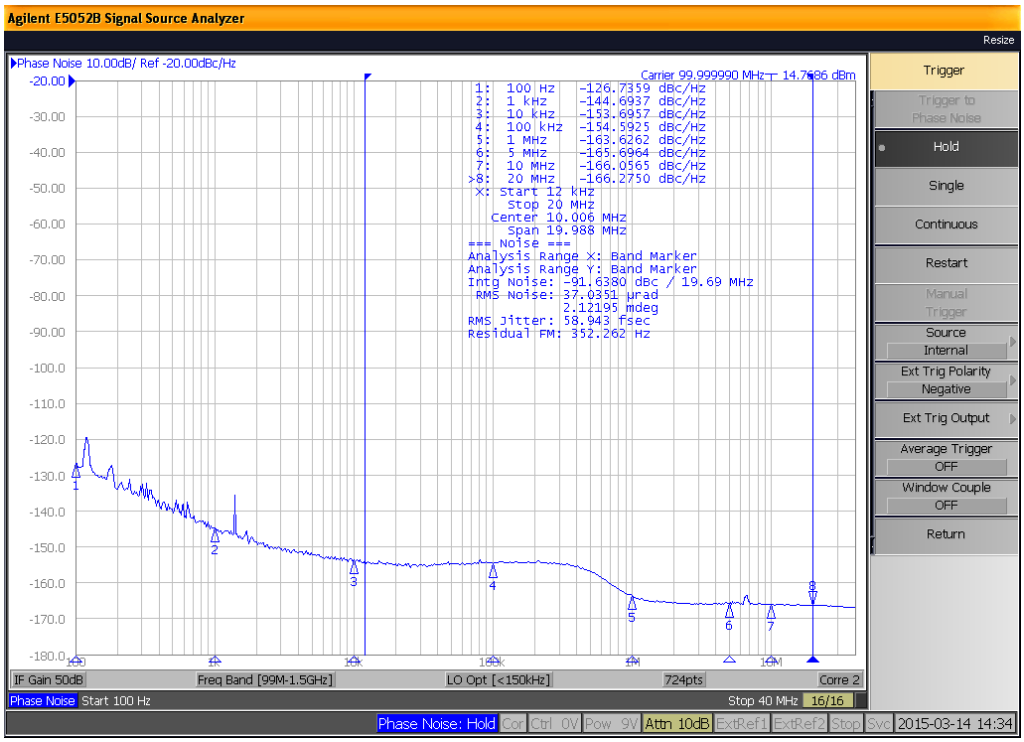

Reference Phase Noise 58.9fs (12kHz to 20MHz)

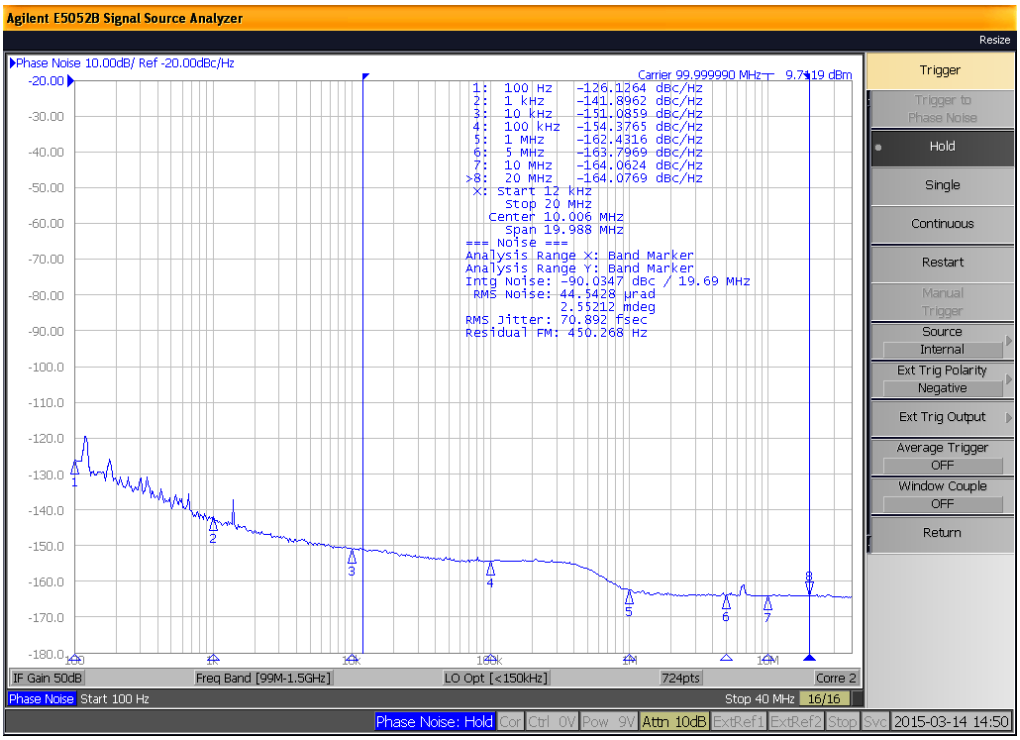

Output Phase Noise 70.9fs (12kHz to 20MHz)

Test Load and Circuit

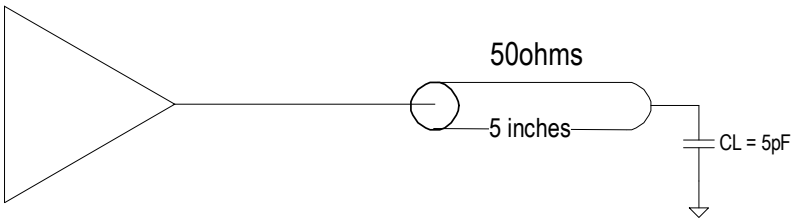

Package Outline Drawings

The package outline drawings are located at the end of this document and are accessible from the Renesas website (see the Ordering Information tables for POD links). The package information is the most current data available and is subject to change without revision of this document.

Marking Diagrams (Industrial)

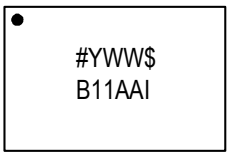

8-pin TSSOP

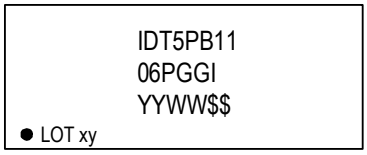

14-pin TSSOP

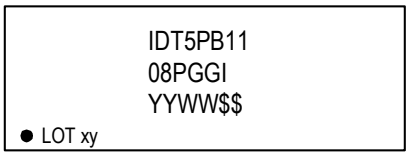

16-pin TSSOP

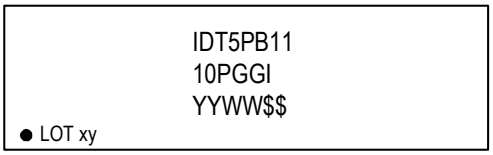

20-pin TSSOP

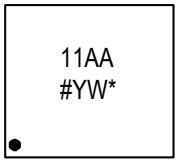

8-pin DFN

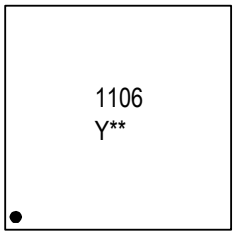

16-pin VFQFPN

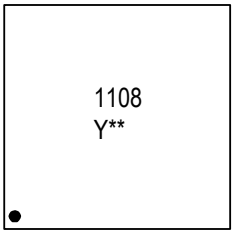

16-pin VFQFPN

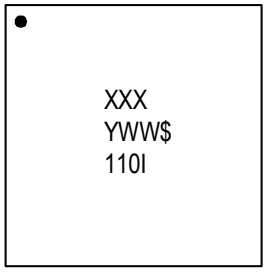

20-pin VFQFPN

- “AA” denotes the last two digits of the part number for 8-TSSOP and DFN (e.g. 02, 04).
- “**” is the lot sequence.
- “XXX” denotes the last three characters of the Asm lot (20-VFQFPN only).
- “YYWW”, “YWW”, “YW”, or “Y” is the last digit(s) of the year and work week that the part was assembled.
- “$” denotes the mark code.
- “G” after the two-letter package code denotes RoHS compliant package.
- “I” denotes industrial temperature range device.
- “#” denotes stepping number.

Marking Diagrams (Extended)

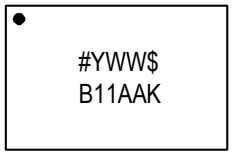

8-pin TSSOP

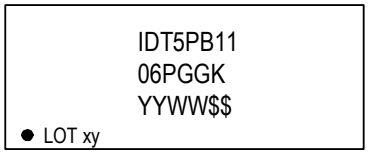

14-pin TSSOP

16-pin TSSOP

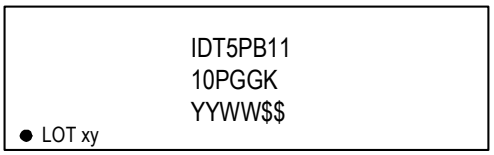

20-pin TSSOP

8-pin DFN

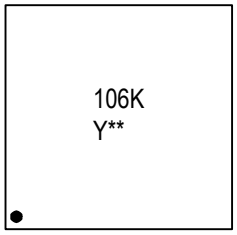

16-pin VFQFPN

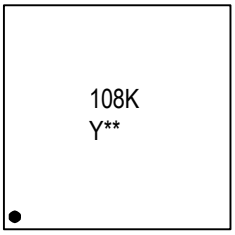

16-pin VFQFPN

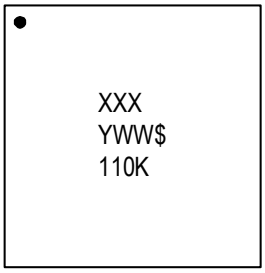

20-pin VFQFPN

- “AA” denotes the last two digits of the part number for 8-TSSOP and DFN (e.g. 02, 04).
- “**” is the lot sequence.
- “XXX” denotes the last three characters of the Asm lot (20-VFQFPN only).
- “YYWW”, “YWW”, “YW”, or “Y” is the last digit(s) of the year and week that the part was assembled.
- “$” denotes the mark code.
- “G” after the two-letter package code denotes RoHS compliant package.
- “K” denotes extended temperature range device.
- “#” denotes stepping number.

Marking Diagrams (Automotive)

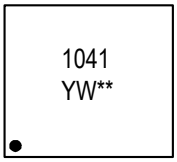

8-pin DFN

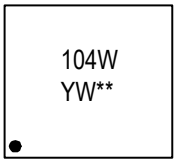

8-pin DFN (wettable flank)

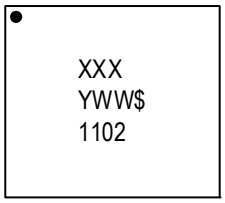

20-pin VFQFPN (wettable flank)

- Line 1:
  - For 8-pin devices: truncated part number; last number is the temperature grade: 1 = Automotive Grade 1.
  - For 20-pin device: “XXX” denotes ASM lot number.
- Line 2:
  - “YW” or “YWW” is the last digit(s) of the year and work week that the part was assembled.
  - “**” denotes the lot sequence number.
- “1102” on 20-pin device denotes truncated part number; last number is the temperature grade: 2 = Automotive Grade 2.

Ordering Information (Industrial)

Part Number	Package	Carrier Type	Temperature Range
5PB1102PGGI	4.4mm body, 8-TSSOP	Tubes	-40 to +85°C
5PB1102PGGI8		Tape and Reel	
5PB1104PGGI		Tubes	
5PB1104PGGI8		Tape and Reel	
5PB1106PGGI	4.4mm body, 14-TSSOP	Tubes	
5PB1106PGGI8		Tape and Reel	
5PB1108PGGI	4.4mm body, 16-TSSOP	Tubes	
5PB1108PGGI8		Tape and Reel	
5PB1110PGGI	4.4mm body, 20-TSSOP	Tubes	
5PB1110PGGI8		Tape and Reel	
5PB1102CMGI	2.0 × 2.0 × 0.5 mm, 8-DFN	Cut Tape	
5PB1102CMGI8		Tape and Reel	
5PB1104CMGI		Cut Tape	
5PB1104CMGI8		Tape and Reel	
5PB1104CMGI/W[a]		Tape and Reel	
5PB1106CMGI	2.5 × 2.5 × 0.5 mm,16-VFQFPN	Cut Tape	
5PB1106CMGI8		Tape and Reel	
5PB1108CMGI		Cut Tape	
5PB1108CMGI8		Tape and Reel	
5PB1110NDGI	3.0 × 3.0 × 0.90 mm, 20-VFQFPN	Tubes	
5PB1110NDGI8		Tape and Reel	

[a] "/W" stands for tape and reel with pin 1 orientation: EIA-481-D. All other tape and reels options come with EIA-481-C pin 1 orientation.

Ordering Information (Extended)

Part Number	Package	Carrier Type	Temperature Range
5PB1102PGGK	4.4mm body, 8-TSSOP	Tubes	-40 to +105°C
5PB1102PGGK8		Tape and Reel	
5PB1104PGGK		Tubes	
5PB1104PGGK8		Tape and Reel	
5PB1106PGGK	4.4mm body, 14-TSSOP	Tubes	
5PB1106PGGK8		Tape and Reel	
5PB1108PGGK	4.4mm body, 16-TSSOP	Tubes	
5PB1108PGGK8		Tape and Reel	
5PB1110PGGK	4.4mm body, 20-TSSOP	Tubes	
5PB1110PGGK8		Tape and Reel	
5PB1102CMGK	2.0 × 2.0 × 0.5 mm, 8-DFN	Cut Tape	
5PB1102CMGK8		Tape and Reel	
5PB1104CMGK		Cut Tape	
5PB1104CMGK8		Tape and Reel	
5PB1104CMGK/W[a]		Tape and Reel	
5PB1106CMGK	2.5 × 2.5 × 0.5 mm,16-VFQFPN	Cut Tape	
5PB1106CMGK8		Tape and Reel	
5PB1108CMGK		Cut Tape	
5PB1108CMGK8		Tape and Reel	
5PB1110NDGK	3.0 × 3.0 × 0.90 mm, 20-VFQFPN	Tubes	
5PB1110NDGK8		Tape and Reel	

[a] "/W" stands for tape and reel with pin 1 orientation: EIA-481-D. All other tape and reels options come with EIA-481-C pin 1 orientation.

Ordering Information (Automotive)

Part Number	Package	Carrier Type	Temperature Range
5PB1104CMG1	2.0 × 2.0 × 0.5 mm, 8-DFN	Cut Tape	-40° to +125°C
5PB1104CMG18		Tape and Reel	
5PB1104CMT1	2.0 × 2.0 × 0.75 mm, 8-DFN, Wettable Flank	Cut Tape	-40° to +125°C
5PB1104CMT18		Tape and Reel	
5PB1110NDG2	3.0 × 3.0 × 0.90 mm, 20-VFQFPN, Wettable Flank	Tube	-40° to +105°C
5PB1110NDG28		Tape and Reel	

Ordering Information (Special Material Request)

For customers with a special material request, an alphanumeric code is assigned to the standard part number (see examples below). Contact Renesas for more information.

Standard Part Number Example	Special Material Request Part Number[a]
5PB1104CMGI	5PB1104CMGI/X
5PB1104CMGI8	5PB1104CMGI8/X

[a] "/X" is a code added to the standard part number when a customer has a special request for material. If no special material is requested, "/X" can be omitted.

Revision History

Date	Description of Change
August 14, 2026	Updated Marking Diagrams.
June 26, 2026	Updated V_{IH} (1G) minimum to 1.2V from 1.6V in Table 7.
December 13, 2023	Updated POD link for 8-DFN to CMG8D1.
September 15, 2023	Updated POD links for 8-DFN and 20-VFQFPN Wettable Flank options in Ordering Information (Automotive).
March 31, 2021	Added Ordering Information (Special Material Request) table.
March 11, 2021	Added 5PB1110NDG2 automotive device information.
January 5, 2021	Updated supply voltage pin numbers for 5PB1110PGG in Pin Descriptions – TSSOP Packages table.
December 2, 2020	▪ Added 5PB1104CMG/W option to the Ordering Information (Extended) table. ▪ Updated Package Outline Drawings links.
September 29, 2020	Updated marking diagrams for 5PB1106/08/10PGGI and 5PB1106/08/10PGGK.
January 31, 2020	Rebranded the document as Renesas. No technical changes were made.
December 4, 2019	Added Input High and Low Leakage parameters to tables 6–11.
May 31, 2019	▪ Added 5PB1104CMT1 wettable flank package information. ▪ Updated Propagation Delay values for automotive.
December 18, 2018	▪ Updated t_{PD} and skew values. ▪ Added 5PB1104CMG1 automotive part information.
October 24, 2018	Initial release.

Package Outline Drawing

Package Code: PGG8D1
8-TSSOP 4.4 x 3.0 x 1.0 mm Body, 0.65mm Pitch
PSC-4768-01, Revision: 02, Date Created: Apr 29, 2024

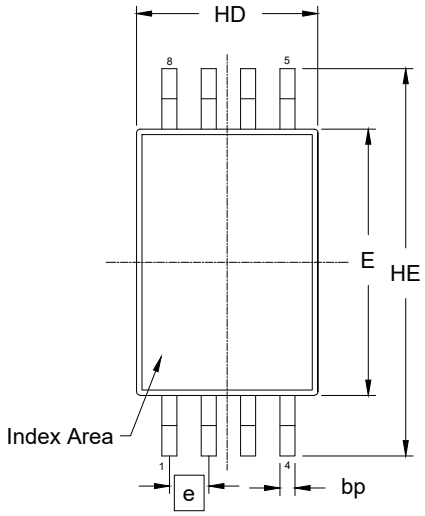

TOP VIEW

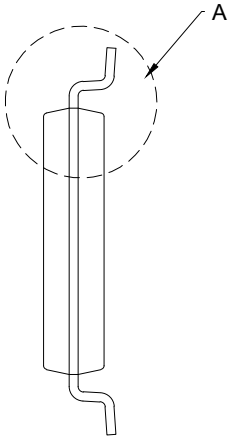

SIDE VIEW

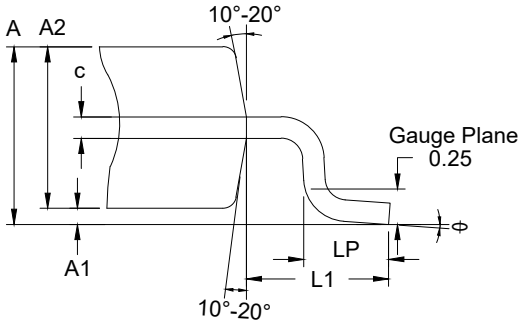

Detail A
(Rotated 90° CW)

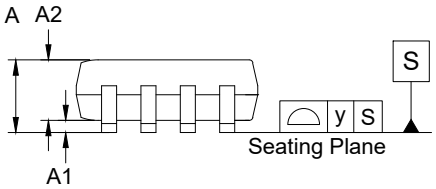

SIDE VIEW

Reference Symbol	Dimension in mm		
	Min	Nom	Max
E	4.30	4.40	4.50
A2	0.80	-	1.05
HD	2.90	3.00	3.10
HE	6.20	6.40	6.60
A	0.85	-	1.20
A1	0.05	0.10	0.15
bp	0.19	0.25	0.30
c	0.09	-	0.20
θ	0.00	-	8.00
e	0.65 BSC		
y	-	-	0.10
LP	0.50	0.625	0.75
L1	-	1.00	-

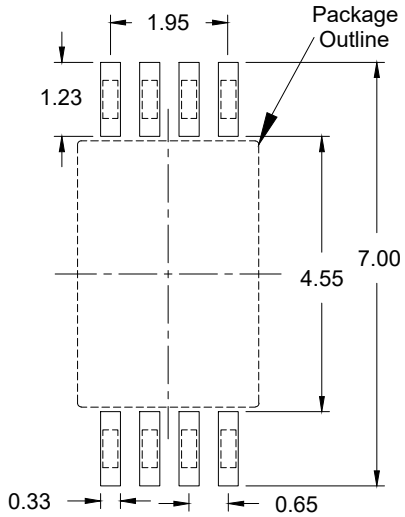

RECOMMENDED LAND PATTERN
(PCB Top View, SMD Design)

NOTES:

1. JEDEC compatible.
2. All dimensions are in mm and angles are in degrees.
3. Use ±0.05 mm for the non-toleranced dimensions.
4. Foot length is measured at gauge plane 0.25 mm above seating plane.

© Renesas Electronics Corporation

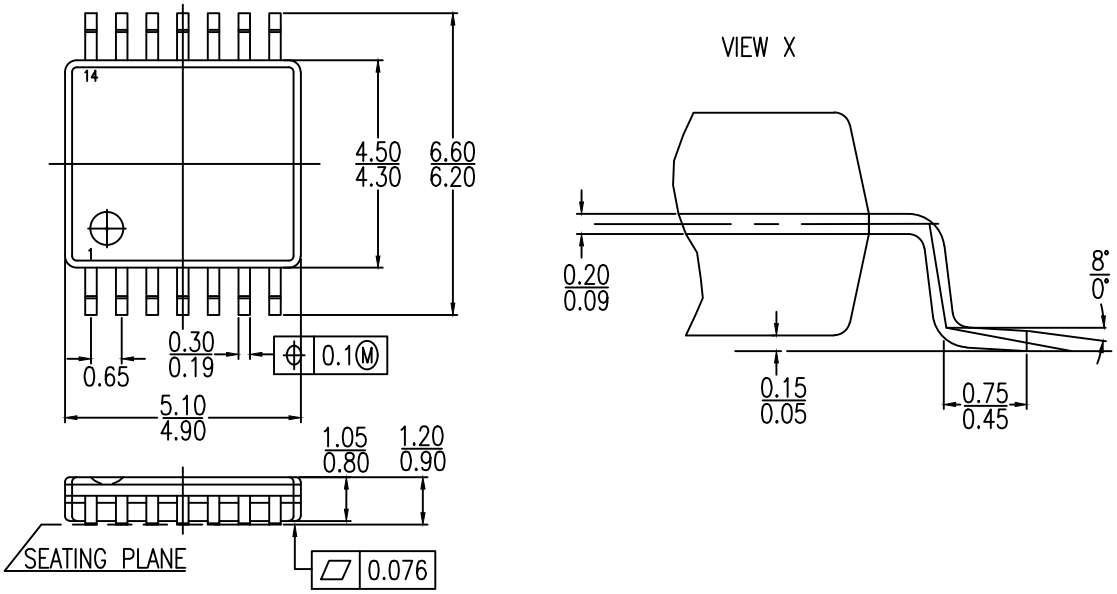

NOTE:
1. ALL DIMENSIONS ARE IN MILLIMETERS

© Renesas Electronics Corporation

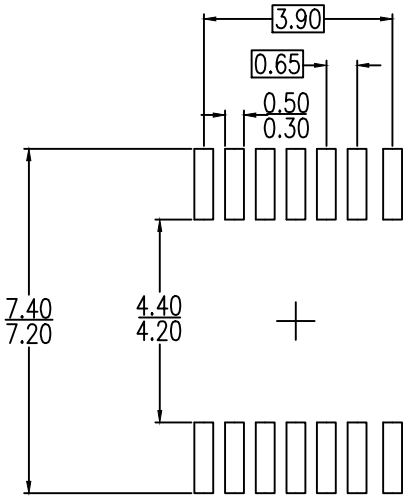

LAND PATTERN DIMENSIONS

NOTE:
1. ALL DIMENSIONS ARE IN MILLIMETERS

Package Revision History		
Date Created	Rev No.	Description
Mar, 10 2017	Rev 01	Added Land Pattern
Dec, 19 2017	Rev 02	New Format

© Renesas Electronics Corporation

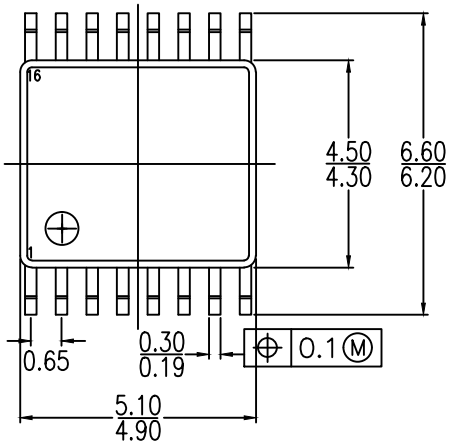

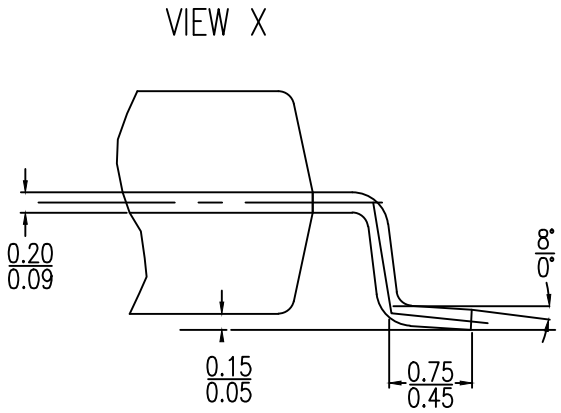

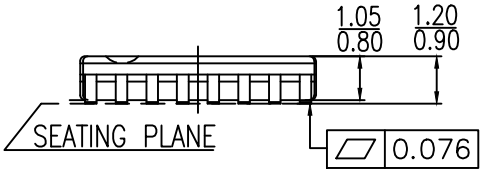

NOTE:
1. ALL DIMENSIONS ARE IN MILLIMETERS

© Renesas Electronics Corporation

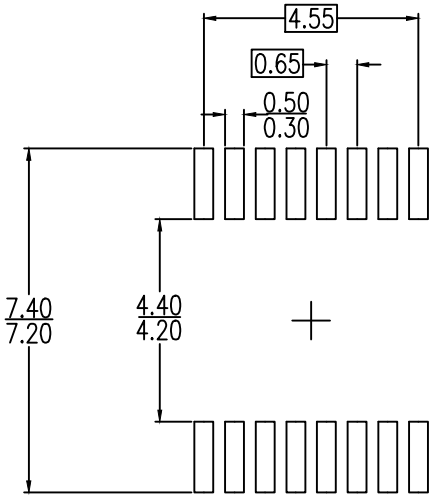

LAND PATTERN DIMENSIONS

NOTE:
1. ALL DIMENSIONS ARE IN MILLIMETERS

Package Revision History		
Date Created	Rev No.	Description
Jan 26, 2018	Rev 00	Revised from PSC-4056-02 PGG16

© Renesas Electronics Corporation

20-TSSOP Package Outline Drawing

4.4 mm Body 0.65mm Pitch

PGG20D1, PSC-4770-01, Rev 00, Page 1

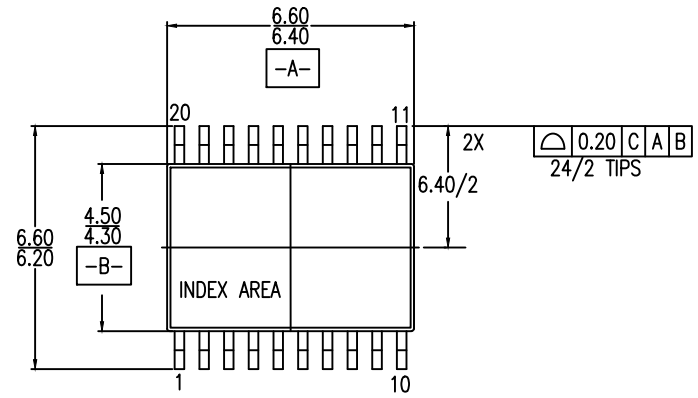

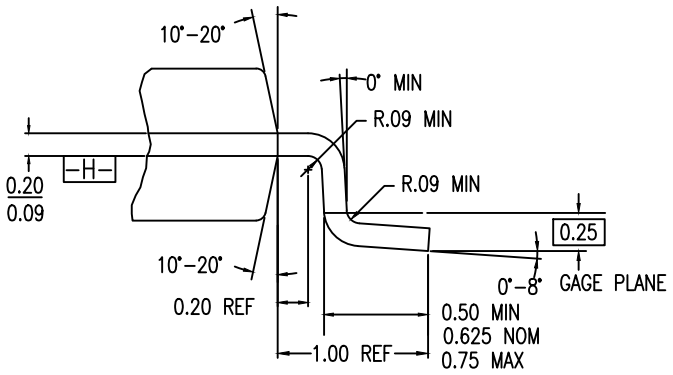

DETAIL B

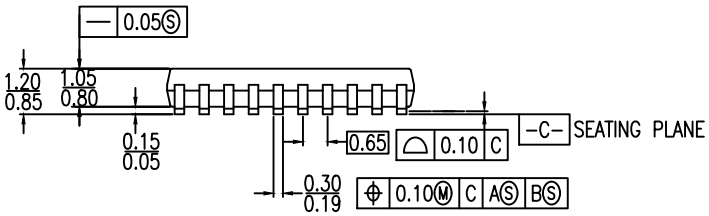

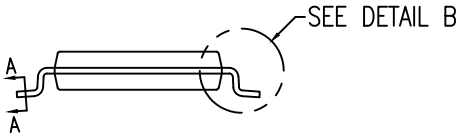

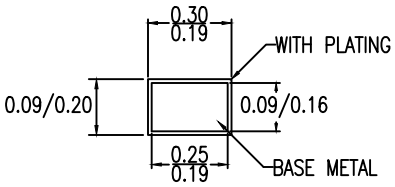

SECTION A-A

NOTES:

1. ALL DIMENSIONING AND TOLERANCING CONFORM TO ANSI Y14.5M-1982
2. ALL DIMENSION ARE IN MM.

© Renesas Electronics Corporation

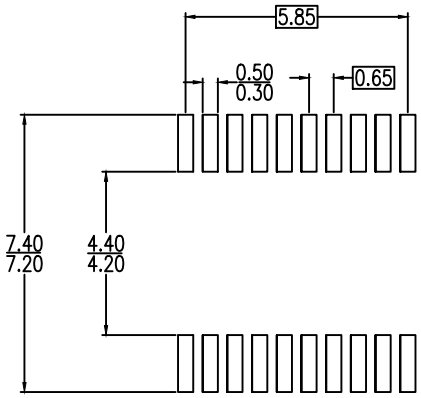

RECOMMENDED LAND PATTERN DIMENSIONS

NOTES:

1. ALL DIMENSIONS ARE IN MILLIMETERS

Package Revision History		
Date Created	Rev No.	Description
July 24, 2018	Rev 00	Initial Release

© Renesas Electronics Corporation

Package Outline Drawing

Package Code:CMG8D1
8-DFN 2.0 x 2.0 x 0.5 mm Body, 0.5mm Pitch
PSC-4490-01, Revision: 00, Date Created: Oct 05, 2023

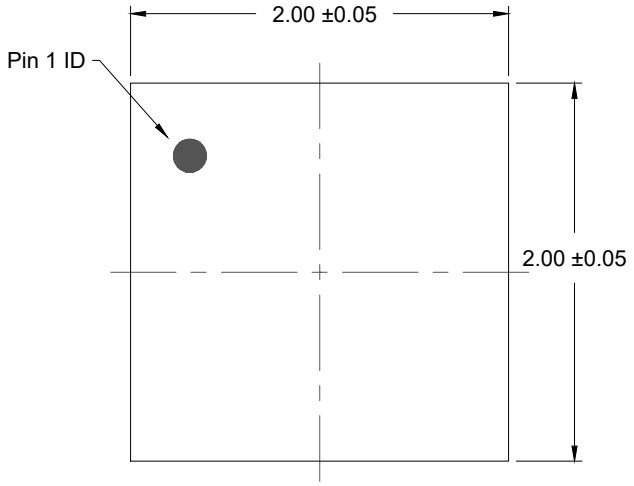

TOP VIEW

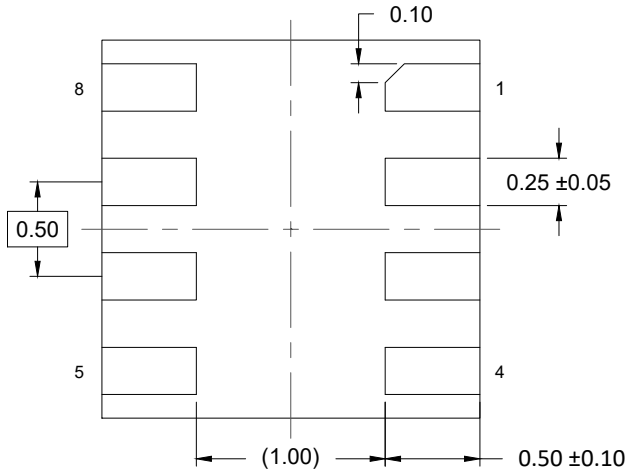

BOTTOM VIEW

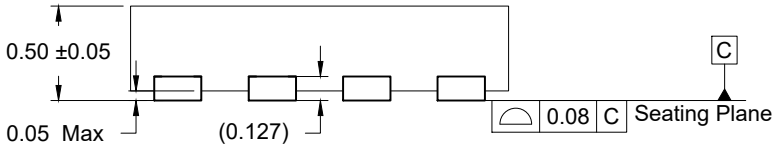

SIDE VIEW

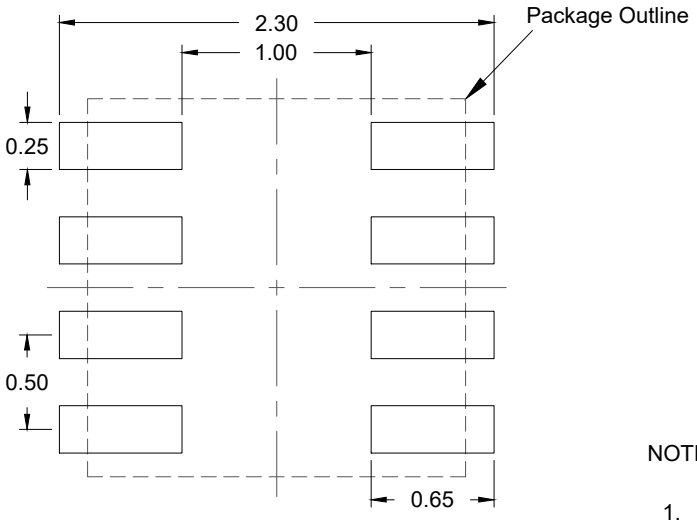

RECOMMENDED LAND PATTERN
(PCB Top View, NSMD Design)

NOTES:

1. JEDEC compatible.
2. All dimensions are in mm and angles are in degrees.
3. Use ±0.05 mm for the non-toleranced dimensions.
4. Numbers in ( ) are for references only.

© Renesas Electronics Corporation

REVISIONS			
DATE CREATED	REV	DESCRIPTION	AUTHOR
4/3/14	00	INITIAL RELEASE	JH
12/11/14	01	ADD PIN1 CHAMFER	JH
4/5/18	02	CHANGE QFN TO VFQFPN, RECALCULATE LAND PATTERN	RC
NOE: REFER TO DCP FOR OFFICIAL RELEASE DATE			

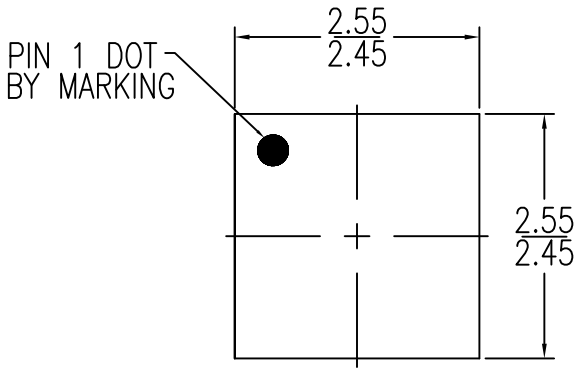

TOP VIEW

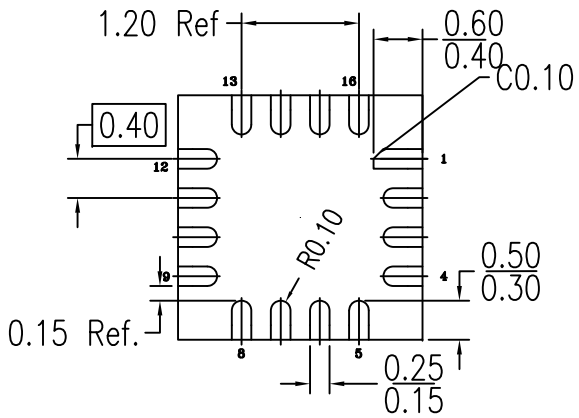

BOTTOM VIEW

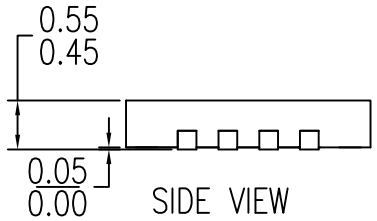

SIDE VIEW

NOTES:

1. ALL DIMENSIONING AND TOLERANCING CONFORM TO ANSI Y14.5M-1982
2. ALL DIMENSIONS ARE IN MILLIMETERS.

TOLERANCES UNLESS SPECIFIED DECIMAL X± XX± XXX± ANGULAR ±1°	IDT™ www.IDT.com	6024 Silver Creek Valley Road San Jose CA 95138 PHONE: (408) 284-8200 FAX: (408) 284-8591
DRAWN	TITLE CMG16 Package Outline Drawing 2.5 x 2.5 x 0.5 mm Body 0.40mm Pitch VFQFPN	
	SIZE C	DRAWING No. PSC-4478 / REV 02
	DO NOT SCALE DRAWING	SHEET 1 OF 2

REVISIONS			
DATE CREATED	REV	DESCRIPTION	AUTHOR
4/3/14	00	INITIAL RELEASE	JH
12/11/14	01	ADD PIN1 CHAMFER	JH
4/5/18	02	CHANGE QFN TO VFQFPN, RECALCULATE LAND PATTERN	RC
NOE: REFER TO DCP FOR OFFICIAL RELEASE DATE			

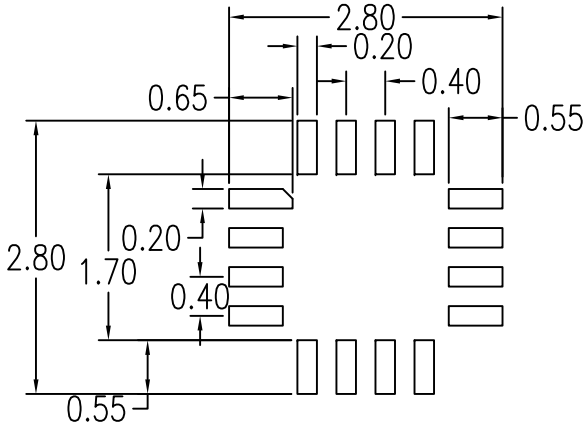

RECOMMENDED LAND PATTERN DIMENSION

NOTES:
1. ALL DIMENSIONS ARE IN MM. ANGLES IN DEGREES.
2. TOP DOWN VIEW AS VIEWED ON PCB.
3. LAND PATTERN RECOMMENDATION PER IPC-7351B GENERIC REQUIREMENT FOR SURFACE MOUNT DESIGN AND LAND PATTERN.

TOLERANCES UNLESS SPECIFIED
DECIMAL X± XX± XXX±
ANGULAR ±1°

DRAWN

IDT™
www.IDT.com
6024 Silver Creek Valley Road
San Jose CA 95138
PHONE: (408) 284-8200
FAX: (408) 284-8591

TITLE CMG16 Package Outline Drawing
2.5 x 2.5 x 0.5 mm Body
0.40mm Pitch VFQFPN

SIZE	DRAWING No.	REV
C	PSC-4478	02

DO NOT SCALE DRAWING

Package Outline Drawing

PSC-4179-02
NDG20P2
20-VFQFPN 3.0 x 3.0 x 0.9 mm Body, 0.4mm Pitch
Rev.03, May 5, 2025

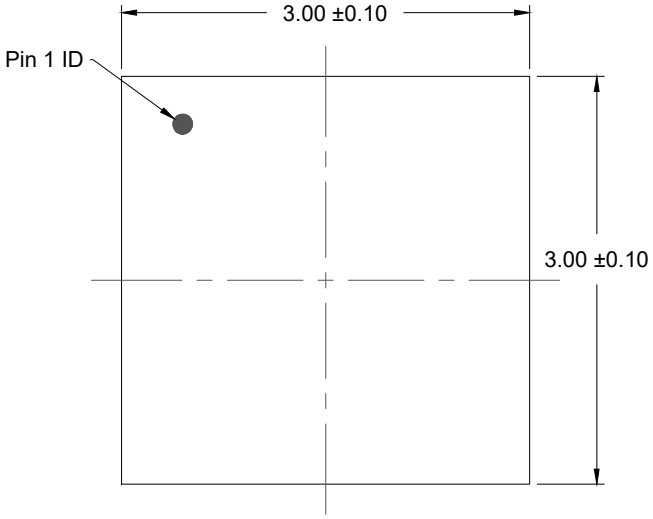

TOP VIEW

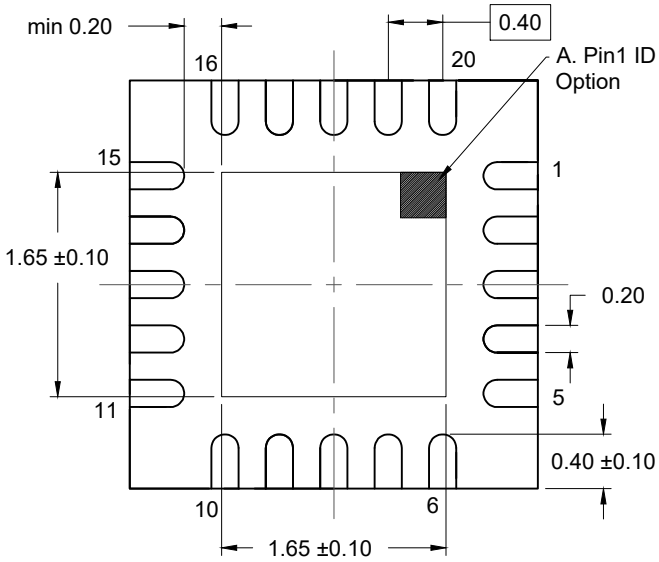

BOTTOM VIEW

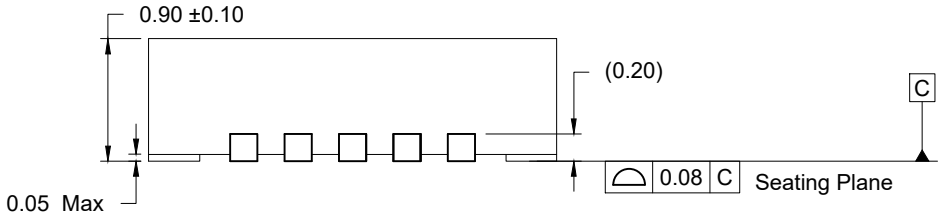

SIDE VIEW

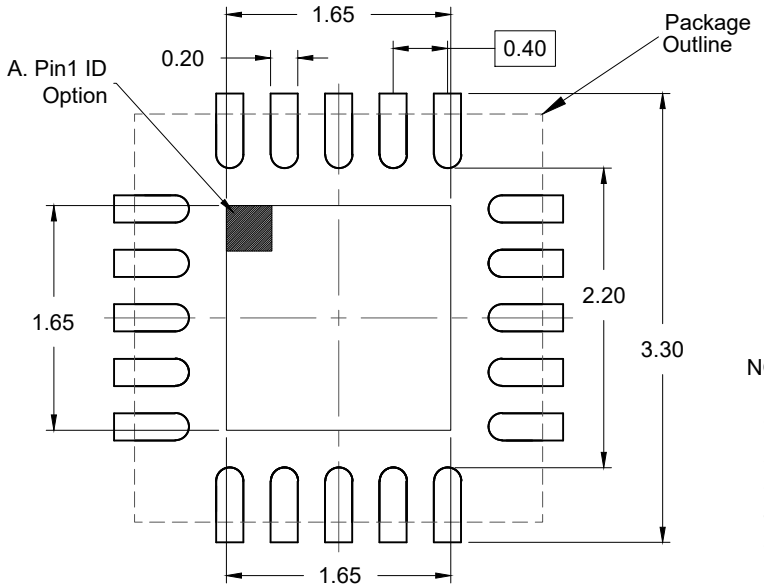

RECOMMENDED LAND PATTERN
(PCB Top View, NSMD Design)

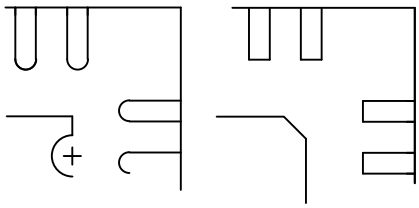

A. PIN1 ID OPTION DETAILS

NOTES:

1. JEDEC compatible.
2. All dimensions are in mm and angles are in degrees.
3. Use ±0.05 mm for the non-toleranced dimensions.
4. Numbers in ( ) are for references only.
5. Pin#1 ID is identified by either chamfer or notch.

© Renesas Electronics Corporation

DFN-8, Package Outline Drawing

2.0 x 2.0 x 0.75 mm Body, 0.50mm Pitch

CMT8D1, PSC-4778-01, Rev 00, Page 1

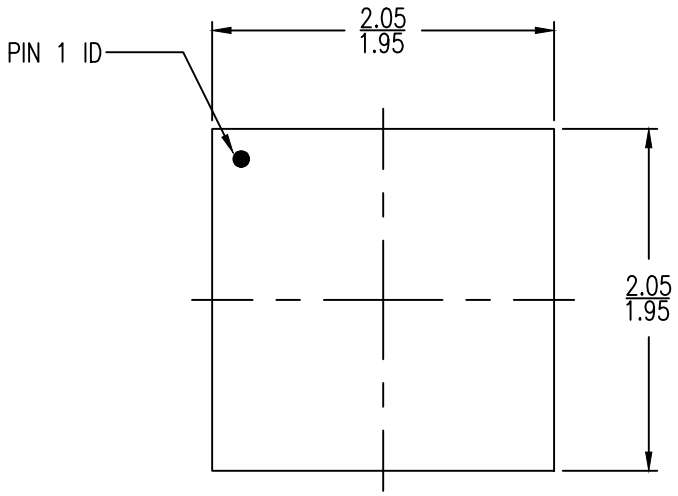

TOP VIEW

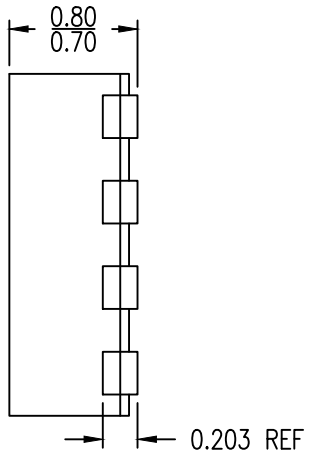

SIDE VIEW

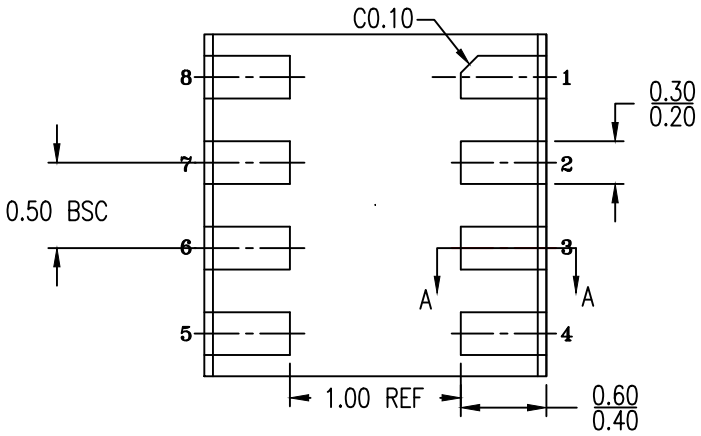

BOTTOM VIEW

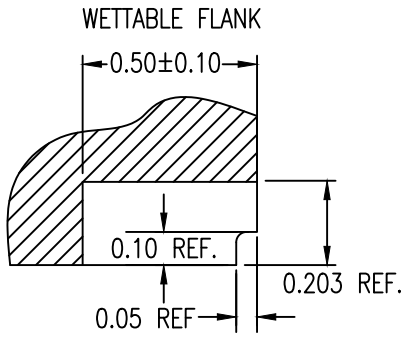

A–A CROSS SECTION

NOTES:

1. ALL DIMENSIONING AND TOLERANCING CONFORM TO ANSI Y14.5M–1982
2. ALL DIMENSIONS ARE IN MILLIMETERS

© Renesas Electronics Corporation

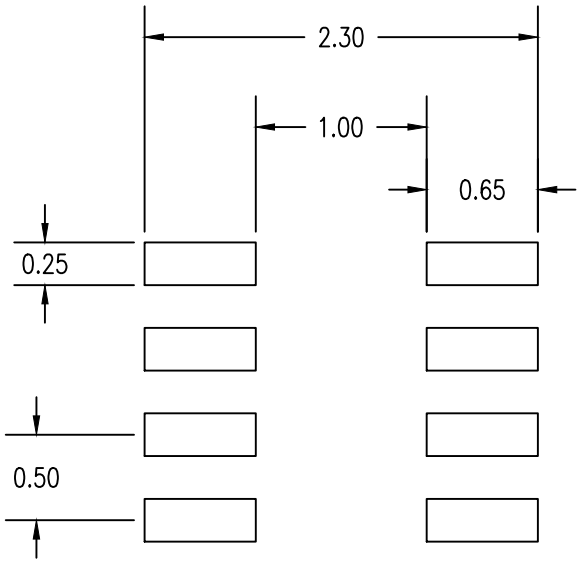

RECOMMENDED LAND PATTERN DIMENSION

NOTES:

1. ALL DIMENSION ARE IN MM. ANGLES IN DEGREES.
2. TOP DOWN VIEW. AS VIEWED.
3. LAND PATTERN RECOMMENDATION PER IPC-7351B GENERIC REQUIREMENT FOR MOUNT DESIGN AND LAND PATTERN.

Package Revision History		
Date Created	Rev No.	Description
Oct 23, 2018	Rev 00	Initial Release

© Renesas Electronics Corporation

IMPORTANT NOTICE AND DISCLAIMER

RENESAS ELECTRONICS CORPORATION AND ITS SUBSIDIARIES (“RENESAS”) PROVIDES TECHNICAL SPECIFICATIONS AND RELIABILITY DATA (INCLUDING DATASHEETS), DESIGN RESOURCES (INCLUDING REFERENCE DESIGNS), APPLICATION OR OTHER DESIGN ADVICE, WEB TOOLS, SAFETY INFORMATION, AND OTHER RESOURCES “AS IS” AND WITH ALL FAULTS, AND DISCLAIMS ALL WARRANTIES, EXPRESS OR IMPLIED, INCLUDING, WITHOUT LIMITATION, ANY IMPLIED WARRANTIES OF MERCHANTABILITY, FITNESS FOR A PARTICULAR PURPOSE, OR NON-INFRINGEMENT OF THIRD-PARTY INTELLECTUAL PROPERTY RIGHTS.

These resources are intended for developers who are designing with Renesas products. You are solely responsible for (1) selecting the appropriate products for your application, (2) designing, validating, and testing your application, and (3) ensuring your application meets applicable standards, and any other safety, security, or other requirements. These resources are subject to change without notice. Renesas grants you permission to use these resources only to develop an application that uses Renesas products. Other reproduction or use of these resources is strictly prohibited. No license is granted to any other Renesas intellectual property or to any third-party intellectual property. Renesas disclaims responsibility for, and you will fully indemnify Renesas and its representatives against, any claims, damages, costs, losses, or liabilities arising from your use of these resources. Renesas' products are provided only subject to Renesas' Terms and Conditions of Sale or other applicable terms agreed to in writing. No use of any Renesas resources expands or otherwise alters any applicable warranties or warranty disclaimers for these products.

(Disclaimer Rev.1.01)

Corporate Headquarters

TOYOSU FORESIA, 3-2-24 Toyosu,
Koto-ku, Tokyo 135-0061, Japan
www.renesas.com

Trademarks

Renesas and the Renesas logo are trademarks of Renesas Electronics Corporation. All trademarks and registered trademarks are the property of their respective owners.

Contact Information

For further information on a product, technology, the most up-to-date version of a document, or your nearest sales office, please visit www.renesas.com/contact-us/.

© 2026 Renesas Electronics Corporation. All rights reserved.