Ultra low power 48 MHz Arm® Cortex®-M23 core, up to 64-KB code flash memory, 16-KB SRAM, 12-bit A/D Converter, Safety features.

Features

■ Arm Cortex-M23 Core

- Armv8-M architecture
- Maximum operating frequency: 48 MHz
- Arm Memory Protection Unit (Arm MPU) with 8 regions
- Debug and Trace: DWT, FPB, CoreSight™ MTB-M23
- CoreSight Debug Port: SW-DP

■ Memory

- Up to 64-KB code flash memory
- 2-KB data flash memory (100,000 program/erase (P/E) cycles)
- 16-KB SRAM
- Memory protection units
- 128-bit unique ID

■ Connectivity

- Serial Communications Interface (SCI) × 4
  - Asynchronous interfaces
  - 8-bit clock synchronous interface
  - Simple IIC
  - Simple SPI
  - Smart card interface
- Serial Peripheral Interface (SPI) × 1
- I^2C bus interface (IIC) × 1

■ Analog

- 12-bit A/D Converter (ADC12)
- Temperature Sensor (TSN)

■ Timers

- General PWM Timer 32-bit (GPT32) × 1
- General PWM Timer 16-bit (GPT16) × 6
- Low Power Asynchronous General Purpose Timer (AGT) × 2
- Watchdog Timer (WDT)

■ Safety

- SRAM parity error check
- Flash area protection
- ADC self-diagnosis function
- Clock Frequency Accuracy Measurement Circuit (CAC)
- Cyclic Redundancy Check (CRC) calculator
- Data Operation Circuit (DOC)
- Port Output Enable for GPT (POEG)
- Independent Watchdog Timer (IWDT)
- GPIO readback level detection
- Register write protection
- Main oscillator stop detection
- Illegal memory access detection

■ System and Power Management

- Low power modes
- Realtime Clock (RTC)
- Event Link Controller (ELC)
- Data Transfer Controller (DTC)
- Key Interrupt Function (KINT)
- Power-on reset
- Low Voltage Detection (LVD) with voltage settings

■ Multiple Clock Sources

- Main clock oscillator (MOSC) (1 to 20 MHz)
- Sub-clock oscillator (SOSC) (32.768 kHz)
- High-speed on-chip oscillator (HOCO) (24/32/48/64 MHz)
- Middle-speed on-chip oscillator (MOCO) (8 MHz)
- Low-speed on-chip oscillator (LOCO) (32.768 kHz)
- Clock trim function for HOCO/MOCO/LOCO
- IWDT-dedicated on-chip oscillator (15 kHz)
- Clock out support

■ Up to 40 pins for general I/O ports

- 5-V tolerance, open drain, input pull-up, switchable driving ability

■ Operating Voltage

- VCC: 1.6 to 5.5 V

■ Operating Temperature and Packages

- Ta = -40°C to +85°C
  - 48-pin LQFP (7 mm × 7 mm, 0.5 mm pitch)
  - 48-pin HWQFN (7 mm × 7 mm, 0.5 mm pitch)
  - 32-pin LQFP (7 mm × 7 mm, 0.8 mm pitch)
  - 32-pin HWQFN (5 mm × 5 mm, 0.5 mm pitch)
- Ta = -40°C to +105°C
  - 48-pin LQFP (7 mm × 7 mm, 0.5 mm pitch)
  - 48-pin HWQFN (7 mm × 7 mm, 0.5 mm pitch)
  - 32-pin LQFP (7 mm × 7 mm, 0.8 mm pitch)
  - 32-pin HWQFN (5 mm × 5 mm, 0.5 mm pitch)

1. Overview

The MCU integrates multiple series of software- and pin-compatible Arm®-based 32-bit cores that share a common set of Renesas peripherals to facilitate design scalability.

The MCU in this series incorporates an energy-efficient Arm Cortex®-M23 32-bit core, that is particularly well suited for cost-sensitive and low-power applications, with the following features:

- Up to 64-KB code flash memory
- 16-KB SRAM
- 12-bit A/D Converter (ADC12)

1.1 Function Outline

Table 1.1 Arm core

Feature	Functional description
Arm Cortex-M23 core	● Maximum operating frequency: up to 48 MHz ● Arm Cortex-M23 core: – Revision: r1p0-00rel0 – Armv8-M architecture profile – Single-cycle integer multiplier – 19-cycle integer divider ● Arm Memory Protection Unit (Arm MPU): – Armv8 Protected Memory System Architecture – 8 protect regions ● SysTick timer: – Driven by SYSTICCLK (LOCO) or ICLK

Table 1.2 Memory

Feature	Functional description
Code flash memory	Maximum 64-KB of code flash memory.
Data flash memory	2-KB of data flash memory.
Option-setting memory	The option-setting memory determines the state of the MCU after a reset.
SRAM	On-chip high-speed SRAM with parity bit.

Table 1.3 System (1 of 2)

Feature	Functional description
Operating modes	Two operating modes: ● Single-chip mode ● SCI boot mode
Resets	The MCU provides 12 resets (RES pin reset, power-on reset, independent watchdog timer reset, watchdog timer reset, voltage monitor 0/1/2 resets, SRAM parity error reset, bus master/slave MPU error resets, CPU stack pointer error reset, software reset).
Low Voltage Detection (LVD)	The Low Voltage Detection (LVD) module monitors the voltage level input to the VCC pin. The detection level can be selected by register settings. The LVD module consists of three separate voltage level detectors (LVD0, LVD1, LVD2). LVD0, LVD1, and LVD2 measure the voltage level input to the VCC pin. LVD registers allow your application to configure detection of VCC changes at various voltage thresholds.
Clocks	● Main clock oscillator (MOSC) ● Sub-clock oscillator (SOSC) ● High-speed on-chip oscillator (HOCO) ● Middle-speed on-chip oscillator (MOCO) ● Low-speed on-chip oscillator (LOCO) ● IWDT-dedicated on-chip oscillator ● Clock out support

Table 1.3 System (2 of 2)

Feature	Functional description
Clock Frequency Accuracy Measurement Circuit (CAC)	The Clock Frequency Accuracy Measurement Circuit (CAC) counts pulses of the clock to be measured (measurement target clock) within the time generated by the clock selected as the measurement reference (measurement reference clock), and determines the accuracy depending on whether the number of pulses is within the allowable range. When measurement is complete or the number of pulses within the time generated by the measurement reference clock is not within the allowable range, an interrupt request is generated.
Interrupt Controller Unit (ICU)	The Interrupt Controller Unit (ICU) controls which event signals are linked to the Nested Vector Interrupt Controller (NVIC), and the Data Transfer Controller (DTC) modules. The ICU also controls non-maskable interrupts.
Key Interrupt Function (KINT)	The key interrupt function (KINT) generates the key interrupt by detecting rising or falling edge on the key interrupt input pins.
Low power modes	Power consumption can be reduced in multiple ways, including setting clock dividers, stopping modules, selecting power control mode in normal operation, and transitioning to low power modes.
Register write protection	The register write protection function protects important registers from being overwritten due to software errors. The registers to be protected are set with the Protect Register (PRCR).
Memory Protection Unit (MPU)	The MCU has four Memory Protection Units (MPUs) and a CPU stack pointer monitor function are provided.
Watchdog Timer (WDT)	The Watchdog Timer (WDT) is a 14-bit down counter that can be used to reset the MCU when the counter underflows because the system has run out of control and is unable to refresh the WDT. In addition, the WDT can be used to generate a non-maskable interrupt or an underflow interrupt or watchdog timer reset.
Independent Watchdog Timer (IWDT)	The Independent Watchdog Timer (IWDT) consists of a 14-bit down counter that must be serviced periodically to prevent counter underflow. The IWDT provides functionality to reset the MCU or to generate a non-maskable interrupt or an underflow interrupt. Because the timer operates with an independent, dedicated clock source, it is particularly useful in returning the MCU to a known state as a fail-safe mechanism when the system runs out of control. The IWDT can be triggered automatically by a reset, underflow, refresh error, or a refresh of the count value in the registers.

Table 1.4 Event link

Feature	Functional description
Event Link Controller (ELC)	The Event Link Controller (ELC) uses the event requests generated by various peripheral modules as source signals to connect them to different modules, allowing direct link between the modules without CPU intervention.

Table 1.5 Direct memory access

Feature	Functional description
Data Transfer Controller (DTC)	A Data Transfer Controller (DTC) module is provided for transferring data when activated by an interrupt request.

Table 1.6 Timers (1 of 2)

Feature	Functional description
General PWM Timer (GPT)	The General PWM Timer (GPT) is a 32-bit timer with GPT32 × 1 channel and a 16-bit timer with GPT16 × 6 channels. PWM waveforms can be generated by controlling the up-counter, down-counter, or the up- and down-counter. In addition, PWM waveforms can be generated for controlling brushless DC motors. The GPT can also be used as a general-purpose timer.
Port Output Enable for GPT (POEG)	The Port Output Enable (POEG) function can place the General PWM Timer (GPT) output pins in the output disable state
Low power Asynchronous General Purpose Timer (AGT)	The Low Power Asynchronous General Purpose Timer (AGT) is a 16-bit timer that can be used for pulse output, external pulse width or period measurement, and counting external events. This timer consists of a reload register and a down counter. The reload register and the down counter are allocated to the same address, and can be accessed with the AGT register.

Table 1.6 Timers (2 of 2)

Feature	Functional description
Realtime Clock (RTC)	The RTC has two operation modes, normal operation mode and low-consumption clock mode. In each of the operation mode, the RTC has two counting modes, calendar count mode and binary count mode, that are used by switching register settings. For calendar count mode, the RTC has a 100-year calendar from 2000 to 2099 and automatically adjusts dates for leap years. For binary count mode, the RTC counts seconds and retains the information as a serial value. Binary count mode can be used for calendars other than the Gregorian (Western) calendar.

Table 1.7 Communication interfaces

Feature	Functional description
Serial Communications Interface (SCI)	The Serial Communications Interface (SCI) × 4 channels have asynchronous and synchronous serial interfaces: ● Asynchronous interfaces (UART and Asynchronous Communications Interface Adapter (ACIA)) ● 8-bit clock synchronous interface ● Simple IIC (master-only) ● Simple SPI ● Smart card interface The smart card interface complies with the ISO/IEC 7816-3 standard for electronic signals and transmission protocol. SCIn (n = 0) has FIFO buffers to enable continuous and full-duplex communication, and the data transfer speed can be configured independently using an on-chip baud rate generator.
I^2C bus interface (IIC)	The I^2C bus interface (IIC) has 1 channel. The IIC module conforms with and provides a subset of the NXP I^2C (Inter-Integrated Circuit) bus interface functions.
Serial Peripheral Interface (SPI)	The Serial Peripheral Interface (SPI) has one channel. The SPI provides high-speed full-duplex synchronous serial communications with multiple processors and peripheral devices.

Table 1.8 Analog

Feature	Functional description
12-bit A/D Converter (ADC12)	A 12-bit successive approximation A/D converter is provided. Up to 13 analog input channels are selectable. Temperature sensor output and internal reference voltage are selectable for conversion.
Temperature Sensor (TSN)	The on-chip Temperature Sensor (TSN) determines and monitors the die temperature for reliable operation of the device. The sensor outputs a voltage directly proportional to the die temperature, and the relationship between the die temperature and the output voltage is fairly linear. The output voltage is provided to the ADC12 for conversion and can be further used by the end application.

Table 1.9 Data processing

Feature	Functional description
Cyclic Redundancy Check (CRC) calculator	The Cyclic Redundancy Check (CRC) generates CRC codes to detect errors in the data. The bit order of CRC calculation results can be switched for LSB-first or MSB-first communication. Additionally, various CRC-generation polynomials are available. The snoop function allows the CRC code to monitor access to specific addresses. This function is useful in applications that require CRC code to be generated automatically in certain events, such as monitoring writes to the serial transmit buffer and reads from the serial receive buffer.
Data Operation Circuit (DOC)	The Data Operation Circuit (DOC) compares, adds, and subtracts 16-bit data. When a selected condition applies, 16-bit data is compared and an interrupt can be generated.

Table 1.10 I/O ports

Feature	Functional description
I/O ports	● I/O ports for the 48-pin LQFP/HWQFN – I/O pins: 37 – Input pins: 3 – Pull-up resistors: 37 – N-ch open-drain outputs: 26 – 5-V tolerance: 3 ● I/O ports for the 32-pin LQFP/HWQFN – I/O pins: 23 – Input pins: 3 – Pull-up resistors: 23 – N-ch open-drain outputs: 15 – 5-V tolerance: 1

1.2 Block Diagram

Figure 1.1 shows a block diagram of the MCU superset. Some individual devices within the group have a subset of the features.

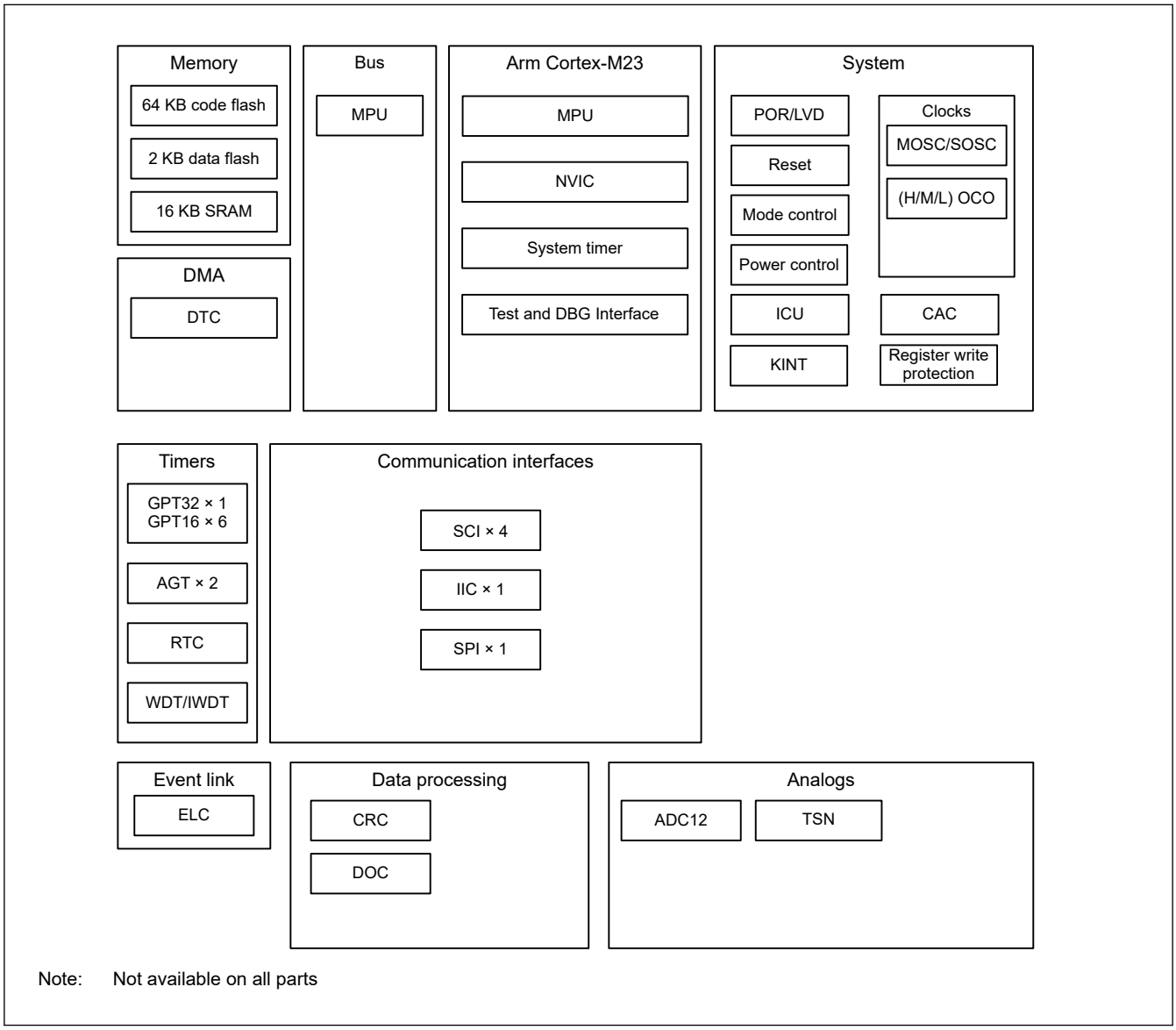

Figure 1.1 Block diagram

1.3 Part Numbering

Figure 1.2 shows the product part number information, including memory capacity and package type. Table 1.11 shows a list of products.

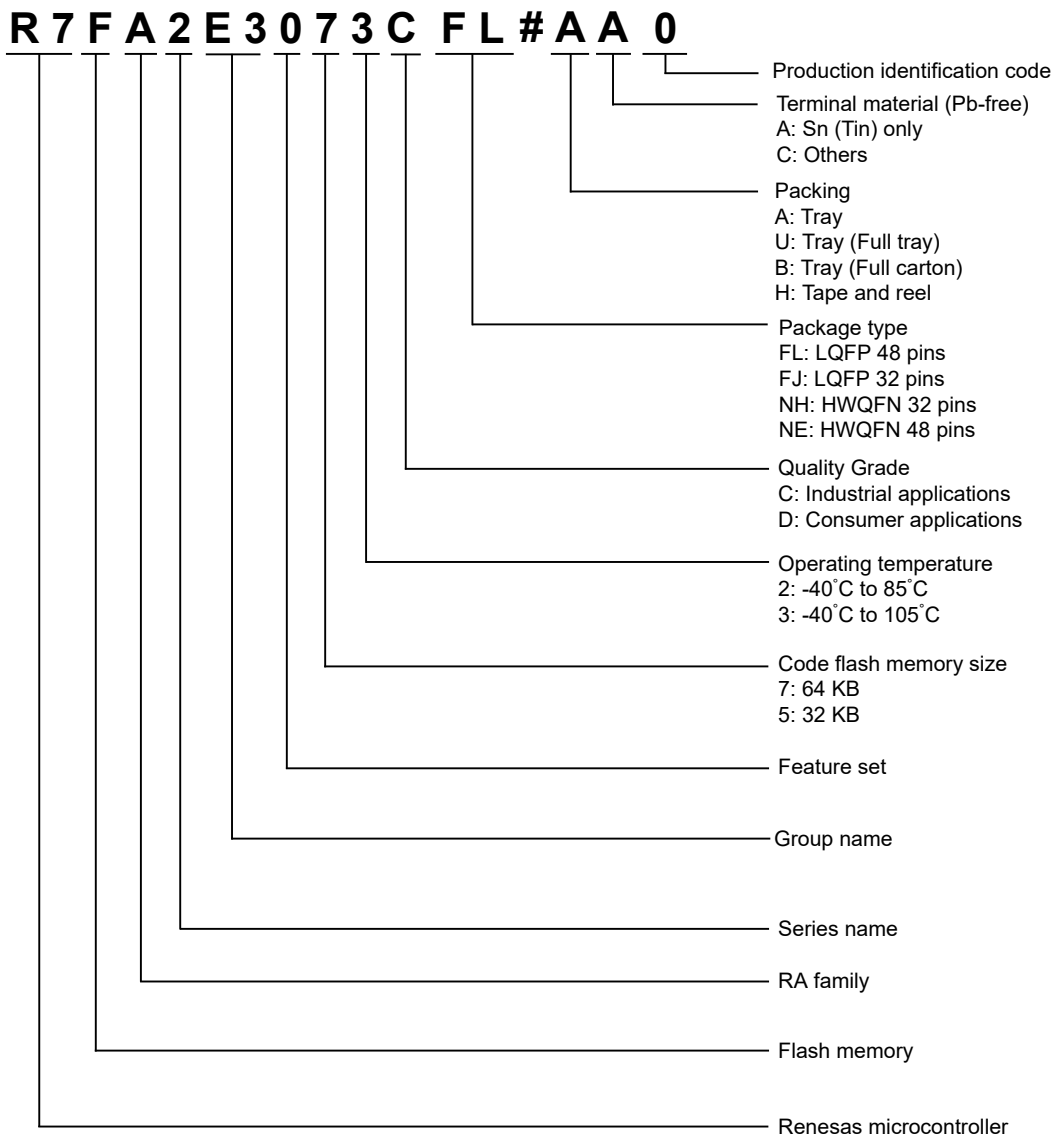

Note: Check the order screen for each product on the Renesas website for valid symbols after the #.

Figure 1.2 Part numbering scheme

Table 1.11 Product list (1 of 2)

Product part number	Package code	Code flash	Data flash	SRAM	Operating temperature
R7FA2E3073CFL	PLQP0048KB-B	64	2	16	-40 to +105°C
R7FA2E3073CFJ	PLQP0032GB-A				
R7FA2E3073CNH	PWQN0032KE-A				
R7FA2E3073CNE	PWQN0048KC-A				
R7FA2E3072DFL	PLQP0048KB-B				-40 to +85°C
R7FA2E3072DFJ	PLQP0032GB-A				
R7FA2E3072DNH	PWQN0032KE-A				
R7FA2E3072DNE	PWQN0048KC-A				

Table 1.11 Product list (2 of 2)

Product part number	Package code	Code flash	Data flash	SRAM	Operating temperature
R7FA2E3053CFL	PLQP0048KB-B	32	2	16	-40 to +105°C
R7FA2E3053CFJ	PLQP0032GB-A				
R7FA2E3053CNH	PWQN0032KE-A				
R7FA2E3053CNE	PWQN0048KC-A				
R7FA2E3052DFL	PLQP0048KB-B				-40 to +85°C
R7FA2E3052DFJ	PLQP0032GB-A				
R7FA2E3052DNH	PWQN0032KE-A				
R7FA2E3052DNE	PWQN0048KC-A				

1.4 Function Comparison

Table 1.12 Function Comparison

Parts number		R7FA2E307xxFL R7FA2E307xxNE	R7FA2E305xxFL R7FA2E305xxNE	R7FA2E307xxFJ R7FA2E307xxNH	R7FA2E305xxFJ R7FA2E305xxNH
Pin count		48		32	
Package		LQFP/HWQFN		LQFP/HWQFN	
Code flash memory		64 KB	32 KB	64 KB	32 KB
Data flash memory		2 KB		2 KB	
SRAM (Parity)		16 KB		16 KB	
System	CPU clock	48 MHz		48 MHz	
	Sub clock oscillator	Yes		Yes	
	ICU	Yes		Yes	
	KINT	5		4	
Event control	ELC	Yes		Yes	
DMA	DTC	Yes		Yes	
Timers	GPT32	1 (PWM outputs: 2)		1 (PWM outputs: 2)	
	GPT16	6 (PWM outputs: 12)		6 (PWM outputs: 7)	
	AGT	2		2	
	RTC	Yes		Yes	
	WDT/IWDT	Yes		Yes	
Communication	SCI	4		3	
	IIC	1		1	
	SPI	1		1	
Analog	ADC12	13		10	
	TSN	Yes		Yes	
Data processing	CRC	Yes		Yes	
	DOC	Yes		Yes	
I/O ports	I/O pins	37		23	
	Input pins	3		3	
	Pull-up resistors	37		23	
	N-ch open-drain outputs	26		15	
	5-V tolerance	3		1	

1.5 Pin Functions

Table 1.13 Pin functions (1 of 2)

Function	Signal	I/O	Description
Power supply	VCC	Input	Power supply pin. Connect it to the system power supply. Connect this pin to VSS by a 0.1-μF capacitor. Place the capacitor close to the pin.
	VCL	I/O	Connect this pin to the VSS pin by the smoothing capacitor used to stabilize the internal power supply. Place the capacitor close to the pin.
	VSS	Input	Ground pin. Connect it to the system power supply (0 V).
Clock	XTAL	Output	Pins for a crystal resonator. An external clock signal can be input through the EXTAL pin.
	EXTAL	Input	
	XCIN	Input	Input/output pins for the sub-clock oscillator. Connect a crystal resonator between XCOUT and XCIN.
	XCOUT	Output	
	CLKOUT	Output	Clock output pin
Operating mode control	MD	Input	Pin for setting the operating mode. The signal level on this pin must not be changed during operation mode transition on release from the reset state.
System control	RES	Input	Reset signal input pin. The MCU enters the reset state when this signal goes low.
CAC	CACREF	Input	Measurement reference clock input pin
On-chip debug	SWDIO	I/O	Serial wire debug data input/output pin
	SWCLK	Input	Serial wire clock pin
Interrupt	NMI	Input	Non-maskable interrupt request pin
	IRQ0 to IRQ7	Input	Maskable interrupt request pins
GPT	GTETRGA, GTETRGB	Input	External trigger input pins
	GTIOCnA (n = 0, 4 to 9), GTIOCnB (n = 0, 4 to 9)	I/O	Input capture, output compare, or PWM output pins
	GTOUUP	Output	3-phase PWM output for BLDC motor control (positive U phase)
	GTOULO	Output	3-phase PWM output for BLDC motor control (negative U phase)
	GTOVUP	Output	3-phase PWM output for BLDC motor control (positive V phase)
	GTOVLO	Output	3-phase PWM output for BLDC motor control (negative V phase)
	GTOWUP	Output	3-phase PWM output for BLDC motor control (positive W phase)
	GTOWLO	Output	3-phase PWM output for BLDC motor control (negative W phase)
AGT	AGTEE0, AGTEE1	Input	External event input enable signals
	AGTIO0, AGTIO1	I/O	External event input and pulse output pins
	AGTO0	Output	Pulse output pins
	AGTOA0, AGTOA1	Output	Output compare match A output pins
	AGTOB0	Output	Output compare match B output pins
RTC	RTCOUT	Output	Output pin for 1-Hz or 64-Hz clock

Table 1.13 Pin functions (2 of 2)

Function	Signal	I/O	Description
SCI	SCKn (n = 0 to 2, 9)	I/O	Input/output pins for the clock (clock synchronous mode)
	RXDn (n = 0 to 2, 9)	Input	Input pins for received data (asynchronous mode/clock synchronous mode)
	TXDn (n = 0 to 2, 9)	Output	Output pins for transmitted data (asynchronous mode/clock synchronous mode)
	CTSn_RTSn (n = 0 to 2, 9)	I/O	Input/output pins for controlling the start of transmission and reception (asynchronous mode/clock synchronous mode), active-low.
	SCLn (n = 0 to 2, 9)	I/O	Input/output pins for the IIC clock (simple IIC mode)
	SDAn (n = 0 to 2, 9)	I/O	Input/output pins for the IIC data (simple IIC mode)
	SCKn (n = 0 to 2, 9)	I/O	Input/output pins for the clock (simple SPI mode)
	MISOn (n = 0 to 2, 9)	I/O	Input/output pins for slave transmission of data (simple SPI mode)
	MOSIn (n = 0 to 2, 9)	I/O	Input/output pins for master transmission of data (simple SPI mode)
	SSn (n = 0 to 2, 9)	Input	Chip-select input pins (simple SPI mode), active-low
IIC	SCLn (n = 0)	I/O	Input/output pins for the clock
	SDAn (n = 0)	I/O	Input/output pins for data
SPI	RSPCKA	I/O	Clock input/output pin
	SSLA0	I/O	Input or output pin for slave selection
	SSLA1	Output	Output pins for slave selection
	MOSIA	I/O	Input or output pins for data output from the master
	MISOA	I/O	Input or output pins for data output from the slave
Analog power supply	AVCC0	Input	Analog power supply pin for the ADC12
	AVSS0	Input	Analog ground pin for the ADC12
	VREFH0	Input	Analog reference voltage supply pin for the ADC12. Connect this pin to AVCC0 when not using the ADC12.
	VREFL0	Input	Analog reference ground pin for the ADC12. Connect this pin to AVSS0 when not using the ADC12.
ADC12	AN000 to AN002, AN005 to AN010, AN019 to AN022	Input	Input pins for the analog signals to be processed by the A/D converter.
	ADTRG0	Input	Input pin for the external trigger signals that start the A/D conversion, active-low.
KINT	KR00 to KR04	Input	Key interrupt input pins
I/O ports	P000 to P002, P010 to P015	I/O	General-purpose input/output pins
	P100 to P104, P108 to P112	I/O	General-purpose input/output pins
	P200	Input	General-purpose input pin
	P201, P206 to P208, P212, P213	I/O	General-purpose input/output pins
	P214, P215	Input	General-purpose input pins
	P300 to P302	I/O	General-purpose input/output pins
	P400, P401, P407 to P409	I/O	General-purpose input/output pins
	P500	I/O	General-purpose input/output pins
	P913 to P915	I/O	General-purpose input/output pins

1.6 Pin Assignments

Figure 1.3 and Figure 1.4 show the pin assignments from the top view.

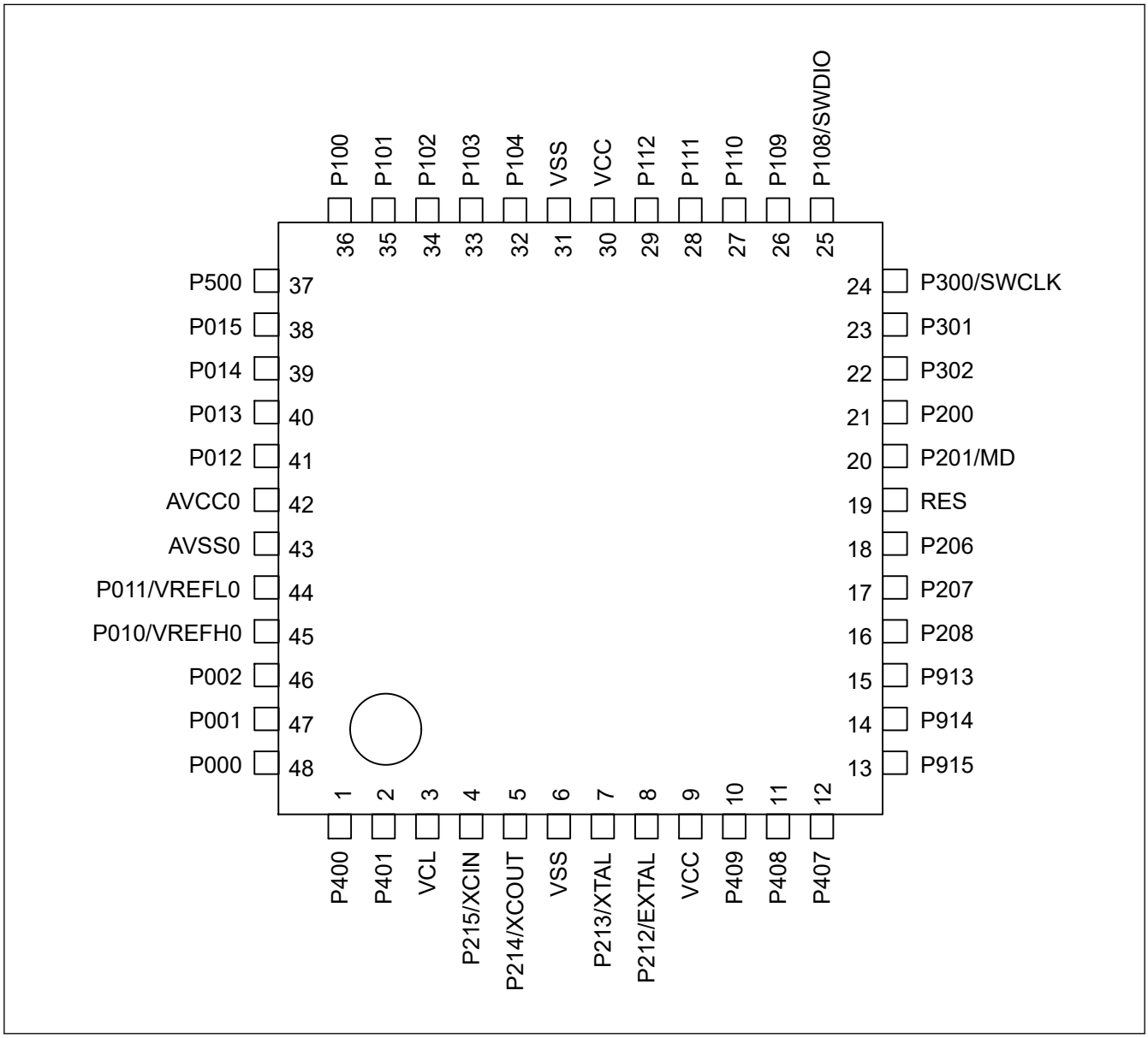

Figure 1.3 Pin assignment for LQFP/QFN 48-pin (top view)

Note: For the product in a QFN package, solder the exposed die pad onto a plated area of the PCB that has no electrical connections.

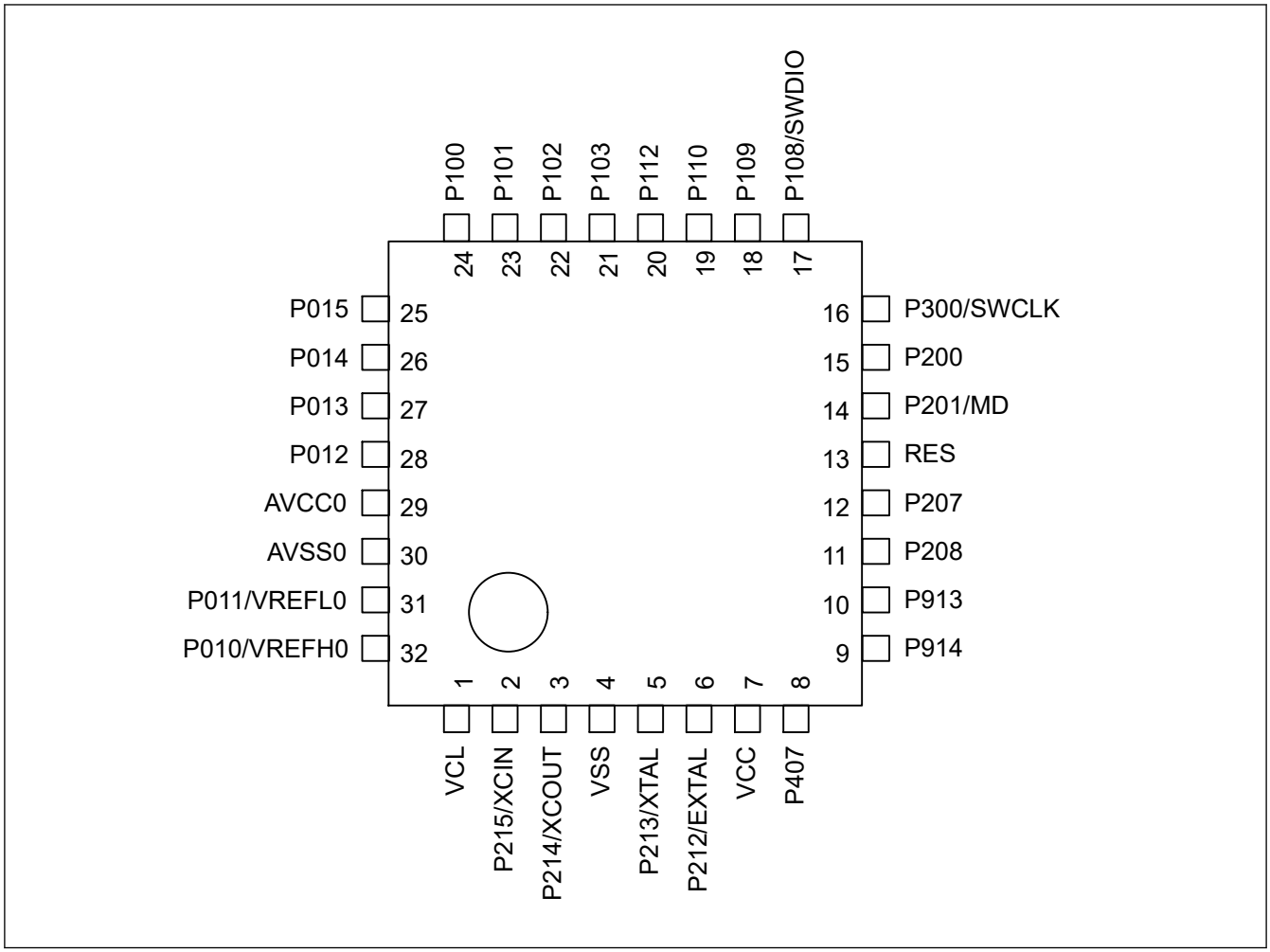

Figure 1.4 Pin assignment for LQFP/QFN 32-pin (top view)

Note: For the product in a QFN package, solder the exposed die pad onto a plated area of the PCB that has no electrical connections.

1.7 Pin Lists

Table 1.14 Pin list (1 of 2)

Pin number				Timers				Communication interfaces			Analogs	HMI
LQFP/QFN 48-pin	LQFP/QFN 32-pin	Power, System, Clock, Debug, CAC	I/O ports	AGT	GPT_OPS, POEG	GPT	RTC	SCI	IIC	SPI	ADC	Interrupt
1	—	CACREF_C	P400	AGTIO1_C	—	GTIOC9A_A	—	SCK0_B/ SCK1_B	SCL0_A	—	—	IRQ0_A
2	—		P401	—	GTETRGA_B	GTIOC9B_A	—	CTS0_RTS0_B/ SS0_B/TXD1_B/ MOSI1_B/ SDA1_B	SDA0_A	—	—	IRQ5
3	1	VCL		—	—	—	—	—	—	—	—	—
4	2	XCIN	P215	—	—	—	—	—	—	—	—	—
5	3	XCOUT	P214	—	—	—	—	—	—	—	—	—
6	4	VSS		—	—	—	—	—	—	—	—	—
7	5	XTAL	P213	—	GTETRGA_D	GTIOC0A_D	—	TXD1_A/ MOSI1_A/ SDA1_A	—	—	—	IRQ2_B
8	6	EXTAL	P212	AGTEE1	GTETRGB_D	GTIOC0B_D	—	RXD1_A/ MISO1_A/ SCL1_A	—	—	—	IRQ3_B
9	7	VCC		—	—	—	—	—	—	—	—	—
10	—		P409	—	GTOWUP_B	—	—	—	—	—	—	IRQ6_B
11	—		P408	—	GTOWLO_B	—	—	CTS1_RTS1_D/ SS1_D	SCL0_C	—	—	IRQ7_B
12	8		P407	AGTIO0_C	—	—	RTCOUT	CTS0_RTS0_D/ SS0_D	SDA0_B	—	ADTRG0_B	—
13	—		P915	—	—	—	—	—	—	—	—	—
14	9		P914	AGTOA1_A	GTETRGB_F	—	—	—	—	—	—	—
15	10		P913	AGTIO1_F	GTETRGA_F	—	—	—	—	—	—	—
16	11		P208	AGTOB0_A	—	—	—	—	—	—	—	—
17	12		P207	—	—	—	—	—	—	—	—	—
18	—		P206	—	—	—	—	RXD0_D/ MISO0_D/ SCL0_D	—	—	—	IRQ0
19	13	RES		—	—	—	—	—	—	—	—	—
20	14	MD	P201	—	—	—	—	—	—	—	—	—
21	15		P200	—	—	—	—	—	—	—	—	NMI
22	—		P302	—	GTOUUP_A	GTIOC7A_A	—	TXD2_A/ MOSI2_A/ SDA2_A	—	—	—	IRQ5_A
23	—		P301	AGTIO0_D	GTOULO_A	GTIOC7B_A	—	RXD2_A/ MISO2_A/ SCL2_A/ CTS9_RTS9_D/ SS9_D	—	—	—	IRQ6_A
24	16	SWCLK	P300	—	GTOUUP_C	GTIOC0A_A	—	—	—	—	—	—
25	17	SWDIO	P108	—	GTOULO_C	GTIOC0B_A	—	CTS9_RTS9_B/ SS9_B	—	—	—	—
26	18	CLKOUT_B	P109	—	GTOVUP_A	GTIOC4A_A	—	SCK1_E/ TXD9_B/ MOSI9_B/ SDA9_B	—	—	—	—
27	19		P110	—	GTOVLO_A	GTIOC4B_A	—	CTS2_RTS2_B/ SS2_B/RXD9_B/ MISO9_B/ SCL9_B	—	—	—	IRQ3_A
28	—		P111	AGTOA0	—	GTIOC6A_A	—	SCK2_B/ SCK9_B	—	—	—	IRQ4_A
29	20		P112	AGTOB0	—	GTIOC6B_A	—	SCK1_D/ TXD2_B/ MOSI2_B/ SDA2_B	—	—	—	—
—	—		P113	—	—	—	—	—	—	—	—	—
30	—	VCC		—	—	—	—	—	—	—	—	—
31	—	VSS		—	—	—	—	—	—	—	—	—

Table 1.14 Pin list (2 of 2)

Pin number				Timers				Communication interfaces			Analogs	HMI
LQFP/QFN 48-pin	LQFP/QFN 32-pin	Power, System, Clock, Debug, CAC	I/O ports	AGT	GPT_OPS, POEG	GPT	RTC	SCI	IIC	SPI	ADC	Interrupt
32	—		P104	—	GTETRGB_B	GTIOC4B_B	—	RXD0_C/ MISO0_C/ SCL0_C	—	SSLA1_A	—	KR04/IRQ1_B
33	21		P103	—	GTOWUP_A	GTIOC5A_A	—	CTS0_RTS0_A/ SS0_A	—	SSLA0_A	AN019	KR03
34	22		P102	AGTO0	GTOWLO_A	GTIOC5B_A	—	SCK0_A/ TXD2_D/ MOSI2_D/ SDA2_D	—	RSPCKA_A	ADTRG0_A/ AN020	KR02
35	23		P101	AGTEE0	GTETRGB_A	GTIOC8A_A	—	TXD0_A/ MOSI0_A/ SDA0_A/ CTS1_RTS1_A/ SS1_A	SDA0_C	MOSIA_A	AN021	KR01/IRQ1_A
36	24		P100	AGTIO0_A	GTETRGA_A	GTIOC8B_A	—	RXD0_A/ MISO0_A/ SCL0_A/ SCK1_A	SCL0_D	MISOA_A	AN022	KR00/IRQ2_A
37	—		P500	—	—	GTIOC5A_B	—	—	—	—	—	—
38	25		P015	—	—	—	—	—	—	—	AN010	IRQ7_A
39	26		P014	—	—	—	—	—	—	—	AN009	—
40	27		P013	—	—	—	—	—	—	—	AN008	—
41	28		P012	—	—	—	—	—	—	—	AN007	—
42	29	AVCC0		—	—	—	—	—	—	—	—	—
43	30	AVSS0		—	—	—	—	—	—	—	—	—
44	31	VREFL0	P011	—	—	—	—	—	—	—	AN006	—
45	32	VREFH0	P010	—	—	—	—	—	—	—	AN005	—
46	—		P002	—	—	—	—	—	—	—	AN002	IRQ2
47	—		P001	—	—	—	—	—	—	—	AN001	IRQ7
48	—		P000	—	—	—	—	—	—	—	AN000	IRQ6

Note: Several pin names have the added suffix of _A, _B, _C, _D, _E and _F. The suffix can be ignored when assigning functionality.

2. Electrical Characteristics

Unless otherwise specified, the electrical characteristics of the MCU are defined under the following conditions:

VCC[*1] = AVCC0 = 1.6 to 5.5 V, VREFH0 = 1.6 V to AVCC0

VSS = AVSS0 = VREFL0 = 0 V, Ta = T_{opr}

Note 1. The typical condition is set to VCC = 3.3 V.

Figure 2.1 shows the timing conditions.

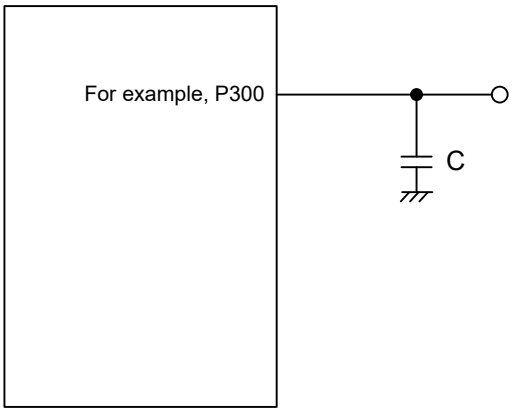

V_{OH} = VCC × 0.7, V_{OL} = VCC × 0.3
V_{IH} = VCC × 0.7, V_{IL} = VCC × 0.3
Load capacitance C = 30 pF

Figure 2.1 Input or output timing measurement conditions

The measurement conditions of the timing specifications for each peripheral are recommended for the best peripheral operation. However, make sure to adjust driving abilities for each pin to meet the conditions of your system.

Each function pin used for the same function must select the same drive ability. If the I/O drive ability of each function pin is mixed, the AC characteristics of each function are not guaranteed.

2.1 Absolute Maximum Ratings

Table 2.1 Absolute maximum ratings (1 of 2)

Parameter		Symbol	Value	Unit
Power supply voltage		VCC	-0.5 to +6.5	V
Input voltage	5V-tolerant ports[*1]	V_{in}	-0.3 to +6.5	V
	P000 to P002, P010 to P015	V_{in}	-0.3 to AVCC0 + 0.3	V
	Others	V_{in}	-0.3 to VCC + 0.3	V
Reference power supply voltage		VREFH0	-0.3 to +6.5	V
Analog power supply voltage		AVCC0	-0.5 to +6.5	V
Analog input voltage	When AN000 to AN002, AN005 to AN010 are used	V_{AN}	-0.3 to AVCC0 + 0.3	V
	When AN019 to AN022 are used		-0.3 to VCC + 0.3	V
Operating temperature[*2 *3 *4]		T_{opr}	-40 to +85 -40 to +105	°C

Table 2.1 Absolute maximum ratings (2 of 2)

Parameter	Symbol	Value	Unit
Storage temperature	T_{stg}	-55 to +125	°C

Note 1. Ports P400, P401, and P407 are 5V-tolerant.
Do not input signals or an I/O pull-up power supply while the device is not powered. The current injection that results from input of such a signal or I/O pull-up might cause malfunction and the abnormal current that passes in the device at this time might cause degradation of internal elements.
Note 2. See section 2.2.1. Tj/Ta Definition.
Note 3. Contact Renesas Electronics sales office for information on derating operation under Ta = +85°C to +105°C.
Derating is the systematic reduction of load for improved reliability.
Note 4. The upper limit of the operating temperature is 85°C or 105°C, depending on the product.

Caution: Permanent damage to the MCU may result if absolute maximum ratings are exceeded.

To preclude any malfunctions due to noise interference, insert capacitors with high frequency characteristics between the VCC and VSS pins, between the AVCC0 and AVSS0 pins, and between the VREFH0 and VREFL0 pins when VREFH0 is selected as the high potential reference voltage for the ADC12. Place capacitors of the following value as close as possible to every power supply pin and use the shortest and heaviest possible traces:

- **VCC and VSS: about 0.1 µF**
- **AVCC0 and AVSS0: about 0.1 µF**
- **VREFH0 and VREFL0: about 0.1 µF**

Also, connect capacitors as stabilization capacitance.

Connect the VCL pin to a VSS pin by a 4.7 µF capacitor. Each capacitor must be placed close to the pin.

Table 2.2 Recommended operating conditions

Parameter	Symbol		Min	Typ	Max	Unit
Power supply voltages	VCC*1 *2		1.6	—	5.5	V
	VSS		—	0	—	V
Analog power supply voltages	AVCC0*1 *2		1.6	—	5.5	V
	AVSS0		—	0	—	V
	VREFH0	When used as ADC12 Reference	1.6	—	AVCC0	V
	VREFL0		—	0	—	V

Note 1. Use AVCC0 and VCC under the following conditions:
AVCC0 = VCC
Note 2. When powering on the VCC and AVCC0 pins, power them on at the same time or the VCC pin first and then the AVCC0 pins.
When powering off the VCC and AVCC0 pins, power them off at the same time or the AVCC0 pin first and then the VCC pins.

2.2 DC Characteristics

2.2.1 Tj/Ta Definition

Table 2.3 DC characteristics

Conditions: Products with operating temperature (Ta) -40 to +105°C

Parameter	Symbol	Typ	Max	Unit	Test conditions
Permissible junction temperature	Tj	—	125	°C	High-speed mode Middle-speed mode Low-speed mode Subosc-speed mode
			105*1		

Note: Make sure that Tj = T_a + θja × total power consumption (W), where total power consumption = (VCC - V_{OH}) × ΣI_{OH} + V_{OL} × ΣI_{OL} + I_{CC}max × VCC.
Note 1. The upper limit of operating temperature is 85°C or 105°C, depending on the product. If the part number shows the operation temperature at 85°C, then the maximum value of Tj is 105°C, otherwise it is 125°C.

2.2.2 I/O V_{IH}, V_{IL}

Table 2.4 I/O V_{IH}, V_{IL}

Conditions: VCC = AVCC0 = 1.6 to 5.5 V

Parameter	Ports & Functions		Symbol	Min	Max	Unit	Test Conditions
Input voltage	Input ports pins P000 to P002, P010 to P015		V_{IH}	AVCC0 × 0.8	—	V	—
			V_{IL}	—	AVCC0 × 0.2		
	Input ports pins except for P000 to P002, P010 to P015		V_{IH}	VCC × 0.8	—		
			V_{IL}	—	VCC × 0.2		
	EXTAL		V_{IH}	VCC × 0.8	—		
			V_{IL}	—	VCC × 0.2		
	5V-tolerant ports*3		V_{IH}	VCC × 0.8	5.8		
			V_{IL}	—	VCC × 0.2		
	RES, NMI, IRQ*4		V_{IH}	VCC × 0.8	—		
			V_{IL}	—	VCC × 0.2		
			ΔV_T*6	VCC × 0.10	—		VCC = 2.7 to 5.5 V
				VCC × 0.05	—		VCC = 1.6 to 2.7 V
	Peripheral functions*5	IIC (except for SMBus)*1	V_{IH}	VCC × 0.7	5.8		—
			V_{IL}	—	VCC × 0.3		
			ΔV_T*6	VCC × 0.10	—		VCC = 2.7 to 5.5 V
				VCC × 0.05	—		VCC = 1.6 to 2.7 V
		IIC (SMBus)*2	V_{IH}	2.2	—		VCC = 3.6 to 5.5 V
			V_{IL}	2.0	—		VCC = 2.7 to 3.6 V
			V_{IL}	—	0.8		VCC = 3.6 to 5.5 V
			V_{IL}	—	0.5		VCC = 2.7 to 3.6 V
		Other peripheral functions	V_{IH}	VCC × 0.8	—		—
			V_{IL}	—	VCC × 0.2		
			ΔV_T*6	VCC × 0.10	—		VCC = 2.7 to 5.5 V
				VCC × 0.05	—		VCC = 1.6 to 2.7 V

Note 1. SCL0_A, SDA0_A, SDA0_B (total 3 pins)
Note 2. SCL0_A, SCL0_C, SDA0_A, SDA0_B, SCL0_D, SDA0_C (total 6 pins)
Note 3. P400, P401, P407 (total 3 pins)
Note 4. PmnPFS.ISEL = 1.
Note 5. PmnPFS.PMR = 1.
Note 6. This is the hysteresis characteristic of the Schmitt Trigger circuit.

2.2.3 I/O I_{OH}, I_{OL}

Table 2.5 I/O I_{OH}, I_{OL} (1 of 3)

Conditions: VCC = AVCC0 = 1.6 to 5.5 V

Parameter		Symbol	Min	Typ	Max	Unit	Test conditions
Permissible output current (max value per pin)	Ports P000 to P002, P010 to P015, P212, P213, P400, P401, P407	I_{OH}	—	—	-4.0	mA	
		I_{OL}	—	—	8.0	mA	
	Other output pins*1	I_{OH}	—	—	-4.0	mA	
		I_{OL}	—	—	20.0	mA	

Table 2.5 I/O I_{OH}, I_{OL} (2 of 3)

Conditions: VCC = AVCC0 = 1.6 to 5.5 V

Parameter			Symbol	Min	Typ	Max	Unit	Test conditions
Permissible output current (max value total pins)*2	48 pin products	Total of ports P000 to P002, P010 to P015	$\Sigma I_{OH\ (max)}$	—	—	-30	mA	AVCC0 = 2.7 to 5.5 V
				—	—	-8		AVCC0 = 1.8 to 2.7 V
				—	—	-4		AVCC0 = 1.6 to 1.8 V
			$\Sigma I_{OL\ (max)}$	—	—	50		AVCC0 = 2.7 to 5.5 V
				—	—	4		AVCC0 = 1.8 to 2.7 V
				—	—	2		AVCC0 = 1.6 to 1.8 V
		Total of ports P212, P213	$\Sigma I_{OH\ (max)}$	—	—	-8	mA	VCC = 2.7 to 5.5 V
				—	—	-2		VCC = 1.8 to 2.7 V
				—	—	-1		VCC = 1.6 to 1.8 V
			$\Sigma I_{OL\ (max)}$	—	—	16.0		VCC = 2.7 to 5.5 V
				—	—	1.2		VCC = 1.8 to 2.7 V
				—	—	0.6		VCC = 1.6 to 1.8 V
		Total of ports P206 to P208, P400, P401, P407 to P409, P913 to P915	$\Sigma I_{OH\ (max)}$	—	—	-30	mA	VCC = 2.7 to 5.5 V
				—	—	-8		VCC = 1.8 to 2.7 V
				—	—	-4		VCC = 1.6 to 1.8 V
			$\Sigma I_{OL\ (max)}$	—	—	50		VCC = 2.7 to 5.5 V
				—	—	4		VCC = 1.8 to 2.7 V
				—	—	2		VCC = 1.6 to 1.8 V
		Total of ports P100 to P104, P108 to P112, P201, P300 to P302, P500	$\Sigma I_{OH\ (max)}$	—	—	-30	mA	VCC = 2.7 to 5.5 V
				—	—	-8		VCC = 1.8 to 2.7 V
				—	—	-4		VCC = 1.6 to 1.8 V
			$\Sigma I_{OL\ (max)}$	—	—	50		VCC = 2.7 to 5.5 V
				—	—	4		VCC = 1.8 to 2.7 V
				—	—	2		VCC = 1.6 to 1.8 V
		Total of all output pin	$\Sigma I_{OH\ (max)}$	—	—	-60	mA	—
			$\Sigma I_{OL\ (max)}$	—	—	100		—

Table 2.5 I/O I_{OH}, I_{OL} (3 of 3)

Conditions: VCC = AVCC0 = 1.6 to 5.5 V

Parameter			Symbol	Min	Typ	Max	Unit	Test conditions
Permissible output current (max value total pins)*2	32 pin products	Total of ports P010 to P015	$\Sigma I_{OH\ (max)}$	—	—	-24	mA	AVCC0 = 2.7 to 5.5 V
				—	—	-6		AVCC0 = 1.8 to 2.7 V
				—	—	-3		AVCC0 = 1.6 to 1.8 V
			$\Sigma I_{OL\ (max)}$	—	—	48		AVCC0 = 2.7 to 5.5 V
				—	—	3.6		AVCC0 = 1.8 to 2.7 V
				—	—	1.8		AVCC0 = 1.6 to 1.8 V
		Total of ports P212, P213	$\Sigma I_{OH\ (max)}$	—	—	-8	mA	VCC = 2.7 to 5.5 V
				—	—	-2		VCC = 1.8 to 2.7 V
				—	—	-1		VCC = 1.6 to 1.8 V
			$\Sigma I_{OL\ (max)}$	—	—	16.0		VCC = 2.7 to 5.5 V
				—	—	1.2		VCC = 1.8 to 2.7 V
				—	—	0.6		VCC = 1.6 to 1.8 V
		Total of other output ports	$\Sigma I_{OH\ (max)}$	—	—	-30	mA	VCC = 4.0 to 5.5 V
				—	—	-20		VCC = 2.7 to 4.0 V
				—	—	-12		VCC = 1.8 to 2.7 V
				—	—	-6		VCC = 1.6 to 1.8 V
			$\Sigma I_{OL\ (max)}$	—	—	50		VCC = 4.0 to 5.5 V
				—	—	20		VCC = 2.7 to 4.0 V
				—	—	8		VCC = 1.8 to 2.7 V
				—	—	4		VCC = 1.6 to 1.8 V
		Total of all output pin	$\Sigma I_{OH\ (max)}$	—	—	-54	mA	—
			$\Sigma I_{OL\ (max)}$	—	—	98		—

Note 1. Except for Ports P200, P214, and P215, which are input ports.
Note 2. Specification under conditions where the duty factor ≤ 70%.
The output current value that has changed to the duty factor > 70% the duty ratio can be calculated with the following expression (when changing the duty factor from 70% to n%).
Total output current of pins = $(I_{OH} \times 0.7)/(n \times 0.01)$
<Example> Where n = 80% and I_{OH} = −30.0 mA
Total output current of pins = (−30.0 × 0.7)/(80 × 0.01) ≅ −26.2 mA
However, the current that is allowed to flow into one pin does not vary depending on the duty factor.

Caution: To protect the reliability of the MCU, the output current values should not exceed the values in Table 2.5.

2.2.4 I/O V_{OH}, V_{OL}, and Other Characteristics

Table 2.6 I/O V_{OH}, V_{OL} (1)

Conditions: VCC = AVCC0 = 4.0 to 5.5 V

Parameter		Symbol	Min	Typ	Max	Unit	Test conditions
Output voltage	Ports P000 to P002, P010 to P015	V_{OH}	AVCC0 - 0.8	—	—	V	I_{OH} = -4.0 mA
	Output pins except for P000 to P002 and P010 to P015*1	V_{OH}	VCC - 0.8	—	—		I_{OH} = -4.0 mA
	Ports P000 to P002, P010 to P015	V_{OL}	—	—	0.8		I_{OL} = 8.0 mA
	Ports P212, P213, P400, P401, P407	V_{OL}	—	—	0.8		I_{OL} = 8.0 mA
	Output pins except for P000 to P002, P010 to P015, P212, P213, P400, P401, and P407*1	V_{OL}	—	—	1.2		I_{OL} = 20.0 mA

Note 1. Except for Ports P200, P214, and P215, which are input ports.

Table 2.7 I/O V_{OH}, V_{OL} (2)

Conditions: VCC = AVCC0 = 2.7 to 4.0 V

Parameter		Symbol	Min	Typ	Max	Unit	Test conditions
Output voltage	Ports P000 to P002, P010 to P015	V_{OH}	AVCC0 - 0.8	—	—	V	I_{OH} = -4.0 mA
	Output pins except for P000 to P002 and P010 to P015*1	V_{OH}	VCC - 0.8	—	—		I_{OH} = -4.0 mA
	Ports P000 to P002, P010 to P015	V_{OL}	—	—	0.8		I_{OL} = 8.0 mA
	Output pins except for P000 to P002 and P010 to P015*1	V_{OL}	—	—	0.8		I_{OL} = 8.0 mA

Note 1. Except for Ports P200, P214, and P215, which are input ports.

Table 2.8 I/O V_{OH}, V_{OL} (3)

Conditions: VCC = AVCC0 = 1.6 to 2.7 V

Parameter		Symbol	Min	Typ	Max	Unit	Test conditions
Output voltage	Ports P000 to P002, P010 to P015	V_{OH}	AVCC0 - 0.5	—	—	V	I_{OH} = -1.0 mA AVCC0 = 1.8 to 2.7 V
			AVCC0 - 0.5	—	—		I_{OH} = -0.5 mA AVCC0 = 1.6 to 1.8 V
	Output pins except for P000 to P002 and P010 to P015*1	V_{OH}	VCC - 0.5	—	—		I_{OH} = -1.0 mA VCC = 1.8 to 2.7 V
			VCC - 0.5	—	—		I_{OH} = -0.5 mA VCC = 1.6 to 1.8 V
	Ports P000 to P002, P010 to P015	V_{OL}	—	—	0.4		I_{OL} = 0.6 mA AVCC0 = 1.8 to 2.7 V
			—	—	0.4		I_{OL} = 0.3 mA AVCC0 = 1.6 to 1.8 V
	Output pins except for P000 to P002 and P010 to P015*1	V_{OL}	—	—	0.4		I_{OL} = 0.6 mA VCC = 1.8 to 2.7 V
			—	—	0.4		I_{OL} = 0.3 mA VCC = 1.6 to 1.8 V

Note 1. Except for Ports P200, P214, and P215, which are input ports.

Table 2.9 I/O other characteristics

Conditions: VCC = AVCC0 = 1.6 to 5.5 V

Parameter		Symbol	Min	Typ	Max	Unit	Test conditions
Input leakage current	RES, ports P200, P214, P215	$\lvert I_{in} \rvert$	—	—	1.0	μA	V_{in} = 0 V V_{in} = VCC
Three-state leakage current (off state)	5V-tolerant ports*1	$\lvert I_{TSI} \rvert$	—	—	1.0	μA	V_{in} = 0 V V_{in} = 5.8 V
	Other ports (except for P200, P214, P215, and 5V-tolerant ports)		—	—	1.0		V_{in} = 0 V V_{in} = VCC
Input pull-up resistor	All ports (except for P200, P214, P215)	R_U	10	20	100	kΩ	V_{in} = 0 V
Input capacitance	P200	C_{in}	—	—	30	pF	V_{in} = 0 V f = 1 MHz T_a = 25°C
	Other input pins		—	—	15		

Note 1. P400, P401, and P407 (total 3 pins)

2.2.5 Operating and Standby Current

Table 2.10 Operating and standby current (1) (1 of 2)

Conditions: VCC = AVCC0 = 1.6 to 5.5 V

Parameter					Symbol	Typ*10	Max	Unit	Test Conditions
Supply current*1	High-speed mode*2	Normal mode	All peripheral clocks disabled, CoreMark code executing from flash*5	ICLK = 48 MHz	I_{CC}	4.80	—	mA	*7 *11
				ICLK = 32 MHz		3.45	—		*7
				ICLK = 16 MHz		2.05	—		
				ICLK = 8 MHz		1.40	—		
			All peripheral clocks enabled, code executing from flash*5	ICLK = 48 MHz		—	12.0		*9 *11
		Sleep mode	All peripheral clocks disabled*5	ICLK = 48 MHz		1.05	—		*7
				ICLK = 32 MHz		0.85	—		*7
				ICLK = 16 MHz		0.70	—		
				ICLK = 8 MHz		0.60	—		
			All peripheral clocks enabled*5	ICLK = 48 MHz		4.15	—		*9
				ICLK = 32 MHz		3.95	—		*8
				ICLK = 16 MHz		2.25	—		
				ICLK = 8 MHz		1.35	—		
		Increase during BGO operation*6				2.1	—		—

Table 2.10 Operating and standby current (1) (2 of 2)

Conditions: VCC = AVCC0 = 1.6 to 5.5 V

Parameter					Symbol	Typ*10	Max	Unit	Test Conditions
Supply current*1	Middle-speed mode*2	Normal mode	All peripheral clocks disabled, CoreMark code executing from flash*5	ICLK = 24 MHz	I_{CC}	2.60	—	mA	*7
				ICLK = 4 MHz		0.90	—		
			All peripheral clocks enabled, code executing from flash*5	ICLK = 24 MHz		—	8.1		*8
		Sleep mode	All peripheral clocks disabled*5	ICLK = 24 MHz		0.70	—		*7
				ICLK = 4 MHz		0.55	—		
			All peripheral clocks enabled*5	ICLK = 24 MHz		3.05	—		*8
				ICLK = 4 MHz		0.90	—		
		Increase during BGO operation*6				1.90	—		—
	Low-speed mode*3	Normal mode	All peripheral clocks disabled, CoreMark code executing from flash*5	ICLK = 2 MHz		0.30	—	mA	*7
			All peripheral clocks enabled, code executing from flash*5	ICLK = 2 MHz		—	2.2		*8
		Sleep mode	All peripheral clocks disabled*5	ICLK = 2 MHz		0.13	—		*7
			All peripheral clocks enabled*5	ICLK = 2 MHz		0.31	—		*8
	Subosc-speed mode*4	Normal mode	All peripheral clocks enabled, code executing from flash*5	ICLK = 32.768 kHz		—	150	μA	*8
		Sleep mode	All peripheral clocks disabled*5	ICLK = 32.768 kHz		1.90	—		*8
			All peripheral clocks enabled*5	ICLK = 32.768 kHz		4.90	—		*8

Note 1. Supply current is the total current flowing into VCC. Supply current values apply when internal pull-up MOSs are in the off state and these values do not include output charge/discharge current from any of the pins.
Note 2. The clock source is HOCO.
Note 3. The clock source is MOCO.
Note 4. The clock source is the sub-clock oscillator.
Note 5. This does not include BGO operation.
Note 6. This is the increase for programming or erasure of the flash memory for data storage during program execution.
Note 7. PCLKB and PCLKD are set to divided by 64.
Note 8. PCLKB and PCLKD are the same frequency as that of ICLK.
Note 9. PCLKB are set to be divided by 2 and PCLKD is the same frequency as that of ICLK.
Note 10. VCC = 3.3 V.
Note 11. The prefetch buffer is operating.

Table 2.11 Operating and standby current (2)

Conditions: VCC = AVCC0 = 1.6 to 5.5 V

Parameter					Symbol	Typ*3	Max	Unit	Test conditions
Supply current*1	Software Standby mode*2	Peripheral modules stop	All SRAMs (0x2000_4000 to 0x2000_7FFF) are on	T_a = 25°C	I_{CC}	0.25	1.3	μA	—
				T_a = 55°C		0.55	3.7		
				T_a = 85°C		1.95	12		
				T_a = 105°C		3.90	42		
			Only 8KB SRAM (0x2000_4000 to 0x2000_5FFF) is on	T_a = 25°C		0.25	1.3		
				T_a = 55°C		0.55	3.7		
				T_a = 85°C		1.70	12		
				T_a = 105°C		3.55	42		
		Increment for RTC operation with low-speed on-chip oscillator*4				0.30	—		—
		Increment for RTC operation in normal operation mode with sub-clock oscillator*4				0.20	—		SOMCR.SODRV[1:0] are 11b (Low power mode 3) RCR4.ROPSEL is 0 (RTC operation in normal operation mode)
						0.95	—		SOMCR.SODRV[1:0] are 00b (normal mode) RCR4.ROPSEL is 0 (RTC operation in normal operation mode)
		Increment for RTC operation in low-consumption clock mode with sub-clock oscillator*4				0.11	—		SOMCR.SODRV[1:0] are 11b (Low power mode 3) RCR4.ROPSEL is 1 (RTC operation in low-consumption clock mode)
						0.90	—		SOMCR.SODRV[1:0] are 00b (normal mode) RCR4.ROPSEL is 1 (RTC operation in low-consumption clock mode)

Note 1. Supply current is the total current flowing into VCC. Supply current values apply when internal pull-up MOSs are in the off state and these values do not include output charge/discharge current from any of the pins.
Note 2. The IWDT and LVD are not operating.
Note 3. VCC = 3.3 V.
Note 4. Includes the low-speed on-chip oscillator or sub-oscillation circuit current.

Table 2.12 Operating and standby current (3)

Conditions: VCC = AVCC0 = 1.6 to 5.5 V

Parameter		Symbol	Min	Typ	Max	Unit	Test conditions
Analog power supply current	During 12-bit A/D conversion (at high-speed A/D conversion mode)	I_{AVCC0}	—	—	1.44	mA	—
	During 12-bit A/D conversion (at low-power A/D conversion mode)		—	—	0.78	mA	—
	Waiting for 12-bit A/D conversion (all units)*1		—	—	1.0	μA	—
Reference power supply current	During 12-bit A/D conversion	I_{REFH0}	—	—	120	μA	—
	Waiting for 12-bit A/D conversion		—	—	60	nA	—
Temperature Sensor (TSN) operating current		I_{TNS}	—	95	—	μA	—

Note 1. When the MCU is in Software Standby mode or the MSTPCRD.MSTPD16 (ADC120 module-stop bit) is in the module-stop state.

2.2.6 VCC Rise and Fall Gradient and Ripple Frequency

Table 2.13 Rise and fall gradient characteristics

Conditions: VCC = AVCC0 = 0 to 5.5 V

Parameter		Symbol	Min	Typ	Max	Unit	Test conditions
Power-on VCC rising gradient	Voltage monitor 0 reset disabled at startup	SrVCC	0.02	—	2	ms/V	—
	Voltage monitor 0 reset enabled at startup*1 *2				—		
	SCI boot mode*2				2		

Note 1. When OFS1.LVDAS = 0.
Note 2. At boot mode, the reset from voltage monitor 0 is disabled regardless of the value of OFS1.LVDAS bit.

Table 2.14 Rising and falling gradient and ripple frequency characteristics

Conditions: VCC = AVCC0 = 1.6 to 5.5 V
The ripple voltage must meet the allowable ripple frequency $f_{r(VCC)}$ within the range between the VCC upper limit (5.5 V) and lower limit (1.6 V).
When the VCC change exceeds VCC ± 10%, the allowable voltage change rising and falling gradient dt/dVCC must be met.

Parameter	Symbol	Min	Typ	Max	Unit	Test conditions
Allowable ripple frequency	$f_{r(VCC)}$	—	—	10	kHz	Figure 2.2 $V_{r\ (VCC)} \leq$ VCC × 0.2
		—	—	1	MHz	Figure 2.2 $V_{r\ (VCC)} \leq$ VCC × 0.08
		—	—	10	MHz	Figure 2.2 $V_{r\ (VCC)} \leq$ VCC × 0.06
Allowable voltage change rising and falling gradient	dt/dVCC	1.0	—	—	ms/V	When VCC change exceeds VCC ± 10%

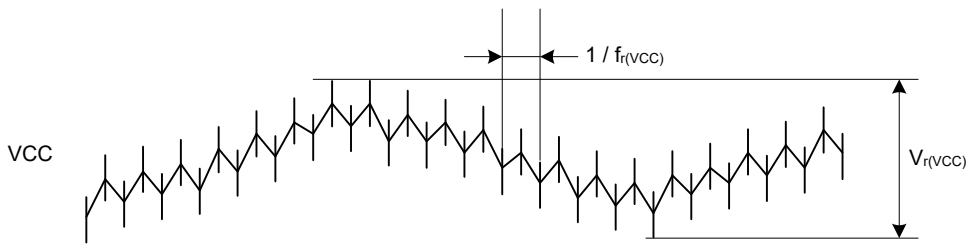

Figure 2.2 Ripple waveform

2.2.7 Thermal Characteristics

Maximum value of junction temperature (Tj) must not exceed the value of section 2.2.1. Tj/Ta Definition.

Tj is calculated by either of the following equations.

- Tj = Ta + θja × Total power consumption
- Tj = Tt + Ψjt × Total power consumption

  Tj : Junction temperature (°C)

  Ta : Ambient temperature (°C)

  Tt : Top center case temperature (°C)

  θja : Thermal resistance of “Junction”-to-“Ambient” (°C/W)

  Ψjt : Thermal resistance of “Junction”-to-“Top center case” (°C/W)

- Total power consumption = Voltage × (Leakage current + Dynamic current)
- Leakage current of IO = Σ (IOL × VOL) / Voltage + Σ (|IOH| × |VCC – VOH|) / Voltage
- Dynamic current of IO = Σ IO (Cin + Cload) × IO switching frequency × Voltage

  Cin: Input capacitance

  Cload: Output capacitance

Regarding θja and Ψjt, see Table 2.15.

Table 2.15 Thermal resistance

Parameter	Package	Symbol	Value*1	Unit	Test conditions
Thermal resistance	32-pin HWQFN	θja	22.6	°C/W	JESD 51-2 and 51-7 compliant
	48-pin HWQFN		19.0		
	32-pin LQFP		62.9		
	48-pin LQFP		63.2		
	32-pin HWQFN	Ψjt	0.23		
	48-pin HWQFN		0.21		
	32-pin LQFP		5.51		
	48-pin LQFP		5.23		

Note 1. The values are reference values when the 4-layer board is used. Thermal resistance depends on the number of layers or size of the board. For details, see the JEDEC standards.

2.3 AC Characteristics

2.3.1 Frequency

Table 2.16 Operation frequency in high-speed operating mode

Conditions: VCC = AVCC0 = 1.8 to 5.5 V

Parameter			Symbol	Min	Typ	Max*4	Unit
Operation frequency	System clock (ICLK)*1*2	1.8 to 5.5 V	f	0.032768	—	48	MHz
	Peripheral module clock (PCLKB)	1.8 to 5.5 V		—	—	32	
	Peripheral module clock (PCLKD)*3	1.8 to 5.5 V		—	—	64	

Note 1. The lower-limit frequency of ICLK is 1 MHz while programming or erasing the flash memory. When using ICLK for programming or erasing the flash memory at below 4 MHz, the frequency can be set to 1 MHz, 2 MHz, or 3 MHz. A non-integer frequency such as 1.5 MHz cannot be set.

Note 2. The frequency accuracy of ICLK must be ± 1.0% during programming or erasing the flash memory. Confirm the frequency accuracy of the clock source.

Note 3. The lower-limit frequency of PCLKD is 1 MHz when the ADC12 is in use.

Note 4. The maximum value of operation frequency does not include internal oscillator errors. For details on the range for guaranteed operation, see Table 2.20.

Table 2.17 Operation frequency in middle-speed mode

Conditions: VCC = AVCC0 = 1.6 to 5.5 V

Parameter			Symbol	Min	Typ	Max*4	Unit
Operation frequency	System clock (ICLK)*1*2	1.8 to 5.5 V	f	0.032768	—	24	MHz
		1.6 to 1.8 V		0.032768	—	4	
	Peripheral module clock (PCLKB)	1.8 to 5.5 V		—	—	24	
		1.6 to 1.8 V		—	—	4	
	Peripheral module clock (PCLKD)*3	1.8 to 5.5 V		—	—	24	
		1.6 to 1.8 V		—	—	4	

Note 1. The lower-limit frequency of ICLK is 1 MHz while programming or erasing the flash memory. When using ICLK for programming or erasing the flash memory at below 4 MHz, the frequency can be set to 1 MHz, 2 MHz, or 3 MHz. A non-integer frequency such as 1.5 MHz cannot be set.
Note 2. The frequency accuracy of ICLK must be ± 1.0% while programming or erasing the flash memory. Confirm the frequency accuracy of the clock source.
Note 3. The lower-limit frequency of PCLKD is 1 MHz when the ADC12 is in use.
Note 4. The maximum value of operation frequency does not include internal oscillator errors. For details on the range for guaranteed operation, see Table 2.20.

Table 2.18 Operation frequency in low-speed mode

Conditions: VCC = AVCC0 = 1.6 to 5.5 V

Parameter			Symbol	Min	Typ	Max*4	Unit
Operation frequency	System clock (ICLK)*1*2	1.6 to 5.5 V	f	0.032768	—	2	MHz
	Peripheral module clock (PCLKB)	1.6 to 5.5 V		—	—	2	
	Peripheral module clock (PCLKD)*3	1.6 to 5.5 V		—	—	2	

Note 1. The lower-limit frequency of ICLK is 1 MHz while programming or erasing the flash memory.
Note 2. The frequency accuracy of ICLK must be ± 1.0% while programming or erasing the flash memory. Confirm the frequency accuracy of the clock source.
Note 3. The lower-limit frequency of PCLKD is 1 MHz when the ADC12 is in use.
Note 4. The maximum value of operation frequency does not include internal oscillator errors. For details on the range for guaranteed operation, see Table 2.20.

Table 2.19 Operation frequency in Subosc-speed mode

Conditions: VCC = AVCC0 = 1.6 to 5.5 V

Parameter			Symbol	Min	Typ	Max	Unit
Operation frequency	System clock (ICLK)*1	1.6 to 5.5 V	f	27.8528	32.768	37.6832	kHz
	Peripheral module clock (PCLKB)	1.6 to 5.5 V		—	—	37.6832	
	Peripheral module clock (PCLKD)*2	1.6 to 5.5 V		—	—	37.6832	

Note 1. Programming and erasing the flash memory is not possible.
Note 2. The ADC12 cannot be used.

2.3.2 Clock Timing

Table 2.20 Clock timing (1 of 2)

Parameter	Symbol	Min	Typ	Max	Unit	Test conditions
EXTAL external clock input cycle time	t_{Xcyc}	50	—	—	ns	Figure 2.3
EXTAL external clock input high pulse width	t_{XH}	20	—	—	ns	
EXTAL external clock input low pulse width	t_{XL}	20	—	—	ns	
EXTAL external clock rising time	t_{Xr}	—	—	5	ns	
EXTAL external clock falling time	t_{Xf}	—	—	5	ns	
EXTAL external clock input wait time*1	t_{EXWT}	0.3	—	—	μs	—
EXTAL external clock input frequency	f_{EXTAL}	—	—	20	MHz	1.8 ≤ VCC ≤ 5.5
		—	—	4		1.6 ≤ VCC < 1.8
Main clock oscillator oscillation frequency	f_{MAIN}	1	—	20	MHz	1.8 ≤ VCC ≤ 5.5
		1	—	4		1.6 ≤ VCC < 1.8
LOCO clock oscillation frequency	f_{LOCO}	27.8528	32.768	37.6832	kHz	—
LOCO clock oscillation stabilization time	t_{LOCO}	—	—	100	μs	Figure 2.4
IWDT-dedicated clock oscillation frequency	f_{ILOCO}	12.75	15	17.25	kHz	—
MOCO clock oscillation frequency	f_{MOCO}	6.8	8	9.2	MHz	—
MOCO clock oscillation stabilization time	t_{MOCO}	—	—	1	μs	—

Table 2.20 Clock timing (2 of 2)

Parameter	Symbol	Min	Typ	Max	Unit	Test conditions
HOCO clock oscillation frequency*5	f_{HOCO24}	23.76	24	24.24	MHz	Ta = -40 to 105°C 1.6 ≤ VCC ≤ 5.5
	f_{HOCO32}	31.68	32	32.32		Ta = -40 to 105°C 1.6 ≤ VCC ≤ 5.5
	f_{HOCO48}	47.52	48	48.48		Ta = -40 to 105°C 1.6 ≤ VCC ≤ 5.5
	f_{HOCO64}	63.36	64	64.64		Ta = -40 to 105°C 1.6 ≤ VCC ≤ 5.5
HOCO clock oscillation stabilization time*3 *4	t_{HOCO24} t_{HOCO32} t_{HOCO48} t_{HOCO64}	—	6.7	7.7	μs	Figure 2.5
Sub-clock oscillator oscillation frequency	f_{SUB}	—	32.768	—	kHz	—
Sub-clock oscillation stabilization time*2	t_{SUBOSC}	—	0.5	—	s	Figure 2.6

Note 1. Time until the clock can be used after the Main Clock Oscillator stop bit (MOSCCR.MOSTP) is set to 0 (operating) when the external clock is stable.
Note 2. After changing the setting of the SOSCCR.SOSTP bit to start sub-clock oscillator operation, only start using the sub-clock oscillator after the sub-clock oscillation stabilization wait time elapsed. Use the oscillator wait time value recommended by the oscillator manufacturer.
Note 3. This is a characteristic when the HOCOCR.HCSTP bit is set to 0 (oscillation) in the MOCO stop state. When the HOCOCR.HCSTP bit is set to 0 (oscillation) during MOCO oscillation, this specification is shortened by 1 μs.
Note 4. Check OSCSF.HOCOSF to confirm whether stabilization time has elapsed.
Note 5. Accuracy at production test.

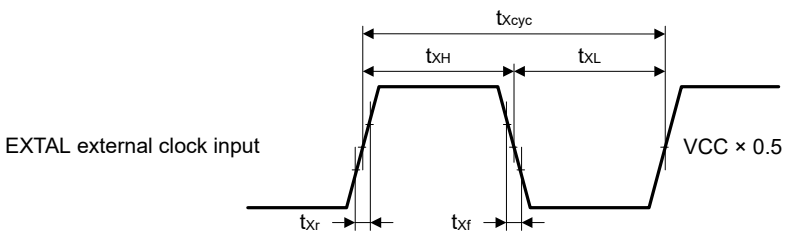

Figure 2.3 EXTAL external clock input timing

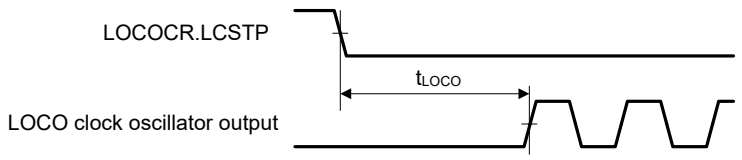

Figure 2.4 LOCO clock oscillation start timing

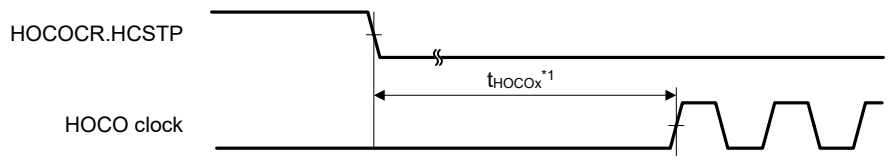

Note: x = 24, 32, 48, 64

Figure 2.5 HOCO clock oscillation start timing (started by setting the HOCOCR.HCSTP bit)

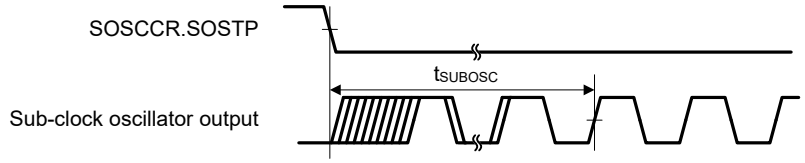

Figure 2.6 Sub-clock oscillation start timing

2.3.3 Reset Timing

Table 2.21 Reset timing

Parameter		Symbol	Min	Typ	Max	Unit	Test conditions
RES pulse width	At power-on	t_{RESWP}	10	—	—	ms	Figure 2.7
	Not at power-on	t_{RESW}	30	—	—	μs	Figure 2.8
Wait time after RES cancellation (at power-on)	LVD0 enabled*1	t_{RESWT}	—	0.9	—	ms	Figure 2.7
	LVD0 disabled*2		—	0.2	—		
Wait time after RES cancellation (during powered-on state)	LVD0 enabled*1	t_{RESWT2}	—	0.9	—	ms	Figure 2.8
	LVD0 disabled*2		—	0.2	—		
Wait time after internal reset cancellation (Watchdog timer reset, SRAM parity error reset, bus master MPU error reset, bus slave MPU error reset, stack pointer error reset, software reset)	LVD0 enabled*1	t_{RESWT3}	—	0.9	—	ms	Figure 2.9
	LVD0 disabled*2		—	0.15	—		

Note 1. When OFS1.LVDAS = 0.
Note 2. When OFS1.LVDAS = 1.

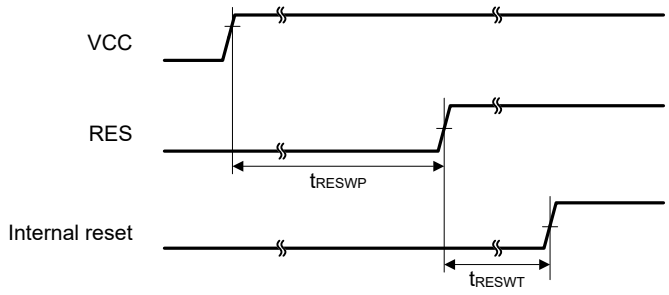

Figure 2.7 Reset input timing at power-on

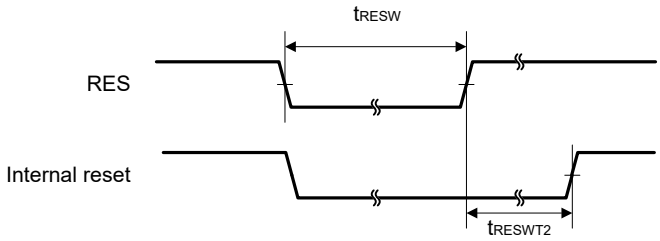

Figure 2.8 Reset input timing (1)

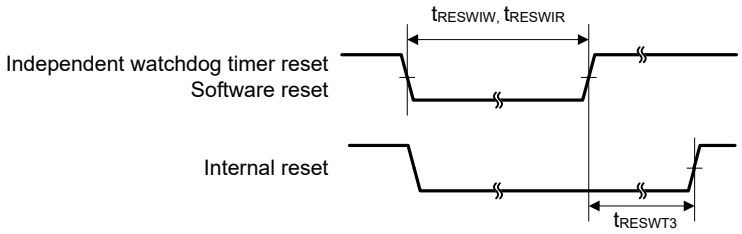

Figure 2.9 Reset input timing (2)

2.3.4 Wakeup Time

Table 2.22 Timing of recovery from low power modes (1)

Parameter				Symbol	Min	Typ	Max	Unit	Test conditions
Recovery time from Software Standby mode*1	High-speed mode	Crystal resonator connected to main clock oscillator	System clock source is main clock oscillator (20 MHz)*2	t_{SBYMC}	—	2	3	ms	Figure 2.10
		External clock input to main clock oscillator	System clock source is main clock oscillator (20 MHz)*3	t_{SBYEX}	—	2.4	3.1	μs	
		System clock source is HOCO (HOCO clock is 32 MHz)*4		t_{SBYHO}	—	7.4	9.1	μs	
		System clock source is HOCO (HOCO clock is 48 MHz)*5		t_{SBYHO}	—	7.3	8.9	μs	
		System clock source is HOCO (HOCO clock is 64 MHz)*4		t_{SBYHO}	—	7.4	9.1	μs	
		System clock source is MOCO (8 MHz)		t_{SBYMO}	—	4	5	μs	

Note 1. The division ratio of ICLK and PCLKx is the minimum division ratio within the allowable frequency range. The recovery time is determined by the system clock source.
Note 2. The Main Clock Oscillator Wait Control Register (MOSCWTCR) is set to 0x05.
Note 3. The Main Clock Oscillator Wait Control Register (MOSCWTCR) is set to 0x00.
Note 4. The system clock is 32 MHz.
Note 5. The system clock is 48 MHz.

Table 2.23 Timing of recovery from low power modes (2)

Parameter				Symbol	Min	Typ	Max	Unit	Test conditions
Recovery time from Software Standby mode*1	Middle-speed mode	Crystal resonator connected to main clock oscillator	System clock source is main clock oscillator (20 MHz)*2	t_{SBYMC}	—	2	3	ms	Figure 2.10
		External clock input to main clock oscillator	System clock source is main clock oscillator (20 MHz)*3 VCC = 1.8 V to 5.5 V	t_{SBYEX}	—	2.4	3.1	μs	
			System clock source is main clock oscillator (4 MHz)*3 VCC = 1.6 V to 1.8 V		—	8.5	9.1		
		System clock source is HOCO	VCC = 1.8 V to 5.5 V*4	t_{SBYHO}	—	7.7	9.4	μs	
			VCC = 1.6 V to 1.8 V		—	15.7	17.9		
		System clock source is MOCO (8 MHz)	VCC = 1.8 V to 5.5 V	t_{SBYMO}	—	4	5	μs	
			VCC = 1.6 V to 1.8 V		—	7.2	9		

Note 1. The division ratio of ICLK and PCLKx is the minimum division ratio within the allowable frequency range. The recovery time is determined by the system clock source.
Note 2. The Main Clock Oscillator Wait Control Register (MOSCWTCR) is set to 0x05.
Note 3. The Main Clock Oscillator Wait Control Register (MOSCWTCR) is set to 0x00.
Note 4. The system clock is 24 MHz.

Table 2.24 Timing of recovery from low power modes (3)

Parameter				Symbol	Min	Typ	Max	Unit	Test conditions
Recovery time from Software Standby mode*1	Low-speed mode	Crystal resonator connected to main clock oscillator	System clock source is main clock oscillator (2 MHz)*2	t_{SBYMC}	—	2	3	ms	Figure 2.10
		External clock input to main clock oscillator	System clock source is main clock oscillator (2 MHz)*3	t_{SBYEX}	—	14.5	16	μs	
		System clock source is MOCO (8 MHz)		t_{SBYMO}	—	12	15	μs	

Note 1. The division ratio of ICLK and PCLKx is the minimum division ratio within the allowable frequency range. The recovery time is determined by the system clock source.
Note 2. The Main Clock Oscillator Wait Control Register (MOSCWTCR) is set to 0x05.
Note 3. The Main Clock Oscillator Wait Control Register (MOSCWTCR) is set to 0x00.

Table 2.25 Timing of recovery from low power modes (4)

Parameter			Symbol	Min	Typ	Max	Unit	Test conditions
Recovery time from Software Standby mode*1	Subosc-speed mode	System clock source is sub-clock oscillator (32.768 kHz)	t_{SBYSC}	—	0.85	1	ms	Figure 2.10
		System clock source is LOCO (32.768 kHz)	t_{SBYLO}	—	0.85	1.2	ms	

Note 1. The sub-clock oscillator or LOCO itself continues oscillating in Software Standby mode during Subosc-speed mode.

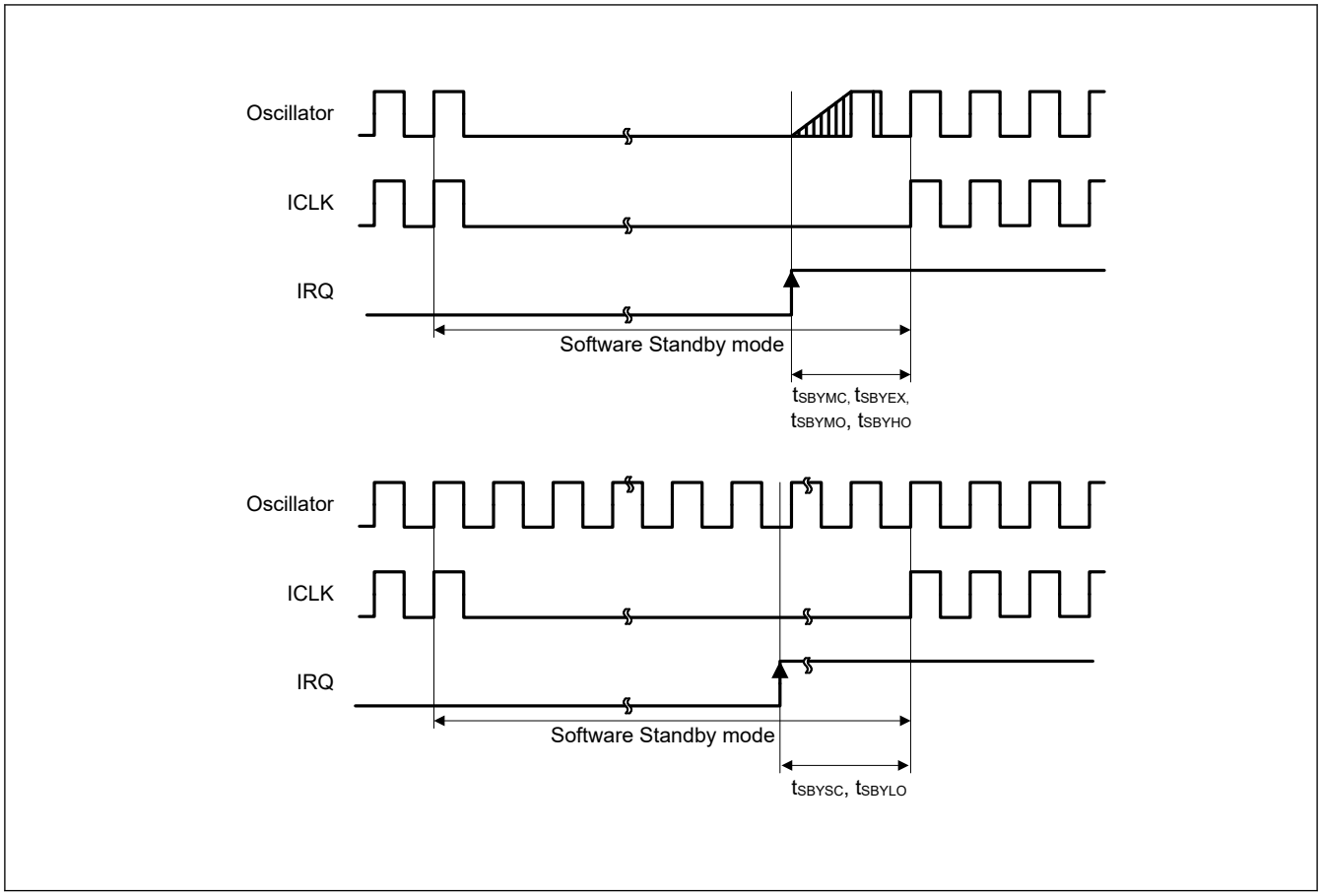

Figure 2.10 Software Standby mode cancellation timing

Table 2.26 Timing of recovery from low power modes (5)

Parameter		Symbol	Min	Typ	Max	Unit	Test conditions
Recovery time from Software Standby mode to Snooze mode	High-speed mode System clock source is HOCO	t_{SNZ}	—	6.6	8.1	μs	Figure 2.11
	Middle-speed mode System clock source is HOCO (24 MHz) VCC = 1.8 V to 5.5 V	t_{SNZ}	—	6.7	8.2	μs	
	Middle-speed mode System clock source is HOCO (24 MHz) VCC = 1.6 V to 1.8 V	t_{SNZ}	—	10.8	12.9	μs	
	Low-speed mode System clock source is MOCO (2 MHz)	t_{SNZ}	—	6.7	8.0	μs	

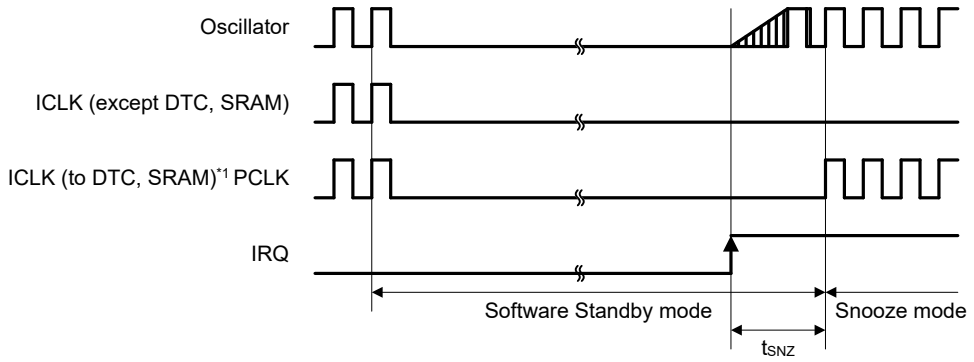

Note 1. When SNZCR.SNZDTCEN bit is set to 1, ICLK is supplied to DTC and SRAM.

Figure 2.11 Recovery timing from Software Standby mode to Snooze mode

2.3.5 NMI and IRQ Noise Filter

Table 2.27 NMI and IRQ noise filter

Parameter	Symbol	Min	Typ	Max	Unit	Test conditions	
NMI pulse width	t_{NMIW}	200	—	—	ns	NMI digital filter disabled	$t_{Pcyc} \times 2 \leq 200$ ns
		$t_{Pcyc} \times 2$*1	—	—			$t_{Pcyc} \times 2 > 200$ ns
		200	—	—		NMI digital filter enabled	$t_{NMICK} \times 3 \leq 200$ ns
		$t_{NMICK} \times 3.5$*2	—	—			$t_{NMICK} \times 3 > 200$ ns
IRQ pulse width	t_{IRQW}	200	—	—	ns	IRQ digital filter disabled	$t_{Pcyc} \times 2 \leq 200$ ns
		$t_{Pcyc} \times 2$*1	—	—			$t_{Pcyc} \times 2 > 200$ ns
		200	—	—		IRQ digital filter enabled	$t_{IRQCK} \times 3 \leq 200$ ns
		$t_{IRQCK} \times 3.5$*3	—	—			$t_{IRQCK} \times 3 > 200$ ns

Note: 200 ns minimum in Software Standby mode.
Note: If the clock source is being switched it is needed to add 4 clock cycle of switched source.
Note 1. t_{Pcyc} indicates the PCLKB cycle.

Note 2. t_{NMICK} indicates the cycle of the NMI digital filter sampling clock.
Note 3. t_{IRQCK} indicates the cycle of the IRQi digital filter sampling clock (i = 0 to 7).

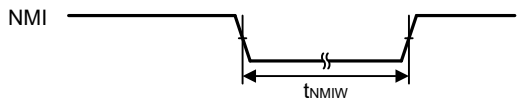

Figure 2.12 NMI interrupt input timing

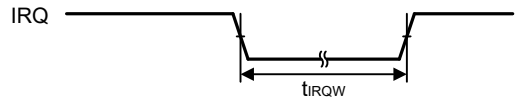

Figure 2.13 IRQ interrupt input timing

2.3.6 I/O Ports, POEG, GPT, AGT, KINT, and ADC12 Trigger Timing

Table 2.28 I/O Ports, POEG, GPT, AGT, KINT, and ADC12 trigger timing

Parameter			Symbol	Min	Max	Unit	Test conditions
I/O Ports	Input data pulse width	2.7 V ≤ VCC ≤ 5.5 V	t_{PRW}	2	—	t_{Pcyc}	Figure 2.14
		2.4 V ≤ VCC < 2.7 V		3			
		1.6 V ≤ VCC < 2.4 V		4			
POEG	POEG input trigger pulse width		t_{POEW}	3	—	t_{Pcyc}	Figure 2.15
GPT	Input capture pulse width	Single edge	t_{GTICW}	1.5	—	t_{PDcyc}	Figure 2.16
		Dual edge		2.5	—		
AGT	AGTIO, AGTEE input cycle	1.8 V ≤ VCC ≤ 5.5 V	t_{ACYC} *1	250	—	ns	Figure 2.17
		1.6 V ≤ VCC < 1.8 V		2000	—	ns	
	AGTIO, AGTEE input high-level width, low-level width	1.8 V ≤ VCC ≤ 5.5 V	t_{ACKWH}, t_{ACKWL}	100	—	ns	
		1.6 V ≤ VCC < 1.8 V		800	—	ns	
	AGTIO, AGTO, AGTOA, AGTOB output cycle	2.7 V ≤ VCC ≤ 5.5 V	t_{ACYC2}	62.5	—	ns	Figure 2.17
		2.4 V ≤ VCC < 2.7 V		125	—	ns	
		1.8 V ≤ VCC < 2.4 V		250	—	ns	
		1.6 V ≤ VCC < 1.8 V		500	—	ns	
ADC12	12-bit A/D converter trigger input pulse width		t_{TRGW}	1.5	—	t_{Pcyc}	Figure 2.18
KINT	KRn (n = 00 to 04) pulse width		t_{KR}	250	—	ns	Figure 2.19

Note 1. Constraints on AGTIO input: t_{Pcyc} × 2 (t_{Pcyc}: PCLKB cycle) < t_{ACYC}.

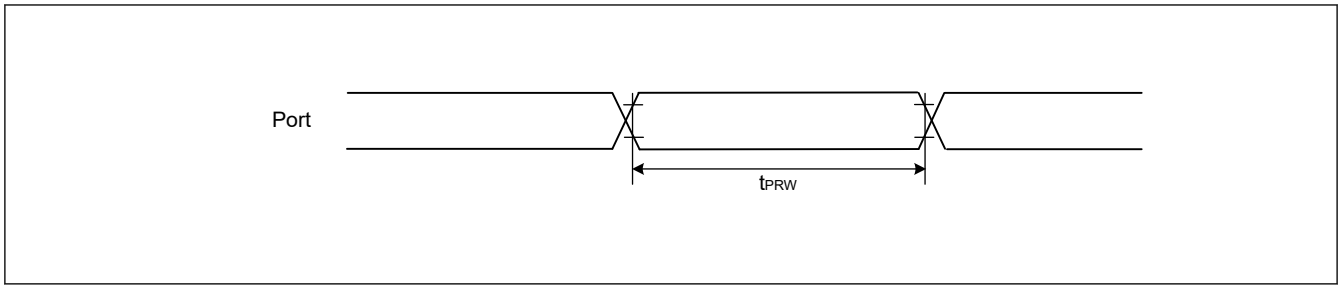

Figure 2.14 I/O ports input timing

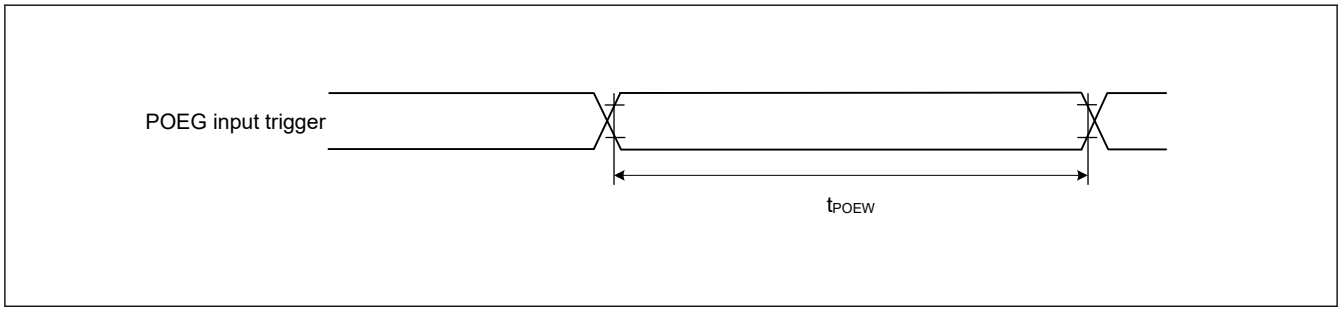

Figure 2.15 POEG input trigger timing

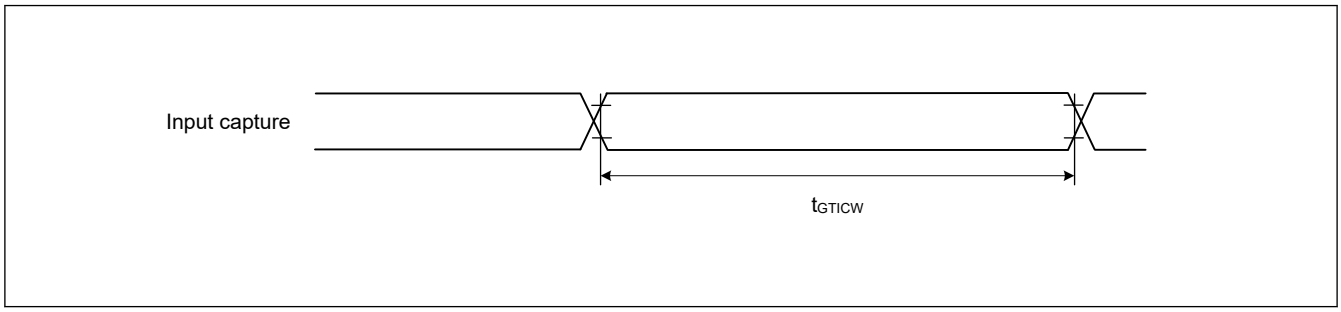

Figure 2.16 GPT input capture timing

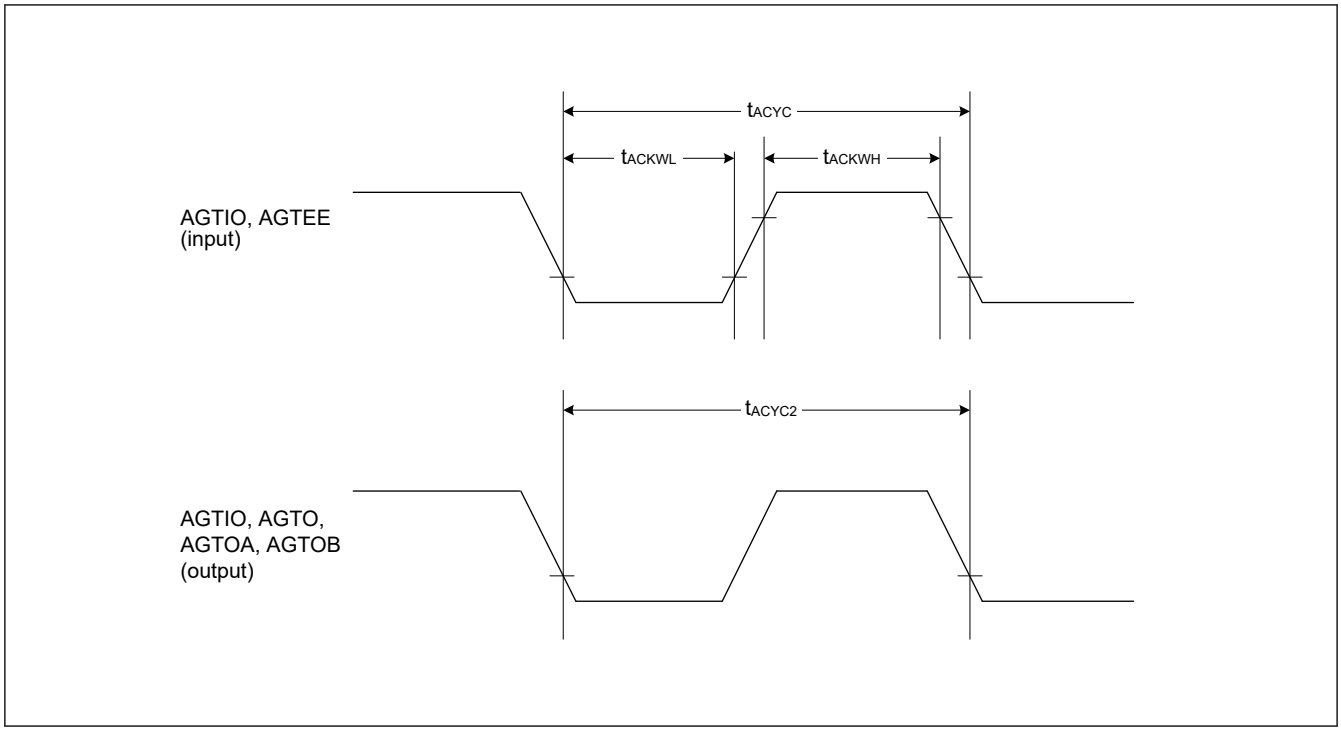

Figure 2.17 AGT I/O timing

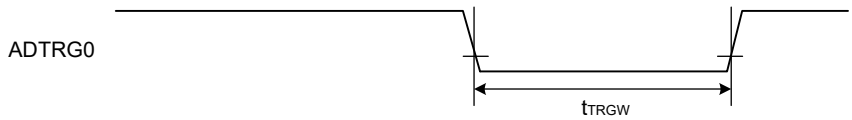

Figure 2.18 ADC12 trigger input timing

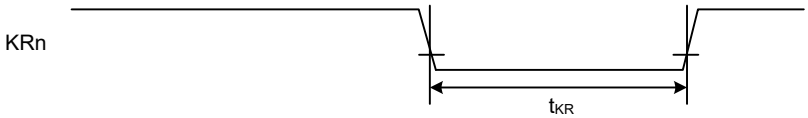

Note: n = 00 to 04

Figure 2.19 Key interrupt input timing

2.3.7 CAC Timing

Table 2.29 CAC timing

Conditions: VCC = AVCC0 = 1.6 to 5.5 V

Parameter			Symbol	Min	Typ	Max	Unit	Test conditions
CAC	CACREF input pulse width	t_{Pcyc}*1 ≤ t_{CAC}*2	t_{CACREF}	4.5 × t_{CAC} + 3 × t_{Pcyc}	—	—	ns	—
		t_{Pcyc}*1 > t_{CAC}*2		5 × t_{CAC} + 6.5 × t_{Pcyc}	—	—	ns	

Note 1. t_{Pcyc}: PCLKB cycle.
Note 2. t_{CAC}: CAC count clock source cycle.

2.3.8 SCI Timing

Table 2.30 SCI timing (1)

Conditions: VCC = AVCC0 = 1.6 to 5.5 V

Parameter				Symbol	Min	Max	Unit	Test conditions
SCI	Input clock cycle	Asynchronous	2.7 V ≤ VCC ≤ 5.5 V	t_{Scyc}	125	—	ns	Figure 2.20
			2.4 V ≤ VCC < 2.7 V		250	—		
			1.8 V ≤ VCC < 2.4 V		500	—		
			1.6 V ≤ VCC < 1.8 V		1000	—		
		Clock synchronous	2.7 V ≤ VCC ≤ 5.5 V		187.5	—		
			2.4 V ≤ VCC < 2.7 V		375	—		
			1.8 V ≤ VCC < 2.4 V		750	—		
			1.6 V ≤ VCC < 1.8 V		1500	—		
	Input clock pulse width			t_{SCKW}	0.4	0.6	t_{Scyc}	
	Input clock rise time			t_{SCKr}	—	20	ns	
	Input clock fall time			t_{SCKf}	—	20	ns	
	Output clock cycle	Asynchronous	2.7 V ≤ VCC ≤ 5.5 V	t_{Scyc}	187.5	—	ns	
			2.4 V ≤ VCC < 2.7 V		375	—		
			1.8 V ≤ VCC < 2.4 V		750	—		
			1.6 V ≤ VCC < 1.8 V		1500	—		
		Clock synchronous	2.7 V ≤ VCC ≤ 5.5 V		125	—		
			2.4 V ≤ VCC < 2.7 V		250	—		
			1.8 V ≤ VCC < 2.4 V		500	—		
			1.6 V ≤ VCC < 1.8 V		1000	—		
	Output clock pulse width			t_{SCKW}	0.4	0.6	t_{Scyc}	
	Output clock rise time		1.8 V ≤ VCC ≤ 5.5 V	t_{SCKr}	—	20	ns	
			1.6 V ≤ VCC < 1.8 V		—	30		
	Output clock fall time		1.8 V ≤ VCC ≤ 5.5 V	t_{SCKf}	—	20	ns	
			1.6 V ≤ VCC < 1.8 V		—	30		
	Transmit data delay time (master)	Clock synchronous	1.8 V ≤ VCC ≤ 5.5 V	t_{TXD}	—	40	ns	Figure 2.21
			1.6 V ≤ VCC < 1.8 V		—	45		
	Transmit data delay time (slave)	Clock synchronous	2.7 V ≤ VCC ≤ 5.5 V		—	55	ns	
			2.4 V ≤ VCC < 2.7 V		—	60		
			1.8 V ≤ VCC < 2.4 V		—	100		
			1.6 V ≤ VCC < 1.8 V		—	125		
	Receive data setup time (master)	Clock synchronous	2.7 V ≤ VCC ≤ 5.5 V	t_{RXS}	45	—	ns	
			2.4 V ≤ VCC < 2.7 V		55	—		
			1.8 V ≤ VCC < 2.4 V		90	—		
			1.6 V ≤ VCC < 1.8 V		110	—		
	Receive data setup time (slave)	Clock synchronous	2.7 V ≤ VCC ≤ 5.5 V		40	—	ns	
			1.6 V ≤ VCC < 2.7 V		45	—		
	Receive data hold time (master)	Clock synchronous		t_{RXH}	5	—	ns	
	Receive data hold time (slave)	Clock synchronous		t_{RXH}	40	—	ns	

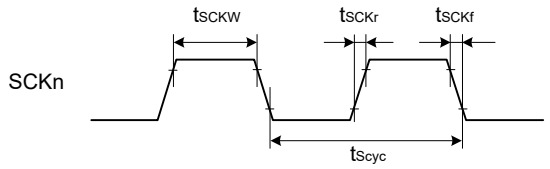

Note: n = 0 to 2, 9

Figure 2.20 SCK clock input timing

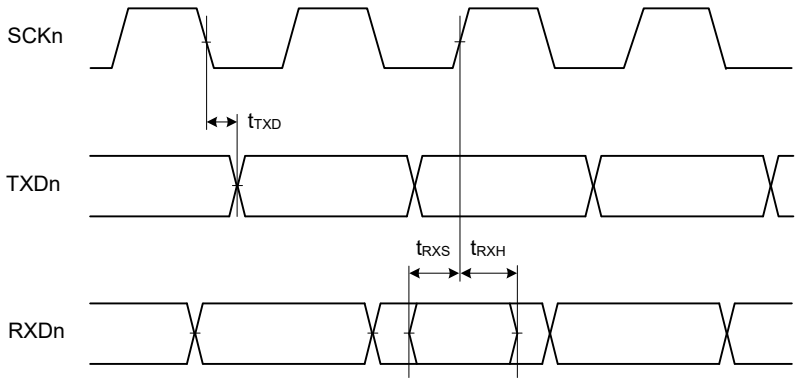

Note: n = 0 to 2, 9

Figure 2.21 SCI input/output timing in clock synchronous mode

Table 2.31 SCI timing (2) (1 of 2)

Conditions: VCC = AVCC0 = 1.6 to 5.5 V

Parameter				Symbol	Min	Max	Unit*1	Test conditions
Simple SPI	SCK clock cycle output (master)		2.7 V ≤ VCC ≤ 5.5 V	t_{SPcyc}	125	—	ns	Figure 2.22
			2.4 V ≤ VCC < 2.7 V		250	—		
			1.8 V ≤ VCC < 2.4 V		500	—		
			1.6 V ≤ VCC < 1.8 V		1000	—		
	SCK clock cycle input (slave)		2.7 V ≤ VCC ≤ 5.5 V		187.5	—		
			2.4 V ≤ VCC < 2.7 V		375	—		
			1.8 V ≤ VCC < 2.4 V		750	—		
			1.6 V ≤ VCC < 1.8 V		1500	—		
	SCK clock high pulse width			t_{SPCKWH}	0.4	0.6	t_{SPcyc}	
	SCK clock low pulse width			t_{SPCKWL}	0.4	0.6	t_{SPcyc}	
	SCK clock rise and fall time		1.8 V ≤ VCC ≤ 5.5 V	t_{SPCKr}, t_{SPCKf}	—	20	ns	
			1.6 V ≤ VCC < 1.8 V		—	30		
	Data input setup time	Master	2.7 V ≤ VCC ≤ 5.5 V	t_{SU}	45	—	ns	Figure 2.23 to Figure 2.26
			2.4 V ≤ VCC < 2.7 V		55	—		
			1.8 V ≤ VCC < 2.4 V		80	—		
			1.6 V ≤ VCC < 1.8 V		110	—		
		Slave	2.7 V ≤ VCC ≤ 5.5 V		40	—		
			1.6 V ≤ VCC < 2.7 V		45	—		
	Data input hold time	Master		t_H	33.3	—	ns	
		Slave			40	—		
	SS input setup time			t_{LEAD}	1	—	t_{SPcyc}	
	SS input hold time			t_{LAG}	1	—	t_{SPcyc}	
	Data output delay time	Master	1.8 V ≤ VCC ≤ 5.5 V	t_{OD}	—	40	ns	
			1.6 V ≤ VCC < 1.8 V		—	50		
		Slave	2.4 V ≤ VCC ≤ 5.5 V		—	65		
			1.8 V ≤ VCC < 2.4 V		—	100		
			1.6 V ≤ VCC < 1.8 V		—	125		
	Data output hold time	Master	2.7 V ≤ VCC ≤ 5.5 V	t_{OH}	-10	—	ns	
			2.4 V ≤ VCC < 2.7 V		-20	—		
			1.8 V ≤ VCC < 2.4 V		-30	—		
			1.6 V ≤ VCC < 1.8 V		-40	—		
		Slave			-10	—		
	Data rise and fall time	Master	1.8 V ≤ VCC ≤ 5.5 V	t_{Dr}, t_{Df}	—	20	ns	
			1.6 V ≤ VCC < 1.8 V		—	30		
		Slave	1.8 V ≤ VCC ≤ 5.5 V		—	20		
			1.6 V ≤ VCC < 1.8 V		—	30		

Table 2.31 SCI timing (2) (2 of 2)

Conditions: VCC = AVCC0 = 1.6 to 5.5 V

Parameter				Symbol	Min	Max	Unit*1	Test conditions
Simple SPI	Slave access time	2.4 V ≤ VCC ≤ 5.5 V		t_{SA}	—	6	t_{Pcyc}	Figure 2.26
		1.8 V ≤ VCC < 2.4 V	24 MHz ≤ PCLKB ≤ 32 MHz		—	7		
			PCLKB < 24 MHz		—	6		
		1.6 V ≤ VCC < 1.8 V			—	6		
	Slave output release time	2.4 V ≤ VCC ≤ 5.5 V		t_{REL}	—	6	t_{Pcyc}	
		1.8 V ≤ VCC < 2.4 V	24 MHz ≤ PCLKB ≤ 32 MHz		—	7		
			PCLKB < 24 MHz		—	6		
		1.6 V ≤ VCC < 1.8 V			—	6		

Note 1. t_{Pcyc}: PCLKB cycle.

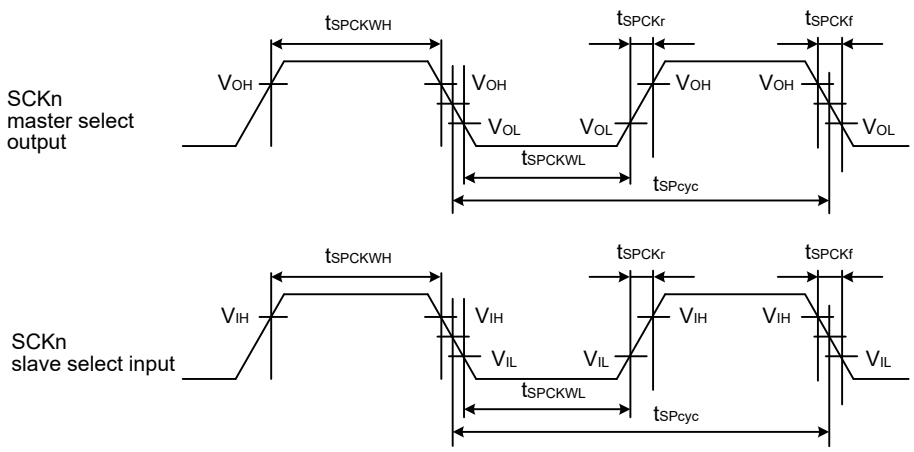

V_{OH} = 0.7 × VCC, V_{OL} = 0.3 × VCC, V_{IH} = 0.7 × VCC, V_{IL} = 0.3 × VCC

Note: n = 0 to 2, 9

Figure 2.22 SCI simple SPI mode clock timing

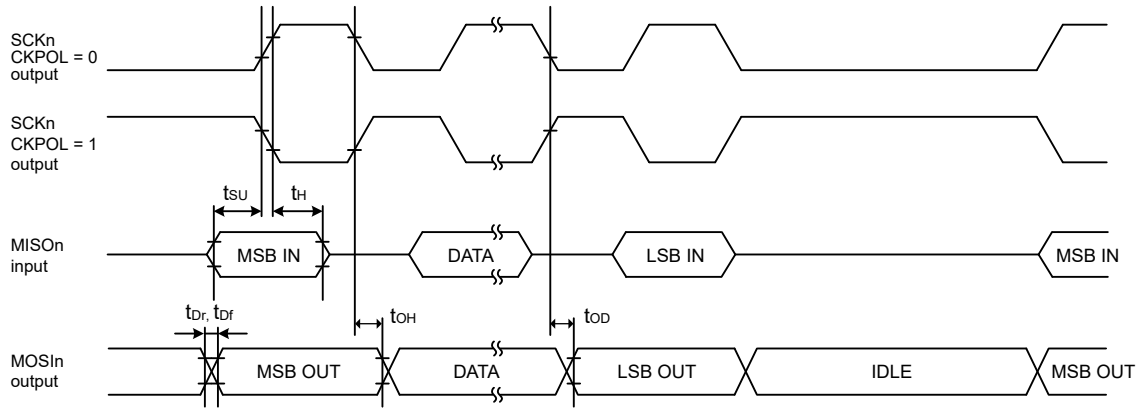

Note: n = 0 to 2, 9

Figure 2.23 SCI simple SPI mode timing (master, CKPH = 1)

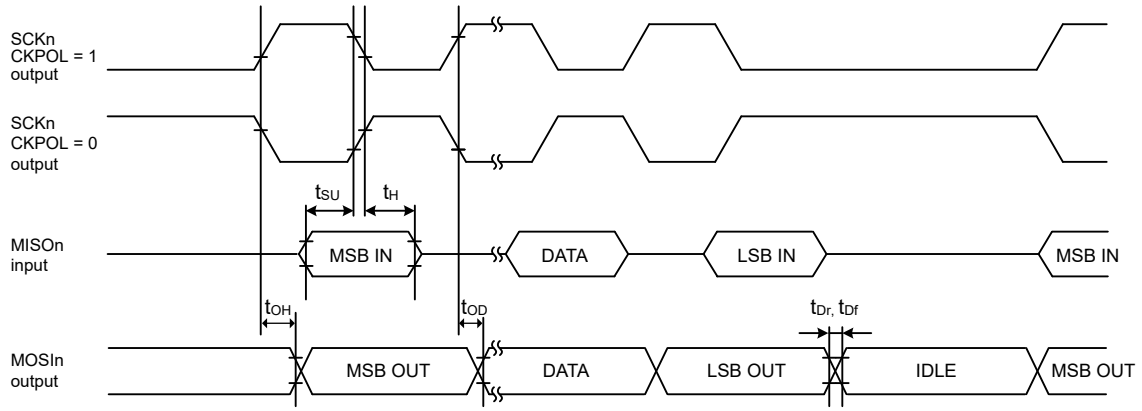

Note: n = 0 to 2, 9

Figure 2.24 SCI simple SPI mode timing (master, CKPH = 0)

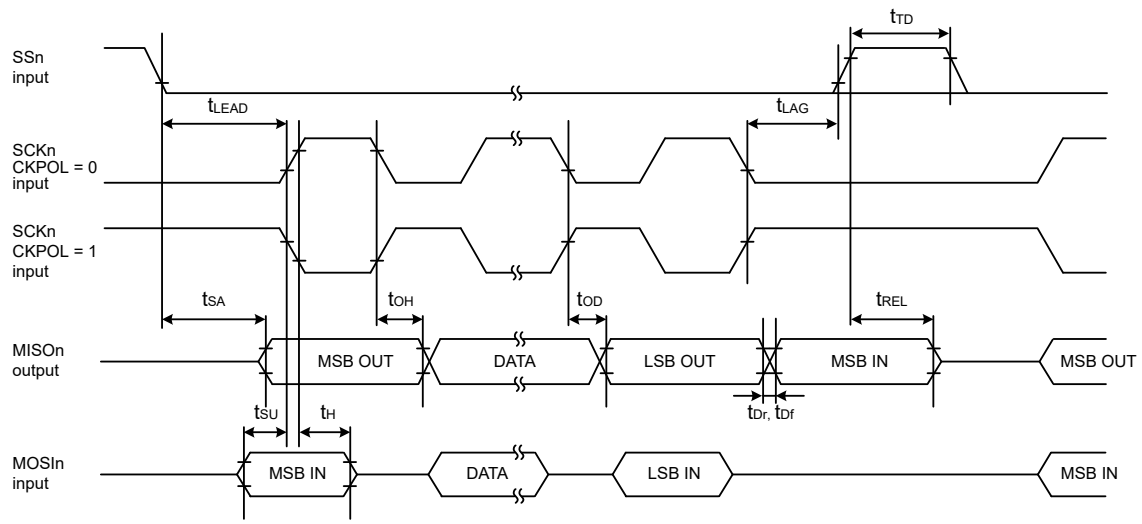

Note: n = 0 to 2, 9

Figure 2.25 SCI simple SPI mode timing (slave, CKPH = 1)

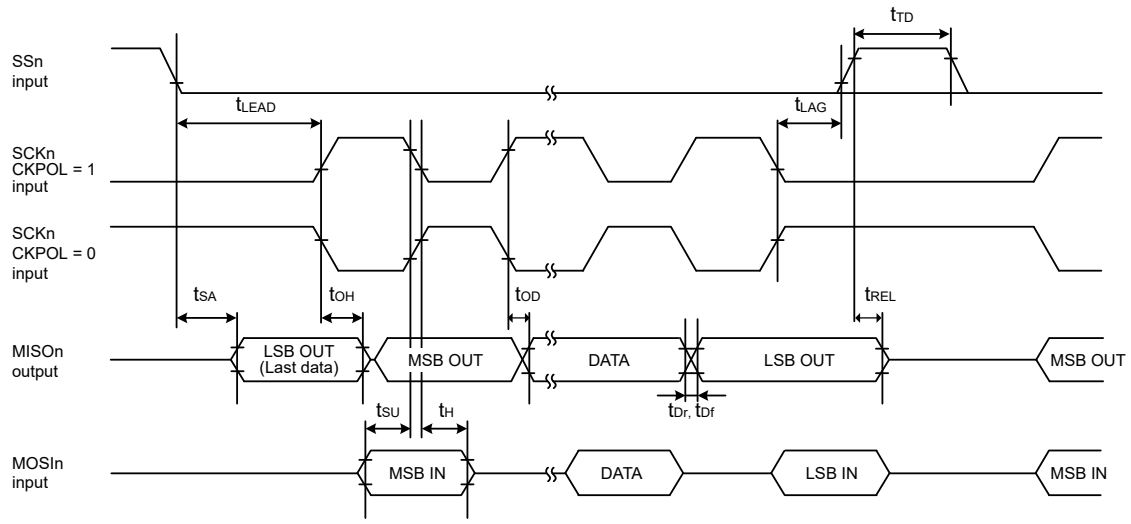

Note: n = 0 to 2, 9

Figure 2.26 SCI simple SPI mode timing (slave, CKPH = 0)

Table 2.32 SCI timing (3)

Conditions: VCC = AVCC0 = 2.7 to 5.5 V

Parameter		Symbol	Min	Max	Unit	Test conditions
Simple IIC (Standard mode)	SDA input rise time	t_{Sr}	—	1000	ns	Figure 2.27
	SDA input fall time	t_{Sf}	—	300	ns	
	SDA input spike pulse removal time	t_{SP}	0	$4 \times t_{IICcyc}$ *1	ns	
	Data input setup time	t_{SDAS}	250	—	ns	
	Data input hold time	t_{SDAH}	0	—	ns	
	SCL, SDA capacitive load	C_b *2	—	400	pF	
Simple IIC (Fast mode)	SDA input rise time	t_{Sr}	—	300	ns	Figure 2.27
	SDA input fall time	t_{Sf}	—	300	ns	
	SDA input spike pulse removal time	t_{SP}	0	$4 \times t_{IICcyc}$ *1	ns	
	Data input setup time	t_{SDAS}	100	—	ns	
	Data input hold time	t_{SDAH}	0	—	ns	
	SCL, SDA capacitive load	C_b *2	—	400	pF	

Note 1. t_{IICcyc}: Clock cycle selected by the SMR.CKS[1:0] bits.
Note 2. C_b indicates the total capacity of the bus line.

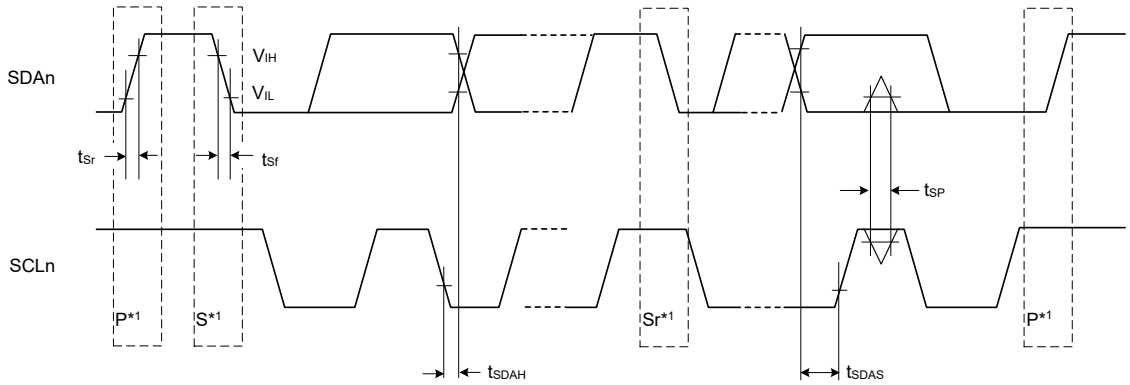

Test conditions:
V_{IH} = VCC × 0.7, V_{IL} = VCC × 0.3
V_{OL} = 0.6 V, I_{OL} = 6 mA

Note: n = 0 to 2, 9
Note 1. S, P, and Sr indicate the following conditions:
S: Start condition
P: Stop condition
Sr: Restart condition

Figure 2.27 SCI simple IIC mode timing

2.3.9 SPI Timing

Table 2.33 SPI timing (1 of 3)

Parameter				Symbol	Min	Max	Unit*1	Test conditions
SPI	RSPCK clock cycle	Master	2.7 V ≤ VCC ≤ 5.5 V	t_{SPcyc}	62.5	—	ns	Figure 2.28 C = 30 pF
			2.4 V ≤ VCC < 2.7 V		125	—		
			1.8 V ≤ VCC < 2.4 V		250	—		
			1.6 V ≤ VCC < 1.8 V		500	—		
		Slave	2.7 V ≤ VCC ≤ 5.5 V		187.5	—		
			2.4 V ≤ VCC < 2.7 V		375	—		
			1.8 V ≤ VCC < 2.4 V		750	—		
			1.6 V ≤ VCC < 1.8 V		1500	—		
	RSPCK clock high pulse width	Master		t_{SPCKWH}	(t_{SPcyc} - t_{SPCKr} - t_{SPCKf}) / 2 - 3	—	ns	
		Slave			3 × t_{Pcyc}	—		
	RSPCK clock low pulse width	Master		t_{SPCKWL}	(t_{SPcyc} - t_{SPCKr} - t_{SPCKf}) / 2 - 3	—	ns	
		Slave			3 × t_{Pcyc}	—		
	RSPCK clock rise and fall time	Output	2.7 V ≤ VCC ≤ 5.5 V	t_{SPCKr}, t_{SPCKf}	—	10	ns	
			2.4 V ≤ VCC < 2.7 V		—	15		
			1.8 V ≤ VCC ≤ 2.4 V		—	20		
			1.6 V ≤ VCC < 1.8 V		—	30		
		Input			—	0.1	μs/V	

Table 2.33 SPI timing (2 of 3)

Parameter					Symbol	Min	Max	Unit*1	Test conditions
SPI	Data input setup time	Master	2.7 V ≤ VCC ≤ 5.5 V		t_{SU}	10	—	ns	Figure 2.29 to Figure 2.34 C = 30 pF
			2.4 V ≤ VCC < 2.7 V	16 MHz < PCLKB ≤ 32 MHz		30	—		
				PCLKB ≤ 16 MHz		10	—		
			1.8 V ≤ VCC < 2.4 V	16 MHz < PCLKB ≤ 32 MHz		55	—		
				8 MHz < PCLKB ≤ 16 MHz		30	—		
				PCLKB ≤ 8 MHz		10	—		
			1.6 V ≤ VCC < 1.8 V			10	—		
		Slave	2.4 V ≤ VCC ≤ 5.5 V			10	—		
			1.8 V ≤ VCC < 2.4 V			15	—		
			1.6 V ≤ VCC < 1.8 V			20	—		
	Data input hold time	Master (RSPCK is PCLKB/2)			t_{HF}	0	—	ns	
		Master (RSPCK is not PCLKB/2)			t_{H}	t_{Pcyc}	—		
		Slave			t_{H}	20	—		
SPI	SSL setup time	Master	1.8 V ≤ VCC ≤ 5.5 V		t_{LEAD}	-30 + N × t_{SPcyc}*2	—	ns	
			1.6 V ≤ VCC < 1.8 V			-50 + N × t_{SPcyc}*2	—		
		Slave				6 × t_{Pcyc}	—	ns	
	SSL hold time	Master			t_{LAG}	-30 + N × t_{SPcyc}*3	—	ns	
		Slave				6 × t_{Pcyc}	—	ns	
	Data output delay time	Master	2.7 V ≤ VCC ≤ 5.5 V		t_{OD}	—	14	ns	
			2.4 V ≤ VCC < 2.7 V			—	20		
			1.8 V ≤ VCC < 2.4 V			—	25		
			1.6 V ≤ VCC < 1.8 V			—	30		
		Slave	2.7 V ≤ VCC ≤ 5.5 V			—	50		
			2.4 V ≤ VCC < 2.7 V			—	60		
			1.8 V ≤ VCC < 2.4 V			—	85		
			1.6 V ≤ VCC < 1.8 V			—	110		
	Data output hold time	Master			t_{OH}	0	—	ns	
		Slave				0	—		
	Successive transmission delay time	Master			t_{TD}	t_{SPcyc} + 2 × t_{Pcyc}	8 × t_{SPcyc} + 2 × t_{Pcyc}	ns	
		Slave				6 × t_{Pcyc}	—		

Table 2.33 SPI timing (3 of 3)

Parameter				Symbol	Min	Max	Unit*1	Test conditions
SPI	MOSI and MISO rise and fall time	Output	2.7 V ≤ VCC ≤ 5.5 V	t_{Dr}, t_{Df}	—	10	ns	Figure 2.29 to Figure 2.34 C = 30 pF
			2.4 V ≤ VCC < 2.7 V		—	15		
			1.8 V ≤ VCC < 2.4 V		—	20		
			1.6 V ≤ VCC < 1.8 V		—	30		
		Input			—	1	μs	
	SSL rise and fall time	Output	2.7 V ≤ VCC ≤ 5.5 V	t_{SSLr}, t_{SSLf}	—	10	ns	
			2.4 V ≤ VCC < 2.7 V		—	15		
			1.8 V ≤ VCC < 2.4 V		—	20		
			1.6 V ≤ VCC < 1.8 V		—	30		
		Input			—	1	μs	
	Slave access time		2.4 V ≤ VCC ≤ 5.5 V	t_{SA}	—	2 × t_{Pcyc} + 100	ns	Figure 2.33 and Figure 2.34 C = 30 pF
			1.8 V ≤ VCC < 2.4 V		—	2 × t_{Pcyc} + 140		
			1.6 V ≤ VCC < 1.8 V		—	2 × t_{Pcyc} + 180		
	Slave output release time		2.4 V ≤ VCC ≤ 5.5 V	t_{REL}	—	2 × t_{Pcyc} + 100	ns	
			1.8 V ≤ VCC < 2.4 V		—	2 × t_{Pcyc} + 140		
			1.6 V ≤ VCC < 1.8 V		—	2 × t_{Pcyc} + 180		

Note 1. t_{Pcyc}: PCLKB cycle.
Note 2. N is set as an integer from 1 to 8 by the SPCKD register.
Note 3. N is set as an integer from 1 to 8 by the SSLND register.

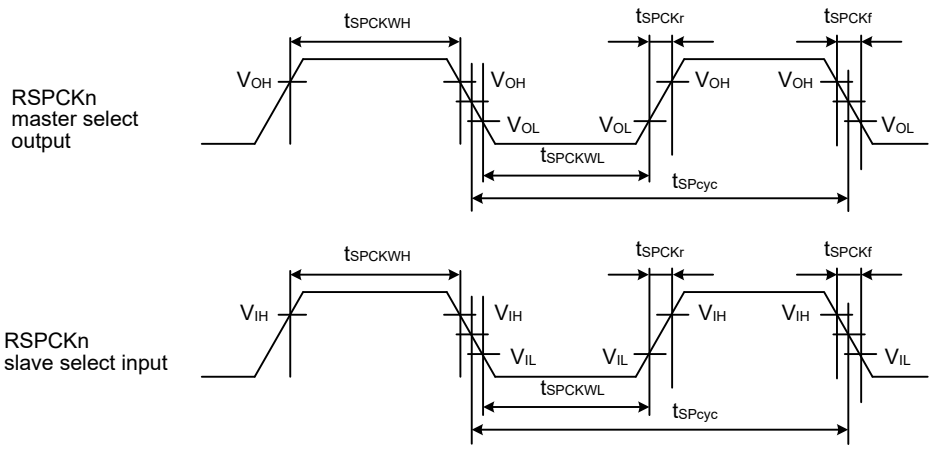

V_{OH} = 0.7 × VCC, V_{OL} = 0.3 × VCC, V_{IH} = 0.7 × VCC, V_{IL} = 0.3 × VCC

Note: n = A

Figure 2.28 SPI clock timing

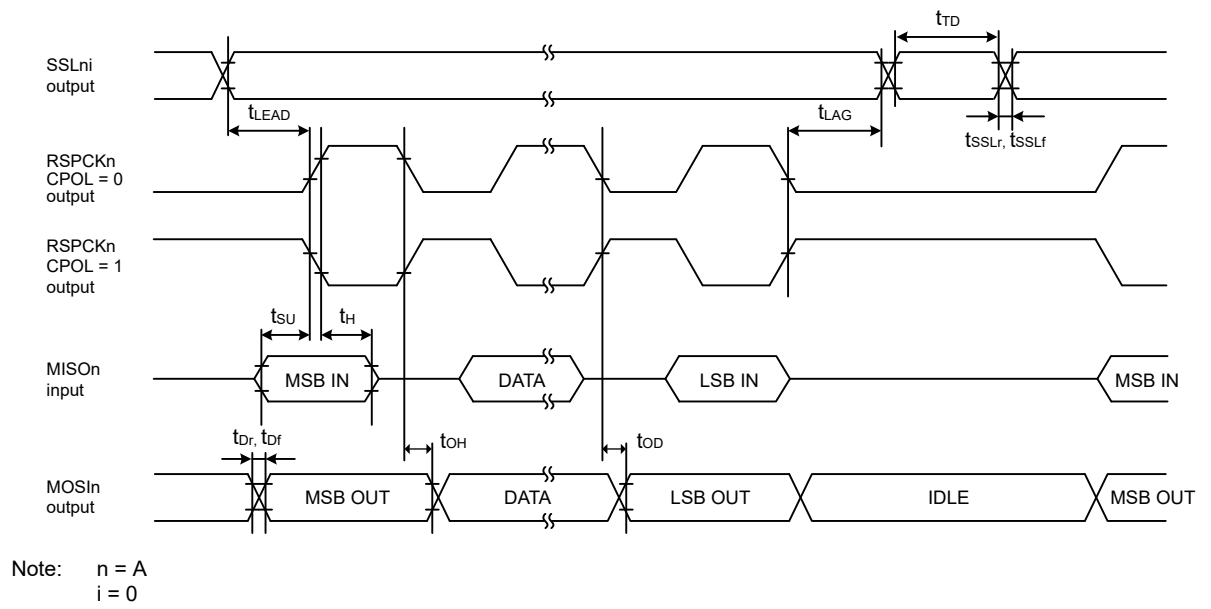

Figure 2.29 SPI timing (master, CPHA = 0) (bit rate: PCLKB division ratio is set to any value other than 1/2)

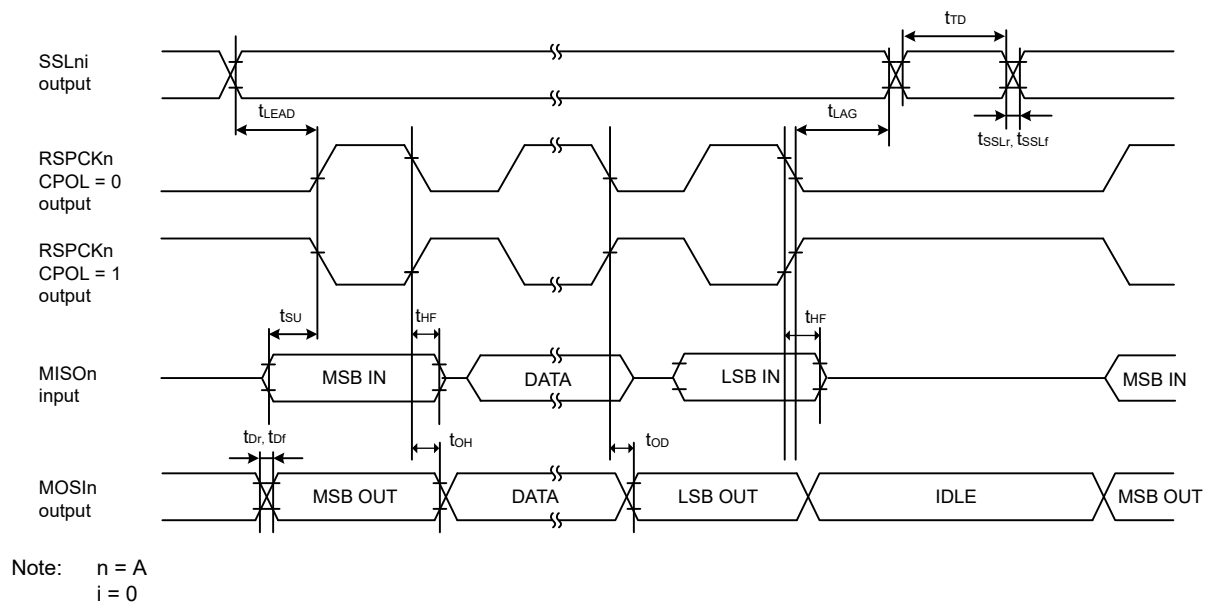

Figure 2.30 SPI timing (master, CPHA = 0) (bit rate: PCLKB division ratio is set to 1/2)

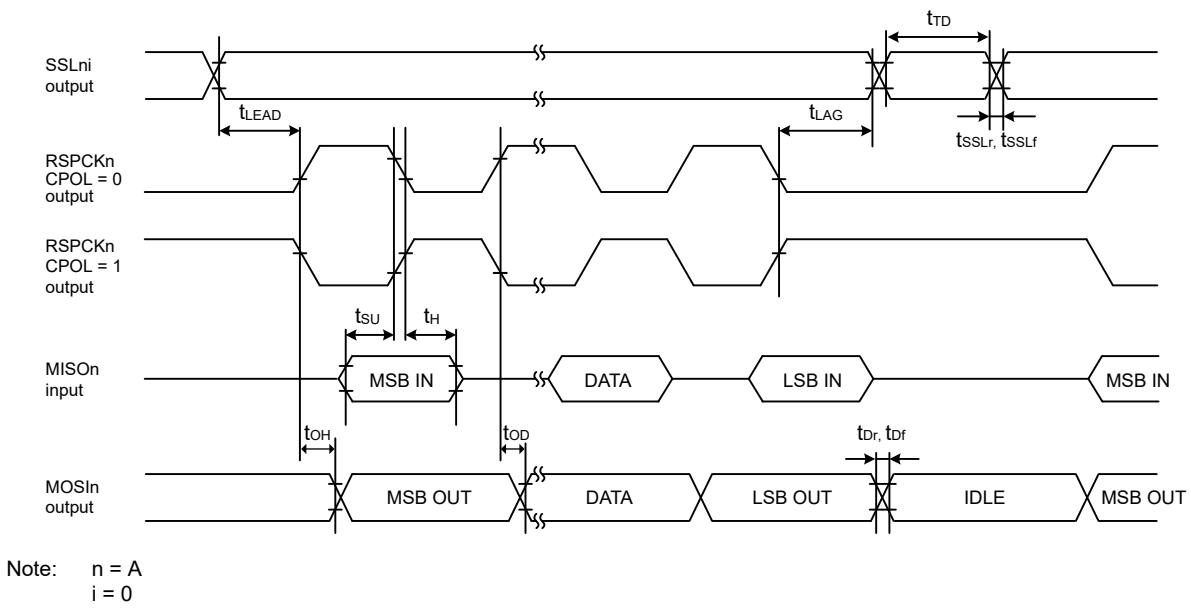

Figure 2.31 SPI timing (master, CPHA = 1) (bit rate: PCLKB division ratio is set to any value other than 1/2)

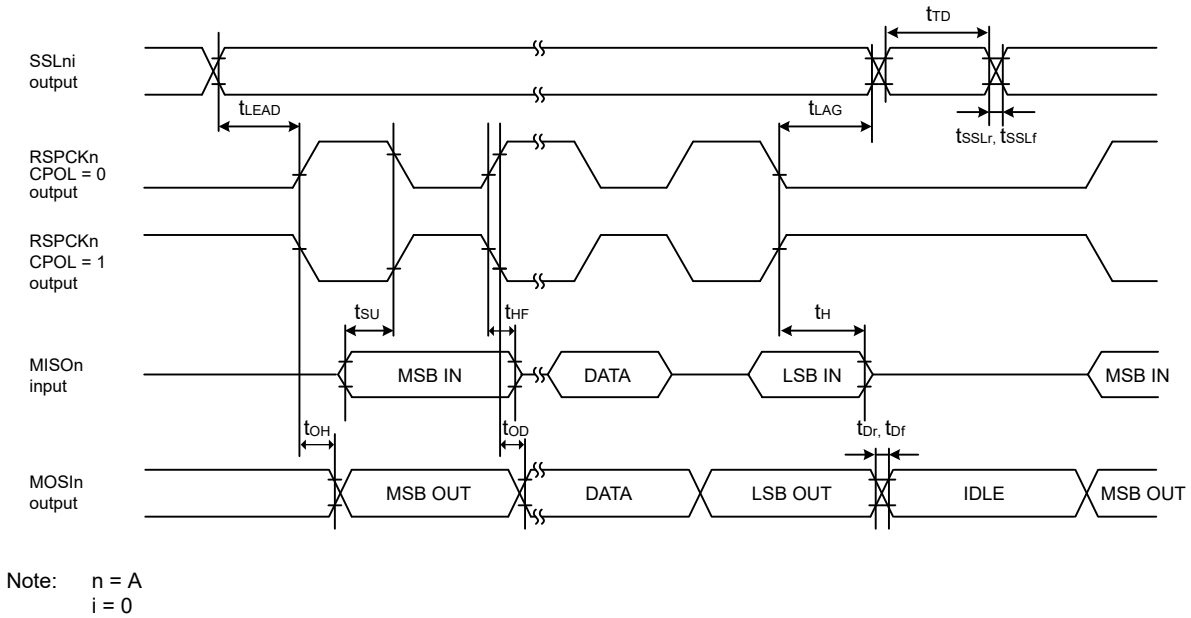

Figure 2.32 SPI timing (master, CPHA = 1) (bit rate: PCLKB division ratio is set to 1/2)

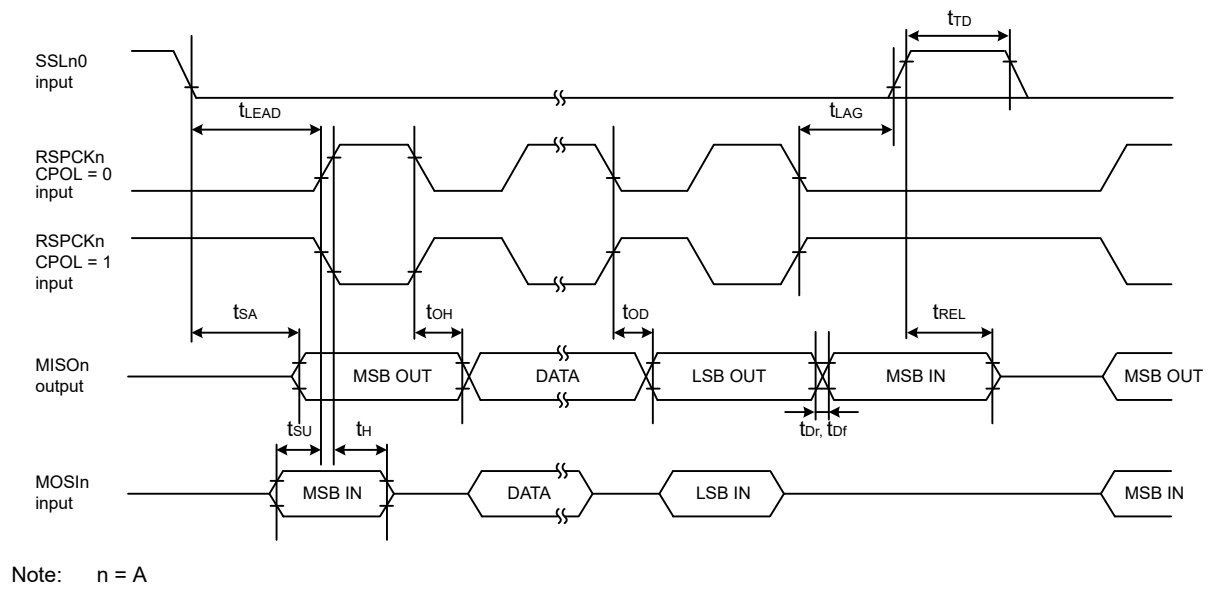

Figure 2.33 SPI timing (slave, CPHA = 0)

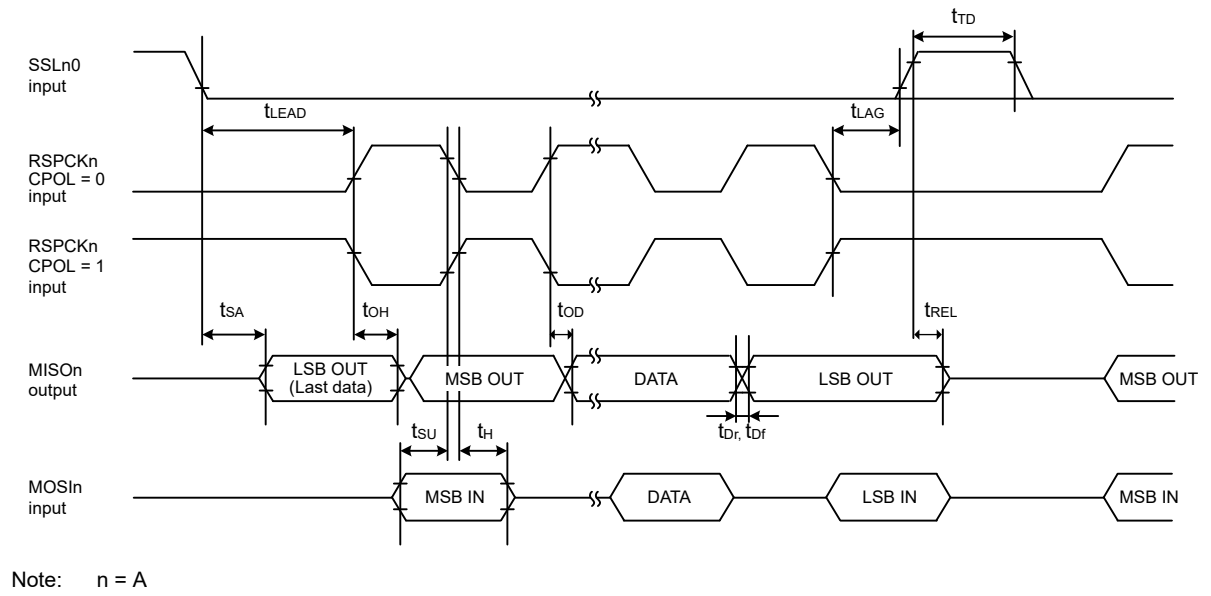

Figure 2.34 SPI timing (slave, CPHA = 1)

2.3.10 IIC Timing

Table 2.34 IIC timing

Conditions: VCC = AVCC0 = 2.7 to 5.5 V

Parameter		Symbol	Min*1	Max	Unit	Test conditions
IIC (standard mode, SMBus)	SCL input cycle time	t_{SCL}	6 (12) × t_{IICcyc} + 1300	—	ns	Figure 2.35
	SCL input high pulse width	t_{SCLH}	3 (6) × t_{IICcyc} + 300	—	ns	
	SCL input low pulse width	t_{SCLL}	3 (6) × t_{IICcyc} + 300	—	ns	
	SCL, SDA input rise time	t_{Sr}	—	1000	ns	
	SCL, SDA input fall time	t_{Sf}	—	300	ns	
	SCL, SDA input spike pulse removal time	t_{SP}	0	1 (4) × t_{IICcyc}	ns	
	SDA input bus free time (when wakeup function is disabled)	t_{BUF}	3 (6) × t_{IICcyc} + 300	—	ns	
	SDA input bus free time (when wakeup function is enabled)	t_{BUF}	3 (6) × t_{IICcyc} + 4 × t_{Pcyc} + 300	—	ns	
	START condition input hold time (when wakeup function is disabled)	t_{STAH}	t_{IICcyc} + 300	—	ns	
	START condition input hold time (when wakeup function is enabled)	t_{STAH}	1 (5) × t_{IICcyc} + t_{Pcyc} + 300	—	ns	
	Repeated START condition input setup time	t_{STAS}	1000	—	ns	
	STOP condition input setup time	t_{STOS}	1000	—	ns	
	Data input setup time	t_{SDAS}	t_{IICcyc} + 50	—	ns	
	Data input hold time	t_{SDAH}	0	—	ns	
	SCL, SDA capacitive load	C_b	—	400	pF	
IIC (Fast mode)	SCL input cycle time	t_{SCL}	6 (12) × t_{IICcyc} + 600	—	ns	Figure 2.35
	SCL input high pulse width	t_{SCLH}	3 (6) × t_{IICcyc} + 300	—	ns	
	SCL input low pulse width	t_{SCLL}	3 (6) × t_{IICcyc} + 300	—	ns	
	SCL, SDA input rise time	t_{Sr}	—	300	ns	
	SCL, SDA input fall time	t_{Sf}	—	300	ns	
	SCL, SDA input spike pulse removal time	t_{SP}	0	1 (4) × t_{IICcyc}	ns	
	SDA input bus free time (When wakeup function is disabled)	t_{BUF}	3 (6) × t_{IICcyc} + 300	—	ns	
	SDA input bus free time (When wakeup function is enabled)	t_{BUF}	3 (6) × t_{IICcyc} + 4 × t_{Pcyc}+ 300	—	ns	
	START condition input hold time (When wakeup function is disabled)	t_{STAH}	t_{IICcyc} + 300	—	ns	
	START condition input hold time (When wakeup function is enabled)	t_{STAH}	1 (5) × t_{IICcyc} + t_{Pcyc} + 300	—	ns	
	Repeated START condition input setup time	t_{STAS}	300	—	ns	
	STOP condition input setup time	t_{STOS}	300	—	ns	
	Data input setup time	t_{SDAS}	t_{IICcyc} + 50	—	ns	
	Data input hold time	t_{SDAH}	0	—	ns	
	SCL, SDA capacitive load	C_b	—	400	pF	

Note: t_{IICcyc}: IIC internal reference clock (IICφ) cycle, t_{Pcyc}: PCLKB cycle

Note 1. Values in parentheses apply when ICMR3.NF[1:0] is set to 11b while the digital filter is enabled with ICFER.NFE set to 1.

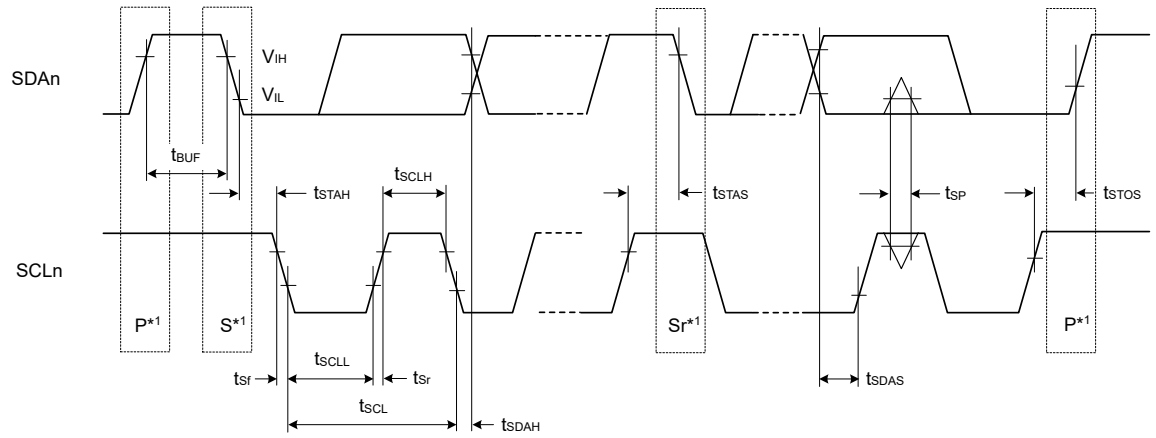

Note: n = 0
Note 1. S, P, and Sr indicate the following conditions:
S: Start condition
P: Stop condition
Sr: Restart condition

Figure 2.35 I²C bus interface input/output timing

2.3.11 CLKOUT Timing

Table 2.35 CLKOUT timing

Parameter			Symbol	Min	Max	Unit	Test conditions
CLKOUT	CLKOUT pin output cycle*1	2.7 V ≤ VCC ≤ 5.5 V	t_{Ccyc}	62.5	—	ns	Figure 2.36
		1.8 V ≤ VCC < 2.7 V		125	—		
		1.6 V ≤ VCC < 1.8 V		250	—		
	CLKOUT pin high pulse width*2	2.7 V ≤ VCC ≤ 5.5 V	t_{CH}	15	—	ns	
		1.8 V ≤ VCC < 2.7 V		30	—		
		1.6 V ≤ VCC < 1.8 V		150	—		
	CLKOUT pin low pulse width*2	2.7 V ≤ VCC ≤ 5.5 V	t_{CL}	15	—	ns	
		1.8 V ≤ VCC < 2.7 V		30	—		
		1.6 V ≤ VCC < 1.8 V		150	—		
	CLKOUT pin output rise time	2.7 V ≤ VCC ≤ 5.5 V	t_{Cr}	—	12	ns	
		1.8 V ≤ VCC < 2.7 V		—	25		
		1.6 V ≤ VCC < 1.8 V		—	50		
	CLKOUT pin output fall time	2.7 V ≤ VCC ≤ 5.5 V	t_{Cf}	—	12	ns	
		1.8 V ≤ VCC < 2.7 V		—	25		
		1.6 V ≤ VCC < 1.8 V		—	50		

Note 1. When the EXTAL external clock input or an oscillator is used with division by 1 (the CKOCR.CKOSEL[2:0] bits are 011b and the CKOCR.CKODIV[2:0] bits are 000b) to output from CLKOUT, specifications in Table 2.35 should be satisfied with 45% to 55% of input duty cycle.
Note 2. When MOCO is selected as the clock output source (the CKOCR.CKOSEL[2:0] bits are 001b), set the clock output division ratio to be divided by 2 (the CKOCR.CKODIV[2:0] bits are 001b).

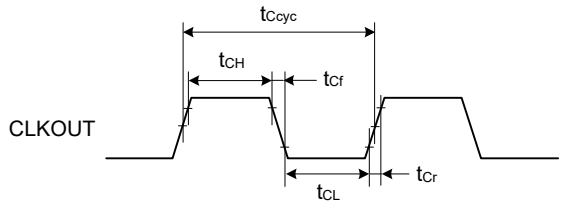

Test conditions: V_{OH} = VCC × 0.7, V_{OL} = VCC × 0.3, I_{OH} = -1.0 mA, I_{OL} = 1.0 mA, C = 30 pF

Figure 2.36 CLKOUT output timing

2.4 ADC12 Characteristics

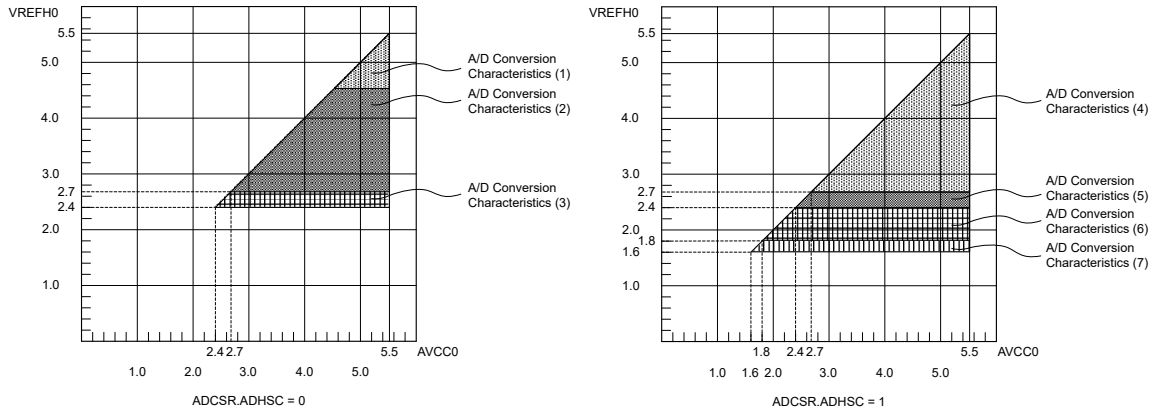

Figure 2.37 AVCC0 to VREFH0 voltage range

Table 2.36 A/D conversion characteristics (1) in high-speed A/D conversion mode (1 of 2)

Conditions: VCC = AVCC0 = VREFH0 = 4.5 to 5.5 V*5, VSS = AVSS0 = VREFL0 = 0 V
Reference voltage range applied to the VREFH0 and VREFL0.

Parameter		Min	Typ	Max	Unit	Test conditions
PCLKD (ADCLK) frequency		1	—	64	MHz	ADACSR.ADSAC = 0
				48	MHz	ADACSR.ADSAC = 1
Analog input capacitance*2	Cs	—	—	9*3	pF	High-precision channel
		—	—	10*3	pF	Normal-precision channel
Analog input resistance	Rs	—	—	1.3*3	kΩ	High-precision channel
		—	—	5.0*3	kΩ	Normal-precision channel
Analog input voltage range	Ain	0	—	VREFH0	V	—
Resolution		—	—	12	Bit	—

Table 2.36 A/D conversion characteristics (1) in high-speed A/D conversion mode (2 of 2)

Conditions: VCC = AVCC0 = VREFH0 = 4.5 to 5.5 V*5, VSS = AVSS0 = VREFL0 = 0 V
Reference voltage range applied to the VREFH0 and VREFL0.

Parameter		Min	Typ	Max	Unit	Test conditions
Conversion time*1 (Operation at PCLKD = 64 MHz)	Permissible signal source impedance Max. = 0.3 kΩ	0.70 (0.211)*4	—	—	μs	High-precision channel ADCSR.ADHSC = 0 ADSSTRn.SST[7:0] = 0x0D ADACSR.ADSAC = 0
		1.34 (0.852)*4	—	—	μs	Normal-precision channel ADCSR.ADHSC = 0 ADSSTRn.SST[7:0] = 0x36 ADACSR.ADSAC = 0
Conversion time*1 (Operation at PCLKD = 48 MHz)	Permissible signal source impedance Max. = 0.3 kΩ	0.67 (0.219)*4	—	—	μs	High-precision channel ADCSR.ADHSC = 0 ADSSTRn.SST[7:0] = 0x0A ADACSR.ADSAC = 1
		1.29 (0.844)*4	—	—	μs	Normal-precision channel ADCSR.ADHSC = 0 ADSSTRn.SST[7:0] = 0x28 ADACSR.ADSAC = 1
Offset error		—	±1.0	±4.5	LSB	High-precision channel
				±6.0	LSB	Other than specified
Full-scale error		—	±1.0	±4.5	LSB	High-precision channel
				±6.0	LSB	Other than specified
Quantization error		—	±0.5	—	LSB	—
Absolute accuracy		—	±2.5	±5.0	LSB	High-precision channel
				±8.0	LSB	Other than specified
DNL differential nonlinearity error		—	±1.0	—	LSB	—
INL integral nonlinearity error		—	±1.5	±3.0	LSB	—

Note: The characteristics apply when no pin functions other than 12-bit A/D converter input are used. Absolute accuracy does not include quantization errors. Offset error, full-scale error, DNL differential nonlinearity error, and INL integral nonlinearity error do not include quantization errors.
Note 1. The conversion time is the sum of the sampling time and the comparison time. The number of sampling states is indicated for the test conditions.
Note 2. Except for I/O input capacitance (Cin), see section 2.2.4. I/O V_{OH}, V_{OL}, and Other Characteristics.
Note 3. Reference data.
Note 4. ( ) lists sampling time.
Note 5. When VREFH0 < AVCC0, the MAX. values are as follows.
Absolute accuracy/Offset error/Full-scale error:
For voltage difference between AVCC0 and VREFH0, it should be added ±0.75 LSB/V to the Max spec.
INL integral non-linearity error:
For voltage difference between AVCC0 and VREFH0, it should be added ±0.2 LSB/V to the Max spec.

Table 2.37 A/D conversion characteristics (2) in high-speed A/D conversion mode (1 of 2)

Conditions: VCC = AVCC0 = VREFH0 = 2.7 to 5.5 V*5, VSS = AVSS0 = VREFL0 = 0 V
Reference voltage range applied to the VREFH0 and VREFL0.

Parameter		Min	Typ	Max	Unit	Test conditions
PCLKD (ADCLK) frequency		1	—	48	MHz	—
Analog input capacitance*2	Cs	—	—	9*3	pF	High-precision channel
		—	—	10*3	pF	Normal-precision channel
Analog input resistance	Rs	—	—	1.9*3	kΩ	High-precision channel
		—	—	6.0*3	kΩ	Normal-precision channel
Analog input voltage range	Ain	0	—	VREFH0	V	—
Resolution		—	—	12	Bit	—

Table 2.37 A/D conversion characteristics (2) in high-speed A/D conversion mode (2 of 2)

Conditions: VCC = AVCC0 = VREFH0 = 2.7 to 5.5 V*5, VSS = AVSS0 = VREFL0 = 0 V
Reference voltage range applied to the VREFH0 and VREFL0.

Parameter		Min	Typ	Max	Unit	Test conditions
Conversion time*1 (Operation at PCLKD = 48 MHz)	Permissible signal source impedance Max. = 0.3 kΩ	0.67 (0.219)*4	—	—	μs	High-precision channel ADCSR.ADHSC = 0 ADSSTRn.SST[7:0] = 0x0A ADACSR.ADSAC = 1
		1.29 (0.844)*4	—	—	μs	Normal-precision channel ADCSR.ADHSC = 0 ADSSTRn.SST[7:0] = 0x28 ADACSR.ADSAC = 1
Offset error		—	±1.0	±5.5	LSB	High-precision channel
				±7.0	LSB	Other than specified
Full-scale error		—	±1.0	±5.5	LSB	High-precision channel
				±7.0	LSB	Other than specified
Quantization error		—	±0.5	—	LSB	—
Absolute accuracy		—	±2.5	±6.0	LSB	High-precision channel
				±9.0	LSB	Other than specified
DNL differential nonlinearity error		—	±1.0	—	LSB	—
INL integral nonlinearity error		—	±1.5	±3.0	LSB	—

Note: The characteristics apply when no pin functions other than 12-bit A/D converter input are used. Absolute accuracy does not include quantization errors. Offset error, full-scale error, DNL differential nonlinearity error, and INL integral nonlinearity error do not include quantization errors.
Note 1. The conversion time is the sum of the sampling time and the comparison time. The number of sampling states is indicated for the test conditions.
Note 2. Except for I/O input capacitance (Cin), see section 2.2.4. I/O V_{OH}, V_{OL}, and Other Characteristics.
Note 3. Reference data.
Note 4. ( ) lists sampling time.
Note 5. When VREFH0 < AVCC0, the MAX. values are as follows.
Absolute accuracy/Offset error/Full-scale error:
For voltage difference between AVCC0 and VREFH0, it should be added ±0.75 LSB/V to the Max spec.
INL integral non-linearity error:
For voltage difference between AVCC0 and VREFH0, it should be added ±0.2 LSB/V to the Max spec.

Table 2.38 A/D conversion characteristics (3) in high-speed A/D conversion mode (1 of 2)

Conditions: VCC = AVCC0 = VREFH0 = 2.4 to 5.5 V*5, VSS = AVSS0 = VREFL0 = 0 V
Reference voltage range applied to the VREFH0 and VREFL0.

Parameter		Min		Max	Unit	Test conditions
PCLKD (ADCLK) frequency		1	—	32	MHz	—
Analog input capacitance*2	Cs	—	—	9*3	pF	High-precision channel
		—	—	10*3	pF	Normal-precision channel
Analog input resistance	Rs	—	—	2.2*3	kΩ	High-precision channel
		—	—	7.0*3	kΩ	Normal-precision channel
Analog input voltage range	Ain	0	—	VREFH0	V	—
Resolution		—	—	12	Bit	—
Conversion time*1 (Operation at PCLKD = 32 MHz)	Permissible signal source impedance Max. = 1.3 kΩ	1.00 (0.328)*4	—	—	μs	High-precision channel ADCSR.ADHSC = 0 ADSSTRn.SST[7:0] = 0x0A ADACSR.ADSAC = 1
		1.94 (1.266)*4	—	—	μs	Normal-precision channel ADCSR.ADHSC = 0 ADSSTRn.SST[7:0] = 0x28 ADACSR.ADSAC = 1

Table 2.38 A/D conversion characteristics (3) in high-speed A/D conversion mode (2 of 2)

Conditions: VCC = AVCC0 = VREFH0 = 2.4 to 5.5 V*5, VSS = AVSS0 = VREFL0 = 0 V
Reference voltage range applied to the VREFH0 and VREFL0.

Parameter	Min		Max	Unit	Test conditions
Offset error	—	±1.0	±5.5	LSB	High-precision channel
			±7.0	LSB	Other than specified
Full-scale error	—	±1.0	±5.5	LSB	High-precision channel
			±7.0	LSB	Other than specified
Quantization error	—	±0.5	—	LSB	—
Absolute accuracy	—	±2.50	±6.0	LSB	High-precision channel
			±9.0	LSB	Other than specified
DNL differential nonlinearity error	—	±1.0	—	LSB	—
INL integral nonlinearity error	—	±1.5	±3.0	LSB	—

Note: The characteristics apply when no pin functions other than 12-bit A/D converter input are used. Absolute accuracy does not include quantization errors. Offset error, full-scale error, DNL differential nonlinearity error, and INL integral nonlinearity error do not include quantization errors.
Note 1. The conversion time is the sum of the sampling time and the comparison time. The number of sampling states is indicated for the test conditions.
Note 2. Except for I/O input capacitance (Cin), see section 2.2.4. I/O V_{OH}, V_{OL}, and Other Characteristics.
Note 3. Reference data.
Note 4. ( ) lists sampling time.
Note 5. When VREFH0 < AVCC0, the MAX. values are as follows.
Absolute accuracy/Offset error/Full-scale error:
For voltage difference between AVCC0 and VREFH0, it should be added ±0.75 LSB/V to the Max spec.
INL integral non-linearity error:
For voltage difference between AVCC0 and VREFH0, it should be added ±0.2 LSB/V to the Max spec.

Table 2.39 A/D conversion characteristics (4) in low-power A/D conversion mode (1 of 2)

Conditions: VCC = AVCC0 = VREFH0 = 2.7 to 5.5 V*5, VSS = AVSS0 = VREFL0 = 0 V
Reference voltage range applied to the VREFH0 and VREFL0.

Parameter		Min	Typ	Max	Unit	Test conditions
PCLKD (ADCLK) frequency		1	—	24	MHz	—
Analog input capacitance*2	Cs	—	—	9*3	pF	High-precision channel
		—	—	10*3	pF	Normal-precision channel
Analog input resistance	Rs	—	—	1.9*3	kΩ	High-precision channel
		—	—	6*3	kΩ	Normal-precision channel
Analog input voltage range	Ain	0	—	VREFH0	V	—
Resolution		—	—	12	Bit	—
Conversion time*1 (Operation at PCLKD = 24 MHz)	Permissible signal source impedance Max. = 1.1 kΩ	1.58 (0.438)*4	—	—	μs	High-precision channel ADCSR.ADHSC = 1 ADSSTRn.SST[7:0] = 0x0A ADACSR.ADSAC = 1
		2.0 (0.854)*4	—	—	μs	Normal-precision channel ADCSR.ADHSC = 1 ADSSTRn.SST[7:0] = 0x14 ADACSR.ADSAC = 1
Offset error		—	±1.25	±6.0	LSB	High-precision channel
				±7.5	LSB	Other than specified
Full-scale error		—	±1.25	±6.0	LSB	High-precision channel
				±7.5	LSB	Other than specified
Quantization error		—	±0.5	—	LSB	—

Table 2.39 A/D conversion characteristics (4) in low-power A/D conversion mode (2 of 2)

Conditions: VCC = AVCC0 = VREFH0 = 2.7 to 5.5 V*5, VSS = AVSS0 = VREFL0 = 0 V
Reference voltage range applied to the VREFH0 and VREFL0.

Parameter	Min	Typ	Max	Unit	Test conditions
Absolute accuracy	—	±3.25	±7.0	LSB	High-precision channel
			±10.0	LSB	Other than specified
DNL differential nonlinearity error	—	±1.5	—	LSB	—
INL integral nonlinearity error	—	±1.75	±4.0	LSB	—

Note: The characteristics apply when no pin functions other than 12-bit A/D converter input are used. Absolute accuracy does not include quantization errors. Offset error, full-scale error, DNL differential nonlinearity error, and INL integral nonlinearity error do not include quantization errors.
Note 1. The conversion time is the sum of the sampling time and the comparison time. The number of sampling states is indicated for the test conditions.
Note 2. Except for I/O input capacitance (Cin), see section 2.2.4. I/O V_{OH}, V_{OL}, and Other Characteristics.
Note 3. Reference data.
Note 4. ( ) lists sampling time.
Note 5. When VREFH0 < AVCC0, the MAX. values are as follows.
Absolute accuracy/Offset error/Full-scale error:
For voltage difference between AVCC0 and VREFH0, it should be added ±0.75 LSB/V to the Max spec.
INL integral non-linearity error:
For voltage difference between AVCC0 and VREFH0, it should be added ±0.2 LSB/V to the Max spec.

Table 2.40 A/D conversion characteristics (5) in low-power A/D conversion mode

Conditions: VCC = AVCC0 = VREFH0 = 2.4 to 5.5 V*5, VSS = AVSS0 = VREFL0 = 0 V
Reference voltage range applied to the VREFH0 and VREFL0.

Parameter		Min	Typ	Max	Unit	Test conditions
PCLKD (ADCLK) frequency		1	—	16	MHz	—
Analog input capacitance*2	Cs	—	—	9*3	pF	High-precision channel
		—	—	10*3	pF	Normal-precision channel
Analog input resistance	Rs	—	—	2.2*3	kΩ	High-precision channel
		—	—	7*3	kΩ	Normal-precision channel
Analog input voltage range	Ain	0	—	VREFH0	V	—
Resolution		—	—	12	Bit	—
Conversion time*1 (Operation at PCLKD = 16 MHz)	Permissible signal source impedance Max. = 2.2 kΩ	2.38 (0.656)*4	—	—	μs	High-precision channel ADCSR.ADHSC = 1 ADSSTRn.SST[7:0] = 0x0A ADACSR.ADSAC = 1
		3.0 (1.281)*4	—	—	μs	Normal-precision channel ADCSR.ADHSC = 1 ADSSTRn.SST[7:0] = 0x14 ADACSR.ADSAC = 1
Offset error		—	±1.25	±6.0	LSB	High-precision channel
				±7.5	LSB	Other than specified
Full-scale error		—	±1.25	±6.0	LSB	High-precision channel
				±7.5	LSB	Other than specified
Quantization error		—	±0.5	—	LSB	—
Absolute accuracy		—	±3.25	±7.0	LSB	High-precision channel
				±10.0	LSB	Other than specified
DNL differential nonlinearity error		—	±1.5	—	LSB	—
INL integral nonlinearity error		—	±1.75	±4.0	LSB	—

Note: The characteristics apply when no pin functions other than 12-bit A/D converter input are used. Absolute accuracy does not include quantization errors. Offset error, full-scale error, DNL differential nonlinearity error, and INL integral nonlinearity error do not include quantization errors.

Note 1. The conversion time is the sum of the sampling time and the comparison time. The number of sampling states is indicated for the test conditions.
Note 2. Except for I/O input capacitance (Cin), see section 2.2.4. I/O V_{OH}, V_{OL}, and Other Characteristics.
Note 3. Reference data.
Note 4. ( ) lists sampling time.
Note 5. When VREFH0 < AVCC0, the MAX. values are as follows.
Absolute accuracy/Offset error/Full-scale error:
For voltage difference between AVCC0 and VREFH0, it should be added ±0.75 LSB/V to the Max spec.
INL integral non-linearity error:
For voltage difference between AVCC0 and VREFH0, it should be added ±0.2 LSB/V to the Max spec.

Table 2.41 A/D conversion characteristics (6) in low-power A/D conversion mode

Conditions: VCC = AVCC0 = VREFH0 = 1.8 to 5.5 V*5, VSS = AVSS0 = VREFL0 = 0 V
Reference voltage range applied to the VREFH0 and VREFL0.

Parameter		Min	Typ	Max	Unit	Test conditions
PCLKD (ADCLK) frequency		1	—	8	MHz	—
Analog input capacitance*2	Cs	—	—	9*3	pF	High-precision channel
		—	—	10*3	pF	Normal-precision channel
Analog input resistance	Rs	—	—	6*3	kΩ	High-precision channel
		—	—	14*3	kΩ	Normal-precision channel
Analog input voltage range	Ain	0	—	VREFH0	V	—
Resolution		—	—	12	Bit	—
Conversion time*1 (Operation at PCLKD = 8 MHz)	Permissible signal source impedance Max. = 5 kΩ	4.75 (1.313)*4	—	—	μs	High-precision channel ADCSR.ADHSC = 1 ADSSTRn.SST[7:0] = 0x0A ADACSR.ADSAC = 1
		6.0 (2.563)*4	—	—	μs	Normal-precision channel ADCSR.ADHSC = 1 ADSSTRn.SST[7:0] = 0x14 ADACSR.ADSAC = 1
Offset error		—	±1.25	±7.5	LSB	High-precision channel
				±10.0	LSB	Other than specified
Full-scale error		—	±1.5	±7.5	LSB	High-precision channel
				±10.0	LSB	Other than specified
Quantization error		—	±0.5	—	LSB	—
Absolute accuracy		—	±3.75	±9.5	LSB	High-precision channel
				±13.5	LSB	Other than specified
DNL differential nonlinearity error		—	±2.0	—	LSB	—
INL integral nonlinearity error		—	±2.25	±4.5	LSB	—

Note: The characteristics apply when no pin functions other than 12-bit A/D converter input are used. Absolute accuracy does not include quantization errors. Offset error, full-scale error, DNL differential nonlinearity error, and INL integral nonlinearity error do not include quantization errors.
Note 1. The conversion time is the sum of the sampling time and the comparison time. The number of sampling states is indicated for the test conditions.
Note 2. Except for I/O input capacitance (Cin), see section 2.2.4. I/O V_{OH}, V_{OL}, and Other Characteristics.
Note 3. Reference data.
Note 4. ( ) lists sampling time.
Note 5. When VREFH0 < AVCC0, the MAX. values are as follows.
Absolute accuracy/Offset error/Full-scale error:
For voltage difference between AVCC0 and VREFH0, it should be added ±0.75 LSB/V to the Max spec.
INL integral non-linearity error:
For voltage difference between AVCC0 and VREFH0, it should be added ±0.2 LSB/V to the Max spec.

Table 2.42 A/D conversion characteristics (7) in low-power A/D conversion mode

Conditions: VCC = AVCC0 = VREFH0 = 1.6 to 5.5 V*5, VSS = AVSS0 = VREFL0 = 0 V
Reference voltage range applied to the VREFH0 and VREFL0.

Parameter		Min	Typ	Max	Unit	Test conditions
PCLKD (ADCLK) frequency		1	—	4	MHz	—
Analog input capacitance*2	Cs	—	—	9*3	pF	High-precision channel
		—	—	10*3	pF	Normal-precision channel
Analog input resistance	Rs	—	—	12*3	kΩ	High-precision channel
		—	—	28*3	kΩ	Normal-precision channel
Analog input voltage range	Ain	0	—	VREFH0	V	—
Resolution		—	—	12	Bit	—
Conversion time*1 (Operation at PCLKD = 4 MHz)	Permissible signal source impedance Max. = 9.9 kΩ	9.5 (2.625)*4	—	—	μs	High-precision channel ADCSR.ADHSC = 1 ADSSTRn.SST[7:0] = 0x0A ADACSR.ADSAC = 1
		12.0 (5.125)*4	—	—	μs	Normal-precision channel ADCSR.ADHSC = 1 ADSSTRn.SST[7:0] = 0x14 ADACSR.ADSAC = 1
Offset error		—	±1.25	±7.5	LSB	High-precision channel
				±10.0	LSB	Other than specified
Full-scale error		—	±1.5	±7.5	LSB	High-precision channel
				±10.0	LSB	Other than specified
Quantization error		—	±0.5	—	LSB	—
Absolute accuracy		—	±3.75	±9.5	LSB	High-precision channel
				±13.5	LSB	Other than specified
DNL differential nonlinearity error		—	±2.0	—	LSB	—
INL integral nonlinearity error		—	±2.25	±4.5	LSB	—

Note: The characteristics apply when no pin functions other than 12-bit A/D converter input are used. Absolute accuracy does not include quantization errors. Offset error, full-scale error, DNL differential nonlinearity error, and INL integral nonlinearity error do not include quantization errors.

Note 1. The conversion time is the sum of the sampling time and the comparison time. The number of sampling states is indicated for the test conditions.

Note 2. Except for I/O input capacitance (Cin), see section 2.2.4. I/O V_{OH}, V_{OL}, and Other Characteristics.

Note 3. Reference data.

Note 4. ( ) lists sampling time.

Note 5. When VREFH0 < AVCC0, the MAX. values are as follows.
Absolute accuracy/Offset error/Full-scale error:
For voltage difference between AVCC0 and VREFH0, it should be added ±0.75 LSB/V to the Max spec.
INL integral non-linearity error:
For voltage difference between AVCC0 and VREFH0, it should be added ±0.2 LSB/V to the Max spec.

Figure 2.38 shows the equivalent circuit for analog input.

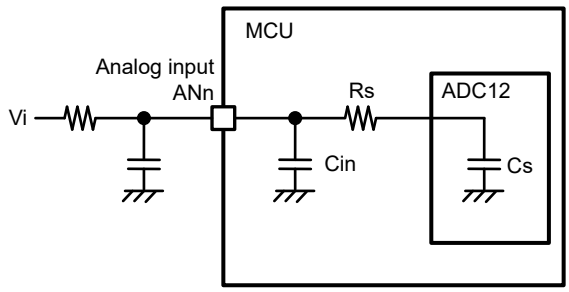

Note: Terminal leakage current is not shown in this figure.

Figure 2.38 Equivalent circuit for analog input

Table 2.43 12-bit A/D converter channel classification

Classification	Channel	Conditions	Remarks
High-precision channel	AN000 to AN002, AN005 to AN010	AVCC0 = 1.6 to 5.5 V	Pins AN000 to AN002, AN005 to AN010 cannot be used as general I/O when the A/D converter is in use.
Normal-precision channel	AN019 to AN022		
Internal reference voltage input channel	Internal reference voltage	AVCC0 = 1.8 to 5.5 V	—
Temperature sensor input channel	Temperature sensor output	AVCC0 = 1.8 to 5.5 V	—

Table 2.44 A/D internal reference voltage characteristics

Conditions: VCC = AVCC0 = VREFH0 = 1.8 to 5.5 V*1

Parameter	Min	Typ	Max	Unit	Test conditions
Internal reference voltage input channel*2	1.42	1.48	1.54	V	—
PCLKD (ADCLK) frequency*3	1	—	2	MHz	—
Sampling time*4	5.0	—	—	μs	—

Note 1. The internal reference voltage cannot be selected for input channels when AVCC0 < 1.8 V.
Note 2. The 12-bit A/D internal reference voltage indicates the voltage when the internal reference voltage is input to the 12-bit A/D converter.
Note 3. When the internal reference voltage is selected as the high-potential reference voltage.
Note 4. When the internal reference voltage is converted.

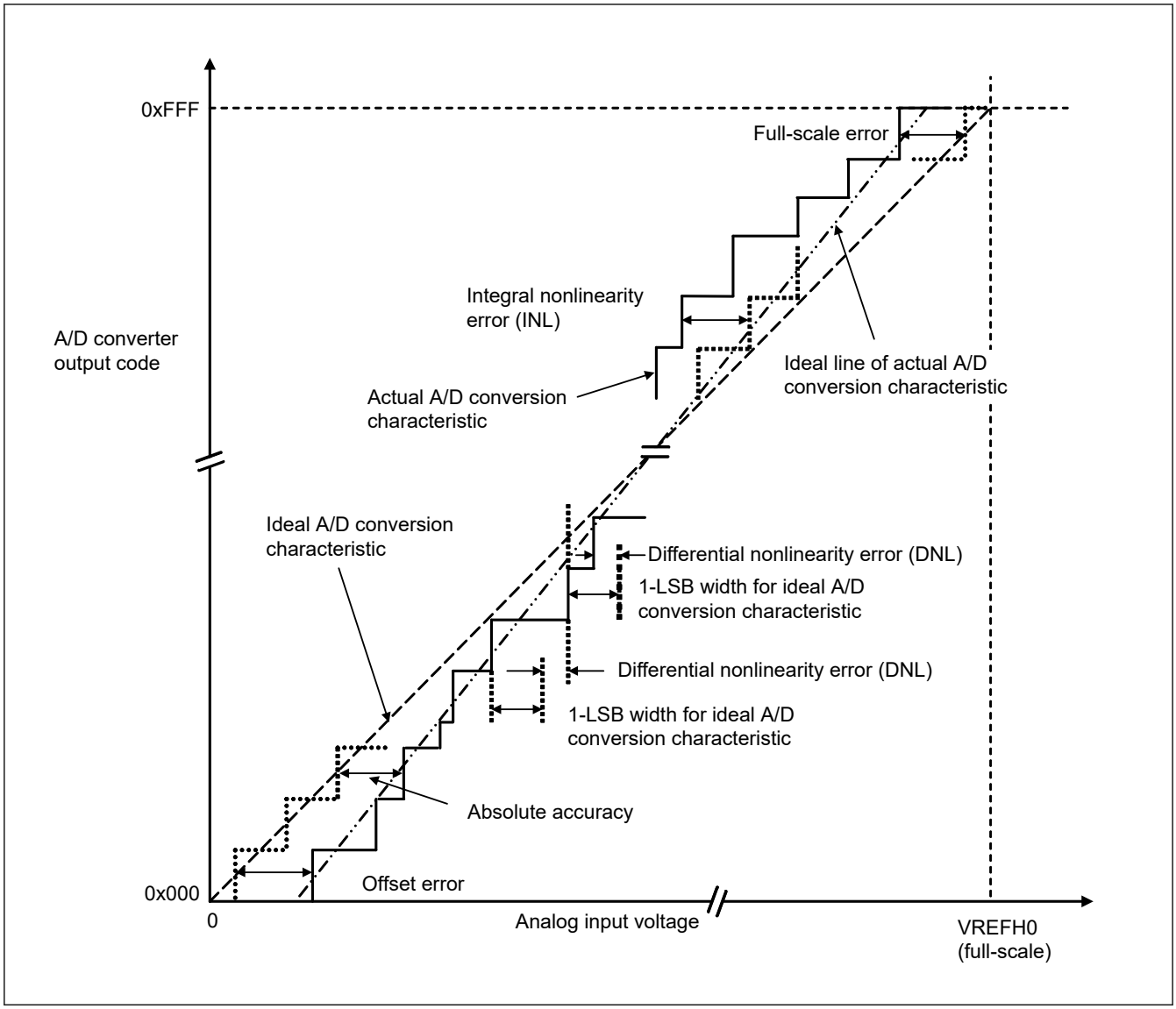

Figure 2.39 Illustration of 12-bit A/D converter characteristic terms

Absolute accuracy

Absolute accuracy is the difference between output code based on the theoretical A/D conversion characteristics, and the actual A/D conversion result. When measuring absolute accuracy, the voltage at the midpoint of the width of the analog input voltage (1-LSB width), which can meet the expectation of outputting an equal code based on the theoretical A/D conversion characteristics, is used as the analog input voltage. For example, if 12-bit resolution is used and the reference voltage VREFH0 = 3.072 V, then 1-LSB width becomes 0.75 mV, and 0 mV, 0.75 mV, and 1.5 mV are used as the analog input voltages. If analog input voltage is 6 mV, an absolute accuracy of ±5 LSB means that the actual A/D conversion result is in the range of 0x003 to 0x00D, though an output code of 0x008 can be expected from the theoretical A/D conversion characteristics.

Integral nonlinearity error (INL)

Integral nonlinearity error is the maximum deviation between the ideal line when the measured offset and full-scale errors are zeroed, and the actual output code.

Differential nonlinearity error (DNL)

Differential nonlinearity error is the difference between 1-LSB width based on the ideal A/D conversion characteristics and the width of the actual output code.

Offset error

Offset error is the difference between the transition point of the ideal first output code and the actual first output code.

Full-scale error

Full-scale error is the difference between the transition point of the ideal last output code and the actual last output code.

2.5 TSN Characteristics

Table 2.45 TSN characteristics

Conditions: VCC = AVCC0 = 1.8 to 5.5 V

Parameter	Symbol	Min	Typ	Max	Unit	Test conditions
Relative accuracy	—	—	± 1.5	—	°C	2.4 V or above
		—	± 2.0	—	°C	Below 2.4 V
Temperature slope	—	—	-3.3	—	mV/°C	—
Output voltage (at 25°C)	—	—	1.05	—	V	VCC = 3.3 V
Temperature sensor start time	t_{START}	—	—	5	μs	—
Sampling time	—	5	—	—	μs	

2.6 OSC Stop Detect Characteristics

Table 2.46 Oscillation stop detection circuit characteristics

Parameter	Symbol	Min	Typ	Max	Unit	Test conditions
Detection time	t_{dr}	—	—	1	ms	Figure 2.40

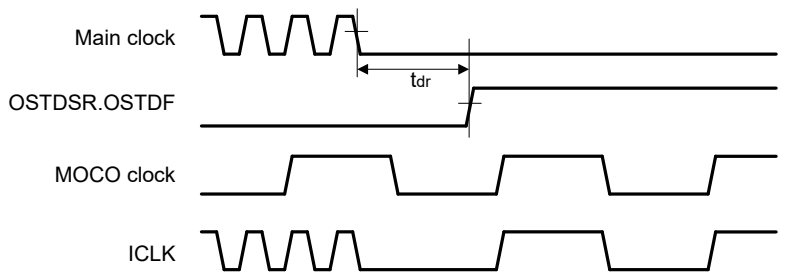

Figure 2.40 Oscillation stop detection timing

2.7 POR and LVD Characteristics

Table 2.47 Power-on reset circuit and voltage detection circuit characteristics (1) (1 of 2)

Parameter			Symbol	Min	Typ	Max	Unit	Test Conditions
Voltage detection level*1	Power-on reset (POR)	When power supply rise	V_{POR}	1.47	1.51	1.55	V	Figure 2.41
		When power supply fall	V_{PDR}	1.46	1.50	1.54		Figure 2.42
	Voltage detection circuit (LVD0)*2	When power supply rise	V_{det0_0}	3.74	3.91	4.06	V	Figure 2.43 At falling edge VCC
		When power supply fall		3.68	3.85	4.00		
		When power supply rise	V_{det0_1}	2.73	2.9	3.01		
		When power supply fall		2.68	2.85	2.96		
		When power supply rise	V_{det0_2}	2.44	2.59	2.70		
		When power supply fall		2.38	2.53	2.64		
		When power supply rise	V_{det0_3}	1.83	1.95	2.07		
		When power supply fall		1.78	1.90	2.02		
		When power supply rise	V_{det0_4}	1.66	1.75	1.88		
		When power supply fall		1.60	1.69	1.82		
Voltage detection level*1	Voltage detection circuit (LVD1)*3	When power supply rise	V_{det1_0}	4.23	4.39	4.55	V	Figure 2.44 At falling edge VCC
		When power supply fall		4.13	4.29	4.45		
		When power supply rise	V_{det1_1}	4.07	4.25	4.39		
		When power supply fall		3.98	4.16	4.30		
		When power supply rise	V_{det1_2}	3.97	4.14	4.29		
		When power supply fall		3.86	4.03	4.18		
		When power supply rise	V_{det1_3}	3.74	3.92	4.06		
		When power supply fall		3.68	3.86	4.00		
		When power supply rise	V_{det1_4}	3.05	3.17	3.29		
		When power supply fall		2.98	3.10	3.22		
		When power supply rise	V_{det1_5}	2.95	3.06	3.17		
		When power supply fall		2.89	3.00	3.11		
		When power supply rise	V_{det1_6}	2.86	2.97	3.08		
		When power supply fall		2.79	2.90	3.01		
		When power supply rise	V_{det1_7}	2.74	2.85	2.96		
		When power supply fall		2.68	2.79	2.90		

Table 2.47 Power-on reset circuit and voltage detection circuit characteristics (1) (2 of 2)

Parameter			Symbol	Min	Typ	Max	Unit	Test Conditions
Voltage detection level*1	Voltage detection circuit (LVD1)*3	When power supply rise	V_{det1_8}	2.63	2.75	2.85	V	Figure 2.44 At falling edge VCC
		When power supply fall		2.58	2.68	2.78		
		When power supply rise	V_{det1_9}	2.54	2.64	2.75		
		When power supply fall		2.48	2.58	2.68		
		When power supply rise	V_{det1_A}	2.43	2.53	2.63		
		When power supply fall		2.38	2.48	2.58		
		When power supply rise	V_{det1_B}	2.16	2.26	2.36		
		When power supply fall		2.10	2.20	2.30		
		When power supply rise	V_{det1_C}	1.88	2	2.09		
		When power supply fall		1.84	1.96	2.05		
		When power supply rise	V_{det1_D}	1.78	1.9	1.99		
		When power supply fall		1.74	1.86	1.95		
		When power supply rise	V_{det1_E}	1.67	1.79	1.88		
		When power supply fall		1.63	1.75	1.84		
		When power supply rise	V_{det1_F}	1.65	1.7	1.78		
		When power supply fall		1.60	1.65	1.73		
Voltage detection level*1	Voltage detection circuit (LVD2)*4	When power supply rise	V_{det2_0}	4.20	4.40	4.57	V	Figure 2.45 At falling edge VCC
		When power supply fall		4.11	4.31	4.48		
		When power supply rise	V_{det2_1}	4.05	4.25	4.42		
		When power supply fall		3.97	4.17	4.34		
		When power supply rise	V_{det2_2}	3.91	4.11	4.28		
		When power supply fall		3.83	4.03	4.20		
		When power supply rise	V_{det2_3}	3.71	3.91	4.08		
		When power supply fall		3.64	3.84	4.01		

Note 1. These characteristics apply when noise is not superimposed on the power supply. When a setting causes this voltage detection level to overlap with that of the voltage detection circuit, it cannot be specified whether LVD1 or LVD2 is used for voltage detection.
Note 2. # in the symbol $V_{det0_\#}$ denotes the value of the OFS1.VDSEL0[2:0] bits.
Note 3. # in the symbol $V_{det1_\#}$ denotes the value of the LVDLVLR.LVD1LVL[4:0] bits.
Note 4. # in the symbol $V_{det2_\#}$ denotes the value of the LVDLVLR.LVD2LVL[2:0] bits.

Table 2.48 Power-on reset circuit and voltage detection circuit characteristics (2) (1 of 2)

Parameter		Symbol	Min	Typ	Max	Unit	Test Conditions
Wait time after power-on reset cancellation	LVD0: enable	t_{POR}	—	4.3	—	ms	—
	LVD0: disable	t_{POR}	—	3.7	—	ms	—
Wait time after voltage monitor 0, 1, 2 reset cancellation	LVD0: enable*1	$t_{LVD0,1,2}$	—	1.4	—	ms	—
	LVD0: disable*2	$t_{LVD1,2}$	—	0.7	—	ms	—
Power-on reset response delay time*3		t_{det}	—	—	500	μs	Figure 2.41, Figure 2.42
LVD0 response delay time*3		t_{det}	—	—	500	μs	Figure 2.43
LVD1 response delay time*3		t_{det}	—	—	350	μs	Figure 2.44
LVD2 response delay time*3		t_{det}	—	—	600	μs	Figure 2.45
Minimum VCC downtime		t_{VOFF}	500	—	—	μs	Figure 2.41, VCC = 1.0 V or above
Power-on reset enable time		$t_{W\ (POR)}$	1	—	—	ms	Figure 2.42, VCC = below 1.0 V

Table 2.48 Power-on reset circuit and voltage detection circuit characteristics (2) (2 of 2)

Parameter	Symbol	Min	Typ	Max	Unit	Test Conditions
LVD1 operation stabilization time (after LVD1 is enabled)	$T_{d\ (E-A)}$	—	—	300	μs	Figure 2.44
LVD2 operation stabilization time (after LVD2 is enabled)	$T_{d\ (E-A)}$	—	—	1200	μs	Figure 2.45
Hysteresis width (POR)	V_{PORH}	—	10	—	mV	—
Hysteresis width (LVD0, LVD1 and LVD2)	V_{LVH}	—	60	—	mV	LVD0 selected
		—	110	—		V_{det1_0} to V_{det1_2} selected
		—	70	—		V_{det1_3} to V_{det1_9} selected
		—	60	—		V_{det1_A} to V_{det1_B} selected
		—	50	—		V_{det1_C} to V_{det1_F} selected
		—	90	—		LVD2 selected

Note 1. When OFS1.LVDAS = 0.
Note 2. When OFS1.LVDAS = 1.
Note 3. The minimum VCC downtime indicates the time when VCC is below the minimum value of voltage detection levels V_{POR}, V_{det0}, V_{det1}, and V_{det2} for the POR/LVD.

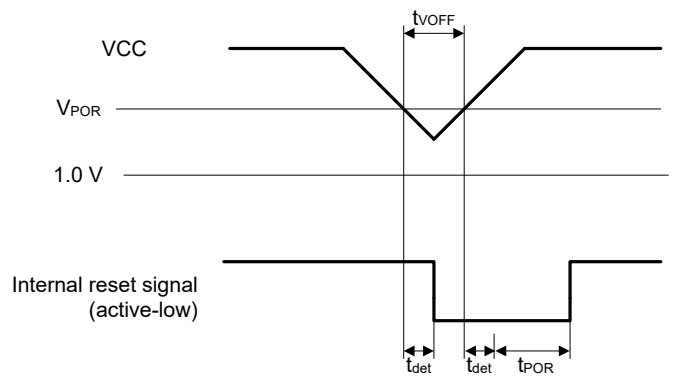

Figure 2.41 Voltage detection reset timing

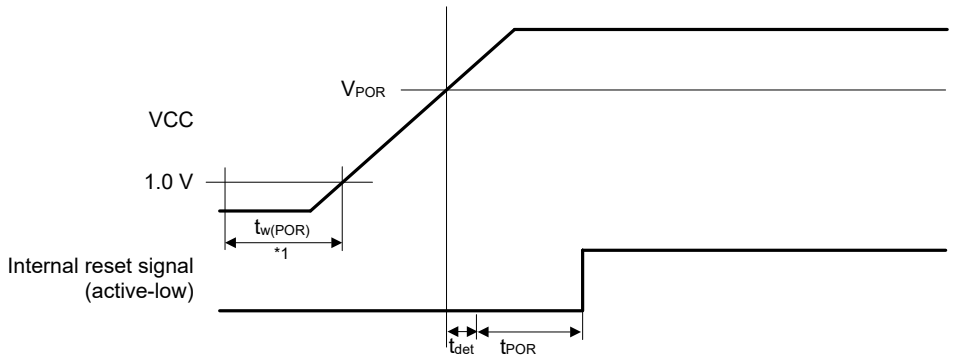

Note 1. $t_{w(POR)}$ is the time required for a power-on reset to be enabled while the external power VCC is being held below the valid voltage (1.0 V).
When VCC turns on, maintain $t_{w(POR)}$ for 1.0 ms or more.

Figure 2.42 Power-on reset timing

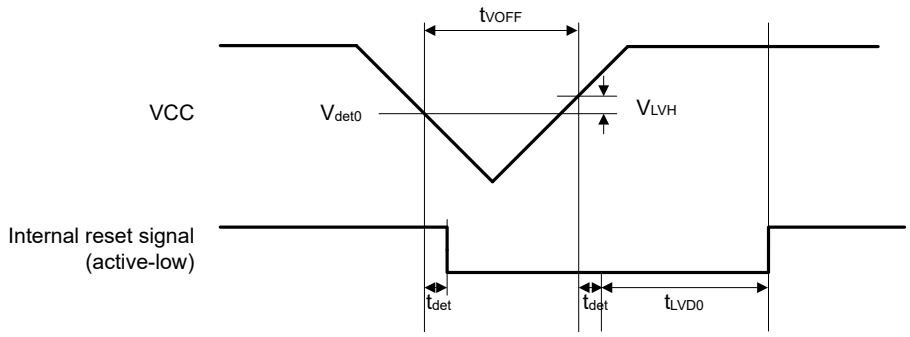

Figure 2.43 Voltage detection circuit timing (V_{det0})

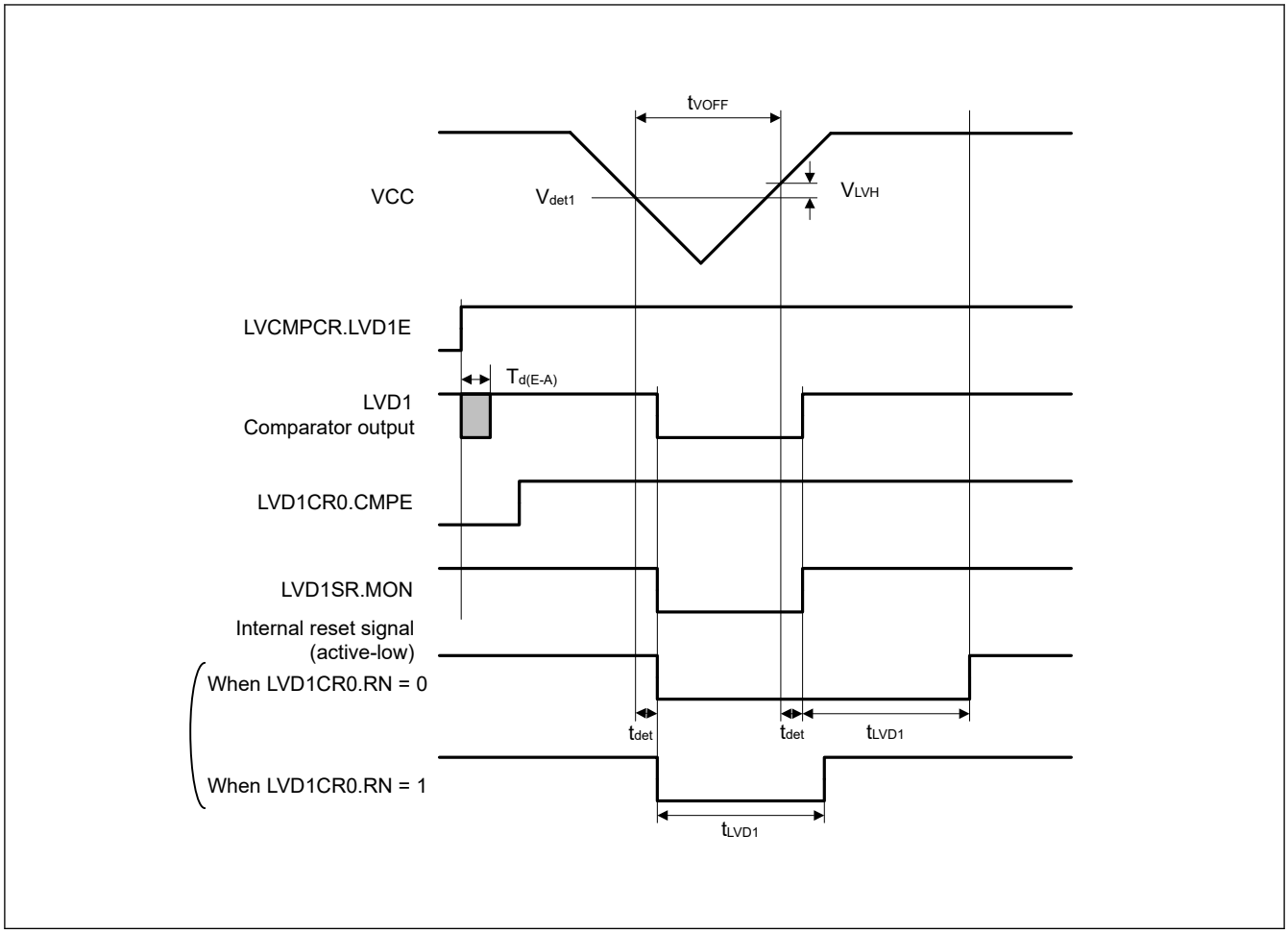

Figure 2.44 Voltage detection circuit timing (V_{det1})

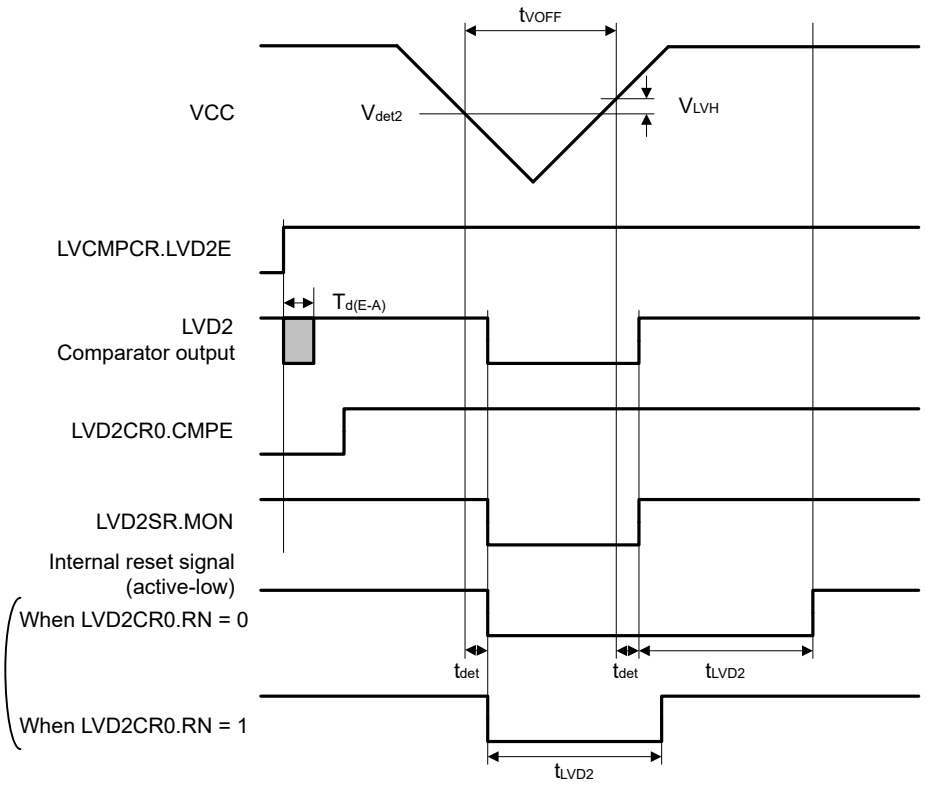

Figure 2.45 Voltage detection circuit timing (V_{det2})

2.8 Flash Memory Characteristics

2.8.1 Code Flash Memory Characteristics

Table 2.49 Code flash characteristics (1)

Parameter		Symbol	Min	Typ	Max	Unit	Conditions
Reprogramming/erasure cycle*1		N_{PEC}	10000	—	—	Times	—
Data hold time	After 1000 times N_{PEC}	t_{DRP}	20*2 *3	—	—	Year	T_a = +85°C T_a = +105°C
	After 10000 times N_{PEC}		10*2 *3	—	—	Year	

Note 1. The reprogram/erase cycle is the number of erasures for each block. When the reprogram/erase cycle is n times (n = 10,000), erasing can be performed n times for each block. For instance, when 4-byte programming is performed 512 times for different addresses in 2-KB blocks, and then the entire block is erased, the reprogram/erase cycle is counted as one. However, programming the same address for several times as one erasure is not enabled (overwriting is prohibited).
Note 2. Characteristic when using the flash memory programmer and the self-programming library provided by Renesas Electronics.
Note 3. This result is obtained from reliability testing.

Table 2.50 Code flash characteristics (2) (1 of 2)

High-speed operating mode
Conditions: VCC = AVCC0 = 1.8 to 5.5 V

Parameter		Symbol	ICLK = 1 MHz			ICLK = 48 MHz			Unit
			Min	Typ	Max	Min	Typ	Max	
Programming time	4-byte	t_{P4}	—	86	732	—	34	321	μs
Erasure time	2-KB	t_{E2K}	—	12.5	355	—	5.6	215	ms

Table 2.50 Code flash characteristics (2) (2 of 2)

High-speed operating mode
Conditions: VCC = AVCC0 = 1.8 to 5.5 V

Parameter		Symbol	ICLK = 1 MHz			ICLK = 48 MHz			Unit
			Min	Typ	Max	Min	Typ	Max	
Blank check time	4-byte	t_{BC4}	—	—	46.5	—	—	8.3	μs
	2-KB	t_{BC2K}	—	—	3681	—	—	240	μs
Erase suspended time		t_{SED}	—	—	22.3	—	—	10.5	μs
Access window information program Start-up area selection and security setting time		t_{AWSSAS}	—	21.2	570	—	11.4	423	ms
OCD/serial programmer ID setting time*1		t_{OSIS}	—	84.7	2280	—	45.3	1690	ms
Flash memory mode transition wait time 1		t_{DIS}	2	—	—	2	—	—	μs
Flash memory mode transition wait time 2		t_{MS}	15	—	—	15	—	—	μs

Note: Does not include the time until each operation of the flash memory is started after instructions are executed by software.
Note: The lower-limit frequency of ICLK is 1 MHz during programming or erasing the flash memory. When using ICLK at below 4 MHz, the frequency can be set to 1 MHz, 2 MHz, or 3 MHz. A non-integer frequency such as 1.5 MHz cannot be set.
Note: The frequency accuracy of ICLK must be ± 1.0% during programming or erasing the flash memory. Confirm the frequency accuracy of the clock source.
Note 1. Total time of four commands.

Table 2.51 Code flash characteristics (3)

Middle-speed operating mode
Conditions: VCC = AVCC0 = 1.8 to 5.5 V

Parameter		Symbol	ICLK = 1 MHz			ICLK = 24 MHz*2			Unit
			Min	Typ	Max	Min	Typ	Max	
Programming time	4-byte	t_{P4}	—	86	732	—	39	356	μs
Erasure time	2-KB	t_{E2K}	—	12.5	355	—	6.2	227	ms
Blank check time	4-byte	t_{BC4}	—	—	46.5	—	—	11.3	μs
	2-KB	t_{BC2K}	—	—	3681	—	—	534	μs
Erase suspended time		t_{SED}	—	—	22.3	—	—	11.7	μs
Access window information program Start-up area selection and security setting time		t_{AWSSAS}	—	21.2	570	—	12.2	435	ms
OCD/serial programmer ID setting time*1		t_{OSIS}	—	84.7	2280	—	48.7	1740	ms
Flash memory mode transition wait time 1		t_{DIS}	2	—	—	2	—	—	μs
Flash memory mode transition wait time 2		t_{MS}	15	—	—	15	—	—	μs

Note: Does not include the time until each operation of the flash memory is started after instructions are executed by software.
Note: The lower-limit frequency of ICLK is 1 MHz during programming or erasing the flash memory. When using ICLK at below 4 MHz, the frequency can be set to 1 MHz, 2 MHz, or 3 MHz. A non-integer frequency such as 1.5 MHz cannot be set.
Note: The frequency accuracy of ICLK must be ± 1.0% during programming or erasing the flash memory. Confirm the frequency accuracy of the clock source.
Note 1. Total time of four commands.
Note 2. When 1.8 V ≤ VCC = AVCC0 ≤ 5.5 V

Table 2.52 Code flash characteristics (4)

Low-speed operating mode
Conditions: VCC = AVCC0 = 1.6 to 5.5 V

Parameter		Symbol	ICLK = 1 MHz			ICLK = 2 MHz			Unit
			Min	Typ	Max	Min	Typ	Max	
Programming time	4-byte	t_{P4}	—	86	732	—	57	502	μs
Erasure time	2-KB	t_{E2K}	—	12.5	355	—	8.8	280	ms
Blank check time	4-byte	t_{BC4}	—	—	46.5	—	—	23.3	μs
	2-KB	t_{BC2K}	—	—	3681	—	—	1841	μs
Erase suspended time		t_{SED}	—	—	22.3	—	—	16.2	μs
Access window information program Start-up area selection and security setting time		t_{AWSSAS}	—	21.2	570	—	15.9	491	ms
OCD/serial programmer ID setting time*1		t_{OSIS}	—	84.7	2280	—	63.5	1964	ms
Flash memory mode transition wait time 1		t_{DIS}	2	—	—	2	—	—	μs
Flash memory mode transition wait time 2		t_{MS}	15	—	—	15	—	—	μs

Note: Does not include the time until each operation of the flash memory is started after instructions are executed by software.
Note: The lower-limit frequency of ICLK is 1 MHz during programming or erasing the flash memory. When using ICLK at below 4 MHz, the frequency can be set to 1 MHz or 2 MHz. A non-integer frequency such as 1.5 MHz cannot be set.
Note: The frequency accuracy of ICLK must be ± 1.0% during programming or erasing the flash memory. Confirm the frequency accuracy of the clock source.
Note 1. Total time of four commands.

2.8.2 Data Flash Memory Characteristics

Table 2.53 Data flash characteristics (1)

Parameter		Symbol	Min	Typ	Max	Unit	Conditions
Reprogramming/erasure cycle*1		N_{DPEC}	100000	1000000	—	Times	—
Data hold time	After 10000 times of N_{DPEC}	t_{DDRP}	20*2 *3	—	—	Year	Ta = +85°C Ta = +105°C
	After 100000 times of N_{DPEC}		5*2 *3	—	—	Year	
	After 1000000 times of N_{DPEC}		—	1*2 *3	—	Year	Ta = +25°C

Note 1. The reprogram/erase cycle is the number of erasure for each block. When the reprogram/erase cycle is n times (n = 100,000), erasing can be performed n times for each block. For instance, when 1-byte programming is performed 1,024 times for different addresses in 1-KB blocks, and then the entire block is erased, the reprogram/erase cycle is counted as one. However, programming the same address for several times as one erasure is not enabled. (overwriting is prohibited.)
Note 2. Characteristics when using the flash memory programmer and the self-programming library provided by Renesas Electronics.
Note 3. This result is obtained from reliability testing.

Table 2.54 Data flash characteristics (2)

High-speed operating mode
Conditions: VCC = AVCC0 = 1.8 to 5.5 V

Parameter		Symbol	ICLK = 1 MHz			ICLK = 48 MHz			Unit
			Min	Typ	Max	Min	Typ	Max	
Programming time	1-byte	t_{DP1}	—	45	404	—	34	321	μs
Erasure time	1-KB	t_{DE1K}	—	8.8	280	—	6.1	224	ms
Blank check time	1-byte	t_{DBC1}	—	—	15.2	—	—	8.3	μs
	1-KB	t_{DBC1K}	—	—	1832	—	—	466	μs
Suspended time during erasing		t_{DSED}	—	—	13.2	—	—	10.5	μs
Data flash STOP recovery time		t_{DSTOP}	250	—	—	250	—	—	ns

Note: Does not include the time until each operation of the flash memory is started after instructions are executed by software.
Note: The lower-limit frequency of ICLK is 1 MHz during programming or erasing the flash memory. When using ICLK at below 4 MHz, the frequency can be set to 1 MHz, 2 MHz, or 3 MHz. A non-integer frequency such as 1.5 MHz cannot be set.
Note: The frequency accuracy of ICLK must be ± 1.0% during programming or erasing the flash memory. Confirm the frequency accuracy of the clock source.

Table 2.55 Data flash characteristics (3)

Middle-speed operating mode
Conditions: VCC = AVCC0 = 1.8 to 5.5 V

Parameter		Symbol	ICLK = 1 MHz			ICLK = 24 MHz*1			Unit
			Min	Typ	Max	Min	Typ	Max	
Programming time	1-byte	t_{DP1}	—	45	404	—	39	356	μs
Erasure time	1-KB	t_{DE1K}	—	8.8	280	—	7.3	248	ms
Blank check time	1-byte	t_{DBC1}	—	—	15.2	—	—	11.3	μs
	1-KB	t_{DBC1K}	—	—	1.84	—	—	1.06	ms
Suspended time during erasing		t_{DSED}	—	—	13.2	—	—	11.7	μs
Data flash STOP recovery time		t_{DSTOP}	250	—	—	250	—	—	ns

Note: Does not include the time until each operation of the flash memory is started after instructions are executed by software.
Note: The lower-limit frequency of ICLK is 1 MHz during programming or erasing the flash memory. When using ICLK at below 4 MHz, the frequency can be set to 1 MHz, 2 MHz, or 3 MHz. A non-integer frequency such as 1.5 MHz cannot be set.
Note: The frequency accuracy of ICLK must be ± 1.0% during programming or erasing the flash memory. Confirm the frequency accuracy of the clock source.
Note 1. When 1.8 V ≤ VCC = AVCC0 ≤ 5.5 V

Table 2.56 Data flash characteristics (4)

Low-speed operating mode
Conditions: VCC = AVCC0 = 1.6 to 5.5 V

Parameter		Symbol	ICLK = 1 MHz			ICLK = 2 MHz			Unit
			Min	Typ	Max	Min	Typ	Max	
Programming time	1-byte	t_{DP1}	—	86	732	—	57	502	μs
Erasure time	1-KB	t_{DE1K}	—	19.7	504	—	12.4	354	ms
Blank check time	1-byte	t_{DBC1}	—	—	46.5	—	—	23.3	μs
	1-KB	t_{DBC1K}	—	—	7.3	—	—	3.66	ms
Suspended time during erasing		t_{DSED}	—	—	22.3	—	—	16.2	μs
Data flash STOP recovery time		t_{DSTOP}	250	—	—	250	—	—	ns

Note: Does not include the time until each operation of the flash memory is started after instructions are executed by software.
Note: The lower-limit frequency of ICLK is 1 MHz during programming or erasing the flash memory. When using ICLK at below 2 MHz, the frequency can be set to 1 MHz or 2 MHz. A non-integer frequency such as 1.5 MHz cannot be set.
Note: The frequency accuracy of ICLK must be ± 1.0% during programming or erasing the flash memory. Confirm the frequency accuracy of the clock source.

2.9 Serial Wire Debug (SWD)

Table 2.57 SWD characteristics (1) (1 of 2)

Conditions: VCC = AVCC0 = 2.4 to 5.5 V

Parameter	Symbol	Min	Typ	Max	Unit	Test conditions
SWCLK clock cycle time	$t_{SWCKcyc}$	80	—	—	ns	Figure 2.46
SWCLK clock high pulse width	t_{SWCKH}	35	—	—	ns	
SWCLK clock low pulse width	t_{SWCKL}	35	—	—	ns	
SWCLK clock rise time	t_{SWCKr}	—	—	5	ns	
SWCLK clock fall time	t_{SWCKf}	—	—	5	ns	

Table 2.57 SWD characteristics (1) (2 of 2)

Conditions: VCC = AVCC0 = 2.4 to 5.5 V

Parameter	Symbol	Min	Typ	Max	Unit	Test conditions
SWDIO setup time	t_{SWDS}	16	—	—	ns	Figure 2.47
SWDIO hold time	t_{SWDH}	16	—	—	ns	
SWDIO data delay time	t_{SWDD}	2	—	70	ns	

Table 2.58 SWD characteristics (2)

Conditions: VCC = AVCC0 = 1.6 to 2.4 V

Parameter	Symbol	Min	Typ	Max	Unit	Test conditions
SWCLK clock cycle time	$t_{SWCKcyc}$	250	—	—	ns	Figure 2.46
SWCLK clock high pulse width	t_{SWCKH}	120	—	—	ns	
SWCLK clock low pulse width	t_{SWCKL}	120	—	—	ns	
SWCLK clock rise time	t_{SWCKr}	—	—	5	ns	
SWCLK clock fall time	t_{SWCKf}	—	—	5	ns	
SWDIO setup time	t_{SWDS}	50	—	—	ns	Figure 2.47
SWDIO hold time	t_{SWDH}	50	—	—	ns	
SWDIO data delay time	t_{SWDD}	2	—	170	ns	

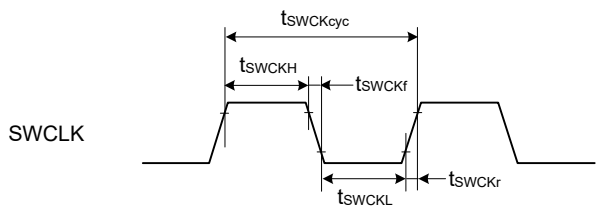

Figure 2.46 SWD SWCLK timing

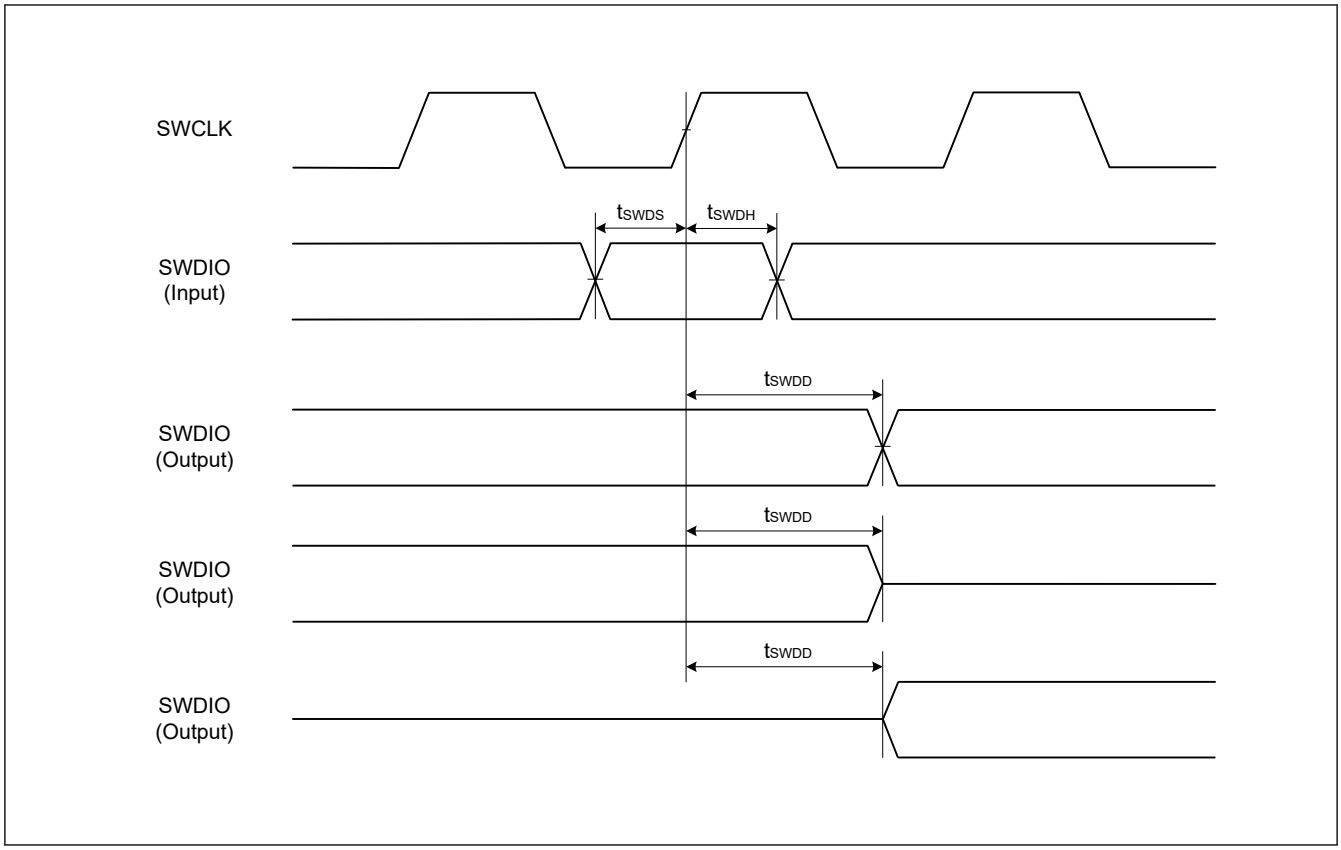

Figure 2.47 SWD input/output timing

Appendix 1. Port States in each Processing Mode

Table A1.1 Port states in each processing mode (1 of 2)

Port name	Reset	Software Standby Mode
P000/AN000/IRQ6	Hi-Z	Keep-O*1
P001/AN001/IRQ7	Hi-Z	Keep-O*1
P002/AN002/IRQ2	Hi-Z	Keep-O*1
P010/AN005	Hi-Z	Keep-O
P011/AN006	Hi-Z	Keep-O
P012/AN007	Hi-Z	Keep-O
P013/AN008	Hi-Z	Keep-O
P014/AN009	Hi-Z	Keep-O
P015/AN010/IRQ7_A	Hi-Z	Keep-O*1
P100/AGTIO0_A/GTETRGA_A/ GTIOC8B_A/RXD0_A/SCL0_D/SCK1_A/ MISOA_A/KRM00/IRQ2_A	Hi-Z	[AGTIO0_A output selected] AGTIO0_A output*2 [Other than the above] Keep-O*1
P101/AGTEE0/GTETRGB_A/GTIOC8A_A/ TXD0_A/MOSI0_A/SDA0_C/ CTS1_RTS1_A/KRM01/IRQ1_A	Hi-Z	Keep-O*1
P102/ADTRG0_A/AGTO0/GTOWLO_A/ GTIOC5B_A/SCK0_A/TXD2_D/MOSI2_D/ SDA2_D/RSPCKA_A/KRM02	Hi-Z	[AGTO0 selected] AGTO0 output*2 [Other than the above] Keep-O*1
P103/GTOWUP_A/GTIOC5A_A/ CTS0_RTS0_A/SSLA0_A/KRM03	Hi-Z	Keep-O*1
P104/GTETRGB_B/GTIOC4B_C/RXD0_C/ MISO0_C/SSLA1_A/KRM04/IRQ1_B	Hi-Z	Keep-O*1
P108/SWDIO/GTOULO_C/GTIOC0B_A/ CTS9_RTS9_B	Pull-up	Keep-O
P109/GTOVUP_A/GTIOC4A_A/SCK1_E/ TXD9_B/MOSI9_B/SDA9_B/CLKOUT_B	Hi-Z	[CLKOUT selected] CLKOUT output [Other than the above] Keep-O
P110/GTOVLO_A/GTIOC4B_A/ CTS2_RTS2_B/RXD9_B/SCL9_B/ MISOB_B/IRQ3_A	Hi-Z	Keep-O*1
P111/AGTOA0/GTIOC6A_A/SCK2_B/ SCK9_B/IRQ4_A	Hi-Z	[AGTOA0 selected] AGTOA0 output*2 [Other than the above] Keep-O*1
P112/AGTOB0/GTIOC6B_A/TXD2_B/ MOSI2_B/SDA2_B/SCK1_D	Hi-Z	[AGTOB0 selected] AGTOB0 output*2 [Other than the above] Keep-O
P200/NMI	Hi-Z	Hi-Z
P201/MD	Pull-up	Keep-O
P206/RXD0_D/MISO0_D/SCL0_D/IRQ0	Hi-Z	Keep-O*1
P207	Hi-Z	Keep-O
P208/AGTOB0_A	Hi-Z	[AGTOB0_A selected] AGTOB0_A output*2 [Other than the above] Keep-O

Table A1.1 Port states in each processing mode (2 of 2)

Port name	Reset	Software Standby Mode
P212/EXTAL /AGTEE1/GTETRGB_D/ GTIOC0B_D/RXD1_A/MISO1_A/SCL1_A/ IRQ3_B	Hi-Z	Keep-O*1
P213/XTAL /GTETRGA_D/GTIOC0A_D/ TXD1_A/MOSI1_A/SDA1_A/IRQ2_B	Hi-Z	Keep-O*1
P214/XCOUT, P215/XCIN	Hi-Z	[Sub-clock Oscillator selected] Sub-clock Oscillator is operating [Other than the above] Hi-Z
P300/SWCLK/GTOUUP_C/GTIOC0A_A	Pull-up	Keep-O
P301/AGTIO0_D/GTOULO_A/GTIOC7B_A/ RXD2_A/MISO2_A/SCL2_A/ CTS9_RTS9_D/IRQ6_A	Hi-Z	[AGTIO0_D output selected] AGTIO0_D output*2 [Other than the above] Keep-O*1
P302/GTOUUP_A/GTIOC7A_A/TXD2_A/ MOSI2_A/SDA2_A/IRQ5_A	Hi-Z	Keep-O*1
P400/CACREF_C/AGTIO1_C/GTIOC9A_A/ SCK0_B/SCK1_B/SCL0_A/IRQ0_A	Hi-Z	[AGTIO1_C output selected] AGTIO1_C output*2 [Other than the above] Keep-O*1
P401/GTETRGA_B/GTIOC9B_A/ CTS0_RTS0_B/TXD1_B/MOSI1_B/SDA1_B/ SDA0_A/IRQ5	Hi-Z	Keep-O*1
P407/ADTRG0_B/AGTIO0_C/RTCOUT/ CTS0_RTS0_D/SDA0_B	Hi-Z	[AGTIO0_C output selected] AGTIO0_C output*2 [RTCOUT selected] RTCOUT output [Other than the above] Keep-O*1
P408/GTOWLO_B/CTS1_RTS1_D/SCL0_C/ IRQ7_B	Hi-Z	Keep-O*1
P409/GTOWUP_B/IRQ6_B	Hi-Z	Keep-O*1
P500/GTIOC5A_B	Hi-Z	Keep-O
P913/AGTIO1_F/GTETRGA_F	Hi-Z	Keep-O
P914/AGTOA1_A/GTETRGB_F	Hi-Z	Keep-O
P915	Hi-Z	Keep-O

Note: Hi-Z: High-impedance
Keep-O: Output pins retain their previous values. Input pins become high-impedance.
Note 1. Input is enabled if the pin is specified as the software standby canceling source while it is used as an external interrupt pin.
Note 2. AGTIO output is enabled while LOCO or SOSC is selected as a count source.

Appendix 2. Package Dimensions

Information on the latest version of the package dimensions or mountings is displayed in “Packages” on the Renesas Electronics Corporation website.

JEITA Package Code	RENESAS Code	Previous Code	MASS (Typ) [g]
P-LFQFP48-7x7-0.50	PLQP0048KB-B	—	0.2

Unit: mm

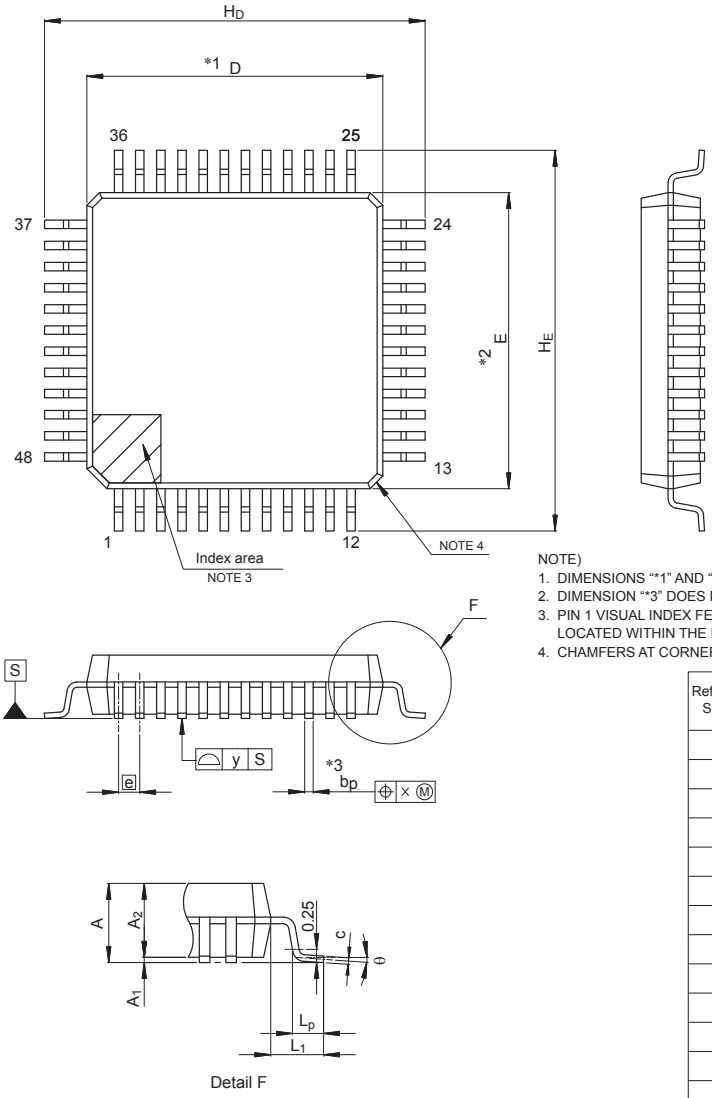

NOTE)
1. DIMENSIONS “*1” AND “*2” DO NOT INCLUDE MOLD FLASH.
2. DIMENSION “*3” DOES NOT INCLUDE TRIM OFFSET.
3. PIN 1 VISUAL INDEX FEATURE MAY VARY, BUT MUST BE LOCATED WITHIN THE HATCHED AREA.
4. CHAMFERS AT CORNERS ARE OPTIONAL, SIZE MAY VARY.

Reference Symbol	Dimensions in millimeters		
	Min	Nom	Max
D	6.9	7.0	7.1
E	6.9	7.0	7.1
A_2	—	1.4	—
H_D	8.8	9.0	9.2
H_E	8.8	9.0	9.2
A	—	—	1.7
A_1	0.05	—	0.15
b_p	0.17	0.20	0.27
c	0.09	—	0.20
θ	0°	3.5°	8°
e	—	0.5	—
x	—	—	0.08
y	—	—	0.08
L_p	0.45	0.6	0.75
L_1	—	1.0	—

© 2015 Renesas Electronics Corporation. All rights reserved.

Figure A2.1 LQFP 48-pin

JEITA Package code	RENESAS code	MASS(TYP.)[g]
P-HWQFN048-7x7-0.50	PWQN0048KC-A	0.13 g

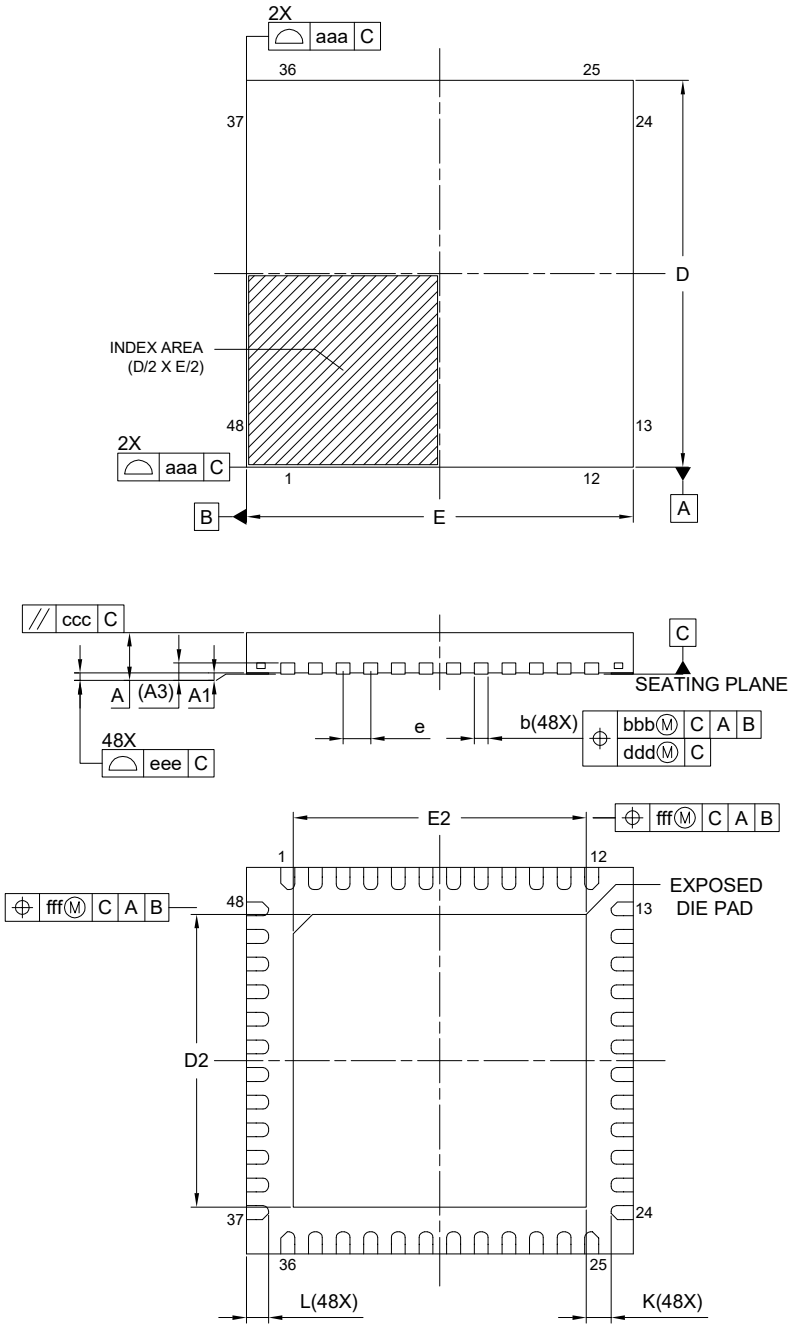

Reference Symbol	Dimension in Millimeters		
	Min.	Nom.	Max.
A	—	—	0.80
A_1	0.00	0.02	0.05
A_3	0.203 REF.		
b	0.20	0.25	0.30
D	7.00 BSC		
E	7.00 BSC		
e	0.50 BSC		
L	0.30	0.40	0.50
K	0.20	—	—
D_2	5.25	5.30	5.35
E_2	5.25	5.30	5.35
aaa	0.15		
bbb	0.10		
ccc	0.10		
ddd	0.05		
eee	0.08		
fff	0.10		

Figure A2.2 HWQFN 48-pin

JEITA Package Code	RENESAS Code	Previous Code	MASS[Typ.]
P-LQFP32-7x7-0.80	PLQP0032GB-A	32P6U-A	0.2g

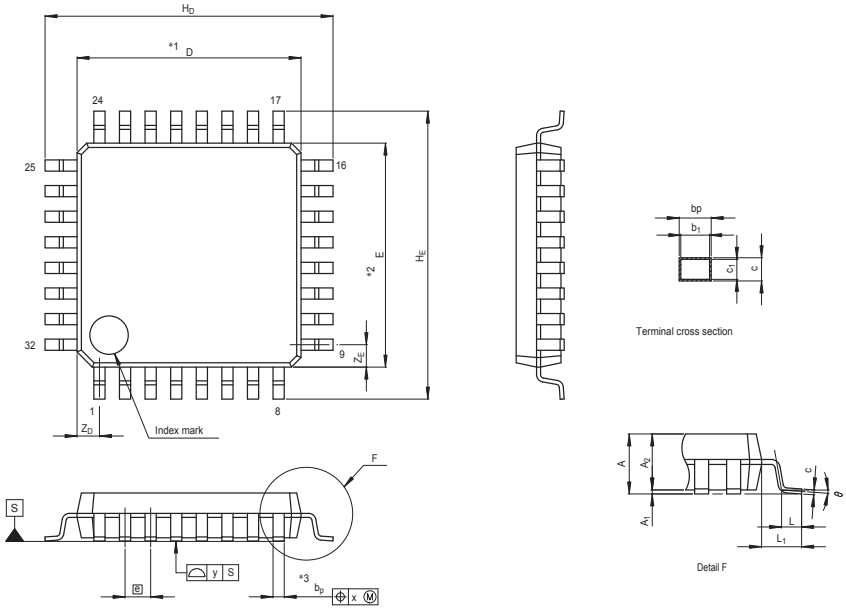

NOTE)
1. DIMENSIONS "*1" AND "*2" DO NOT INCLUDE MOLD FLASH.
2. DIMENSION "*3" DOES NOT INCLUDE TRIM OFFSET.

Reference Symbol	Dimension in Millimeters		
	Min	Nom	Max
D	6.9	7.0	7.1
E	6.9	7.0	7.1
A_2	—	1.4	—
H_D	8.8	9.0	9.2
H_E	8.8	9.0	9.2
A	—	—	1.7
A_1	0	0.1	0.2
b_p	0.32	0.37	0.42
b_1	—	0.35	—
c	0.09	0.145	0.20
c_1	—	0.125	—
θ	0°	—	8°
e	—	0.8	—
x	—	—	0.20
y	—	—	0.10
Z_D	—	0.7	—
Z_E	—	0.7	—
L	0.3	0.5	0.7
L_1	—	1.0	—

Figure A2.3 LQFP 32-pin

JEITA Package code	RENESAS code	MASS(TYP.)[g]
P-HWQFN032-5x5-0.50	PWQN0032KE-A	0.06

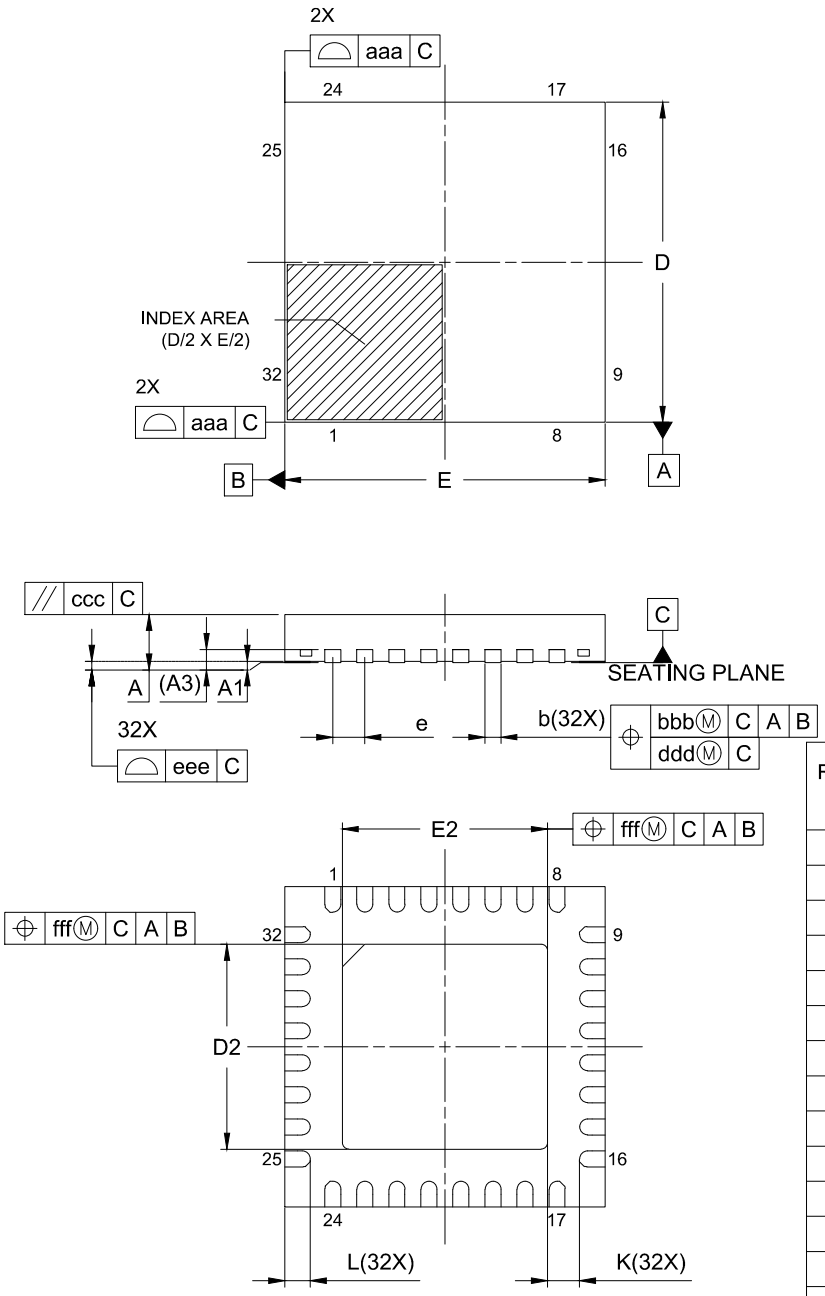

Reference Symbol	Dimension in Millimeters		
	Min.	Nom.	Max.
A	—	—	0.80
A_1	0.00	0.02	0.05
A_3	0.203 REF.		
b	0.18	0.25	0.30
D	5.00 BSC		
E	5.00 BSC		
e	0.50 BSC		
L	0.35	0.40	0.45
K	0.20	—	—
D_2	3.15	3.20	3.25
E_2	3.15	3.20	3.25
aaa	0.15		
bbb	0.10		
ccc	0.10		
ddd	0.05		
eee	0.08		
fff	0.10		

Figure A2.4 HWQFN 32-pin

Appendix 3. I/O Registers

This appendix describes I/O register addresses, access cycles, and reset values by function.

3.1 Peripheral Base Addresses

This section provides the base addresses for peripherals described in this manual.

Table A3.1 shows the name, description, and the base address of each peripheral.

Table A3.1 Peripheral base address (1 of 2)

Name	Description	Base address
MPU	Memory Protection Unit	0x4000_0000
SRAM	SRAM Control	0x4000_2000
BUS	BUS Control	0x4000_3000
DTC	Data Transfer Controller	0x4000_5400
ICU	Interrupt Controller	0x4000_6000
CPU_DBG	Debug Function	0x4001_B000
SYSC	System Control	0x4001_E000
PORT0	Port 0 Control Registers	0x4004_0000
PORT1	Port 1 Control Registers	0x4004_0020
PORT2	Port 2 Control Registers	0x4004_0040
PORT3	Port 3 Control Registers	0x4004_0060
PORT4	Port 4 Control Registers	0x4004_0080
PORT5	Port 5 Control Registers	0x4004_00A0
PORT9	Port 9 Control Registers	0x4004_0120
PFS	Pmn Pin Function Control Register	0x4004_0800
ELC	Event Link Controller	0x4004_1000
POEG	Port Output Enable Module for GPT	0x4004_2000
RTC	Realtime Clock	0x4004_4000
WDT	Watchdog Timer	0x4004_4200
IWDT	Independent Watchdog Timer	0x4004_4400
CAC	Clock Frequency Accuracy Measurement Circuit	0x4004_4600
MSTP	Module Stop Control B, C, D	0x4004_7000
IIC0	Inter-Integrated Circuit 0	0x4005_3000
IIC0WU	Inter-Integrated Circuit 0 Wakeup Unit	0x4005_3014
DOC	Data Operation Circuit	0x4005_4100
ADC12	12-bit A/D Converter	0x4005_C000
SCI0	Serial Communication Interface 0	0x4007_0000
SCI1	Serial Communication Interface 1	0x4007_0020
SCI2	Serial Communication Interface 2	0x4007_0040
SCI9	Serial Communication Interface 9	0x4007_0120
SPI0	Serial Peripheral Interface 0	0x4007_2000
CRC	CRC Calculator	0x4007_4000
GPT320	General PWM Timer 0 (32-bit)	0x4007_8000
GPT164	General PWM Timer 4 (16-bit)	0x4007_8400
GPT165	General PWM Timer 5 (16-bit)	0x4007_8500

Table A3.1 Peripheral base address (2 of 2)

Name	Description	Base address
GPT166	General PWM Timer 6 (16-bit)	0x4007_8600
GPT167	General PWM Timer 7 (16-bit)	0x4007_8700
GPT168	General PWM Timer 8 (16-bit)	0x4007_8800
GPT169	General PWM Timer 9 (16-bit)	0x4007_8900
GPT_OPS	Output Phase Switching Controller	0x4007_8FF0
KINT	Key Interrupt Function	0x4008_0000
AGT0	Low Power Asynchronous General Purpose Timer 0	0x4008_4000
AGT1	Low Power Asynchronous General Purpose Timer 1	0x4008_4100
FLCN	Flash I/O Registers	0x407E_C000

Note: Name = Peripheral name
Description = Peripheral functionality
Base address = Lowest reserved address or address used by the peripheral

3.2 Access Cycles

This section provides access cycle information for the I/O registers described in this manual.

The following information applies to Table A3.2:

- Registers are grouped by associated module.
- The number of access cycles indicates the number of cycles based on the specified reference clock.
- In the internal I/O area, reserved addresses that are not allocated to registers must not be accessed, otherwise operations cannot be guaranteed.
- The number of I/O access cycles depends on bus cycles of the internal peripheral bus, divided clock synchronization cycles, and wait cycles of each module. Divided clock synchronization cycles differ depending on the frequency ratio between ICLK and PCLK.
- When the frequency of ICLK is equal to that of PCLK, the number of divided clock synchronization cycles is always constant.
- When the frequency of ICLK is greater than that of PCLK, at least 1 PCLK cycle is added to the number of divided clock synchronization cycles.

Note: This applies to the number of cycles when access from the CPU does not conflict with the instruction fetching to the external memory or bus access from other bus master such as DTC.

Table A3.2 shows the register access cycles for non-GPT modules.

Table A3.2 Access cycles for non-GPT modules (1 of 2)

Peripherals	Address		Number of access cycles					
			ICLK = PCLK		ICLK > PCLK*1		Cycle unit	Related function
	From	To	Read	Write	Read	Write		
MPU, SRAM, BUS, DTC, ICU, CPU_DBG	0x4000_2000	0x4001_BFFF	3				ICLK	Memory Protection Unit, SRAM, Buses, Data Transfer Controller, Interrupt Controller, CPU, Flash Memory
SYSC	0x4001_E000	0x4001_E6FF	4				ICLK	Low Power Modes, Resets, Low Voltage Detection, Clock Generation Circuit, Register Write Protection

Table A3.2 Access cycles for non-GPT modules (2 of 2)

Peripherals	Address		Number of access cycles				Cycle unit	Related function
			ICLK = PCLK		ICLK > PCLK*1			
	From	To	Read	Write	Read	Write		
PORTn, PFS, ELC, POEG, RTC, WDT, IWDT, CAC, MSTP	0x4004_0000	0x4004_7FFF	3		2 to 3		PCLKB	I/O Ports, Event Link Controller, Port Output Enable for GPT, Realtime Clock, Watchdog Timer, Independent Watchdog Timer, Clock Frequency Accuracy Measurement Circuit, Module Stop Control
IICn (n = 0), IIC0WU, DOC, ADC12	0x4005_0000	0x4005_EFFF	3		2 to 3		PCLKB	I^2C Bus Interface, Data Operation Circuit, 12-bit A/D Converter
SCIn (n = 0 to 2, 9*2)	0x4007_0000	0x4007_0EFF	5		2 to 3		PCLKB	Serial Communications Interface
SPIn (n = 0)*3	0x4007_2000	0x4007_2FFF	5		2 to 3		PCLKB	Serial Peripheral Interface
CRC	0x4007_4000	0x4007_4FFF	3		2 to 3		PCLKB	CRC Calculator
GPT32n (n = 0), GPT16n (n = 4 to 9), GPT_OPS	0x4007_8000	0x4007_BFFF	See Table A3.3.				PCLKB	General PWM Timer
KINT	0x4008_0000	0x4008_2FFF	3		2 to 3		PCLKB	Key interrupt Function
AGTn	0x4008_4000	0x4008_4FFF	3		2 to 3		PCLKB	Low Power Asynchronous General Purpose Timer
FLCN	0x407E_C000	0x407E_FFFF	7		7		ICLK	Data Flash, Temperature Sensor, Capacitive Sensing Unit 2, Flash Control

Note 1. If the number of PCLK cycles is non-integer (for example 1.5), the minimum value is without the decimal point, and the maximum value is rounded up to the decimal point. For example, 1.5 to 2.5 is 1 to 3.

Note 2. Regarding n = 0, when accessing a 16-bit register (FTDRHL, FRDRHL, FCR, FDR, LSR, and CDR), access is 2 cycles more than the value shown in Table A3.2. When accessing an 8-bit register (FTDRH, FTDRL, FRDRH, and FRDRL), the access cycles are as shown in Table A3.2.

Note 3. When accessing the 32-bit register (SPDR), access is 2 cycles more than the value in Table A3.2. When accessing an 8-bit or 16-bit register (SPDR_HA), the access cycles are as shown in Table A3.2.

Table A3.3 shows register access cycles for GPT modules.

Table A3.3 Access cycles for GPT modules

Frequency ratio between ICLK and PCLK	Number of access cycles		Cycle unit
	Read	Write	
ICLK > PCLKD = PCLKB	5 to 6	3 to 4	PCLKB
ICLK > PCLKD > PCLKB	3 to 4	2 to 3	PCLKB
PCLKD = ICLK = PCLKB	6	4	PCLKB
PCLKD = ICLK > PCLKB	2 to 3	1 to 2	PCLKB
PCLKD > ICLK = PCLKB	4	3	PCLKB
PCLKD > ICLK > PCLKB	2 to 3	1 to 2	PCLKB

3.3 Register Descriptions

This section provides information associated with registers described in this manual.

Table A3.4 shows a list of registers including address offsets, address sizes, access rights, and reset values.

Table A3.4 Register description (1 of 13)

Peripheral name	Dim	Dim inc.	Dim index	Register name	Description	Address offset	Size	R/W	Reset value	Reset mask
MPU	-	-	-	MMPUCTLA	Bus Master MPU Control Register	0x000	16	R/W	0x0000	0xFFFF

Table A3.4 Register description (2 of 13)

Peripheral name	Dim	Dim inc.	Dim index	Register name	Description	Address offset	Size	R/W	Reset value	Reset mask
MPU	-	-	-	MMPUPTA	Group A Protection of Register	0x102	16	R/W	0x0000	0xFFFF
MPU	4	0x010	0-3	MMPUACA%s	Group A Region %s access control register	0x200	16	R/W	0x0000	0xFFFF
MPU	4	0x010	0-3	MMPUSA%s	Group A Region %s Start Address Register	0x204	32	R/W	0x00000000	0x00000003
MPU	4	0x010	0-3	MMPUEA%s	Group A Region %s End Address Register	0x208	32	R/W	0x00000003	0x00000003
MPU	-	-	-	SMPUCTL	Slave MPU Control Register	0xC00	16	R/W	0x0000	0xFFFF
MPU	-	-	-	SMPUMBIU	Access Control Register for Memory Bus 1	0xC10	16	R/W	0x0000	0xFFFF
MPU	-	-	-	SMPUFBIU	Access Control Register for Internal Peripheral Bus 9	0xC14	16	R/W	0x0000	0xFFFF
MPU	-	-	-	SMPUSRAM0	Access Control Register for Memory Bus 4	0xC18	16	R/W	0x0000	0xFFFF
MPU	-	-	-	SMPUP0BIU	Access Control Register for Internal Peripheral Bus 1	0xC20	16	R/W	0x0000	0xFFFF
MPU	-	-	-	SMPUP2BIU	Access Control Register for Internal Peripheral Bus 3	0xC24	16	R/W	0x0000	0xFFFF
MPU	-	-	-	MSPMPUOAD	Stack Pointer Monitor Operation After Detection Register	0xD00	16	R/W	0x0000	0xFFFF
MPU	-	-	-	MSPMPUCTL	Stack Pointer Monitor Access Control Register	0xD04	16	R/W	0x0000	0xFEFF
MPU	-	-	-	MSPMPUPT	Stack Pointer Monitor Protection Register	0xD06	16	R/W	0x0000	0xFFFF
MPU	-	-	-	MSPMPUSA	Main Stack Pointer (MSP) Monitor Start Address Register	0xD08	32	R/W	0x00000000	0x00000000
MPU	-	-	-	MSPMPUEA	Main Stack Pointer (MSP) Monitor End Address Register	0xD0C	32	R/W	0x00000000	0x00000000
MPU	-	-	-	PSPMPUOAD	Stack Pointer Monitor Operation After Detection Register	0xD10	16	R/W	0x0000	0xFFFF
MPU	-	-	-	PSPMPUCTL	Stack Pointer Monitor Access Control Register	0xD14	16	R/W	0x0000	0xFEFF
MPU	-	-	-	PSPMPUPT	Stack Pointer Monitor Protection Register	0xD16	16	R/W	0x0000	0xFFFF
MPU	-	-	-	PSPMPUSA	Process Stack Pointer (PSP) Monitor Start Address Register	0xD18	32	R/W	0x00000000	0x00000000
MPU	-	-	-	PSPMPUEA	Process Stack Pointer (PSP) Monitor End Address Register	0xD1C	32	R/W	0x00000000	0x00000000
SRAM	-	-	-	PARIOAD	SRAM Parity Error Operation After Detection Register	0x00	8	R/W	0x00	0xFF
SRAM	-	-	-	SRAMPRCR	SRAM Protection Register	0x04	8	R/W	0x00	0xFF
BUS	-	-	-	BUSMCNTSYS	Master Bus Control Register SYS	0x1008	16	R/W	0x0000	0xFFFF
BUS	-	-	-	BUSMCNTDMA	Master Bus Control Register DMA	0x100C	16	R/W	0x0000	0xFFFF
BUS	-	-	-	BUS3ERRADD	Bus Error Address Register 3	0x1820	32	R	0x00000000	0x00000000
BUS	-	-	-	BUS3ERRSTAT	BUS Error Status Register 3	0x1824	8	R	0x00	0xFE
BUS	-	-	-	BUS4ERRADD	Bus Error Address Register 4	0x1830	32	R	0x00000000	0x00000000
BUS	-	-	-	BUS4ERRSTAT	BUS Error Status Register 4	0x1834	8	R	0x00	0xFE
DTC	-	-	-	DTCCR	DTC Control Register	0x00	8	R/W	0x08	0xFF
DTC	-	-	-	DTCVBR	DTC Vector Base Register	0x04	32	R/W	0x00000000	0xFFFFFFFF
DTC	-	-	-	DTCST	DTC Module Start Register	0x0C	8	R/W	0x00	0xFF
DTC	-	-	-	DTCSTS	DTC Status Register	0x0E	16	R	0x0000	0xFFFF
ICU	8	0x1	0-7	IRQCR%s	IRQ Control Register	0x000	8	R/W	0x00	0xFF
ICU	-	-	-	NMICR	NMI Pin Interrupt Control Register	0x100	8	R/W	0x00	0xFF
ICU	-	-	-	NMIER	Non-Maskable Interrupt Enable Register	0x120	16	R/W	0x0000	0xFFFF
ICU	-	-	-	NMICLR	Non-Maskable Interrupt Status Clear Register	0x130	16	R/W	0x0000	0xFFFF
ICU	-	-	-	NMISR	Non-Maskable Interrupt Status Register	0x140	16	R	0x0000	0xFFFF

Table A3.4 Register description (3 of 13)

Peripheral name	Dim	Dim inc.	Dim index	Register name	Description	Address offset	Size	R/W	Reset value	Reset mask
ICU	-	-	-	WUPEN	Wake Up Interrupt Enable Register	0x1A0	32	R/W	0x00000000	0xFFFFFFFF
ICU	-	-	-	IELEN	ICU event Enable Register	0x1C0	8	R/W	0x00	0xFF
ICU	-	-	-	SELSR0	SYS Event Link Setting Register	0x200	16	R/W	0x0000	0xFFFF
ICU	32	0x4	0-31	IELSR%s	ICU Event Link Setting Register %s	0x300	32	R/W	0x00000000	0xFFFFFFFF
CPU_DBG	-	-	-	DBGSTR	Debug Status Register	0x00	32	R	0x00000000	0xFFFFFFFF
CPU_DBG	-	-	-	DBGSTOPCR	Debug Stop Control Register	0x10	32	R/W	0x00000003	0xFFFFFFFF
SYSC	-	-	-	SBYCR	Standby Control Register	0x00C	16	R/W	0x0000	0xFFFF
SYSC	-	-	-	MSTPCRA	Module Stop Control Register A	0x01C	32	R/W	0xFFBFFFFF	0xFFFFFFFF
SYSC	-	-	-	SCKDIVCR	System Clock Division Control Register	0x020	32	R/W	0x04000404	0xFFFFFFFF
SYSC	-	-	-	SCKSCR	System Clock Source Control Register	0x026	8	R/W	0x01	0xFF
SYSC	-	-	-	MEMWAIT	Memory Wait Cycle Control Register for Code Flash	0x031	8	R/W	0x00	0xFF
SYSC	-	-	-	MOSCCR	Main Clock Oscillator Control Register	0x032	8	R/W	0x01	0xFF
SYSC	-	-	-	HOCOCR	High-Speed On-Chip Oscillator Control Register	0x036	8	R/W	0x00	0xFE
SYSC	-	-	-	MOCOCR	Middle-Speed On-Chip Oscillator Control Register	0x038	8	R/W	0x00	0xFF
SYSC	-	-	-	OSCSF	Oscillation Stabilization Flag Register	0x03C	8	R	0x00	0xFE
SYSC	-	-	-	CKOCR	Clock Out Control Register	0x03E	8	R/W	0x00	0xFF
SYSC	-	-	-	OSTDCR	Oscillation Stop Detection Control Register	0x040	8	R/W	0x00	0xFF
SYSC	-	-	-	OSTDSR	Oscillation Stop Detection Status Register	0x041	8	R/W	0x00	0xFF
SYSC	-	-	-	LPOPT	Lower Power Operation Control Register	0x04C	8	R/W	0x40	0xFF
SYSC	-	-	-	MOCOUTCR	MOCO User Trimming Control Register	0x061	8	R/W	0x00	0xFF
SYSC	-	-	-	HOCOUTCR	HOCO User Trimming Control Register	0x062	8	R/W	0x00	0xFF
SYSC	-	-	-	SNZCR	Snooze Control Register	0x092	8	R/W	0x00	0xFF
SYSC	-	-	-	SNZEDCR0	Snooze End Control Register 0	0x094	8	R/W	0x00	0xFF
SYSC	-	-	-	SNZREQCR0	Snooze Request Control Register 0	0x098	32	R/W	0x00000000	0xFFFFFFFF
SYSC	-	-	-	PSMCR	Power Save Memory Control Register	0x09F	8	R/W	0x00	0xFF
SYSC	-	-	-	OPCCR	Operating Power Control Register	0x0A0	8	R/W	0x01	0xFF
SYSC	-	-	-	MOSCWTCR	Main Clock Oscillator Wait Control Register	0x0A2	8	R/W	0x05	0xFF
SYSC	-	-	-	HOCOWTCR	High-Speed On-Chip Oscillator Wait Control Register	0x0A5	8	R/W	0x05	0xFF
SYSC	-	-	-	SOPCCR	Sub Operating Power Control Register	0x0AA	8	R/W	0x00	0xFF
SYSC	-	-	-	RSTSR1	Reset Status Register 1	0x0C0	16	R/W	0x0000	0xE2F8
SYSC	-	-	-	LVD1CR1	Voltage Monitor 1 Circuit Control Register	0x0E0	8	R/W	0x01	0xFF
SYSC	-	-	-	LVD1SR	Voltage Monitor 1 Circuit Status Register	0x0E1	8	R/W	0x02	0xFF
SYSC	-	-	-	LVD2CR1	Voltage Monitor 2 Circuit Control Register 1	0x0E2	8	R/W	0x01	0xFF
SYSC	-	-	-	LVD2SR	Voltage Monitor 2 Circuit Status Register	0x0E3	8	R/W	0x02	0xFF
SYSC	-	-	-	PRCR	Protect Register	0x3FE	16	R/W	0x0000	0xFFFF
SYSC	-	-	-	SYOCDCR	System Control OCD Control Register	0x040E	8	R/W	0x00	0xFF
SYSC	-	-	-	RSTSR0	Reset Status Register 0	0x410	8	R/W	0x00	0xF0
SYSC	-	-	-	RSTSR2	Reset Status Register 2	0x411	8	R/W	0x00	0xFE
SYSC	-	-	-	MOMCR	Main Clock Oscillator Mode Oscillation Control Register	0x413	8	R/W	0x00	0xFF
SYSC	-	-	-	LVCMPCR	Voltage Monitor Circuit Control Register	0x417	8	R/W	0x00	0xFF
SYSC	-	-	-	LVDLVLR	Voltage Detection Level Select Register	0x418	8	R/W	0x07	0xFF

Table A3.4 Register description (4 of 13)

Peripheral name	Dim	Dim inc.	Dim index	Register name	Description	Address offset	Size	R/W	Reset value	Reset mask
SYSC	-	-	-	LVD1CR0	Voltage Monitor 1 Circuit Control Register 0	0x41A	8	R/W	0x80	0xF7
SYSC	-	-	-	LVD2CR0	Voltage Monitor 2 Circuit Control Register 0	0x41B	8	R/W	0x80	0xF7
SYSC	-	-	-	SOSCCR	Sub-Clock Oscillator Control Register	0x480	8	R/W	0x01	0xFF
SYSC	-	-	-	SOMCR	Sub-Clock Oscillator Mode Control Register	0x481	8	R/W	0x00	0xFF
SYSC	-	-	-	SOMRG	Sub-Clock Oscillator Margin Check Register	0x482	8	R/W	0x00	0xFF
SYSC	-	-	-	LOCOCR	Low-Speed On-Chip Oscillator Control Register	0x490	8	R/W	0x00	0xFF
SYSC	-	-	-	LOCOUTCR	LOCO User Trimming Control Register	0x492	8	R/W	0x00	0xFF
PORT0,3-5,9	-	-	-	PCNTR1	Port Control Register 1	0x000	32	R/W	0x00000000	0xFFFFFFFF
PORT0,3-5,9	-	-	-	PODR	Port Control Register 1	0x000	16	R/W	0x0000	0xFFFF
PORT0,3-5,9	-	-	-	PDR	Port Control Register 1	0x002	16	R/W	0x0000	0xFFFF
PORT0,3-5,9	-	-	-	PCNTR2	Port Control Register 2	0x004	32	R	0x00000000	0xFFFF0000
PORT0,3-5,9	-	-	-	PIDR	Port Control Register 2	0x006	16	R	0x0000	0x0000
PORT0,3-5,9	-	-	-	PCNTR3	Port Control Register 3	0x008	32	W	0x00000000	0xFFFFFFFF
PORT0,3-5,9	-	-	-	PORR	Port Control Register 3	0x008	16	W	0x0000	0xFFFF
PORT0,3-5,9	-	-	-	POSR	Port Control Register 3	0x00A	16	W	0x0000	0xFFFF
PORT1-2	-	-	-	PCNTR1	Port Control Register 1	0x000	32	R/W	0x00000000	0xFFFFFFFF
PORT1-2	-	-	-	PODR	Port Control Register 1	0x000	16	R/W	0x0000	0xFFFF
PORT1-2	-	-	-	PDR	Port Control Register 1	0x002	16	R/W	0x0000	0xFFFF
PORT1-2	-	-	-	PCNTR2	Port Control Register 2	0x004	32	R	0x00000000	0xFFFF0000
PORT1-2	-	-	-	EIDR	Port Control Register 2	0x004	16	R	0x0000	0xFFFF
PORT1-2	-	-	-	PIDR	Port Control Register 2	0x006	16	R	0x0000	0x0000
PORT1-2	-	-	-	PCNTR3	Port Control Register 3	0x008	32	W	0x00000000	0xFFFFFFFF
PORT1-2	-	-	-	PORR	Port Control Register 3	0x008	16	W	0x0000	0xFFFF
PORT1-2	-	-	-	POSR	Port Control Register 3	0x00A	16	W	0x0000	0xFFFF
PORT1-2	-	-	-	PCNTR4	Port Control Register 4	0x00C	32	R/W	0x00000000	0xFFFFFFFF
PORT1-2	-	-	-	EORR	Port Control Register 4	0x00C	16	R/W	0x0000	0xFFFF
PORT1-2	-	-	-	EOSR	Port Control Register 4	0x00E	16	R/W	0x0000	0xFFFF
PFS	3	0x4	0-2	P00%sPFS	Port 00%s Pin Function Select Register	0x000	32	R/W	0x00000000	0xFFFFFFFD
PFS	3	0x4	0-2	P00%sPFS_HA	Port 00%s Pin Function Select Register	0x002	16	R/W	0x0000	0xFFFD
PFS	3	0x4	0-2	P00%sPFS_BY	Port 00%s Pin Function Select Register	0x003	8	R/W	0x00	0xFD
PFS	6	0x4	10-15	P0%sPFS	Port 0%s Pin Function Select Register	0x028	32	R/W	0x00000000	0xFFFFFFFD
PFS	6	0x4	10-15	P0%sPFS_HA	Port 0%s Pin Function Select Register	0x02A	16	R/W	0x0000	0xFFFD
PFS	6	0x4	10-15	P0%sPFS_BY	Port 0%s Pin Function Select Register	0x02B	8	R/W	0x00	0xFD
PFS	5	0x4	0-4	P10%sPFS	Port 10%s Pin Function Select Register	0x040	32	R/W	0x00000000	0xFFFFFFFD
PFS	5	0x4	0-4	P10%sPFS_HA	Port 10%s Pin Function Select Register	0x042	16	R/W	0x0000	0xFFFD
PFS	5	0x4	0-4	P10%sPFS_BY	Port 10%s Pin Function Select Register	0x043	8	R/W	0x00	0xFD
PFS	-	-	-	P108PFS	Port 108 Pin Function Select Register	0x060	32	R/W	0x00010010	0xFFFFFFFD
PFS	-	-	-	P108PFS_HA	Port 108 Pin Function Select Register	0x062	16	R/W	0x0010	0xFFFD

Table A3.4 Register description (5 of 13)

Peripheral name	Dim	Dim inc.	Dim index	Register name	Description	Address offset	Size	R/W	Reset value	Reset mask
PFS	-	-	-	P108PFS_BY	Port 108 Pin Function Select Register	0x063	8	R/W	0x10	0xFD
PFS	-	-	-	P109PFS	Port 109 Pin Function Select Register	0x064	32	R/W	0x00000000	0xFFFFFFFD
PFS	-	-	-	P109PFS_HA	Port 109 Pin Function Select Register	0x066	16	R/W	0x0000	0xFFFD
PFS	-	-	-	P109PFS_BY	Port 109 Pin Function Select Register	0x067	8	R/W	0x00	0xFD
PFS	3	0x4	10-12	P1%sPFS	Port 1%s Pin Function Select Register	0x068	32	R/W	0x00000000	0xFFFFFFFD
PFS	3	0x4	10-12	P1%sPFS_HA	Port 1%s Pin Function Select Register	0x06A	16	R/W	0x0000	0xFFFD
PFS	3	0x4	10-12	P1%sPFS_BY	Port 1%s Pin Function Select Register	0x06B	8	R/W	0x00	0xFD
PFS	-	-	-	P200PFS	Port 200 Pin Function Select Register	0x080	32	R/W	0x00000000	0xFFFFFFFD
PFS	-	-	-	P200PFS_HA	Port 200 Pin Function Select Register	0x082	16	R/W	0x0000	0xFFFD
PFS	-	-	-	P200PFS_BY	Port 200 Pin Function Select Register	0x083	8	R/W	0x00	0xFD
PFS	-	-	-	P201PFS	Port 201 Pin Function Select Register	0x084	32	R/W	0x00000010	0xFFFFFFFD
PFS	-	-	-	P201PFS_HA	Port 201 Pin Function Select Register	0x086	16	R/W	0x0010	0xFFFD
PFS	-	-	-	P201PFS_BY	Port 201 Pin Function Select Register	0x087	8	R/W	0x10	0xFD
PFS	3	0x4	6-8	P20%sPFS	Port 20%s Pin Function Select Register	0x088	32	R/W	0x00000000	0xFFFFFFFD
PFS	3	0x4	6-8	P20%sPFS_HA	Port 20%s Pin Function Select Register	0x08A	16	R/W	0x0000	0xFFFD
PFS	3	0x4	6-8	P20%sPFS_BY	Port 20%s Pin Function Select Register	0x08B	8	R/W	0x00	0xFD
PFS	4	0x4	12-15	P2%sPFS	Port 2%s Pin Function Select Register	0x0B0	32	R/W	0x00000000	0xFFFFFFFD
PFS	4	0x4	12-15	P2%sPFS_HA	Port 2%s Pin Function Select Register	0x0B2	16	R/W	0x0000	0xFFFD
PFS	4	0x4	12-15	P2%sPFS_BY	Port 2%s Pin Function Select Register	0x0B3	8	R/W	0x00	0xFD
PFS	-	-	-	P300PFS	Port 300 Pin Function Select Register	0x0C0	32	R/W	0x00010000	0xFFFFFFFD
PFS	-	-	-	P300PFS_HA	Port 300 Pin Function Select Register	0x0C2	16	R/W	0x0000	0xFFFD
PFS	-	-	-	P300PFS_BY	Port 300 Pin Function Select Register	0x0C3	8	R/W	0x00	0xFD
PFS	2	0x4	1, 2	P30%sPFS	Port 30%s Pin Function Select Register	0x0C4	32	R/W	0x00000000	0xFFFFFFFD
PFS	2	0x4	1, 2	P30%sPFS_HA	Port 30%s Pin Function Select Register	0x0C6	16	R/W	0x0000	0xFFFD
PFS	2	0x4	1, 2	P30%sPFS_BY	Port 30%s Pin Function Select Register	0x0C7	8	R/W	0x00	0xFD
PFS	5	0x4	0, 1, 7-9	P40%sPFS	Port 40%s Pin Function Select Register	0x100	32	R/W	0x00000000	0xFFFFFFFD
PFS	5	0x4	0, 1, 7-9	P40%sPFS_HA	Port 40%s Pin Function Select Register	0x102	16	R/W	0x0000	0xFFFD
PFS	5	0x4	0, 1, 7-9	P40%sPFS_BY	Port 40%s Pin Function Select Register	0x103	8	R/W	0x00	0xFD
PFS	-	-	-	P500PFS	Port 500 Pin Function Select Register	0x140	32	R/W	0x00000000	0xFFFFFFFD
PFS	-	-	-	P500PFS_HA	Port 500 Pin Function Select Register	0x142	16	R/W	0x0000	0xFFFD
PFS	-	-	-	P500PFS_BY	Port 500 Pin Function Select Register	0x143	8	R/W	0x00	0xFD
PFS	3	0x4	13-15	P90%sPFS	Port 90%s Pin Function Select Register	0x274	32	R/W	0x00000000	0xFFFFFFFD
PFS	3	0x4	13-15	P90%sPFS_HA	Port 90%s Pin Function Select Register	0x276	16	R/W	0x0000	0xFFFD
PFS	3	0x4	13-15	P90%sPFS_BY	Port 90%s Pin Function Select Register	0x277	8	R/W	0x00	0xFD
PFS	-	-	-	PWPR	Write-Protect Register	0x503	8	R/W	0x80	0xFF
PFS	-	-	-	PRWCNTR	Port Read Wait Control Register	0x50F	8	R/W	0x01	0xFF
ELC	-	-	-	ELCR	Event Link Controller Register	0x00	8	R/W	0x00	0xFF
ELC	2	0x02	0-1	ELSEGR%s	Event Link Software Event Generation Register %s	0x02	8	R/W	0x80	0xFF
ELC	4	0x04	0-3	ELSR%s	Event Link Setting Register %s	0x10	16	R/W	0x0000	0xFFFF
ELC	2	0x04	8-9	ELSR%s	Event Link Setting Register %s	0x30	16	R/W	0x0000	0xFFFF
ELC	2	0x04	14-15	ELSR%s	Event Link Setting Register %s	0x48	16	R/W	0x0000	0xFFFF
POEG	-	-	-	POEGGA	POEG Group A Setting Register	0x000	32	R/W	0x00000000	0xFFFFFFFF
POEG	-	-	-	POEGGB	POEG Group B Setting Register	0x100	32	R/W	0x00000000	0xFFFFFFFF
RTC	-	-	-	R64CNT	64-Hz Counter	0x00	8	R	0x00	0x00
RTC	4	0x02	0-3	BCNT%s	Binary Counter %s	0x02	8	R/W	0x00	0x00

Table A3.4 Register description (6 of 13)

Peripheral name	Dim	Dim inc.	Dim index	Register name	Description	Address offset	Size	R/W	Reset value	Reset mask
RTC	-	-	-	RSECCNT	Second Counter (in Calendar Count Mode)	0x02	8	R/W	0x00	0x00
RTC	-	-	-	RMINCNT	Minute Counter (in Calendar Count Mode)	0x04	8	R/W	0x00	0x00
RTC	-	-	-	RHRCNT	Hour Counter (in Calendar Count Mode)	0x06	8	R/W	0x00	0x00
RTC	-	-	-	RWKCNT	Day-of-Week Counter (in Calendar Count Mode)	0x08	8	R/W	0x00	0x00
RTC	-	-	-	RDAYCNT	Day Counter	0x0A	8	R/W	0x00	0xC0
RTC	-	-	-	RMONCNT	Month Counter	0x0C	8	R/W	0x00	0xE0
RTC	-	-	-	RYRCNT	Year Counter	0x0E	16	R/W	0x0000	0xFF00
RTC	4	0x02	0-3	BCNT%sAR	Binary Counter %s Alarm Register	0x10	8	R/W	0x00	0x00
RTC	-	-	-	RSECAR	Second Alarm Register (in Calendar Count Mode)	0x10	8	R/W	0x00	0x00
RTC	-	-	-	RMINAR	Minute Alarm Register (in Calendar Count Mode)	0x12	8	R/W	0x00	0x00
RTC	-	-	-	RHRAR	Hour Alarm Register (in Calendar Count Mode)	0x14	8	R/W	0x00	0x00
RTC	-	-	-	RWKAR	Day-of-Week Alarm Register (in Calendar Count Mode)	0x16	8	R/W	0x00	0x00
RTC	2	0x02	0-1	BCNT%sAER	Binary Counter %s Alarm Enable Register	0x18	8	R/W	0x00	0x00
RTC	-	-	-	RDAYAR	Date Alarm Register (in Calendar Count Mode)	0x18	8	R/W	0x00	0x00
RTC	-	-	-	RMONAR	Month Alarm Register (in Calendar Count Mode)	0x1A	8	R/W	0x00	0x00
RTC	-	-	-	BCNT2AER	Binary Counter 2 Alarm Enable Register	0x1C	16	R/W	0x0000	0xFF00
RTC	-	-	-	RYRAR	Year Alarm Register (in Calendar Count Mode)	0x1C	16	R/W	0x0000	0xFF00
RTC	-	-	-	BCNT3AER	Binary Counter 3 Alarm Enable Register	0x1E	8	R/W	0x00	0x00
RTC	-	-	-	RYRAREN	Year Alarm Enable Register (in Calendar Count Mode)	0x1E	8	R/W	0x00	0x00
RTC	-	-	-	RCR1	RTC Control Register 1	0x22	8	R/W	0x00	0x0A
RTC	-	-	-	RCR2	RTC Control Register 2 (in Calendar Count Mode)	0x24	8	R/W	0x00	0x0E
RTC	-	-	-	RCR2	RTC Control Register 2 (in Binary Count Mode)	0x24	8	R/W	0x00	0x0E
RTC	-	-	-	RCR4	RTC Control Register 4	0x28	8	R/W	0x00	0x7E
RTC	-	-	-	RFRH	Frequency Register H	0x2A	16	R/W	0x0000	0xFFFE
RTC	-	-	-	RFRL	Frequency Register L	0x2C	16	R/W	0x0000	0x0000
RTC	-	-	-	RADJ	Time Error Adjustment Register	0x2E	8	R/W	0x00	0x00
WDT	-	-	-	WDTRR	WDT Refresh Register	0x00	8	R/W	0xFF	0xFF
WDT	-	-	-	WDTCR	WDT Control Register	0x02	16	R/W	0x0000	0xFFFF
WDT	-	-	-	WDTSR	WDT Status Register	0x04	16	R/W	0x0000	0xFFFF
WDT	-	-	-	WDTRCR	WDT Reset Control Register	0x06	8	R/W	0x80	0xFF
WDT	-	-	-	WDTCSTPR	WDT Count Stop Control Register	0x08	8	R/W	0x80	0xFF
IWDT	-	-	-	IWDTRR	IWDT Refresh Register	0x00	8	R/W	0xFF	0xFF
IWDT	-	-	-	IWDTSR	IWDT Status Register	0x04	16	R/W	0x0000	0xFFFF
CAC	-	-	-	CACR0	CAC Control Register 0	0x00	8	R/W	0x00	0xFF
CAC	-	-	-	CACR1	CAC Control Register 1	0x01	8	R/W	0x00	0xFF
CAC	-	-	-	CACR2	CAC Control Register 2	0x02	8	R/W	0x00	0xFF
CAC	-	-	-	CAICR	CAC Interrupt Control Register	0x03	8	R/W	0x00	0xFF
CAC	-	-	-	CASTR	CAC Status Register	0x04	8	R	0x00	0xFF
CAC	-	-	-	CAULVR	CAC Upper-Limit Value Setting Register	0x06	16	R/W	0x0000	0xFFFF

Table A3.4 Register description (7 of 13)

Peripheral name	Dim	Dim inc.	Dim index	Register name	Description	Address offset	Size	R/W	Reset value	Reset mask
CAC	-	-	-	CALLVR	CAC Lower-Limit Value Setting Register	0x08	16	R/W	0x0000	0xFFFF
CAC	-	-	-	CACNTBR	CAC Counter Buffer Register	0x0A	16	R	0x0000	0xFFFF
MSTP	-	-	-	MSTPCRB	Module Stop Control Register B	0x000	32	R/W	0xFFFFFFFF	0xFFFFFFFF
MSTP	-	-	-	MSTPCRC	Module Stop Control Register C	0x004	32	R/W	0xFFFFFFFF	0xFFFFFFFF
MSTP	-	-	-	MSTPCRD	Module Stop Control Register D	0x008	32	R/W	0xFFFFFFFF	0xFFFFFFFF
IIC0	-	-	-	ICCR1	I2C Bus Control Register 1	0x00	8	R/W	0x1F	0xFF
IIC0	-	-	-	ICCR2	I2C Bus Control Register 2	0x01	8	R/W	0x00	0xFF
IIC0	-	-	-	ICMR1	I2C Bus Mode Register 1	0x02	8	R/W	0x08	0xFF
IIC0	-	-	-	ICMR2	I2C Bus Mode Register 2	0x03	8	R/W	0x06	0xFF
IIC0	-	-	-	ICMR3	I2C Bus Mode Register 3	0x04	8	R/W	0x00	0xFF
IIC0	-	-	-	ICFER	I2C Bus Function Enable Register	0x05	8	R/W	0x72	0xFF
IIC0	-	-	-	ICSER	I2C Bus Status Enable Register	0x06	8	R/W	0x09	0xFF
IIC0	-	-	-	ICIER	I2C Bus Interrupt Enable Register	0x07	8	R/W	0x00	0xFF
IIC0	-	-	-	ICSR1	I2C Bus Status Register 1	0x08	8	R/W	0x00	0xFF
IIC0	-	-	-	ICSR2	I2C Bus Status Register 2	0x09	8	R/W	0x00	0xFF
IIC0	3	0x02	0-2	SARL%s	Slave Address Register Ly	0x0A	8	R/W	0x00	0xFF
IIC0	3	0x02	0-2	SARU%s	Slave Address Register Uy	0x0B	8	R/W	0x00	0xFF
IIC0	-	-	-	ICBRL	I2C Bus Bit Rate Low-Level Register	0x10	8	R/W	0xFF	0xFF
IIC0	-	-	-	ICBRH	I2C Bus Bit Rate High-Level Register	0x11	8	R/W	0xFF	0xFF
IIC0	-	-	-	ICDRT	I2C Bus Transmit Data Register	0x12	8	R/W	0xFF	0xFF
IIC0	-	-	-	ICDRR	I2C Bus Receive Data Register	0x13	8	R	0x00	0xFF
IIC0WU	-	-	-	ICWUR	I2C Bus Wakeup Unit Register	0x02	8	R/W	0x10	0xFF
IIC0WU	-	-	-	ICWUR2	I2C Bus Wakeup Unit Register 2	0x03	8	R/W	0xFD	0xFF
DOC	-	-	-	DOCR	DOC Control Register	0x00	8	R/W	0x00	0xFF
DOC	-	-	-	DODIR	DOC Data Input Register	0x02	16	R/W	0x0000	0xFFFF
DOC	-	-	-	DODSR	DOC Data Setting Register	0x04	16	R/W	0x0000	0xFFFF
ADC12	-	-	-	ADCSR	A/D Control Register	0x000	16	R/W	0x0000	0xFFFF
ADC12	-	-	-	ADANSA0	A/D Channel Select Register A0	0x004	16	R/W	0x0000	0xFFFF
ADC12	-	-	-	ADANSA1	A/D Channel Select Register A1	0x006	16	R/W	0x0000	0xFFFF
ADC12	-	-	-	ADADS0	A/D-Converted Value Addition/Average Channel Select Register 0	0x008	16	R/W	0x0000	0xFFFF
ADC12	-	-	-	ADADS1	A/D-Converted Value Addition/Average Channel Select Register 1	0x00A	16	R/W	0x0000	0xFFFF
ADC12	-	-	-	ADADC	A/D-Converted Value Addition/Average Count Select Register	0x00C	8	R/W	0x00	0xFF
ADC12	-	-	-	ADCER	A/D Control Extended Register	0x00E	16	R/W	0x0000	0xFFFF
ADC12	-	-	-	ADSTRGR	A/D Conversion Start Trigger Select Register	0x010	16	R/W	0x0000	0xFFFF
ADC12	-	-	-	ADEXICR	A/D Conversion Extended Input Control Registers	0x012	16	R/W	0x0000	0xFFFF
ADC12	-	-	-	ADANSB0	A/D Channel Select Register B0	0x014	16	R/W	0x0000	0xFFFF
ADC12	-	-	-	ADANSB1	A/D Channel Select Register B1	0x016	16	R/W	0x0000	0xFFFF
ADC12	-	-	-	ADDBLDR	A/D Data Duplexing Register	0x018	16	R	0x0000	0xFFFF
ADC12	-	-	-	ADTSDR	A/D Temperature Sensor Data Register	0x01A	16	R	0x0000	0xFFFF
ADC12	-	-	-	ADOCDR	A/D Internal Reference Voltage Data Register	0x01C	16	R	0x0000	0xFFFF
ADC12	-	-	-	ADRD	A/D Self-Diagnosis Data Register	0x01E	16	R	0x0000	0xFFFF
ADC12	9	0x2	0-2, 5-10	ADDR%s	A/D Data Registers %s	0x020	16	R	0x0000	0xFFFF

Table A3.4 Register description (8 of 13)

Peripheral name	Dim	Dim inc.	Dim index	Register name	Description	Address offset	Size	R/W	Reset value	Reset mask
ADC12	4	0x2	19-22	ADDR%s	A/D Data Registers %s	0x042	16	R	0x0000	0xFFFF
ADC12	-	-	-	ADDISCR	A/D Disconnection Detection Control Register	0x07A	8	R/W	0x00	0xFF
ADC12	-	-	-	ADACSR	A/D Conversion Operation Mode Select Register	0x07E	8	R/W	0x00	0xFF
ADC12	-	-	-	ADGSPCR	A/D Group Scan Priority Control Register	0x080	16	R/W	0x0000	0xFFFF
ADC12	-	-	-	ADDBLDRA	A/D Data Duplexing Register A	0x084	16	R	0x0000	0xFFFF
ADC12	-	-	-	ADDBLDRB	A/D Data Duplexing Register B	0x086	16	R	0x0000	0xFFFF
ADC12	-	-	-	ADHVREFCNT	A/D High-Potential/Low-Potential Reference Voltage Control Register	0x08A	8	R/W	0x00	0xFF
ADC12	-	-	-	ADWINMON	A/D Compare Function Window A/B Status Monitor Register	0x08C	8	R	0x00	0xFF
ADC12	-	-	-	ADCMPCR	A/D Compare Function Control Register	0x090	16	R/W	0x0000	0xFFFF
ADC12	-	-	-	ADCMPANSER	A/D Compare Function Window A Extended Input Select Register	0x092	8	R/W	0x00	0xFF
ADC12	-	-	-	ADCMPLER	A/D Compare Function Window A Extended Input Comparison Condition Setting Register	0x093	8	R/W	0x00	0xFF
ADC12	-	-	-	ADCMPANSR0	A/D Compare Function Window A Channel Select Register 0	0x094	16	R/W	0x0000	0xFFFF
ADC12	-	-	-	ADCMPANSR1	A/D Compare Function Window A Channel Select Register 1	0x096	16	R/W	0x0000	0xFFFF
ADC12	-	-	-	ADCMPLR0	A/D Compare Function Window A Comparison Condition Setting Register 0	0x098	16	R/W	0x0000	0xFFFF
ADC12	-	-	-	ADCMPLR1	A/D Compare Function Window A Comparison Condition Setting Register 1	0x09A	16	R/W	0x0000	0xFFFF
ADC12	2	0x2	0-1	ADCMPDR%s	A/D Compare Function Window A Lower-Side/Upper-Side Level Setting Register	0x09C	16	R/W	0x0000	0xFFFF
ADC12	-	-	-	ADCMPSR0	A/D Compare Function Window A Channel Status Register 0	0x0A0	16	R/W	0x0000	0xFFFF
ADC12	-	-	-	ADCMPSR1	A/D Compare Function Window A Channel Status Register1	0x0A2	16	R/W	0x0000	0xFFFF
ADC12	-	-	-	ADCMPSER	A/D Compare Function Window A Extended Input Channel Status Register	0x0A4	8	R/W	0x00	0xFF
ADC12	-	-	-	ADCMPBNSR	A/D Compare Function Window B Channel Select Register	0x0A6	8	R/W	0x00	0xFF
ADC12	-	-	-	ADWINLLB	A/D Compare Function Window B Lower-Side/Upper-Side Level Setting Register	0x0A8	16	R/W	0x0000	0xFFFF
ADC12	-	-	-	ADWINULB	A/D Compare Function Window B Lower-Side/Upper-Side Level Setting Register	0x0AA	16	R/W	0x0000	0xFFFF
ADC12	-	-	-	ADCMPBSR	A/D Compare Function Window B Status Register	0x0AC	8	R/W	0x00	0xFF
ADC12	-	-	-	ADSSTRL	A/D Sampling State Register	0x0DD	8	R/W	0x0D	0xFF
ADC12	-	-	-	ADSSTRT	A/D Sampling State Register	0x0DE	8	R/W	0x0D	0xFF
ADC12	-	-	-	ADSSTRO	A/D Sampling State Register	0x0DF	8	R/W	0x0D	0xFF
ADC12	9	0x1	0-2, 5-10	ADSSTR%s	A/D Sampling State Register	0x0E0	8	R/W	0x0D	0xFF
SCI0	-	-	-	SMR	Serial Mode Register for Non-Smart Card Interface Mode (SCMR.SMIF = 0)	0x00	8	R/W	0x00	0xFF
SCI0	-	-	-	SMR_SMCI	Serial Mode Register for Smart Card Interface Mode (SCMR.SMIF = 1)	0x00	8	R/W	0x00	0xFF
SCI0	-	-	-	BRR	Bit Rate Register	0x01	8	R/W	0xFF	0xFF
SCI0	-	-	-	SCR	Serial Control Register for Non-Smart Card Interface Mode (SCMR.SMIF = 0)	0x02	8	R/W	0x00	0xFF
SCI0	-	-	-	SCR_SMCI	Serial Control Register for Smart Card Interface Mode (SCMR.SMIF = 1)	0x02	8	R/W	0x00	0xFF

Table A3.4 Register description (9 of 13)

Peripheral name	Dim	Dim inc.	Dim index	Register name	Description	Address offset	Size	R/W	Reset value	Reset mask
SCI0	-	-	-	TDR	Transmit Data Register	0x03	8	R/W	0xFF	0xFF
SCI0	-	-	-	SSR	Serial Status Register for Non-Smart Card Interface and Non-FIFO Mode (SCMR.SMIF = 0 and FCR.FM = 0)	0x04	8	R/W	0x84	0xFF
SCI0	-	-	-	SSR_FIFO	Serial Status Register for Non-Smart Card Interface and FIFO Mode (SCMR.SMIF = 0 and FCR.FM = 1)	0x04	8	R/W	0x80	0xFD
SCI0	-	-	-	SSR_SMCI	Serial Status Register for Smart Card Interface Mode (SCMR.SMIF = 1)	0x04	8	R/W	0x84	0xFF
SCI0	-	-	-	RDR	Receive Data Register	0x05	8	R/W	0x00	0xFF
SCI0	-	-	-	SCMR	Smart Card Mode Register	0x06	8	R/W	0xF2	0xFF
SCI0	-	-	-	SEMR	Serial Extended Mode Register	0x07	8	R/W	0x00	0xFF
SCI0	-	-	-	SNFR	Noise Filter Setting Register	0x08	8	R/W	0x00	0xFF
SCI0	-	-	-	SIMR1	IIC Mode Register 1	0x09	8	R/W	0x00	0xFF
SCI0	-	-	-	SIMR2	IIC Mode Register 2	0x0A	8	R/W	0x00	0xFF
SCI0	-	-	-	SIMR3	IIC Mode Register 3	0x0B	8	R/W	0x00	0xFF
SCI0	-	-	-	SISR	IIC Status Register	0x0C	8	R	0x00	0xCB
SCI0	-	-	-	SPMR	SPI Mode Register	0x0D	8	R/W	0x00	0xFF
SCI0	-	-	-	TDRHL	Transmit Data Register	0x0E	16	R/W	0xFFFF	0xFFFF
SCI0	-	-	-	FRDRHL	Receive FIFO Data Register	0x10	16	R	0x0000	0xFFFF
SCI0	-	-	-	FTDRHL	Transmit FIFO Data Register	0x0E	16	W	0xFFFF	0xFFFF
SCI0	-	-	-	RDRHL	Receive Data Register	0x10	16	R	0x0000	0xFFFF
SCI0	-	-	-	FRDRH	Receive FIFO Data Register	0x10	8	R	0x00	0xFF
SCI0	-	-	-	FTDRH	Transmit FIFO Data Register	0x0E	8	W	0xFF	0xFF
SCI0	-	-	-	FRDRL	Receive FIFO Data Register	0x11	8	R	0x00	0xFF
SCI0	-	-	-	FTDRL	Transmit FIFO Data Register	0x0F	8	W	0xFF	0xFF
SCI0	-	-	-	MDDR	Modulation Duty Register	0x12	8	R/W	0xFF	0xFF
SCI0	-	-	-	DCCR	Data Compare Match Control Register	0x13	8	R/W	0x40	0xFF
SCI0	-	-	-	FCR	FIFO Control Register	0x14	16	R/W	0xF800	0xFFFF
SCI0	-	-	-	FDR	FIFO Data Count Register	0x16	16	R	0x0000	0xFFFF
SCI0	-	-	-	LSR	Line Status Register	0x18	16	R	0x0000	0xFFFF
SCI0	-	-	-	CDR	Compare Match Data Register	0x1A	16	R/W	0x0000	0xFFFF
SCI0	-	-	-	SPTR	Serial Port Register	0x1C	8	R/W	0x03	0xFF
SCI1-2,9	-	-	-	SMR	Serial Mode Register for Non-Smart Card Interface Mode (SCMR.SMIF = 0)	0x00	8	R/W	0x00	0xFF
SCI1-2,9	-	-	-	SMR_SMCI	Serial Mode Register for Smart Card Interface Mode (SCMR.SMIF = 1)	0x00	8	R/W	0x00	0xFF
SCI1-2,9	-	-	-	BRR	Bit Rate Register	0x01	8	R/W	0xFF	0xFF
SCI1-2,9	-	-	-	SCR	Serial Control Register for Non-Smart Card Interface Mode (SCMR.SMIF = 0)	0x02	8	R/W	0x00	0xFF
SCI1-2,9	-	-	-	SCR_SMCI	Serial Control Register for Smart Card Interface Mode (SCMR.SMIF = 1)	0x02	8	R/W	0x00	0xFF
SCI1-2,9	-	-	-	TDR	Transmit Data Register	0x03	8	R/W	0xFF	0xFF
SCI1-2,9	-	-	-	SSR	Serial Status Register for Non-Smart Card Interface and Non-FIFO Mode (SCMR.SMIF = 0 and FCR.FM = 0)	0x04	8	R/W	0x84	0xFF
SCI1-2,9	-	-	-	SSR_SMCI	Serial Status Register for Smart Card Interface Mode (SCMR.SMIF = 1)	0x04	8	R/W	0x84	0xFF
SCI1-2,9	-	-	-	RDR	Receive Data Register	0x05	8	R/W	0x00	0xFF
SCI1-2,9	-	-	-	SCMR	Smart Card Mode Register	0x06	8	R/W	0xF2	0xFF
SCI1-2,9	-	-	-	SEMR	Serial Extended Mode Register	0x07	8	R/W	0x00	0xFF

Table A3.4 Register description (10 of 13)

Peripheral name	Dim	Dim inc.	Dim index	Register name	Description	Address offset	Size	R/W	Reset value	Reset mask
SCI1-2,9	-	-	-	SNFR	Noise Filter Setting Register	0x08	8	R/W	0x00	0xFF
SCI1-2,9	-	-	-	SIMR1	IIC Mode Register 1	0x09	8	R/W	0x00	0xFF
SCI1-2,9	-	-	-	SIMR2	IIC Mode Register 2	0x0A	8	R/W	0x00	0xFF
SCI1-2,9	-	-	-	SIMR3	IIC Mode Register 3	0x0B	8	R/W	0x00	0xFF
SCI1-2,9	-	-	-	SISR	IIC Status Register	0x0C	8	R	0x00	0xCB
SCI1-2,9	-	-	-	SPMR	SPI Mode Register	0x0D	8	R/W	0x00	0xFF
SCI1-2,9	-	-	-	TDRHL	Transmit Data Register	0x0E	16	R/W	0xFFFF	0xFFFF
SCI1-2,9	-	-	-	RDRHL	Receive Data Register	0x10	16	R	0x0000	0xFFFF
SCI1-2,9	-	-	-	MDDR	Modulation Duty Register	0x12	8	R/W	0xFF	0xFF
SCI1-2,9	-	-	-	DCCR	Data Compare Match Control Register	0x13	8	R/W	0x40	0xFF
SCI1-2,9	-	-	-	CDR	Compare Match Data Register	0x1A	16	R/W	0x0000	0xFFFF
SCI1-2,9	-	-	-	SPTR	Serial Port Register	0x1C	8	R/W	0x03	0xFF
SPI0	-	-	-	SPCR	SPI Control Register	0x00	8	R/W	0x00	0xFF
SPI0	-	-	-	SSLP	SPI Slave Select Polarity Register	0x01	8	R/W	0x00	0xFF
SPI0	-	-	-	SPPCR	SPI Pin Control Register	0x02	8	R/W	0x00	0xFF
SPI0	-	-	-	SPSR	SPI Status Register	0x03	8	R/W	0x20	0xFF
SPI0	-	-	-	SPDR	SPI Data Register	0x04	32	R/W	0x00000000	0xFFFFFFFF
SPI0	-	-	-	SPDR_HA	SPI Data Register	0x04	16	R/W	0x0000	0xFFFF
SPI0	-	-	-	SPBR	SPI Bit Rate Register	0x0A	8	R/W	0xFF	0xFF
SPI0	-	-	-	SPDCR	SPI Data Control Register	0x0B	8	R/W	0x00	0xFF
SPI0	-	-	-	SPCKD	SPI Clock Delay Register	0x0C	8	R/W	0x00	0xFF
SPI0	-	-	-	SSLND	SPI Slave Select Negation Delay Register	0x0D	8	R/W	0x00	0xFF
SPI0	-	-	-	SPND	SPI Next-Access Delay Register	0x0E	8	R/W	0x00	0xFF
SPI0	-	-	-	SPCR2	SPI Control Register 2	0x0F	8	R/W	0x00	0xFF
SPI0	-	-	-	SPCMD0	SPI Command Register 0	0x10	16	R/W	0x070D	0xFFFF
CRC	-	-	-	CRCCR0	CRC Control Register 0	0x00	8	R/W	0x00	0xFF
CRC	-	-	-	CRCCR1	CRC Control Register 1	0x01	8	R/W	0x00	0xFF
CRC	-	-	-	CRCDIR	CRC Data Input Register	0x04	32	R/W	0x00000000	0xFFFFFFFF
CRC	-	-	-	CRCDIR_BY	CRC Data Input Register	0x04	8	R/W	0x00	0xFF
CRC	-	-	-	CRCDOR	CRC Data Output Register	0x08	32	R/W	0x00000000	0xFFFFFFFF
CRC	-	-	-	CRCDOR_HA	CRC Data Output Register	0x08	16	R/W	0x0000	0xFFFF
CRC	-	-	-	CRCDOR_BY	CRC Data Output Register	0x08	8	R/W	0x00	0xFF
CRC	-	-	-	CRCSAR	Snoop Address Register	0x0C	16	R/W	0x0000	0xFFFF
GPT320	-	-	-	GTWP	General PWM Timer Write-Protection Register	0x00	32	R/W	0x00000000	0xFFFFFFFF
GPT320	-	-	-	GTSTR	General PWM Timer Software Start Register	0x04	32	R/W	0x00000000	0xFFFFFFFF
GPT320	-	-	-	GTSTP	General PWM Timer Software Stop Register	0x08	32	R/W	0xFFFFFFFF	0xFFFFFFFF
GPT320	-	-	-	GTCLR	General PWM Timer Software Clear Register	0x0C	32	W	0x00000000	0xFFFFFFFF
GPT320	-	-	-	GTSSR	General PWM Timer Start Source Select Register	0x10	32	R/W	0x00000000	0xFFFFFFFF
GPT320	-	-	-	GTPSR	General PWM Timer Stop Source Select Register	0x14	32	R/W	0x00000000	0xFFFFFFFF
GPT320	-	-	-	GTCSR	General PWM Timer Clear Source Select Register	0x18	32	R/W	0x00000000	0xFFFFFFFF
GPT320	-	-	-	GTUPSR	General PWM Timer Up Count Source Select Register	0x1C	32	R/W	0x00000000	0xFFFFFFFF

Table A3.4 Register description (11 of 13)

Peripheral name	Dim	Dim inc.	Dim index	Register name	Description	Address offset	Size	R/W	Reset value	Reset mask
GPT320	-	-	-	GTDNSR	General PWM Timer Down Count Source Select Register	0x20	32	R/W	0x00000000	0xFFFFFFFF
GPT320	-	-	-	GTICASR	General PWM Timer Input Capture Source Select Register A	0x24	32	R/W	0x00000000	0xFFFFFFFF
GPT320	-	-	-	GTICBSR	General PWM Timer Input Capture Source Select Register B	0x28	32	R/W	0x00000000	0xFFFFFFFF
GPT320	-	-	-	GTCR	General PWM Timer Control Register	0x2C	32	R/W	0x00000000	0xFFFFFFFF
GPT320	-	-	-	GTUDDTYC	General PWM Timer Count Direction and Duty Setting Register	0x30	32	R/W	0x00000001	0xFFFFFFFF
GPT320	-	-	-	GTIOR	General PWM Timer I/O Control Register	0x34	32	R/W	0x00000000	0xFFFFFFFF
GPT320	-	-	-	GTINTAD	General PWM Timer Interrupt Output Setting Register	0x38	32	R/W	0x00000000	0xFFFFFFFF
GPT320	-	-	-	GTST	General PWM Timer Status Register	0x3C	32	R/W	0x00008000	0xFFFFFFFF
GPT320	-	-	-	GTBER	General PWM Timer Buffer Enable Register	0x40	32	R/W	0x00000000	0xFFFFFFFF
GPT320	-	-	-	GTCNT	General PWM Timer Counter	0x48	32	R/W	0x00000000	0xFFFFFFFF
GPT320	-	-	-	GTCCRA	General PWM Timer Compare Capture Register A	0x4C	32	R/W	0xFFFFFFFF	0xFFFFFFFF
GPT320	-	-	-	GTCCRB	General PWM Timer Compare Capture Register B	0x50	32	R/W	0xFFFFFFFF	0xFFFFFFFF
GPT320	-	-	-	GTCCRC	General PWM Timer Compare Capture Register C	0x54	32	R/W	0xFFFFFFFF	0xFFFFFFFF
GPT320	-	-	-	GTCCRE	General PWM Timer Compare Capture Register E	0x58	32	R/W	0xFFFFFFFF	0xFFFFFFFF
GPT320	-	-	-	GTCCRD	General PWM Timer Compare Capture Register D	0x5C	32	R/W	0xFFFFFFFF	0xFFFFFFFF
GPT320	-	-	-	GTCCRF	General PWM Timer Compare Capture Register F	0x60	32	R/W	0xFFFFFFFF	0xFFFFFFFF
GPT320	-	-	-	GTPR	General PWM Timer Cycle Setting Register	0x64	32	R/W	0xFFFFFFFF	0xFFFFFFFF
GPT320	-	-	-	GTPBR	General PWM Timer Cycle Setting Buffer Register	0x68	32	R/W	0xFFFFFFFF	0xFFFFFFFF
GPT320	-	-	-	GTDTCR	General PWM Timer Dead Time Control Register	0x88	32	R/W	0x00000000	0xFFFFFFFF
GPT320	-	-	-	GTDVU	General PWM Timer Dead Time Value Register U	0x8C	32	R/W	0xFFFFFFFF	0xFFFFFFFF
GPT164-9	-	-	-	GTWP	General PWM Timer Write-Protection Register	0x00	32	R/W	0x00000000	0xFFFFFFFF
GPT164-9	-	-	-	GTSTR	General PWM Timer Software Start Register	0x04	32	R/W	0x00000000	0xFFFFFFFF
GPT164-9	-	-	-	GTSTP	General PWM Timer Software Stop Register	0x08	32	R/W	0xFFFFFFFF	0xFFFFFFFF
GPT164-9	-	-	-	GTCLR	General PWM Timer Software Clear Register	0x0C	32	W	0x00000000	0xFFFFFFFF
GPT164-9	-	-	-	GTSSR	General PWM Timer Start Source Select Register	0x10	32	R/W	0x00000000	0xFFFFFFFF
GPT164-9	-	-	-	GTPSR	General PWM Timer Stop Source Select Register	0x14	32	R/W	0x00000000	0xFFFFFFFF
GPT164-9	-	-	-	GTCSR	General PWM Timer Clear Source Select Register	0x18	32	R/W	0x00000000	0xFFFFFFFF
GPT164-9	-	-	-	GTUPSR	General PWM Timer Up Count Source Select Register	0x1C	32	R/W	0x00000000	0xFFFFFFFF
GPT164-9	-	-	-	GTDNSR	General PWM Timer Down Count Source Select Register	0x20	32	R/W	0x00000000	0xFFFFFFFF
GPT164-9	-	-	-	GTICASR	General PWM Timer Input Capture Source Select Register A	0x24	32	R/W	0x00000000	0xFFFFFFFF

Table A3.4 Register description (12 of 13)

Peripheral name	Dim	Dim inc.	Dim index	Register name	Description	Address offset	Size	R/W	Reset value	Reset mask
GPT164-9	-	-	-	GTICBSR	General PWM Timer Input Capture Source Select Register B	0x28	32	R/W	0x00000000	0xFFFFFFFF
GPT164-9	-	-	-	GTCR	General PWM Timer Control Register	0x2C	32	R/W	0x00000000	0xFFFFFFFF
GPT164-9	-	-	-	GTUDDTYC	General PWM Timer Count Direction and Duty Setting Register	0x30	32	R/W	0x00000001	0xFFFFFFFF
GPT164-9	-	-	-	GTIOR	General PWM Timer I/O Control Register	0x34	32	R/W	0x00000000	0xFFFFFFFF
GPT164-9	-	-	-	GTINTAD	General PWM Timer Interrupt Output Setting Register	0x38	32	R/W	0x00000000	0xFFFFFFFF
GPT164-9	-	-	-	GTST	General PWM Timer Status Register	0x3C	32	R/W	0x00008000	0xFFFFFFFF
GPT164-9	-	-	-	GTBER	General PWM Timer Buffer Enable Register	0x40	32	R/W	0x00000000	0xFFFFFFFF
GPT164-9	-	-	-	GTCNT	General PWM Timer Counter	0x48	32	R/W	0x00000000	0xFFFFFFFF
GPT164-9	-	-	-	GTCCRA	General PWM Timer Compare Capture Register A	0x4C	32	R/W	0xFFFFFFFF	0xFFFFFFFF
GPT164-9	-	-	-	GTCCRB	General PWM Timer Compare Capture Register B	0x50	32	R/W	0xFFFFFFFF	0xFFFFFFFF
GPT164-9	-	-	-	GTCCRC	General PWM Timer Compare Capture Register C	0x54	32	R/W	0xFFFFFFFF	0xFFFFFFFF
GPT164-9	-	-	-	GTCCRE	General PWM Timer Compare Capture Register E	0x58	32	R/W	0xFFFFFFFF	0xFFFFFFFF
GPT164-9	-	-	-	GTCCRD	General PWM Timer Compare Capture Register D	0x5C	32	R/W	0xFFFFFFFF	0xFFFFFFFF
GPT164-9	-	-	-	GTCCRF	General PWM Timer Compare Capture Register F	0x60	32	R/W	0xFFFFFFFF	0xFFFFFFFF
GPT164-9	-	-	-	GTPR	General PWM Timer Cycle Setting Register	0x64	32	R/W	0xFFFFFFFF	0xFFFFFFFF
GPT164-9	-	-	-	GTPBR	General PWM Timer Cycle Setting Buffer Register	0x68	32	R/W	0xFFFFFFFF	0xFFFFFFFF
GPT164-9	-	-	-	GTDTCR	General PWM Timer Dead Time Control Register	0x88	32	R/W	0x00000000	0xFFFFFFFF
GPT164-9	-	-	-	GTDVU	General PWM Timer Dead Time Value Register U	0x8C	32	R/W	0xFFFFFFFF	0xFFFFFFFF
GPT_OPS	-	-	-	OPSCR	Output Phase Switching Control Register	0x00	32	R/W	0x00000000	0xFFFFFFFF
KINT	-	-	-	KRCTL	Key Return Control Register	0x00	8	R/W	0x00	0xFF
KINT	-	-	-	KRF	Key Return Flag Register	0x04	8	R/W	0x00	0xFF
KINT	-	-	-	KRM	Key Return Mode Register	0x08	8	R/W	0x00	0xFF
AGT0-1	-	-	-	AGT	AGT Counter Register	0x00	16	R/W	0xFFFF	0xFFFF
AGT0-1	-	-	-	AGTCMB	AGT Compare Match B Register	0x04	16	R/W	0xFFFF	0xFFFF
AGT0-1	-	-	-	AGTCMA	AGT Compare Match A Register	0x02	16	R/W	0xFFFF	0xFFFF
AGT0-1	-	-	-	AGTCR	AGT Control Register	0x08	8	R/W	0x00	0xFF
AGT0-1	-	-	-	AGTMR1	AGT Mode Register 1	0x09	8	R/W	0x00	0xFF
AGT0-1	-	-	-	AGTMR2	AGT Mode Register 2	0x0A	8	R/W	0x00	0xFF
AGT0-1	-	-	-	AGTIOC	AGT I/O Control Register	0x0C	8	R/W	0x00	0xFF
AGT0-1	-	-	-	AGTISR	AGT Event Pin Select Register	0x0D	8	R/W	0x00	0xFF
AGT0-1	-	-	-	AGTCMSR	AGT Compare Match Function Select Register	0x0E	8	R/W	0x00	0xFF
AGT0-1	-	-	-	AGTIOSEL	AGT Pin Select Register	0x00F	8	R/W	0x00	0xFF
FLCN	-	-	-	DFLCTL	Data Flash Enable Register	0x0090	8	R/W	0x00	0xFF
FLCN	-	-	-	TSCDR	Temperature Sensor Calibration Data Register	0x0228	16	R	Unique value for each chip	0x0000
FLCN	-	-	-	CTSUTRIMA	CTSU Trimming Register A	0x03A4	32	R/W	Unique value for each chip	0x00000000

Table A3.4 Register description (13 of 13)

Peripheral name	Dim	Dim inc.	Dim index	Register name	Description	Address offset	Size	R/W	Reset value	Reset mask
FLCN	-	-	-	FLDWAITR	Memory Wait Cycle Control Register for Data Flash	0x3FC4	8	R/W	0x00	0xFF
FLCN	-	-	-	PFBER	Prefetch Buffer Enable Register	0x3FC8	8	R/W	0x00	0xFF

Note: Peripheral name = Name of peripheral
Dim = Number of elements in an array of registers
Dim inc. = Address increment between two simultaneous registers of a register array in the address map
Dim index = Sub string that replaces the %s placeholder within the register name
Register name = Name of register
Description = Register description
Address offset = Address of the register relative to the base address defined by the peripheral of the register
Size = Bit width of the register
Reset value = Default reset value of a register
Reset mask = Identifies which register bits have a defined reset value

Revision History

Revision 1.00 — July 31, 2023

Initial release

Revision 1.10 — November 28, 2023

1. Overview:
- Updated Figure 1.2 Part numbering scheme.

2. Electrical Characteristics:
- Updated Table 2.4 I/O V_{IH}, V_{IL}.

Revision 1.20 — September 3, 2024

2. Electrical Characteristics:
- Added section 2.2.7 Thermal Characteristics
- Updated Table 2.23 Timing of recovery from low power modes (2) and (3).

Appendix 3. I/O Registers:
- Updated LPOPT reset value in Table 3.4 Register description.

Revision 1.30 — November 8, 2025

No change.

General Precautions in the Handling of Microprocessing Unit and Microcontroller Unit Products

The following usage notes are applicable to all Microprocessing unit and Microcontroller unit products from Renesas. For detailed usage notes on the products covered by this document, refer to the relevant sections of the document as well as any technical updates that have been issued for the products.

1. Precaution against Electrostatic Discharge (ESD)
   A strong electrical field, when exposed to a CMOS device, can cause destruction of the gate oxide and ultimately degrade the device operation. Steps must be taken to stop the generation of static electricity as much as possible, and quickly dissipate it when it occurs. Environmental control must be adequate. When it is dry, a humidifier should be used. This is recommended to avoid using insulators that can easily build up static electricity. Semiconductor devices must be stored and transported in an anti-static container, static shielding bag or conductive material. All test and measurement tools including work benches and floors must be grounded. The operator must also be grounded using a wrist strap. Semiconductor devices must not be touched with bare hands. Similar precautions must be taken for printed circuit boards with mounted semiconductor devices.
2. Processing at power-on
   The state of the product is undefined at the time when power is supplied. The states of internal circuits in the LSI are indeterminate and the states of register settings and pins are undefined at the time when power is supplied. In a finished product where the reset signal is applied to the external reset pin, the states of pins are not guaranteed from the time when power is supplied until the reset process is completed. In a similar way, the states of pins in a product that is reset by an on-chip power-on reset function are not guaranteed from the time when power is supplied until the power reaches the level at which resetting is specified.
3. Input of signal during power-off state
   Do not input signals or an I/O pull-up power supply while the device is powered off. The current injection that results from input of such a signal or I/O pull-up power supply may cause malfunction and the abnormal current that passes in the device at this time may cause degradation of internal elements. Follow the guideline for input signal during power-off state as described in your product documentation.
4. Handling of unused pins
   Handle unused pins in accordance with the directions given under handling of unused pins in the manual. The input pins of CMOS products are generally in the high-impedance state. In operation with an unused pin in the open-circuit state, extra electromagnetic noise is induced in the vicinity of the LSI, an associated shoot-through current flows internally, and malfunctions occur due to the false recognition of the pin state as an input signal become possible.
5. Clock signals
   After applying a reset, only release the reset line after the operating clock signal becomes stable. When switching the clock signal during program execution, wait until the target clock signal is stabilized. When the clock signal is generated with an external resonator or from an external oscillator during a reset, ensure that the reset line is only released after full stabilization of the clock signal. Additionally, when switching to a clock signal produced with an external resonator or by an external oscillator while program execution is in progress, wait until the target clock signal is stable.
6. Voltage application waveform at input pin
   Waveform distortion due to input noise or a reflected wave may cause malfunction. If the input of the CMOS device stays in the area between V_{IL} (Max.) and V_{IH} (Min.) due to noise, for example, the device may malfunction. Take care to prevent chattering noise from entering the device when the input level is fixed, and also in the transition period when the input level passes through the area between V_{IL} (Max.) and V_{IH} (Min.).
7. Prohibition of access to reserved addresses
   Access to reserved addresses is prohibited. The reserved addresses are provided for possible future expansion of functions. Do not access these addresses as the correct operation of the LSI is not guaranteed.
8. Differences between products
   Before changing from one product to another, for example to a product with a different part number, confirm that the change will not lead to problems. The characteristics of a microprocessing unit or microcontroller unit products in the same group but having a different part number might differ in terms of internal memory capacity, layout pattern, and other factors, which can affect the ranges of electrical characteristics, such as characteristic values, operating margins, immunity to noise, and amount of radiated noise. When changing to a product with a different part number, implement a system-evaluation test for the given product.

Notice

1. Descriptions of circuits, software and other related information in this document are provided only to illustrate the operation of semiconductor products and application examples. You are fully responsible for the incorporation or any other use of the circuits, software, and information in the design of your product or system. Renesas Electronics disclaims any and all liability for any losses and damages incurred by you or third parties arising from the use of these circuits, software, or information.
2. Renesas Electronics hereby expressly disclaims any warranties against and liability for infringement or any other claims involving patents, copyrights, or other intellectual property rights of third parties, by or arising from the use of Renesas Electronics products or technical information described in this document, including but not limited to, the product data, drawings, charts, programs, algorithms, and application examples.
3. No license, express, implied or otherwise, is granted hereby under any patents, copyrights or other intellectual property rights of Renesas Electronics or others.
4. You shall be responsible for determining what licenses are required from any third parties, and obtaining such licenses for the lawful import, export, manufacture, sales, utilization, distribution or other disposal of any products incorporating Renesas Electronics products, if required.
5. You shall not alter, modify, copy, or reverse engineer any Renesas Electronics product, whether in whole or in part. Renesas Electronics disclaims any and all liability for any losses or damages incurred by you or third parties arising from such alteration, modification, copying or reverse engineering.
6. Renesas Electronics products are classified according to the following two quality grades: “Standard” and “High Quality”. The intended applications for each Renesas Electronics product depends on the product’s quality grade, as indicated below.
   "Standard": Computers; office equipment; communications equipment; test and measurement equipment; audio and visual equipment; home electronic appliances; machine tools; personal electronic equipment; industrial robots; etc.
   "High Quality": Transportation equipment (automobiles, trains, ships, etc.); traffic control (traffic lights); large-scale communication equipment; key financial terminal systems; safety control equipment; etc.
   Unless expressly designated as a high reliability product or a product for harsh environments in a Renesas Electronics data sheet or other Renesas Electronics document, Renesas Electronics products are not intended or authorized for use in products or systems that may pose a direct threat to human life or bodily injury (artificial life support devices or systems; surgical implantations; etc.), or may cause serious property damage (space system; undersea repeaters; nuclear power control systems; aircraft control systems; key plant systems; military equipment; etc.). Renesas Electronics disclaims any and all liability for any damages or losses incurred by you or any third parties arising from the use of any Renesas Electronics product that is inconsistent with any Renesas Electronics data sheet, user’s manual or other Renesas Electronics document.
7. No semiconductor product is absolutely secure. Notwithstanding any security measures or features that may be implemented in Renesas Electronics hardware or software products, Renesas Electronics shall have absolutely no liability arising out of any vulnerability or security breach, including but not limited to any unauthorized access to or use of a Renesas Electronics product or a system that uses a Renesas Electronics product. RENESAS ELECTRONICS DOES NOT WARRANT OR GUARANTEE THAT RENESAS ELECTRONICS PRODUCTS, OR ANY SYSTEMS CREATED USING RENESAS ELECTRONICS PRODUCTS WILL BE INVULNERABLE OR FREE FROM CORRUPTION, ATTACK, VIRUSES, INTERFERENCE, HACKING, DATA LOSS OR THEFT, OR OTHER SECURITY INTRUSION (“Vulnerability Issues”). RENESAS ELECTRONICS DISCLAIMS ANY AND ALL RESPONSIBILITY OR LIABILITY ARISING FROM OR RELATED TO ANY VULNERABILITY ISSUES. FURTHERMORE, TO THE EXTENT PERMITTED BY APPLICABLE LAW, RENESAS ELECTRONICS DISCLAIMS ANY AND ALL WARRANTIES, EXPRESS OR IMPLIED, WITH RESPECT TO THIS DOCUMENT AND ANY RELATED OR ACCOMPANYING SOFTWARE OR HARDWARE, INCLUDING BUT NOT LIMITED TO THE IMPLIED WARRANTIES OF MERCHANTABILITY, OR FITNESS FOR A PARTICULAR PURPOSE.
8. When using Renesas Electronics products, refer to the latest product information (data sheets, user’s manuals, application notes, “General Notes for Handling and Using Semiconductor Devices” in the reliability handbook, etc.), and ensure that usage conditions are within the ranges specified by Renesas Electronics with respect to maximum ratings, operating power supply voltage range, heat dissipation characteristics, installation, etc. Renesas Electronics disclaims any and all liability for any malfunctions, failure or accident arising out of the use of Renesas Electronics products outside of such specified ranges.
9. Although Renesas Electronics endeavors to improve the quality and reliability of Renesas Electronics products, semiconductor products have specific characteristics, such as the occurrence of failure at a certain rate and malfunctions under certain use conditions. Unless designated as a high reliability product or a product for harsh environments in a Renesas Electronics data sheet or other Renesas Electronics document, Renesas Electronics products are not subject to radiation resistance design. You are responsible for implementing safety measures to guard against the possibility of bodily injury, injury or damage caused by fire, and/or danger to the public in the event of a failure or malfunction of Renesas Electronics products, such as safety design for hardware and software, including but not limited to redundancy, fire control and malfunction prevention, appropriate treatment for aging degradation or any other appropriate measures. Because the evaluation of microcomputer software alone is very difficult and impractical, you are responsible for evaluating the safety of the final products or systems manufactured by you.
10. Please contact a Renesas Electronics sales office for details as to environmental matters such as the environmental compatibility of each Renesas Electronics product. You are responsible for carefully and sufficiently investigating applicable laws and regulations that regulate the inclusion or use of controlled substances, including without limitation, the EU RoHS Directive, and using Renesas Electronics products in compliance with all these applicable laws and regulations. Renesas Electronics disclaims any and all liability for damages or losses occurring as a result of your noncompliance with applicable laws and regulations.
11. Renesas Electronics products and technologies shall not be used for or incorporated into any products or systems whose manufacture, use, or sale is prohibited under any applicable domestic or foreign laws or regulations. You shall comply with any applicable export control laws and regulations promulgated and administered by the governments of any countries asserting jurisdiction over the parties or transactions.
12. It is the responsibility of the buyer or distributor of Renesas Electronics products, or any other party who distributes, disposes of, or otherwise sells or transfers the product to a third party, to notify such third party in advance of the contents and conditions set forth in this document.
13. This document shall not be reprinted, reproduced or duplicated in any form, in whole or in part, without prior written consent of Renesas Electronics.
14. Please contact a Renesas Electronics sales office if you have any questions regarding the information contained in this document or Renesas Electronics products.

(Note1) “Renesas Electronics” as used in this document means Renesas Electronics Corporation and also includes its directly or indirectly controlled subsidiaries.
(Note2) “Renesas Electronics product(s)” means any product developed or manufactured by or for Renesas Electronics.

(Rev.5.0-1 October 2020)

Corporate Headquarters

TOYOSU FORESIA, 3-2-24 Toyosu,
Koto-ku, Tokyo 135-0061, Japan
www.renesas.com

Contact Information

For further information on a product, technology, the most up-to-date version of a document, or your nearest sales office, please visit:
www.renesas.com/contact/

Trademarks

Renesas and the Renesas logo are trademarks of Renesas Electronics Corporation. All trademarks and registered trademarks are the property of their respective owners.

© 2025 Renesas Electronics Corporation. All rights reserved.