Datasheet

32

Renesas RA6M1 Group

Datasheet

32-bit MCU

Renesas Advanced (RA) Family
Renesas RA6 Series

All information contained in these materials, including products and product specifications, represents information on the product at the time of publication and is subject to change by Renesas Electronics Corp. without notice. Please review the latest information published by Renesas Electronics Corp. through various means, including the Renesas Electronics Corp. website (http://www.renesas.com).

Renesas Electronics
www.renesas.com

Rev.1.20 Dec 2022

Leading performance 120-MHz Arm® Cortex®-M4 core, 512-KB code flash memory, 256-KB SRAM, Capacitive Touch Sensing Unit, USB 2.0 Full-Speed, SDHI, Quad SPI, security and safety features, and advanced analog.

Features

■ Arm Cortex-M4 Core with Floating Point Unit (FPU)
- Armv7E-M architecture with DSP instruction set
- Maximum operating frequency: 120 MHz
- Support for 4-GB address space
- On-chip debugging system: JTAG, SWD, and ETM
- Boundary scan and Arm Memory Protection Unit (Arm MPU)

■ Memory
- 512-KB code flash memory (40 MHz zero wait states)
- 8-KB data flash memory (125,000 erase/write cycles)
- 256-KB SRAM
- Flash Cache (FCACHE)
- Memory Protection Units (MPU)
- Memory Mirror Function (MMF)
- 128-bit unique ID

■ Connectivity
- USB 2.0 Full-Speed (USBFS) module
  - On-chip transceiver
- Serial Communications Interface (SCI) with FIFO × 7
- Serial Peripheral Interface (SPI) × 2
- I^2C bus interface (IIC) × 2
- CAN module (CAN) × 2
- Serial Sound Interface Enhanced (SSIE)
- SD/MMC Host Interface (SDHI) × 2
- Quad Serial Peripheral Interface (QSPI)
- IrDA interface
- Sampling Rate Converter (SRC)
- External address space
  - 8-bit bus space

■ Analog
- 12-bit A/D Converter (ADC12) with 3 sample-and-hold circuits each × 2
- 12-bit D/A Converter (DAC12) × 2
- High-Speed Analog Comparator (ACMPHS) × 6
- Programmable Gain Amplifier (PGA) × 6
- Temperature Sensor (TSN)

■ Timers
- General PWM Timer 32-bit Enhanced High Resolution (GPT32EH) × 4
- General PWM Timer 32-bit Enhanced (GPT32E) × 4
- General PWM Timer 32-bit (GPT32) × 5
- Low Power Asynchronous General-Purpose Timer (AGT) × 2
- Watchdog Timer (WDT)

■ Safety
- Error Code Correction (ECC) in SRAM
- SRAM parity error check
- Flash area protection
- ADC self-diagnosis function
- Clock Frequency Accuracy Measurement Circuit (CAC)
- Cyclic Redundancy Check (CRC) calculator
- Data Operation Circuit (DOC)
- Port Output Enable for GPT (POEG)
- Independent Watchdog Timer (IWDT)
- GPIO readback level detection
- Register write protection
- Main oscillator stop detection
- Illegal memory access

■ System and Power Management
- Low power modes
- Realtime Clock (RTC) with calendar and VBATT support
- Event Link Controller (ELC)
- DMA Controller (DMAC) × 8
- Data Transfer Controller (DTC)
- Key Interrupt Function (KINT)
- Power-on reset
- Low Voltage Detection (LVD) with voltage settings

■ Security and Encryption
- AES128/192/256
- 3DES/ARC4
- SHA1/SHA224/SHA256/MD5
- GHASH
- RSA/DSA/ECC
- True Random Number Generator (TRNG)

■ Human Machine Interface (HMI)
- Capacitive Touch Sensing Unit (CTSU)

■ Multiple Clock Sources
- Main clock oscillator (MOSC) (8 to 24 MHz)
- Sub-clock oscillator (SOSC) (32.768 kHz)
- High-speed on-chip oscillator (HOCO) (16/18/20 MHz)
- Middle-speed on-chip oscillator (MOCO) (8 MHz)
- Low-speed on-chip oscillator (LOCO) (32.768 kHz)
- IWDT-dedicated on-chip oscillator (15 kHz)
- Clock trim function for HOCO/MOCO/LOCO
- Clock out support

■ General-Purpose I/O Ports
- Up to 76 input/output pins
  - Up to 9 CMOS input
  - Up to 67 CMOS input/output
    - Up to 14 input/output 5 V tolerant
    - Up to 13 high current (20 mA)

■ Operating Voltage
- VCC: 2.7 to 3.6 V

■ Operating Temperature and Packages
- Ta = -40°C to +105°C
  - 100-pin LGA (7 mm × 7 mm, 0.65 mm pitch)
  - 100-pin LQFP (14 mm × 14 mm, 0.5 mm pitch)
  - 64-pin LQFP (10 mm × 10 mm, 0.5 mm pitch)
  - 64-pin QFN (8 mm × 8 mm, 0.4 mm pitch)

1. Overview

The MCU integrates multiple series of software- and pin-compatible Arm®-based 32-bit cores that share a common set of Renesas peripherals to facilitate design scalability and efficient platform-based product development.

The MCU in this series incorporates a high-performance Arm Cortex®-M4 core running up to 120 MHz with the following features:

- 512-KB code flash memory
- 256-KB SRAM
- Capacitive Touch Sensing Unit (CTSU)
- USBFS
- SD/MMC Host Interface
- Quad Serial Peripheral Interface (QSPI)
- Security and safety features
- 12-bit A/D Converter (ADC12)
- 12-bit D/A Converter (DAC12)
- Analog peripherals.

1.1 Function Outline

Table 1.1 Arm core

Feature	Functional description
Arm Cortex-M4 core	• Maximum operating frequency: up to 120 MHz • Arm Cortex-M4 core: - Revision: r0p1-01rel0 - Armv7E-M architecture profile - Single precision floating-point unit compliant with the ANSI/IEEE Std 754-2008. • Arm Memory Protection Unit (Arm MPU): - Armv7 Protected Memory System Architecture - 8 protect regions. • SysTick timer: - Driven by SYSTICCLK (LOCO) or ICLK.

Table 1.2 Memory

Feature	Functional description
Code flash memory	512-KB code flash memory. See section 50, Flash Memory in User's Manual.
Data flash memory	8-KB data flash memory. See section 50, Flash Memory in User's Manual.
Memory Mirror Function (MMF)	The Memory Mirror Function (MMF) can be configured to mirror the target application image load address in code flash memory to the application image link address in the 23-bit unused memory space (memory mirror space addresses). Your application code is developed and linked to run from this MMF destination address. Your application code does not need to know the load location where it is stored in code flash memory. See section 5, Memory Mirror Function (MMF) in User's Manual.
Option-setting memory	The option-setting memory determines the state of the MCU after a reset. See section 7, Option-Setting Memory in User's Manual.
SRAM	On-chip high-speed SRAM with either parity-bit or Error Correction Code (ECC). The first 32 KB of SRAM0 provides error correction capability using ECC. Parity check is performed for other areas. See section 48, SRAM in User's Manual.
Standby SRAM	On-chip SRAM that can retain data in Deep Software Standby mode. See section 49, Standby SRAM in User's Manual.

Table 1.3 System (1 of 2)

Feature	Functional description
Operating modes	Two operating modes: • Single-chip mode • SCI or USB boot mode. See section 3, Operating Modes in User's Manual.
Resets	14 resets: • RES pin reset • Power-on reset • Voltage monitor 0 reset • Voltage monitor 1 reset • Voltage monitor 2 reset • Independent watchdog timer reset • Watchdog timer reset • Deep Software Standby reset • SRAM parity error reset • SRAM ECC error reset • Bus master MPU error reset • Bus slave MPU error reset • Stack pointer error reset • Software reset. See section 6, Resets in User's Manual.
Low Voltage Detection (LVD)	The Low Voltage Detection (LVD) function monitors the voltage level input to the VCC pin, and the detection level can be selected using a software program. See section 8, Low Voltage Detection (LVD) in User's Manual.
Clocks	• Main clock oscillator (MOSC) • Sub-clock oscillator (SOSC) • High-speed on-chip oscillator (HOCO) • Middle-speed on-chip oscillator (MOCO) • Low-speed on-chip oscillator (LOCO) • PLL frequency synthesizer • IDWT-dedicated on-chip oscillator • Clock out support. See section 9, Clock Generation Circuit in User's Manual.
Clock Frequency Accuracy Measurement Circuit (CAC)	The Clock Frequency Accuracy Measurement Circuit (CAC) counts pulses of the clock to be measured (measurement target clock) within the time generated by the clock to be used as a measurement reference (measurement reference clock), and determines the accuracy depending on whether the number of pulses is within the allowable range. When measurement is complete or the number of pulses within the time generated by the measurement reference clock is not within the allowable range, an interrupt request is generated. See section 10, Clock Frequency Accuracy Measurement Circuit (CAC) in User's Manual.
Interrupt Controller Unit (ICU)	The Interrupt Controller Unit (ICU) controls which event signals are linked to the NVIC/DTC module and DMAC module. The ICU also controls NMI interrupts. See section 14, Interrupt Controller Unit (ICU) in User's Manual.
Key Interrupt Function (KINT)	A key interrupt can be generated by setting the Key Return Mode Register (KRM) and inputting a rising or falling edge to the key interrupt input pins. See section 21, Key Interrupt Function (KINT) in User's Manual.
Low power modes	Power consumption can be reduced in multiple ways, such as by setting clock dividers, controlling EBCLK output, stopping modules, selecting power control mode in normal operation, and transitioning to low power modes. See section 11, Low Power Modes in User's Manual.
Battery backup function	A battery backup function is provided for partial powering by a battery. The battery-powered area includes the RTC, SOSC, backup memory, and switch between VCC and VBATT. See section 12, Battery Backup Function in User's Manual.
Register write protection	The register write protection function protects important registers from being overwritten because of software errors. See section 13, Register Write Protection in User's Manual.
Memory Protection Unit (MPU)	Four Memory Protection Units (MPUs) and a CPU stack pointer monitor function are provided for memory protection. See section 16, Memory Protection Unit (MPU) in User's Manual.

Table 1.3 System (2 of 2)

Feature	Functional description
Watchdog Timer (WDT)	The Watchdog Timer (WDT) is a 14-bit down-counter that can be used to reset the MCU when the counter underflows because the system has run out of control and is unable to refresh the WDT. In addition, a non-maskable interrupt or interrupt can be generated by an underflow. A refresh-permitted period can be set to refresh the counter and used as the condition for detecting when the system runs out of control. See section 27, Watchdog Timer (WDT) in User's Manual.
Independent Watchdog Timer (IWDT)	The Independent Watchdog Timer (IWDT) consists of a 14-bit down-counter that must be serviced periodically to prevent counter underflow. The IWDT provides functionality to reset the MCU or to generate a non-maskable interrupt or interrupt for a timer underflow. Because the timer operates with an independent, dedicated clock source, it is particularly useful in returning the MCU to a known state as a fail-safe mechanism when the system runs out of control. The IWDT can be triggered automatically on a reset, underflow, or refresh error, or by a refresh of the count value in the registers. See section 28, Independent Watchdog Timer (IWDT) in User's Manual.

Table 1.4 Event link

Feature	Functional description
Event Link Controller (ELC)	The Event Link Controller (ELC) uses the interrupt requests generated by various peripheral modules as event signals to connect them to different modules, enabling direct interaction between the modules without CPU intervention. See section 19, Event Link Controller (ELC) in User's Manual.

Table 1.5 Direct memory access

Feature	Functional description
Data Transfer Controller (DTC)	A Data Transfer Controller (DTC) module is provided for transferring data when activated by an interrupt request. See section 18, Data Transfer Controller (DTC) in User's Manual.
DMA Controller (DMAC)	An 8-channel DMA Controller (DMAC) module is provided for transferring data without the CPU. When a DMA transfer request is generated, the DMAC transfers data stored at the transfer source address to the transfer destination address. See section 17, DMA Controller (DMAC) in User's Manual.

Table 1.6 External bus interface

Feature	Functional description
External buses	• CS area (EXBIU): Connected to the external devices (external memory interface) • QSPI area (EXBIUT2): Connected to the QSPI (external device interface).

Table 1.7 Timers (1 of 2)

Feature	Functional description
General PWM Timer (GPT)	The General PWM Timer (GPT) is a 32-bit timer with 13 channels. PWM waveforms can be generated by controlling the up-counter, down-counter, or up- and down-counter. In addition, PWM waveforms can be generated for controlling brushless DC motors. The GPT can also be used as a general-purpose timer. See section 23, General PWM Timer (GPT) in User's Manual.
Port Output Enable for GPT (POEG)	Use the Port Output Enable for GPT (POEG) function to place the General PWM Timer (GPT) output pins in the output disable state. See section 22, Port Output Enable for GPT (POEG) in User's Manual.
Low Power Asynchronous General-Purpose Timer (AGT)	The Low Power Asynchronous General Purpose Timer (AGT) is a 16-bit timer that can be used for pulse output, external pulse width or period measurement, and counting of external events. This 16-bit timer consists of a reload register and a down-counter. The reload register and the down-counter are allocated to the same address, and can be accessed with the AGT register. See section 25, Low Power Asynchronous General-Purpose Timer (AGT) in User's Manual.

Table 1.7 Timers (2 of 2)

Feature	Functional description
Realtime Clock (RTC)	The Realtime Clock (RTC) has two counting modes, calendar count mode and binary count mode, that are controlled by the register settings. For calendar count mode, the RTC has a 100-year calendar from 2000 to 2099 and automatically adjusts dates for leap years. For binary count mode, the RTC counts seconds and retains the information as a serial value. Binary count mode can be used for calendars other than the Gregorian (Western) calendar. See section 26, Realtime Clock (RTC) in User's Manual.

Table 1.8 Communication interfaces (1 of 2)

Feature	Functional description
Serial Communications Interface (SCI)	The Serial Communications Interface (SCI) is configurable to five asynchronous and synchronous serial interfaces: • Asynchronous interfaces (UART and Asynchronous Communications Interface Adapter (ACIA)) • 8-bit clock synchronous interface • Simple IIC (master-only) • Simple SPI • Smart card interface. The smart card interface complies with the ISO/IEC 7816-3 standard for electronic signals and transmission protocol. Each SCI has FIFO buffers to enable continuous and full-duplex communication, and the data transfer speed can be configured independently using an on-chip baud rate generator. See section 30, Serial Communications Interface (SCI) in User's Manual.
IrDA Interface (IrDA)	The IrDA interface sends and receives IrDA data communication waveforms in cooperation with the SCI1 based on the IrDA (Infrared Data Association) standard 1.0. See section 31, IrDA Interface in User's Manual.
I^2C bus interface (IIC)	The 2-channel I^2C bus interface (IIC) conforms with and provides a subset of the NXP I^2C (Inter-Integrated Circuit) bus interface functions. See section 32, I^2C Bus Interface (IIC) in User's Manual.
Serial Peripheral Interface (SPI)	Two independent Serial Peripheral Interface (SPI) channels are capable of high-speed, full-duplex synchronous serial communications with multiple processors and peripheral devices. See section 34, Serial Peripheral Interface (SPI) in User's Manual.
Serial Sound Interface Enhanced (SSIE)	The Serial Sound Interface Enhanced (SSIE) peripheral provides functionality to interface with digital audio devices for transmitting I^2S (Inter-Integrated Sound) 2ch, 4ch, 6ch, 8ch, Word Select (WS) Continue/Monaural/TDM audio data over a serial bus. The SSIE supports an audio clock frequency of up to 50 MHz, and can be operated as a slave or master receiver, transmitter, or transceiver to suit various applications. The SSIE includes 32-stage FIFO buffers in the receiver and transmitter, and supports interrupts and DMA-driven data reception and transmission. See section 37, Serial Sound Interface Enhanced (SSIE) in User's Manual.
Quad Serial Peripheral Interface (QSPI)	The Quad Serial Peripheral Interface (QSPI) is a memory controller for connecting a serial ROM (nonvolatile memory such as a serial flash memory, serial EEPROM, or serial FeRAM) that has an SPI-compatible interface. See section 35, Quad Serial Peripheral Interface (QSPI) in User's Manual.
Controller Area Network (CAN) module	The Controller Area Network (CAN) module provides functionality to receive and transmit data using a message-based protocol between multiple slaves and masters in electromagnetically-noisy applications. The CAN module complies with the ISO 11898-1 (CAN 2.0A/CAN 2.0B) standard and supports up to 32 mailboxes, which can be configured for transmission or reception in normal mailbox and FIFO modes. Both standard (11-bit) and extended (29-bit) messaging formats are supported. See section 33, Controller Area Network (CAN) Module in User's Manual.
USB 2.0 Full-Speed Module (USBFS) module	The USB 2.0 Full-Speed (USBFS) module can operate as a host controller or device controller. The module supports full-speed and low-speed (host controller only) transfer as defined in the Universal Serial Bus Specification 2.0. The module has an internal USB transceiver and supports all of the transfer types defined in the Universal Serial Bus Specification 2.0. The USB has buffer memory for data transfer, providing a maximum of 10 pipes. Pipes 1 to 9 can be assigned any endpoint number based on the peripheral devices used for communication or based on your system. See section 29, USB 2.0 Full-Speed Module (USBFS) in User's Manual.

Table 1.8 Communication interfaces (2 of 2)

Feature	Functional description
SD/MMC Host Interface (SDHI)	The SDHI and MultiMediaCard (MMC) interface module provides the functionality required to connect a variety of external memory cards to the MCU. The SDHI supports both 1-bit and 4-bit buses for connecting memory cards that support SD, SDHC, and SDXC formats. When developing host devices that are compliant with the SD Specifications, you must comply with the SD Host/Ancillary Product License Agreement (SD HALA). The MMC interface supports 1-bit and 4-bit MMC buses that provide eMMC 4.51 (JEDEC Standard JESD 84-B451) device access. This interface also provides backward compatibility and supports high-speed SDR transfer modes. See section 39, SD/MMC Host Interface (SDHI) in User's Manual.

Table 1.9 Analog

Feature	Functional description
12-bit A/D Converter (ADC12)	Two units of successive approximation 12-bit A/D Converter (ADC12) are provided. Analog input channels are selectable up to 11 in unit 0 and up to 8 in unit 1. Each 2 analog inputs of unit 0 and 1 are assigned to same port (AN005/AN105, AN006/AN106), up to 17 ports are available as analog input. The temperature sensor output and an internal reference voltage are selectable for conversion of each unit 0 and 1. The A/D conversion accuracy is selectable from 12-bit, 10-bit, and 8-bit conversion, making it possible to optimize the tradeoff between speed and resolution in generating a digital value. See section 42, 12-Bit A/D Converter (ADC12) in User's Manual.
12-bit D/A Converter (DAC12)	A 12-bit D/A Converter (DAC12) converts data and includes an output amplifier. See section 43, 12-Bit D/A Converter (DAC12) in User's Manual.
Temperature Sensor (TSN)	The on-chip Temperature Sensor (TSN) can determine and monitor the die temperature for reliable operation of the device. The sensor outputs a voltage directly proportional to the die temperature, and the relationship between the die temperature and the output voltage is linear. The output voltage is provided to the ADC12 for conversion and can also be used by the end application. See section 44, Temperature Sensor (TSN) in User's Manual.
High-Speed Analog Comparator (ACMPHS)	The High-Speed Analog Comparator (ACMPHS) compares a test voltage with a reference voltage and provides a digital output based on the conversion result. Both the test and reference voltages can be provided to the comparator from internal sources such as the DAC12 output and internal reference voltage, and an external source with or without an internal PGA. Such flexibility is useful in applications that require go/no-go comparisons to be performed between analog signals without necessarily requiring A/D conversion. See section 45, High-Speed Analog Comparator (ACMPHS) in User's Manual.

Table 1.10 Human machine interfaces

Feature	Functional description
Capacitive Touch Sensing Unit (CTSU)	The Capacitive Touch Sensing Unit (CTSU) measures the electrostatic capacitance of the touch sensor. Changes in the electrostatic capacitance are determined by software, which enables the CTSU to detect whether a finger is in contact with the touch sensor. The electrode surface of the touch sensor is usually enclosed with an electrical insulator so that fingers do not come into direct contact with the electrodes. See section 46, Capacitive Touch Sensing Unit (CTSU) in User's Manual.

Table 1.11 Data processing (1 of 2)

Feature	Functional description
Cyclic Redundancy Check (CRC) calculator	The Cyclic Redundancy Check (CRC) calculator generates CRC codes to detect errors in the data. The bit order of CRC calculation results can be switched for LSB-first or MSB-first communication. Additionally, various CRC-generating polynomials are available. The snoop function allows monitoring reads from and writes to specific addresses. This function is useful in applications that require CRC code to be generated automatically in certain events, such as monitoring writes to the serial transmit buffer and reads from the serial receive buffer. See section 36, Cyclic Redundancy Check (CRC) Calculator in User's Manual.
Data Operation Circuit (DOC)	The Data Operation Circuit (DOC) compares, adds, and subtracts 16-bit data. See section 47, Data Operation Circuit (DOC) in User's Manual.

Table 1.11 Data processing (2 of 2)

Feature	Functional description
Sampling Rate Converter (SRC)	The Sampling Rate Converter (SRC) converts the sampling rate of data produced by various audio decoders, such as the WMA, MP3, and AAC. Both 16-bit stereo and monaural data are supported. See section 38, Sampling Rate Converter (SRC) in User's Manual.

Table 1.12 Security

Feature	Functional description
Secure Crypto Engine 7 (SCE7)	• Security algorithms: - Symmetric algorithms: AES, 3DES, and ARC4 - Asymmetric algorithms: RSA, DSA, and ECC. • Other support features: - TRNG (True Random Number Generator) - Hash-value generation: SHA1, SHA224, SHA256, GHASH, and MD5 - 128-bit unique ID.

Table 1.13 I/O ports

Feature	Functional description
Programmable I/O ports	• I/O ports for the 100-pin LGA, 100-pin LQFP - I/O pins: 67 - Input pins: 9 - Pull-Up resistors: 68 - Open-drain outputs: 67 - 5-V tolerance: 14 • I/O ports for the 64-pin LQFP, 64-pin QFN - I/O pins: 35 - Input pins: 5 - Pull-Up resistors: 36 - Open-drain outputs: 35 - 5-V tolerance: 9

1.2 Block Diagram

Figure 1.1 shows a block diagram of the MCU superset, some individual devices within the group have a subset of the features.

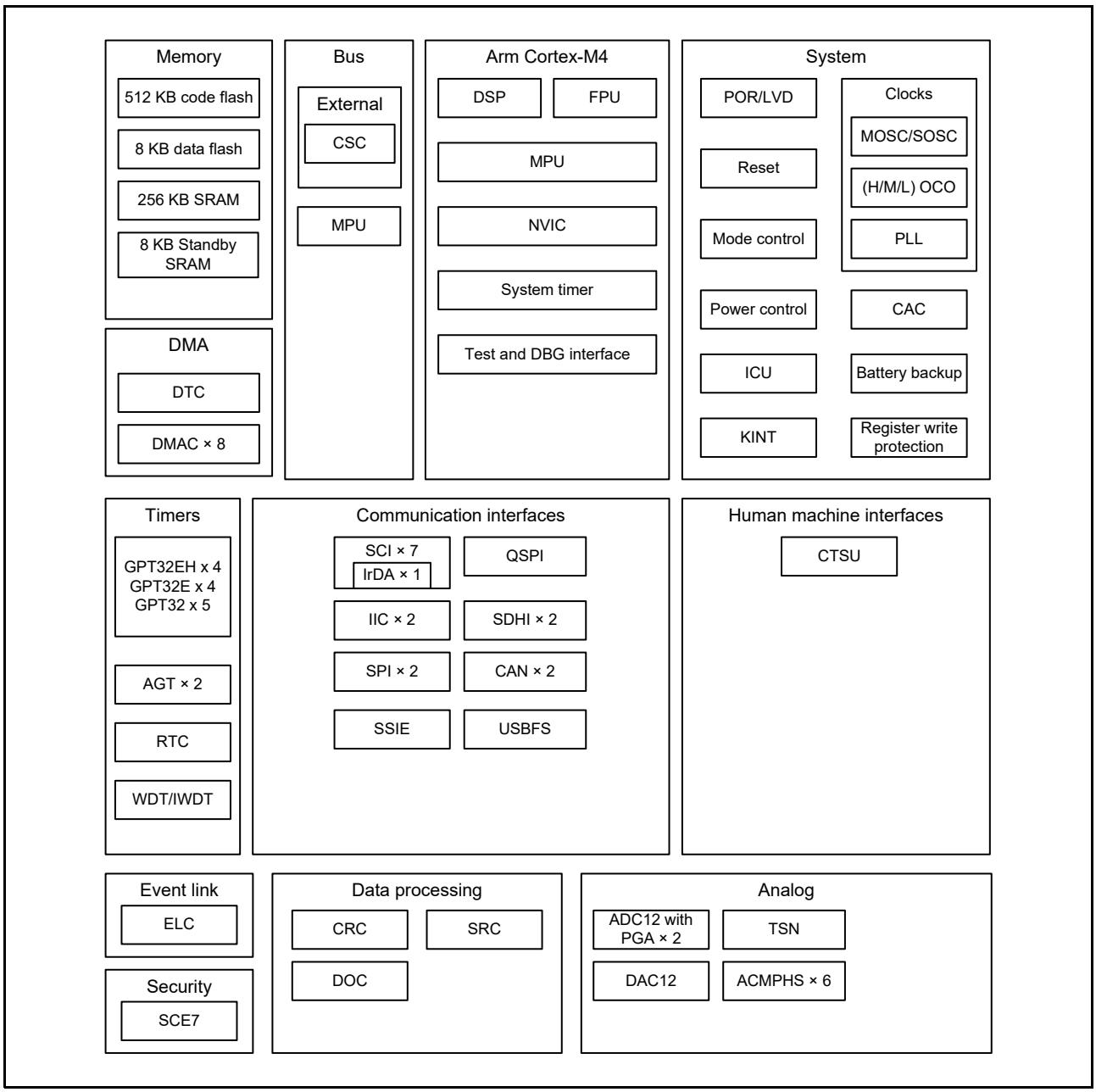

Figure 1.1 Block diagram

1.3 Part Numbering

Figure 1.2 shows the product part number information, including memory capacity and package type. Table 1.14 shows a list of products.

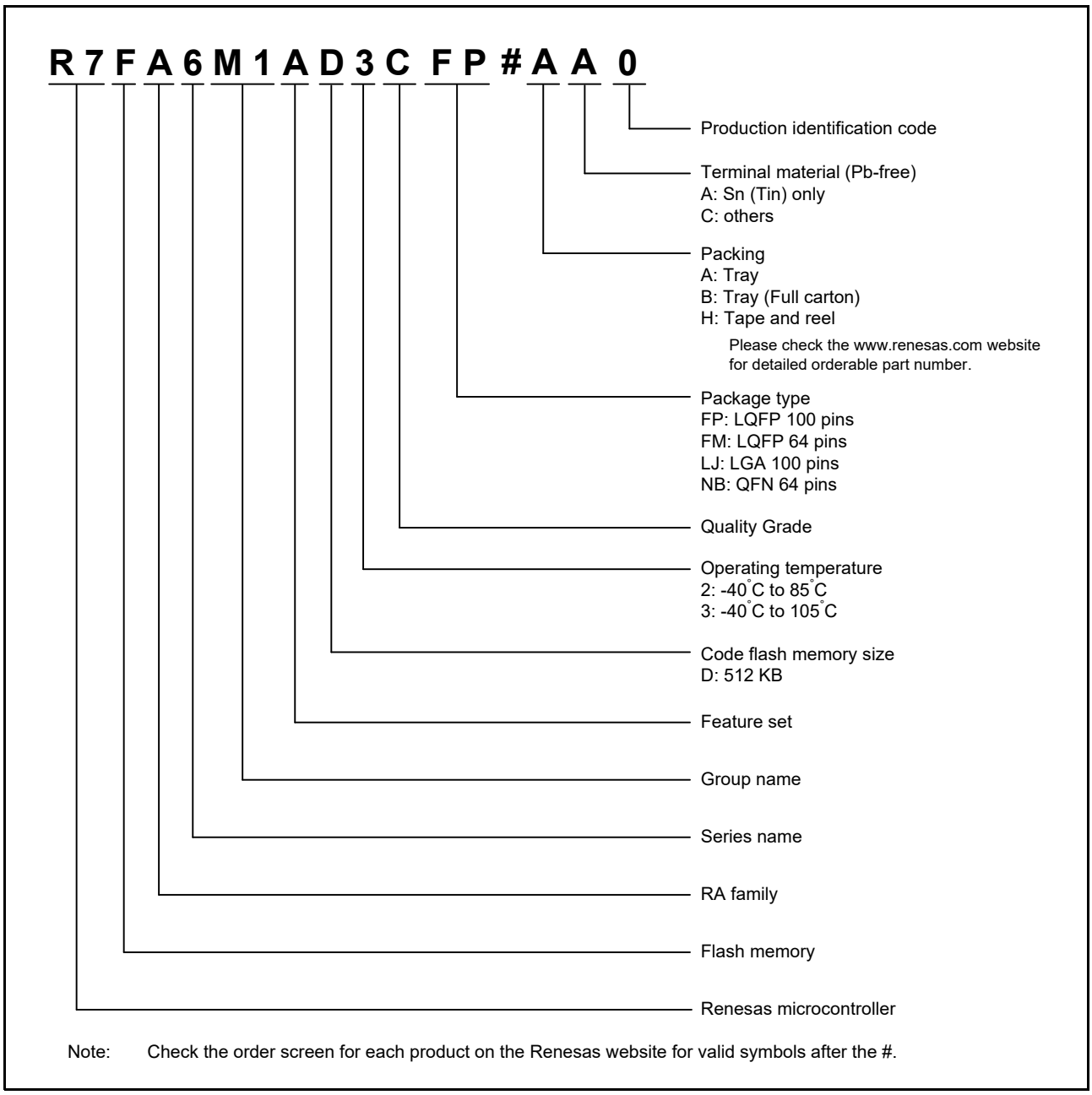

Figure 1.2 Part numbering scheme

Table 1.14 Product list

Product part number	Package code	Code flash	Data flash	SRAM	Operating temperature
R7FA6M1AD2CLJ	PTLG0100JA-A	512 KB	8 KB	256 KB	-40 to +85°C
R7FA6M1AD3CLJ					-40 to +105°C
R7FA6M1AD3CFP	PLQP0100KB-B				-40 to +105°C
R7FA6M1AD3CFM	PLQP0064KB-C				-40 to +105°C
R7FA6M1AD3CNB	PWQN0064LA-A				-40 to +105°C

1.4 Function Comparison

Table 1.15 Functional comparison

Function		Part numbers			
		R7FA6M1AD2CLJ/ R7FA6M1AD3CLJ	R7FA6M1AD3CFP	R7FA6M1AD3CFM	R7FA6M1AD3CNB
Pin count		100		64	
Package		LGA	LQFP	LQFP	QFN
Code flash memory		512 KB			
Data flash memory		8 KB			
SRAM		256 KB			
	Parity	224 KB			
	ECC	32 KB			
Standby SRAM		8 KB			
System	CPU clock	120 MHz			
	Backup registers	512 B			
	ICU	Yes			
	KINT	8			
Event link	ELC	Yes			
DMA	DTC	Yes			
	DMAC	8			
BUS	External bus	8-bit bus		No	
Timers	GPT32EH	4			
	GPT32E	4		3	
	GPT32	5		4	
	AGT	2			
	RTC	Yes			
	WDT/IWDT	Yes			
Communication	SCI	7			
	IIC	2			
	SPI	2			
	SSIE	1		No	
	QSPI	1			
	SDHI	2		No	
	CAN	2			
	USBFS	Yes			
Analog	ADC12	Unit0: 11 Unit1: 8 Shared channel pin: 2*1		Unit0: 7 Unit1: 3 Shared channel pin: 2*1	
	3ch-S/H	Unit0: 1 (3ch) Unit1: 1 (3ch)		Unit0: 1 (3ch)	
	PGA	Unit0: 3 Unit1: 3		Unit0: 3	
	DAC12	2			
	ACMPHS	6			
	TSN	Yes			
HMI	CTSU	12		7	
Data processing	CRC	Yes			
	DOC	Yes			
	SRC	Yes			
Security		SCE7			
I/O Ports	I/O Pins	67		35	
	Input pins	9		5	
	Pull-up resistors	68		36	
	open-drain outputs	67		35	
	5-V tolerance	14		9	

Note 1. Some input channels of the ADC units are sharing same port pin.

1.5 Pin Functions

Table 1.16 Pin functions (1 of 4)

Function	Signal	I/O	Description
Power supply	VCC	Input	Power supply pin. This is used as the digital power supply for the respective modules and internal voltage regulator, and used to monitor the voltage of the POR/LVD. Connect this pin to the system power supply. Connect it to VSS by a 0.1-μF capacitor. Place the capacitor close to the pin.
	VCL0	Input	Connect this pin to VSS through a 0.1-μF smoothing capacitor used to stabilize the internal power supply. Place the capacitor close to the pin.
	VCL	Input	
	VSS	Input	Ground pin. Connect to the system power supply (0 V).
	VBATT	Input	Backup power pin
Clock	XTAL	Output	Pins for a crystal resonator. An external clock signal can be input through the EXTAL pin.
	EXTAL	Input	
	XCIN	Input	Input/output pins for the sub-clock oscillator. Connect a crystal resonator between XCOUT and XCIN.
	XCOUT	Output	
	EBCLK	Output	Outputs the external bus clock for external devices
	CLKOUT	Output	Clock output pin
Operating mode control	MD	Input	Pin for setting the operating mode. The signal level on this pin must not be changed during operation mode transition on release from the reset state.
System control	RES	Input	Reset signal input pin. The MCU enters the reset state when this signal goes low.
CAC	CACREF	Input	Measurement reference clock input pin
Interrupt	NMI	Input	Non-maskable interrupt request pin
	IRQ0 to IRQ13	Input	Maskable interrupt request pins
KINT	KR00 to KR07	Input	A key interrupt can be generated by inputting a falling edge to the key interrupt input pins
On-chip emulator	TMS	I/O	On-chip emulator or boundary scan pins
	TDI	Input	
	TCK	Input	
	TDO	Output	
	TCLK	Output	This pin outputs the clock for synchronization with the trace data
	TDATA0 to TDATA3	Output	Trace data output
	SWDIO	I/O	Serial wire debug data input/output pin
	SWCLK	Input	Serial wire clock pin
	SWO	Output	Serial wire trace output pin
External bus interface	RD	Output	Strobe signal indicating that reading from the external bus interface space is in progress, active-low
	WR0	Output	Strobe signal indicating that writing to the external bus interface space is in progress, active-low
	ALE	Output	Address latch signal when address/data multiplexed bus is selected
	WAIT	Input	Input pin for wait request signals in access to the external space, active-low
	CS0, CS1, CS4 to CS7	Output	Select signals for CS areas, active-low
	A00 to A12	Output	Address bus
	D00 to D07	I/O	Data bus
	A00/D00 to A07/D07	I/O	Address/data multiplexed bus

Table 1.16 Pin functions (2 of 4)

Function	Signal	I/O	Description
GPT	GTETRGA, GTETRGB, GTETRGC, GTETRGD	Input	External trigger input pins
	GTIOC0A to GTIOC12A, GTIOC0B to GTIOC12B	I/O	Input capture, output compare, or PWM output pins
	GTIU	Input	Hall sensor input pin U
	GTIV	Input	Hall sensor input pin V
	GTIW	Input	Hall sensor input pin W
	GTOUUP	Output	3-phase PWM output for BLDC motor control (positive U phase)
	GTOULO	Output	3-phase PWM output for BLDC motor control (negative U phase)
	GTOVUP	Output	3-phase PWM output for BLDC motor control (positive V phase)
	GTOVLO	Output	3-phase PWM output for BLDC motor control (negative V phase)
	GTOWUP	Output	3-phase PWM output for BLDC motor control (positive W phase)
	GTOWLO	Output	3-phase PWM output for BLDC motor control (negative W phase)
AGT	AGTEE0, AGTEE1	Input	External event input enable signals
	AGTIO0, AGTIO1	I/O	External event input and pulse output pins
	AGTO0, AGTO1	Output	Pulse output pins
	AGTOA0, AGTOA1	Output	Output compare match A output pins
	AGTOB0, AGTOB1	Output	Output compare match B output pins
RTC	RTCOUT	Output	Output pin for 1-Hz or 64-Hz clock
	RTCIC0 to RTCIC2	Input	Time capture event input pins
SCI	SCK0 to SCK4, SCK8, SCK9	I/O	Input/output pins for the clock (clock synchronous mode)
	RXD0 to RXD4, RXD8, RXD9	Input	Input pins for received data (asynchronous mode/clock synchronous mode)
	TXD0 to TXD4, TXD8, TXD9	Output	Output pins for transmitted data (asynchronous mode/clock synchronous mode)
	CTS0_RTS0 to CTS4_RTS4, CTS8_RTS8, CTS9_RTS9	I/O	Input/output pins for controlling the start of transmission and reception (asynchronous mode/clock synchronous mode), active-low
	SCL0 to SCL4, SCL8, SCL9	I/O	Input/output pins for the IIC clock (simple IIC mode)
	SDA0 to SDA4, SDA8, SDA9	I/O	Input/output pins for the IIC data (simple IIC mode)
	SCK0 to SCK4, SCK8, SCK9	I/O	Input/output pins for the clock (simple SPI mode)
	MISO0 to MISO4, MISO8, MISO9	I/O	Input/output pins for slave transmission of data (simple SPI mode)
	MOSI0 to MOSI4, MOSI8, MOSI9	I/O	Input/output pins for master transmission of data (simple SPI mode)
	SS0 to SS4, SS8, SS9	Input	Chip-select input pins (simple SPI mode), active-low
IIC	SCL0, SCL1	I/O	Input/output pins for the clock
	SDA0, SDA1	I/O	Input/output pins for data
SSIE	SSIBCK0	I/O	SSIE serial bit clock pins
	SSILRCK0/SSIFS0	I/O	LR clock/frame synchronization pins
	SSITXD0	Output	Serial data output pins
	SSIRXD0	Input	Serial data input pins
	AUDIO_CLK	Input	External clock pin for audio (input oversampling clock)

Table 1.16 Pin functions (3 of 4)

Function	Signal	I/O	Description
SPI	RSPCKA, RSPCKB	I/O	Clock input/output pin
	MOSIA, MOSIB	I/O	Input or output pins for data output from the master
	MISOA, MISOB	I/O	Input or output pins for data output from the slave
	SSLA0, SSLB0	I/O	Input or output pin for slave selection
	SSLA1 to SSLA3, SSLB1 to SSLB3	Output	Output pins for slave selection
QSPI	QSPCLK	Output	QSPI clock output pin
	QSSL	Output	QSPI slave output pin
	QIO0 to QIO3	I/O	Data0 to Data3
CAN	CRX0, CRX1	Input	Receive data
	CTX0, CTX1	Output	Transmit data
USBFS	VCC_USB	Input	Power supply pins
	VSS_USB	Input	Ground pins
	USB_DP	I/O	D+ I/O pin of the USB on-chip transceiver. Connect this pin to the D+ pin of the USB bus
	USB_DM	I/O	D- I/O pin of the USB on-chip transceiver. Connect this pin to the D- pin of the USB bus
	USB_VBUS	Input	USB cable connection monitor pin. Connect this pin to VBUS of the USB bus. The VBUS pin status (connected or disconnected) can be detected when the USB module is operating as a device controller.
	USB_EXICEN	Output	Low-power control signal for external power supply (OTG) chip
	USB_VBUSEN	Output	VBUS (5 V) supply enable signal for external power supply chip
	USB_OVRCURA, USB_OVRCURB	Input	Connect the external overcurrent detection signals to these pins. Connect the VBUS comparator signals to these pins when the OTG power supply chip is connected.
	USB_ID	Input	Connect the MicroAB connector ID input signal to this pin during operation in OTG mode
SDHI	SD0CLK, SD1CLK	Output	SD clock output pins
	SD0CMD, SD1CMD	I/O	Command output pin and response input signal pins
	SD0DAT0 to SD0DAT3, SD1DAT0 to SD1DAT3	I/O	SD and MMC data bus pins
	SD0CD	Input	SD card detection pins
	SD0WP	Input	SD write-protect signals
Analog power supply	AVCC0	Input	Analog voltage supply pin. This is used as the analog power supply for the respective modules. Supply this pin with the same voltage as the VCC pin.
	AVSS0	Input	Analog ground pin. This is used as the analog ground for the respective modules. Supply this pin with the same voltage as the VSS pin.
	VREFH0	Input	Analog reference voltage supply pin for the ADC12 (unit 0). Connect this pin to VCC when not using the ADC12 (unit 0) and sample-and-hold circuit for AN000 to AN002.
	VREFL0	Input	Analog reference ground pin for the ADC12. Connect this pin to VSS when not using the ADC12 (unit 0) and sample-and-hold circuit for AN000 to AN002
	VREFH	Input	Analog reference voltage supply pin for the ADC12 (unit 1) and D/A Converter. Connect this pin to VCC when not using the ADC12 (unit 1), sample-and-hold circuit for AN100 to AN102, and D/A Converter.
	VREFL	Input	Analog reference ground pin for the ADC12 and D/A Converter. Connect this pin to VSS when not using the ADC12 (unit 1), sample-and-hold circuit for AN100 to AN102, and D/A Converter.

Table 1.16 Pin functions (4 of 4)

Function	Signal	I/O	Description
ADC12	AN000 to AN003, AN005 to AN007, AN016 to AN018, AN020	Input	Input pins for the analog signals to be processed by the ADC12. AN005 & AN105 and AN006 & AN106 are assigned to same port pin
	AN100 to AN102, AN105 to AN107, AN116, AN117	Input	
	ADTRG0	Input	Input pins for the external trigger signals that start the A/D conversion
	ADTRG1	Input	
	PGAVSS000, PGAVSS100	Input	Differential input pins
DAC12	DA0, DA1	Output	Output pins for the analog signals processed by the D/A converter
ACMPHS	VCOUT	Output	Comparator output pin
	IVREF0 to IVREF3	Input	Reference voltage input pins for comparator
	IVCMP0 to IVCMP3	Input	Analog voltage input pins for comparator
CTSU	TS01 to TS12	Input	Capacitive touch detection pins (touch pins)
	TSCAP	-	Secondary power supply pin for the touch driver
I/O ports	P000 to P007	Input	General-purpose input pins
	P008, P014, P015	I/O	General-purpose input/output pins
	P100 to P115	I/O	General-purpose input/output pins
	P200	Input	General-purpose input pin
	P201, P205 to P214	I/O	General-purpose input/output pins
	P300 to P307	I/O	General-purpose input/output pins
	P400 to P415	I/O	General-purpose input/output pins
	P500 to P504, P508	I/O	General-purpose input/output pins
	P600 to P602, P608 to P610	I/O	General-purpose input/output pins
	P708	I/O	General-purpose input/output pin

1.6 Pin Assignments

Figure 1.3 to Figure 1.6 show the pin assignments.

R7FA6M1AD2CLJ

	A	B	C	D	E	F	G	H	J	K	
10	P407	P409	P412	VCC	P212/ EXTAL	XCOUT	VCL0	P403	P400	P000	10
9	USB_DM	USB_DP	P411	VSS	P213/ XTAL	XCIN	VBATT	P405	P401	P001	9
8	VCC_ USB	VSS_ USB	P207	P413	P415	P708	P404	P003	P004	P002	8
7	P205	P214	P206	P408	P414	P406	P006	P007	P008	P005	7
6	P209	P208	P210	P211	P410	P402	P508	AVSS0	VREFL0	VREFH0	6
5	P200	P201/MD	P307	RES	P113	P600	P504	AVCC0	VREFL	VREFH	5
4	VCC	P304	P305	P306	P115	P601	P503	P100	P015	P014	4
3	VSS	P303	P110/TDI	P111	P609	P602	P107	P103	VSS	VCC	3
2	P300/ TCK/ SWCLK	P302	P301	P114	P610	VSS	P106	P101	P501	P502	2
1	P108/ TMS/ SWDIO	P109/ TDO	P112	P608	VCC	VCL	P105	P104	P102	P500	1
	A	B	C	D	E	F	G	H	J	K	

Figure 1.3 Pin assignment for 100-pin LGA (top view)

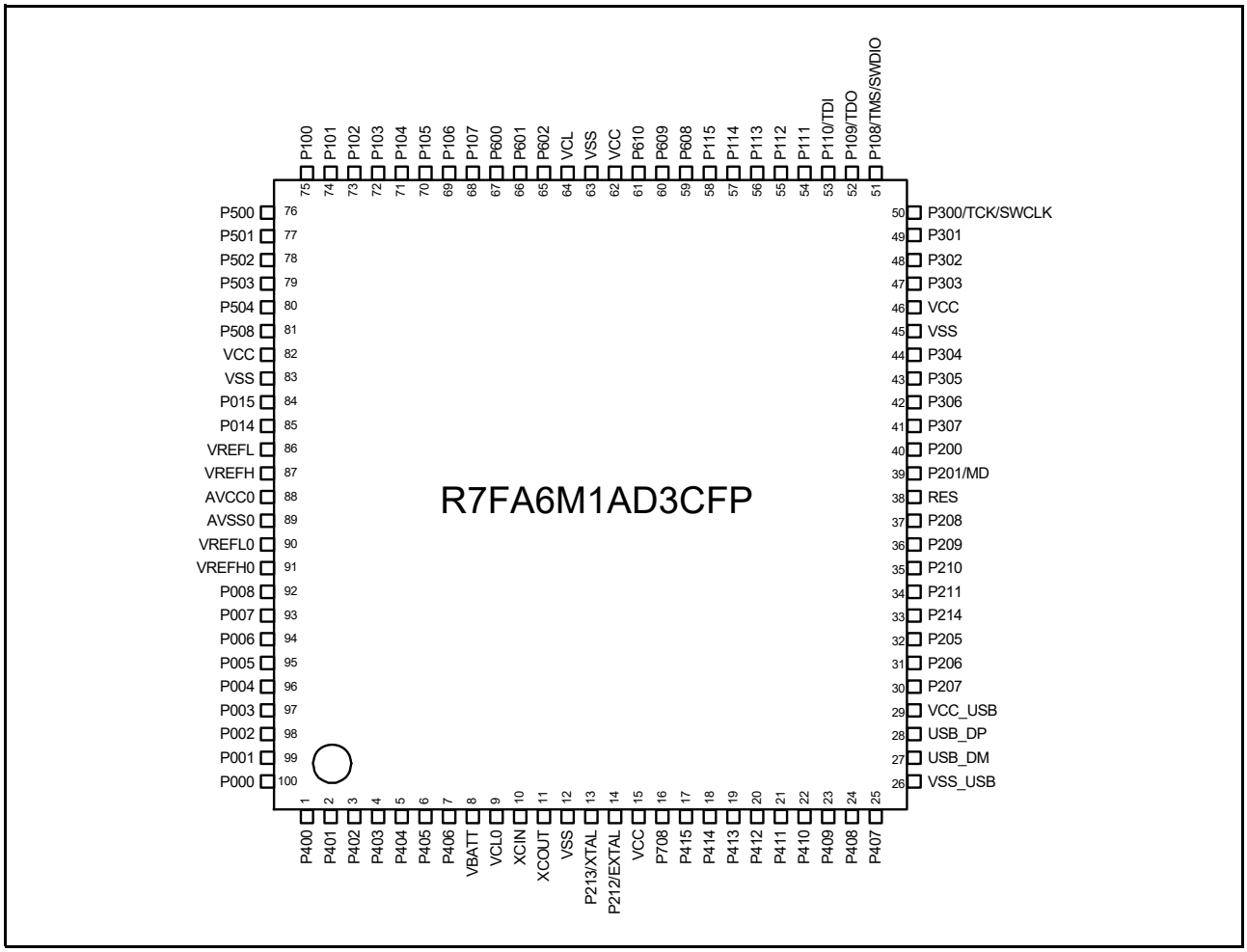

Figure 1.4 Pin assignment for 100-pin LQFP (top view)

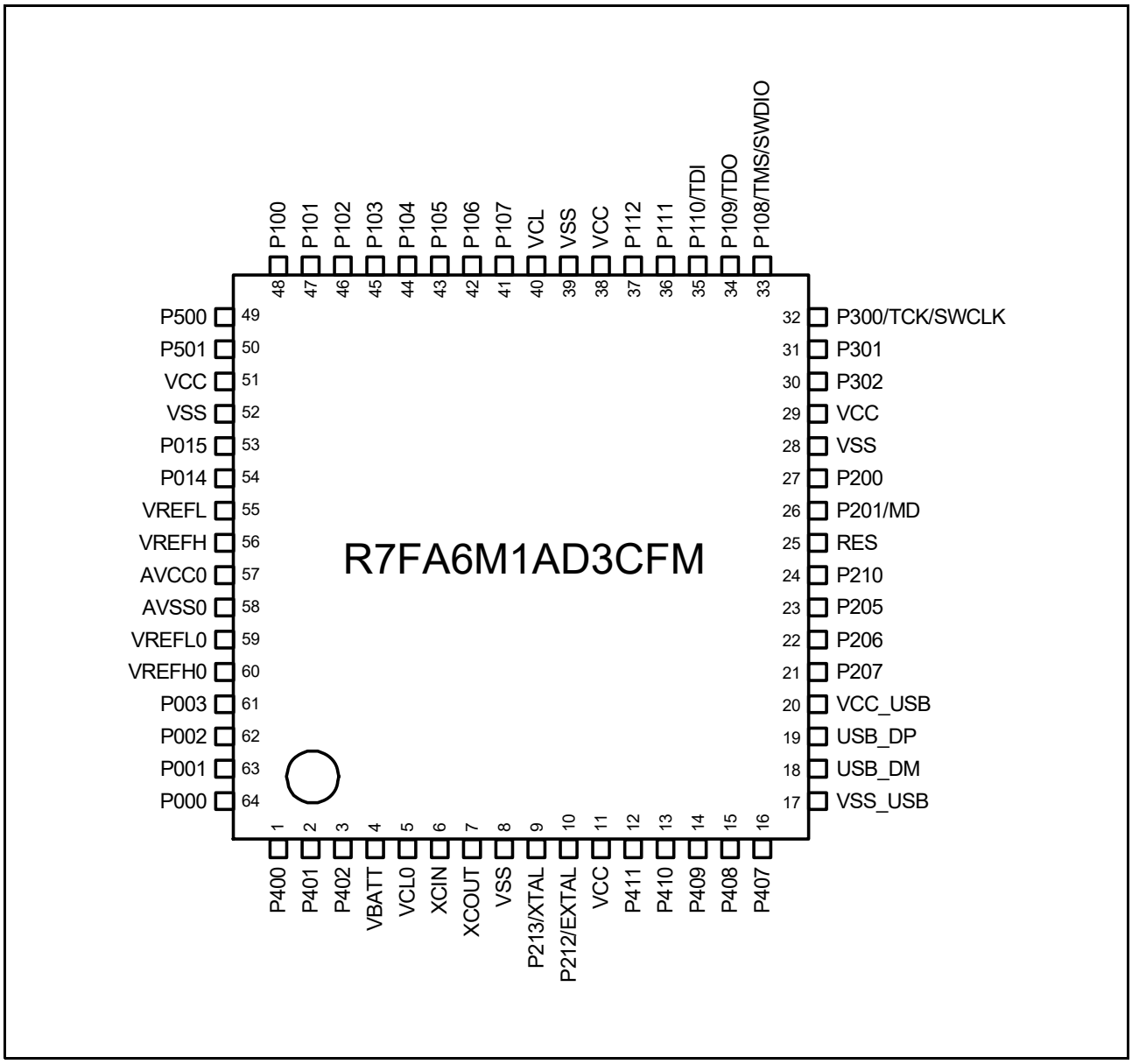

Figure 1.5 Pin assignment for 64-pin LQFP (top view)

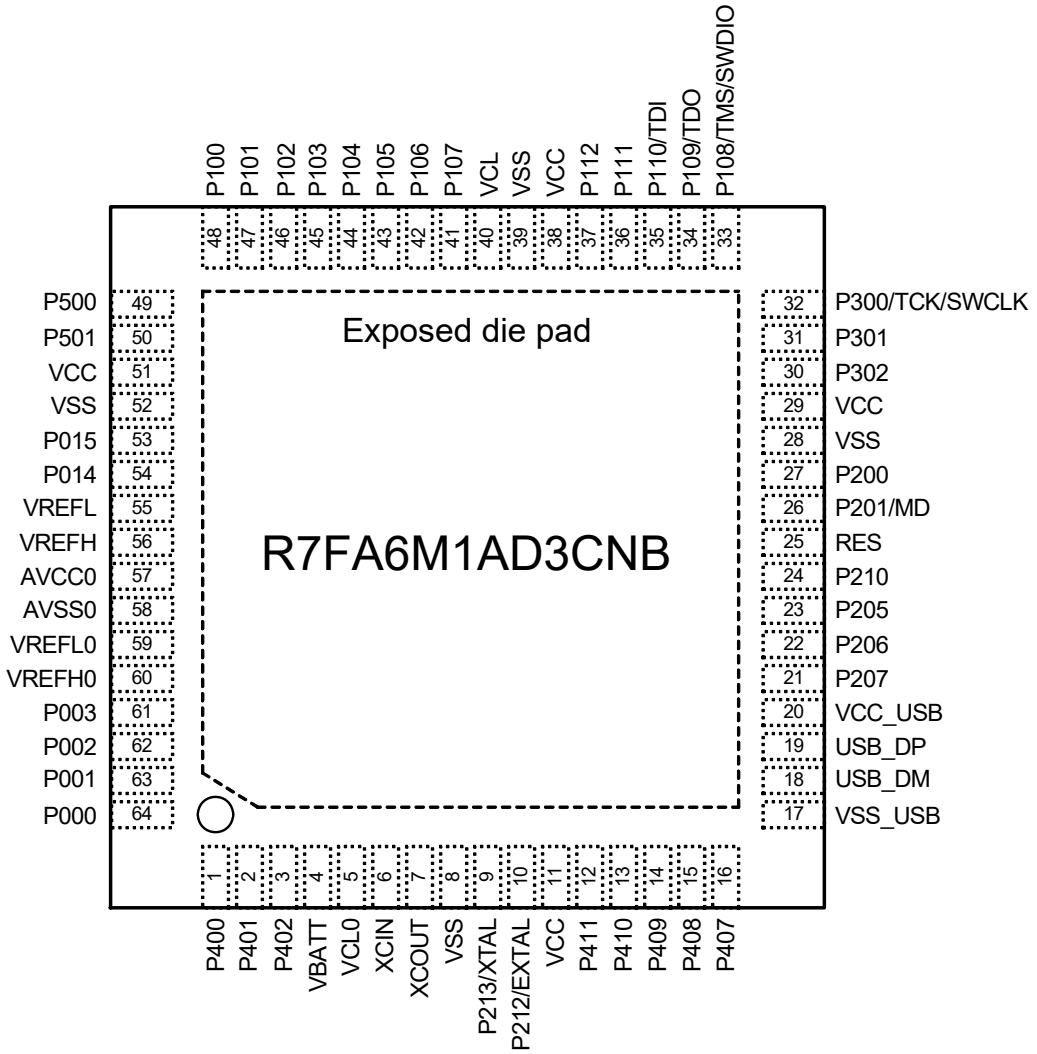

Note: Exposed die pad is recommended to connect to VSS.

Figure 1.6 Pin assignment for 64-pin QFN (top view)

1.7 Pin Lists

Pin number				Power, System, Clock, Debug, CAC	Interrupt	I/O port	External bus	Timers				Communication interfaces							Analog		HMI
LGA100	LQFP100	LQFP64	QFN64					AGT	GPT	GPT	RTC	USBFS, CAN	SCI0,2,4,8 (30 MHz)	SCI1,3,9 (30 MHz)	IIC	SPI, QSPI	SSIE	SDHI	ADC12	DAC12, ACMPHS	CTSU
J10	1	1	1	-	IRQ0	P400	-	AGTIO1	-	GTIOC6A	-	-	SCK4	-	SCL0_A	-	AUDIO_CLK	-	ADTRG1	-	-
J9	2	2	2	-	IRQ5-DS	P401	-	-	GTETRGA	GTIOC6B	-	CTX0	CTS4_RTS4/SS4	-	SDA0_A	-	-	-	-	-	-
F6	3	3	3	CACREF	IRQ4-DS	P402	-	AGTIO0/AGTIO1	-	-	RTCIC0	CRX0	-	-	-	-	AUDIO_CLK	-	-	-	-
H10	4	-	-	-	-	P403	-	AGTIO0/AGTIO1	-	GTIOC3A	RTCIC1	-	-	-	-	-	SSIBCK0_A	-	-	-	-
G8	5	-	-	-	-	P404	-	-	-	GTIOC3B	RTCIC2	-	-	-	-	-	SSILRCK0/SSIFS0_A	-	-	-	-
H9	6	-	-	-	-	P405	-	-	-	GTIOC1A	-	-	-	-	-	-	SSITXD0_A	-	-	-	-
F7	7	-	-	-	-	P406	-	-	-	GTIOC1B	-	-	-	-	-	-	SSIRXD0_A	-	-	-	-
G9	8	4	4	VBATT	-	-	-	-	-	-	-	-	-	-	-	-	-	-	-	-	-
G10	9	5	5	VCL0	-	-	-	-	-	-	-	-	-	-	-	-	-	-	-	-	-
F9	10	6	6	XCIN	-	-	-	-	-	-	-	-	-	-	-	-	-	-	-	-	-
F10	11	7	7	XCOUT	-	-	-	-	-	-	-	-	-	-	-	-	-	-	-	-	-
D9	12	8	8	VSS	-	-	-	-	-	-	-	-	-	-	-	-	-	-	-	-	-
E9	13	9	9	XTAL	IRQ2	P213	-	-	GTETRGC	GTIOC0A	-	-	-	TXD1/MOSI1/SDA1	-	-	-	-	ADTRG1	-	-
E10	14	10	10	EXTAL	IRQ3	P212	-	AGTEE1	GTETRGD	GTIOC0B	-	-	-	RXD1/MISO1/SCL1	-	-	-	-	-	-	-
D10	15	11	11	VCC	-	-	-	-	-	-	-	-	-	-	-	-	-	-	-	-	-
F8	16	-	-	CACREF	IRQ11	P708	-	-	-	-	-	-	-	RXD1/MISO1/SCL1	-	SSLA3_B	AUDIO_CLK	-	-	-	TS12
E8	17	-	-	-	IRQ8	P415	-	-	-	GTIOC0A	-	USB_VBUSEN	-	-	-	SSLA2_B	-	SD0CD	-	-	TS11
E7	18	-	-	-	IRQ9	P414	-	-	-	GTIOC0B	-	-	-	-	-	SSLA1_B	-	SD0WP	-	-	TS10
D8	19	-	-	-	-	P413	-	-	GTOUUP	-	-	-	CTS0_RTS0/SS0	-	-	SSLA0_B	-	SD0CLK_A	-	-	TS09
C10	20	-	-	-	-	P412	-	AGTEE1	GTOULO	-	-	-	SCK0	-	-	RSPCKA_B	-	SD0CMD_A	-	-	TS08
C9	21	12	12	-	IRQ4	P411	-	AGTOA1	GTOVUP	GTIOC9A	-	-	TXD0/MOSI0/SDA0	CTS3_RTS3/SS3	-	MOSIA_B	-	SD0DAT0_A	-	-	TS07
E6	22	13	13	-	IRQ5	P410	-	AGTOB1	GTOVLO	GTIOC9B	-	-	RXD0/MISO0/SCL0	SCK3	-	MISOA_B	-	SD0DAT1_A	-	-	TS06
B10	23	14	14	-	IRQ6	P409	-	-	GTOWUP	GTIOC10A	-	USB_EXICEN	-	TXD3/MOSI3/SDA3	-	-	-	-	-	-	TS05
D7	24	15	15	-	IRQ7	P408	-	-	GTOWLO	GTIOC10B	-	USB_ID	-	RXD3/MISO3/SCL3	SCL0_B	-	-	-	-	-	TS04
A10	25	16	16	-	-	P407	-	AGTIO0	-	-	RTCOUT	USB_VBUS	CTS4_RTS4/SS4	-	SDA0_B	-	-	-	ADTRG0	-	TS03
B8	26	17	17	VSS_USB	-	-	-	-	-	-	-	-	-	-	-	-	-	-	-	-	-
A9	27	18	18	-	-	-	-	-	-	-	-	USB_DM	-	-	-	-	-	-	-	-	-
B9	28	19	19	-	-	-	-	-	-	-	-	USB_DP	-	-	-	-	-	-	-	-	-
A8	29	20	20	VCC_USB	-	-	-	-	-	-	-	-	-	-	-	-	-	-	-	-	-
C8	30	21	21	-	-	P207	-	-	-	-	-	-	-	-	-	QSSL	-	-	-	-	TS02
C7	31	22	22	-	IRQ0-DS	P206	WAIT	-	GTIU	-	-	USB_VBUSEN	RXD4/MISO4/SCL4	-	SDA1_A	-	-	SD0DAT2_A	-	-	TS01
A7	32	23	23	CLKOUT	IRQ1-DS	P205	-	AGTO1	GTIV	GTIOC4A	-	USB_OVRCURA-DS	TXD4/MOSI4/SDA4	CTS9_RTS9/SS9	SCL1_A	-	-	SD0DAT3_A	-	-	TSCAP
B7	33	-	-	TCLK	-	P214	-	-	GTIU	-	-	-	-	-	-	QSPCLK	-	SD0CLK_B	-	-	-
D6	34	-	-	TDATA0	-	P211	CS7	-	GTIV	-	-	-	-	-	-	QIO0	-	SD0CMD_B	-	-	-
C6	35	24	24	TDATA1	-	P210	CS6	-	GTIW	-	-	-	-	-	-	QIO1	-	SD0CD	-	-	-
A6	36	-	-	TDATA2	-	P209	CS5	-	GTOVUP	-	-	-	-	-	-	QIO2	-	SD0WP	-	-	-
B6	37	-	-	TDATA3	-	P208	CS4	-	GTOVLO	-	-	-	-	-	-	QIO3	-	SD0DAT0_B	-	-	-
D5	38	25	25	RES	-	-	-	-	-	-	-	-	-	-	-	-	-	-	-	-	-
B5	39	26	26	MD	-	P201	-	-	-	-	-	-	-	-	-	-	-	-	-	-	-
A5	40	27	27	-	NMI	P200	-	-	-	-	-	-	-	-	-	-	-	-	-	-	-
C5	41	-	-	-	-	P307	A12	-	GTOUUP	-	-	-	-	-	-	QIO0	-	-	-	-	-
D4	42	-	-	-	-	P306	A11	-	GTOULO	-	-	-	-	-	-	QSSL	-	-	-	-	-
C4	43	-	-	-	IRQ8	P305	A10	-	GTOWUP	-	-	-	-	-	-	QSPCLK	-	-	-	-	-
B4	44	-	-	-	IRQ9	P304	A09	-	GTOWLO	GTIOC7A	-	-	-	-	-	-	-	-	-	-	-
A3	45	28	28	VSS	-	-	-	-	-	-	-	-	-	-	-	-	-	-	-	-	-
A4	46	29	29	VCC	-	-	-	-	-	-	-	-	-	-	-	-	-	-	-	-	-
B3	47	-	-	-	-	P303	A08	-	-	GTIOC7B	-	-	-	-	-	-	-	-	-	-	-
B2	48	30	30	-	IRQ5	P302	A07	-	GTOUUP	GTIOC4A	-	-	TXD2/MOSI2/SDA2	-	-	SSLB3_B	-	-	-	-	-
C2	49	31	31	-	IRQ6	P301	A06	AGTIO0	GTOULO	GTIOC4B	-	-	RXD2/MISO2/SCL2	CTS9_RTS9/SS9	-	SSLB2_B	-	-	-	-	-
A2	50	32	32	TCK/SWCLK	-	P300	-	-	GTOUUP	GTIOC0A_A	-	-	-	-	-	SSLB1_B	-	-	-	-	-
A1	51	33	33	TMS/SWDIO	-	P108	-	-	GTOULO	GTIOC0B_A	-	-	-	CTS9_RTS9/SS9	-	SSLB0_B	-	-	-	-	-

Pin number								Timers				Communication interfaces							Analog		HMI
LGA100	LQFP100	LQFP64	QFN64	Power, System, Clock, Debug, CAC	Interrupt	I/O port	External bus	AGT	GPT	GPT	RTC	USBFS, CAN	SCI0,2,4,8 (30 MHz)	SCI1,3,9 (30 MHz)	IIC	SPI, QSPI	SSIE	SDHI	ADC12	DAC12, ACMPHS	CTSU
B1	52	34	34	CLKOUT/TDO/SWO	-	P109	-	-	GTOVUP	GTIOC1A_A	-	CTX1	-	TXD9/MOSI9/SDA9	-	MOSIB_B	-	-	-	-	-
C3	53	35	35	TDI	IRQ3	P110	-	-	GTOVLO	GTIOC1B_A	-	CRX1	CTS2_RTS2/SS2	RXD9/MISO9/SCL9	-	MISOB_B	-	-	-	VCOUT	-
D3	54	36	36	-	IRQ4	P111	A05	-	-	GTIOC3A_A	-	-	SCK2	SCK9	-	RSPCKB_B	-	-	-	-	-
C1	55	37	37	-	-	P112	A04	-	-	GTIOC3B_A	-	-	TXD2/MOSI2/SDA2	SCK1	-	SSLB0_B	SSIBCK0_B	-	-	-	-
E5	56	-	-	-	-	P113	A03	-	-	GTIOC2A	-	-	RXD2/MISO2/SCL2	-	-	-	SSILRCK0/SSIFS0_B	-	-	-	-
D2	57	-	-	-	-	P114	A02	-	-	GTIOC2B	-	-	-	-	-	-	SSIRXD0_B	-	-	-	-
E4	58	-	-	-	-	P115	A01	-	-	GTIOC4A	-	-	-	-	-	-	SSITXD0_B	-	-	-	-
D1	59	-	-	-	-	P608	A00	-	-	GTIOC4B	-	-	-	-	-	-	-	-	-	-	-
E3	60	-	-	-	-	P609	CS1	-	-	GTIOC5A	-	CTX1	-	-	-	-	-	-	-	-	-
E2	61	-	-	-	-	P610	CS0	-	-	GTIOC5B	-	CRX1	-	-	-	-	-	-	-	-	-
E1	62	38	38	VCC	-	-	-	-	-	-	-	-	-	-	-	-	-	-	-	-	-
F2	63	39	39	VSS	-	-	-	-	-	-	-	-	-	-	-	-	-	-	-	-	-
F1	64	40	40	VCL	-	-	-	-	-	-	-	-	-	-	-	-	-	-	-	-	-
F3	65	-	-	-	-	P602	EBCLK	-	-	GTIOC7B	-	-	-	TXD9	-	-	-	-	-	-	-
F4	66	-	-	-	-	P601	WR0	-	-	GTIOC6A	-	-	-	RXD9	-	-	-	-	-	-	-
F5	67	-	-	CLKOUT/CACREF	-	P600	RD	-	-	GTIOC6B	-	-	-	SCK9	-	-	-	-	-	-	-
G3	68	41	41	-	KR07	P107	D07[A07/D07]	AGTOA0	-	GTIOC8A	-	-	CTS8_RTS8/SS8	-	-	QIO3	-	-	-	-	-
G2	69	42	42	-	KR06	P106	D06[A06/D06]	AGTOB0	-	GTIOC8B	-	-	SCK8	-	-	SSLA3_A/QIO2	-	-	-	-	-
G1	70	43	43	-	IRQ0/KR05	P105	D05[A05/D05]	-	GTETRGA	GTIOC1A	-	-	TXD8/MOSI8/SDA8	-	-	SSLA2_A/QIO1	-	-	-	-	-
H1	71	44	44	-	IRQ1/KR04	P104	D04[A04/D04]	-	GTETRGB	GTIOC1B	-	-	RXD8/MISO8/SCL8	-	-	SSLA1_A/QIO0	-	-	-	-	-
H3	72	45	45	-	KR03	P103	D03[A03/D03]	-	GTOWUP	GTIOC2A_A	-	CTX0	CTS0_RTS0/SS0	-	-	SSLA0_A	-	-	-	-	-
J1	73	46	46	-	KR02	P102	D02[A02/D02]	AGTO0	GTOWLO	GTIOC2B_A	-	CRX0	SCK0	-	-	RSPCKA_A	-	-	ADTRG0	-	-
H2	74	47	47	-	IRQ1/KR01	P101	D01[A01/D01]	AGTEE0	GTETRGB	GTIOC5A	-	-	TXD0/MOSI0/SDA0	CTS1_RTS1/SS1	SDA1_B	MOSIA_A	-	-	-	-	-
H4	75	48	48	-	IRQ2/KR00	P100	D00[A00/D00]	AGTIO0	GTETRGA	GTIOC5B	-	-	RXD0/MISO0/SCL0	SCK1	SCL1_B	MISOA_A	-	-	-	-	-
K1	76	49	49	-	-	P500	-	AGTOA0	GTIU	GTIOC11A	-	USB_VBUSEN	-	-	-	QSPCLK	-	SD1CLK_A	AN016	IVREF0	-
J2	77	50	50	-	IRQ11	P501	-	AGTOB0	GTIV	GTIOC11B	-	USB_OVRCURA	-	-	-	QSSL	-	SD1CMD_A	AN116	IVREF1	-
K2	78	-	-	-	IRQ12	P502	-	-	GTIW	GTIOC12A	-	USB_OVRCURB	-	-	-	QIO0	-	SD1DAT0_A	AN017	IVCMP0	-
G4	79	-	-	-	-	P503	-	-	GTETRGC	GTIOC12B	-	USB_EXICEN	-	-	-	QIO1	-	SD1DAT1_A	AN117	-	-
G5	80	-	-	-	-	P504	ALE	-	GTETRGD	-	-	USB_ID	-	-	-	QIO2	-	SD1DAT2_A	AN018	-	-
G6	81	-	-	-	-	P508	-	-	-	-	-	-	-	-	-	-	-	SD1DAT3_A	AN020	-	-
K3	82	51	51	VCC	-	-	-	-	-	-	-	-	-	-	-	-	-	-	-	-	-
J3	83	52	52	VSS	-	-	-	-	-	-	-	-	-	-	-	-	-	-	-	-	-
J4	84	53	53	-	IRQ13	P015	-	-	-	-	-	-	-	-	-	-	-	-	AN006/AN106	DA1/IVCMP1	-
K4	85	54	54	-	-	P014	-	-	-	-	-	-	-	-	-	-	-	-	AN005/AN105	DA0/IVREF3	-
J5	86	55	55	VREFL	-	-	-	-	-	-	-	-	-	-	-	-	-	-	-	-	-
K5	87	56	56	VREFH	-	-	-	-	-	-	-	-	-	-	-	-	-	-	-	-	-
H5	88	57	57	AVCC0	-	-	-	-	-	-	-	-	-	-	-	-	-	-	-	-	-
H6	89	58	58	AVSS0	-	-	-	-	-	-	-	-	-	-	-	-	-	-	-	-	-
J6	90	59	59	VREFL0	-	-	-	-	-	-	-	-	-	-	-	-	-	-	-	-	-
K6	91	60	60	VREFH0	-	-	-	-	-	-	-	-	-	-	-	-	-	-	-	-	-
J7	92	-	-	-	IRQ12-DS	P008	-	-	-	-	-	-	-	-	-	-	-	-	AN003	-	-
H7	93	-	-	-	-	P007	-	-	-	-	-	-	-	-	-	-	-	-	PGAVSS100/AN107	-	-
G7	94	-	-	-	IRQ11-DS	P006	-	-	-	-	-	-	-	-	-	-	-	-	AN102	IVCMP2	-
K7	95	-	-	-	IRQ10-DS	P005	-	-	-	-	-	-	-	-	-	-	-	-	AN101	IVCMP2	-
J8	96	-	-	-	IRQ9-DS	P004	-	-	-	-	-	-	-	-	-	-	-	-	AN100	IVCMP2	-
H8	97	61	61	-	-	P003	-	-	-	-	-	-	-	-	-	-	-	-	PGAVSS000/AN007	-	-
K8	98	62	62	-	IRQ8-DS	P002	-	-	-	-	-	-	-	-	-	-	-	-	AN002	IVCMP2	-

Pin number				Power, System, Clock, Debug, CAC	Interrupt	I/O port	External bus	Timers				Communication interfaces							Analog		HMI
LGA100	LQFP100	LQFP64	QFN64					AGT	GPT	GPT	RTC	USBFS, CAN	SCI0,2,4,8 (30 MHz)	SCI1,3,9 (30 MHz)	IIC	SPI, QSPI	SSIE	SDHI	ADC12	DAC12, ACMPHS	CTSU
K9	99	63	63	-	IRQ7-DS	P001	-	-	-	-	-	-	-	-	-	-	-	-	AN001	IVCMP2	-
K10	100	64	64	-	IRQ6-DS	P000	-	-	-	-	-	-	-	-	-	-	-	-	AN000	IVCMP2	-

Note: Some pin names have the added suffix of _A and _B. When assigning the GPT, IIC, SPI, SSIE, and SDHI functionality, select the functional pins with the same suffix.

2. Electrical Characteristics

Unless otherwise specified, the electrical characteristics of the MCU are defined under the following conditions:

- VCC = AVCC0 = VCC_USB = VBATT = 2.7 to 3.6 V
- 2.7 ≤ VREFH0/VREFH ≤ AVCC0
- VSS = AVSS0 = VREFL0/VREFL = VSS_USB = 0 V
- $T_a = T_{opr}$.

Figure 2.1 shows the timing conditions.

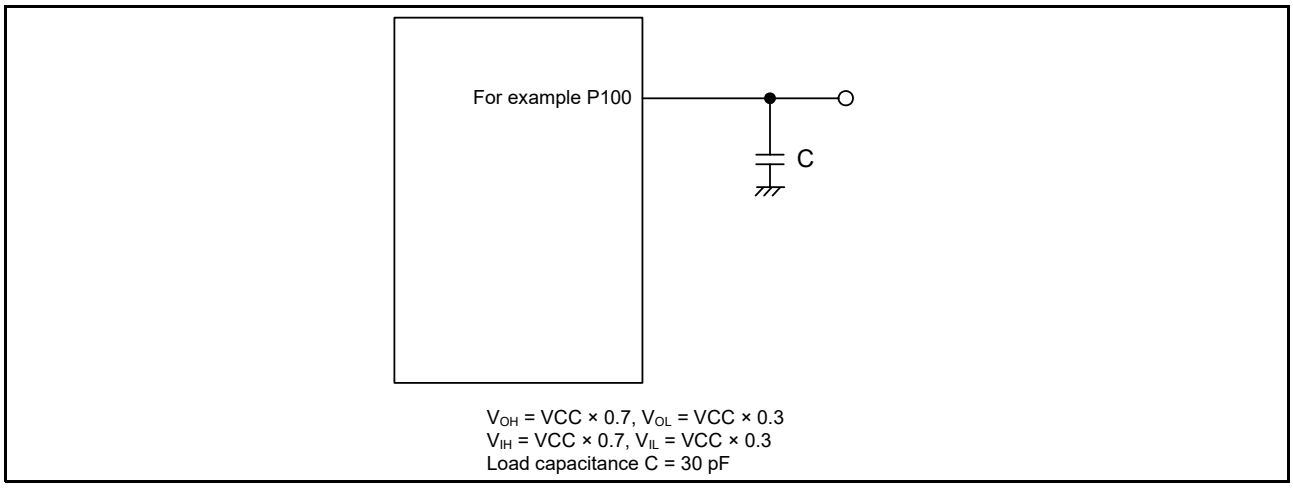

Figure 2.1 Input or output timing measurement conditions

The measurement conditions for the timing specification of each peripheral are recommended for the best peripheral operation. However, make sure to adjust the driving abilities of each pin to meet the conditions of your system.

Each function pin used for the same function must select the same drive ability. If the I/O drive ability of each function pin is mixed, the A/C specification of each function is not guaranteed.

2.1 Absolute Maximum Ratings

Table 2.1 Absolute maximum ratings

Parameter	Symbol	Value	Unit
Power supply voltage	VCC, VCC_USB *2	-0.3 to +4.0	V
VBATT power supply voltage	VBATT	-0.3 to +4.0	V
Input voltage (except for 5 V-tolerant ports*1)	V_{in}	-0.3 to VCC + 0.3	V
Input voltage (5 V-tolerant ports*1)	V_{in}	-0.3 to + VCC + 4.0 (max. 5.8)	V
Reference power supply voltage	VREFH/VREFH0	-0.3 to AVCC0 + 0.3	V
Analog power supply voltage	AVCC0 *2	-0.3 to +4.0	V
Analog input voltage (except for P000 to P007)	V_{AN}	-0.3 to AVCC0 + 0.3	V
Analog input voltage (P000 to P007) when PGA differential input is disabled	V_{AN}	-0.3 to AVCC0 + 0.3	V
Analog input voltage (P000 to P002, P004 to P006) when PGA differential input is enabled	V_{AN}	-1.3 to AVCC0 + 0.3	V
Analog input voltage (P003, P007) when PGA differential input is enabled	V_{AN}	-0.8 to AVCC0 + 0.3	V
Operating temperature*3, *4, *5	T_{opr}	-40 to +85 -40 to +105	°C
Storage temperature	T_{stg}	-55 to +125	°C

Caution: Permanent damage to the MCU might result if absolute maximum ratings are exceeded.

Note 1. Ports P205, P206, P400, P401, P407 to P415, and P708 are 5 V tolerant.
Note 2. Connect AVCC0 and VCC_USB to VCC.
Note 3. See section 2.2.1, T_j/T_a Definition.
Note 4. Contact Renesas Electronics sales office for information on derating operation when Ta = +85°C to +105°C. Derating is the systematic reduction of load for improved reliability.
Note 5. The upper limit of operating temperature is +85°C or +105°C, depending on the product. For details, see section 1.3, Part Numbering.

Table 2.2 Recommended operating conditions

Parameter	Symbol	Value	Min	Typ	Max	Unit
Power supply voltages	VCC	When USB is not used	2.7	-	3.6	V
		When USB is used	3.0	-	3.6	V
	VSS		-	0	-	V
USB power supply voltages	VCC_USB		-	VCC	-	V
	VSS_USB		-	0	-	V
VBATT power supply voltage	VBATT		1.65*2	-	3.6	V
Analog power supply voltages	AVCC0*1		-	VCC	-	V
	AVSS0		-	0	-	V

Note 1. Connect AVCC0 to VCC. When the A/D converter, the D/A converter, or the comparator are not in use, do not leave the AVCC0, VREFH/VREFH0, AVSS0, and VREFL/VREFL0 pins open. Connect the AVCC0 and VREFH/VREFH0 pins to VCC, and the AVSS0 and VREFL/VREFL0 pins to VSS, respectively.
Note 2. Low CL crystal cannot be used below VBATT = 1.8V.

2.2 DC Characteristics

2.2.1 T_j/T_a Definition

Table 2.3 DC characteristics
Conditions: Products with operating temperature (T_a) -40 to +105°C.

Parameter		Symbol	Typ	Max	Unit	Test conditions
Permissible junction temperature	100-pin LQFP 64-pin LQFP	T_j	-	125	°C	High-speed mode Low-speed mode Subosc-speed mode.
	64-pin QFN			117		
	100-pin LGA			105		

Note: Make sure that $T_j = T_a + \theta ja \times$ total power consumption (W),
where total power consumption = $(VCC - V_{OH}) \times \Sigma I_{OH} + V_{OL} \times \Sigma I_{OL} + I_{CC}max \times VCC$.
The upper limit of operating temperature is +85°C or +105°C, depending on the product. For details, see section 1.3, Part Numbering.

2.2.2 I/O V_{IH}, V_{IL}

Table 2.4 I/O V_{IH}, V_{IL}

Parameter					Symbol	Min	Typ	Max	Unit
Input voltage (except for Schmitt trigger input pins)	Peripheral function pin	EXTAL(external clock input), WAIT, SPI (except RSPCK)			V_{IH}	VCC × 0.8	-	-	V
					V_{IL}	-	-	VCC × 0.2	
		D00 to D07			V_{IH}	VCC × 0.7	-	-	
					V_{IL}	-	-	VCC × 0.3	
		IIC (SMBus)*1			V_{IH}	2.1	-	-	
					V_{IL}	-	-	0.8	
		IIC (SMBus)*2			V_{IH}	2.1	-	VCC + 3.6 (max 5.8)	
					V_{IL}	-	-	0.8	
Schmitt trigger input voltage	Peripheral function pin	IIC (except for SMBus)*1			V_{IH}	VCC × 0.7	-	-	V
					V_{IL}	-	-	VCC × 0.3	
					ΔV_T	VCC × 0.05	-	-	
		IIC (except for SMBus)*2			V_{IH}	VCC × 0.7	-	VCC + 3.6 (max 5.8)	V
					V_{IL}	-	-	VCC × 0.3	
					ΔV_T	VCC × 0.05	-	-	
		5 V-tolerant ports*3, *7			V_{IH}	VCC × 0.8	-	VCC + 3.6 (max 5.8)	
					V_{IL}	-	-	VCC × 0.2	
					ΔV_T	VCC × 0.05	-	-	
		RTCIC0, RTCIC1, RTCIC2	When using the battery backup function	When VBATT power supply is selected	V_{IH}	VBATT × 0.8	-	VBATT + 0.3	
					V_{IL}	-	-	VBATT × 0.2	
					ΔV_T	VBATT × 0.05	-	-	
				When VCC power supply is selected	V_{IH}	VCC × 0.8	-	Higher voltage either VCC + 0.3 V or VBATT + 0.3 V	
					V_{IL}	-	-	VCC × 0.2	
					ΔV_T	VCC × 0.05	-	-	
			When not using the battery backup function		V_{IH}	VCC × 0.8	-	VCC + 0.3	
					V_{IL}	-	-	VCC × 0.2	
					ΔV_T	VCC × 0.05	-	-	
		Other input pins*4			V_{IH}	VCC × 0.8	-	-	
					V_{IL}	-	-	VCC × 0.2	
					ΔV_T	VCC × 0.05	-	-	
	Ports	5 V-tolerant ports*5, *7			V_{IH}	VCC × 0.8	-	VCC + 3.6 (max 5.8)	V
					V_{IL}	-	-	VCC × 0.2	
		Other input pins*6			V_{IH}	VCC × 0.8	-	-	
					V_{IL}	-	-	VCC × 0.2	

Note 1. SCL1_B, SDA1_B (total 2 pins).
Note 2. SCL0_A, SDA0_A, SCL0_B, SDA0_B, SCL1_A, SDA1_A (total 6 pins).

Note 3. RES and peripheral function pins associated with P205, P206, P400, P401, P407 to P415, P708 (total 15 pins).
Note 4. All input pins except for the peripheral function pins already described in the table.
Note 5. P205, P206, P400, P401, P407 to P415, P708 (total 14 pins).
Note 6. All input pins except for the ports already described in the table.
Note 7. When VCC is less than 2.7 V, the input voltage of 5 V-tolerant ports should be less than 3.6 V, otherwise breakdown may occur because 5 V-tolerant ports are electrically controlled so as not to violate the breakdown voltage.

2.2.3 I/O I_{OH}, I_{OL}

Table 2.5 I/O I_{OH}, I_{OL}

Parameter			Symbol	Min	Typ	Max	Unit
Permissible output current (average value per pin)	Ports P008, P201	-	I_{OH}	-	-	-2.0	mA
			I_{OL}	-	-	2.0	mA
	Ports P014, P015	-	I_{OH}	-	-	-4.0	mA
			I_{OL}	-	-	4.0	mA
	Ports P205, P206, P407 to P415, P602, P708 (total 13 pins)	Low drive*1	I_{OH}	-	-	-2.0	mA
			I_{OL}	-	-	2.0	mA
		Middle drive*2	I_{OH}	-	-	-4.0	mA
			I_{OL}	-	-	4.0	mA
		High drive*3	I_{OH}	-	-	-20	mA
			I_{OL}	-	-	20	mA
	Other output pins*4	Low drive*1	I_{OH}	-	-	-2.0	mA
			I_{OL}	-	-	2.0	mA
		Middle drive*2	I_{OH}	-	-	-4.0	mA
			I_{OL}	-	-	4.0	mA
		High drive*3	I_{OH}	-	-	-16	mA
			I_{OL}	-	-	16	mA
Permissible output current (max value per pin)	Ports P008, P201	-	I_{OH}	-	-	-4.0	mA
			I_{OL}	-	-	4.0	mA
	Ports P014, P015	-	I_{OH}	-	-	-8.0	mA
			I_{OL}	-	-	8.0	mA
	Ports P205, P206, P407 to P415, P602, P708 (total 13 pins)	Low drive*1	I_{OH}	-	-	-4.0	mA
			I_{OL}	-	-	4.0	mA
		Middle drive*2	I_{OH}	-	-	-8.0	mA
			I_{OL}	-	-	8.0	mA
		High drive*3	I_{OH}	-	-	-40	mA
			I_{OL}	-	-	40	mA
	Other output pins*4	Low drive*1	I_{OH}	-	-	-4.0	mA
			I_{OL}	-	-	4.0	mA
		Middle drive*2	I_{OH}	-	-	-8.0	mA
			I_{OL}	-	-	8.0	mA
		High drive*3	I_{OH}	-	-	-32	mA
			I_{OL}	-	-	32	mA
Permissible output current (max value of total of all pins)	Maximum of all output pins		$\Sigma I_{OH\ (max)}$	-	-	-80	mA
			$\Sigma I_{OL\ (max)}$	-	-	80	mA

Caution: To protect the reliability of the MCU, the output current values should not exceed the values in this table. The average output current indicates the average value of current measured during 100 µs.

Note 1. This is the value when low driving ability is selected in the Port Drive Capability bit in the PmnPFS register. The selected driving ability is retained in Deep Software Standby mode.
Note 2. This is the value when middle driving ability is selected in the Port Drive Capability bit in the PmnPFS register. The selected driving ability is retained in Deep Software Standby mode.
Note 3. This is the value when high driving ability is selected in the Port Drive Capability bit in the PmnPFS register. The selected

driving ability is retained in Deep Software Standby mode.
Note 4. Except for P000 to P007, P200, which are input ports.

2.2.4 I/O V_{OH}, V_{OL}, and Other Characteristics

Table 2.6 I/O V_{OH}, V_{OL}, and other characteristics

Parameter			Symbol	Min	Typ	Max	Unit	Test conditions
Output voltage	IIC		V_{OL}	-	-	0.4	V	I_{OL} = 3.0 mA
			V_{OL}	-	-	0.6		I_{OL} = 6.0 mA
	IIC*1		V_{OL}	-	-	0.4		I_{OL} = 15.0 mA (ICFER.FMPE = 1)
			V_{OL}	-	0.4	-		I_{OL} = 20.0 mA (ICFER.FMPE = 1)
	Ports P205, P206, P407 to P415, P602, P708 (total of 13 pins)*2		V_{OH}	VCC - 1.0	-	-		I_{OH} = -20 mA VCC = 3.3 V
			V_{OL}	-	-	1.0		I_{OL} = 20 mA VCC = 3.3 V
	Other output pins		V_{OH}	VCC - 0.5	-	-		I_{OH} = -1.0 mA
			V_{OL}	-	-	0.5		I_{OL} = 1.0 mA
Input leakage current	RES		$\|I_{in}\|$	-	-	5.0	μA	V_{in} = 0 V V_{in} = 5.5 V
	Ports P000 to P002, P004 to P006, P200			-	-	1.0		V_{in} = 0 V V_{in} = VCC
	Ports P003, P007	Before initialization*3		-	-	45.0		V_{in} = 0 V V_{in} = VCC
		After initialization*4		-	-	1.0		V_{in} = 0 V V_{in} = VCC
Three-state leakage current (off state)	5 V-tolerant ports		$\|I_{TSI}\|$	-	-	5.0	μA	V_{in} = 0 V V_{in} = 5.5 V
	Other ports (except for ports P000 to P007, P200)			-	-	1.0		V_{in} = 0 V V_{in} = VCC
Input pull-up MOS current	Ports P0 to P7 (except for ports P000 to P007)		I_p	-300	-	-10	μA	VCC = 2.7 to 3.6 V V_{in} = 0 V
Input capacitance	USB_DP, USB_DM, and ports P003, P007, P014, P015, P400, P401		C_{in}	-	-	16	pF	Vbias = 0 V Vamp = 20 mV f = 1 MHz T_a = 25°C
	Other input pins			-	-	8		

Note 1. SCL0_A, SDA0_A (total 2 pins).
Note 2. This is the value when high driving ability is selected in the Port Drive Capability bit in the PmnPFS register. The selected driving ability is retained in Deep Software Standby mode.
Note 3. P0nPFS.ASEL(n = 3 or 7) = 1
Note 4. P0nPFS.ASEL(n = 3 or 7) = 0

2.2.5 Operating and Standby Current

Table 2.7 Operating and standby current (1 of 2)

Parameter				Symbol	Min	Typ	Max	Unit	Test conditions
Supply current*1	High-speed mode	Maximum*2		I_{CC}*3	-	-	87	mA	ICLK = 120 MHz PCLKA = 120 MHz PCLKB = 60 MHz PCLKC = 60 MHz PCLKD = 120 MHz FCLK = 60 MHz BCLK = 120 MHz
		CoreMark®*5			-	17	-		
		Normal mode	All peripheral clocks enabled, while (1) code executing from flash*4		-	24	-		
			All peripheral clocks disabled, while (1) code executing from flash*5, *6		-	12	-		
		Sleep mode*5, *6			-	9	33.5		
		Increase during BGO operation	Data flash P/E		-	6	-		
			Code flash P/E		-	8	-		
	Low-speed mode*5				-	1.2	-		ICLK = 1 MHz
	Subosc-speed mode*5				-	1.0	-		ICLK = 32.768 kHz
	Software Standby mode				-	1.3	13		Ta ≤ 85°C
					-	1.3	21		Ta ≤ 105°C
	Deep Software Standby mode	Power supplied to Standby SRAM and USB resume detecting unit			-	28	65	μA	Ta ≤ 85°C
					-	28	93		Ta ≤ 105°C
		Power not supplied to SRAM or USB resume detecting unit	Power-on reset circuit low power function disabled		-	11.6	28		Ta ≤ 85°C
					-	11.6	32		Ta ≤ 105°C
			Power-on reset circuit low power function enabled		-	4.9	21		Ta ≤ 85°C
					-	4.9	26		Ta ≤ 105°C
		Increase when the RTC and AGT are operating	When the low-speed on-chip oscillator (LOCO) is in use		-	4.4	-		-
			When a crystal oscillator for low clock loads is in use		-	1.0	-		-
			When a crystal oscillator for standard clock loads is in use		-	1.4	-		-
	RTC operating while VCC is off (with the battery backup function, only the RTC and sub-clock oscillator operate)		When a crystal oscillator for low clock loads is in use		-	0.9	-		VBATT = 1.8 V, VCC = 0 V
					-	1.1	-		VBATT = 3.3 V, VCC = 0 V
			When a crystal oscillator for standard clock loads is in use		-	1.0	-		VBATT = 1.8 V, VCC = 0 V
					-	1.6	-		VBATT = 3.3 V, VCC = 0 V
Analog power supply current	During 12-bit A/D conversion			AI_{CC}	-	0.8	1.1	mA	-
	During 12-bit A/D conversion with S/H amp				-	2.3	3.3	mA	-
	PGA (1ch)				-	1	3	mA	-
	ACMPHS (1 unit)				-	100	150	μA	-
	Temperature sensor				-	0.1	0.2	mA	-
	During D/A conversion (per unit)		Without AMP output		-	0.1	0.2	mA	-
			With AMP output		-	0.6	1.1	mA	-
	Waiting for A/D, D/A conversion (all units)				-	0.9	1.6	mA	-
	ADC12, DAC12 in standby modes (all units)*7				-	2	8	μA	-
Reference power supply current (VREFH0)	During 12-bit A/D conversion (unit 0)			AI_{REFH0}	-	70	120	μA	-
	Waiting for 12-bit A/D conversion (unit 0)				-	0.07	0.5	μA	-
	ADC12 in standby modes (unit 0)				-	0.07	0.5	μA	-
Reference power supply current (VREFH)	During 12-bit A/D conversion (unit 1)			AI_{REFH}	-	70	120	μA	-
	During D/A conversion (per unit)		Without AMP output		-	0.1	0.4	mA	-
			With AMP ouput		-	0.1	0.4	mA	-
	Waiting for 12-bit A/D (unit 1), D/A (all units) conversion				-	0.07	0.8	μA	-
	ADC12 unit 1 in standby modes				-	0.07	0.8	μA	-

Table 2.7 Operating and standby current (2 of 2)

Parameter			Symbol	Min	Typ	Max	Unit	Test conditions
USB operating current	Low speed	USB	$I_{CCUSBLS}$	-	3.5	6.5	mA	VCC_USB
	Full speed	USB	$I_{CCUSBFS}$	-	4.0	10.0	mA	VCC_USB

Note 1. Supply current values are with all output pins unloaded and all input pull-up MOS transistors in the off state.
Note 2. Measured with clocks supplied to the peripheral functions. This does not include the BGO operation.
Note 3. I_{CC} depends on f (ICLK) as follows. (ICLK:PCLKA:PCLKB:PCLKC:PCLKD:BCK:EBCLK = 2:2:1:1:2:1:1)
I_{CC} Max. = 0.53 x f + 23 (maximum operation in High-speed mode)
I_{CC} Typ. = 0.08 x f + 2.4 (normal operation in High-speed mode)
I_{CC} Typ. = 0.1 x f + 1.1 (Low-speed mode)
I_{CC} Max. = 0.09 x f + 23 (Sleep mode).
Note 4. This does not include the BGO operation.
Note 5. Supply of the clock signal to peripherals is stopped in this state. This does not include the BGO operation.
Note 6. FCLK, BCLK, PCLKA, PCLKB, PCLKC, and PCLKD are set to divided by 64 (3.75 MHz).
Note 7. When the MCU is in Software Standby mode or the MSTPCRD.MSTPD16 (12-bit A/D Converter 0 Module Stop bit) and MSTPCRD.MSTPD15 (12-bit A/D Converter 1 Module Stop bit) are in the module-stop state.
See section 42.6.8, Available functions and register settings of AN000 to AN002, AN007, AN100 to AN102, and AN107 in User's Manual.

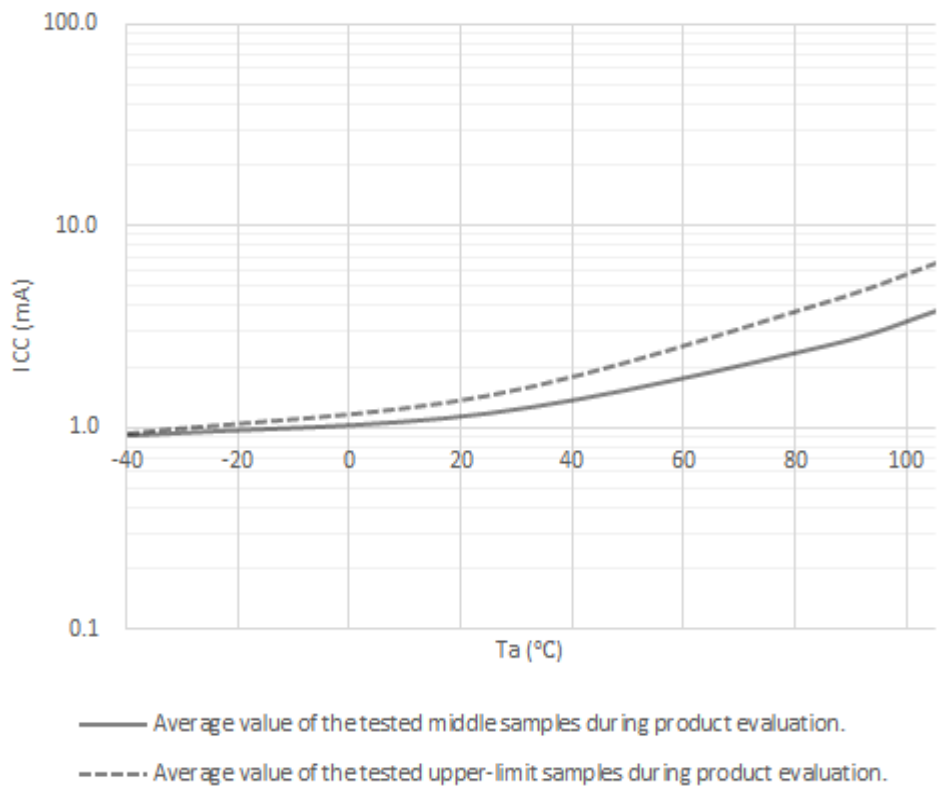

Figure 2.2 Temperature dependency in Software Standby mode (reference data)

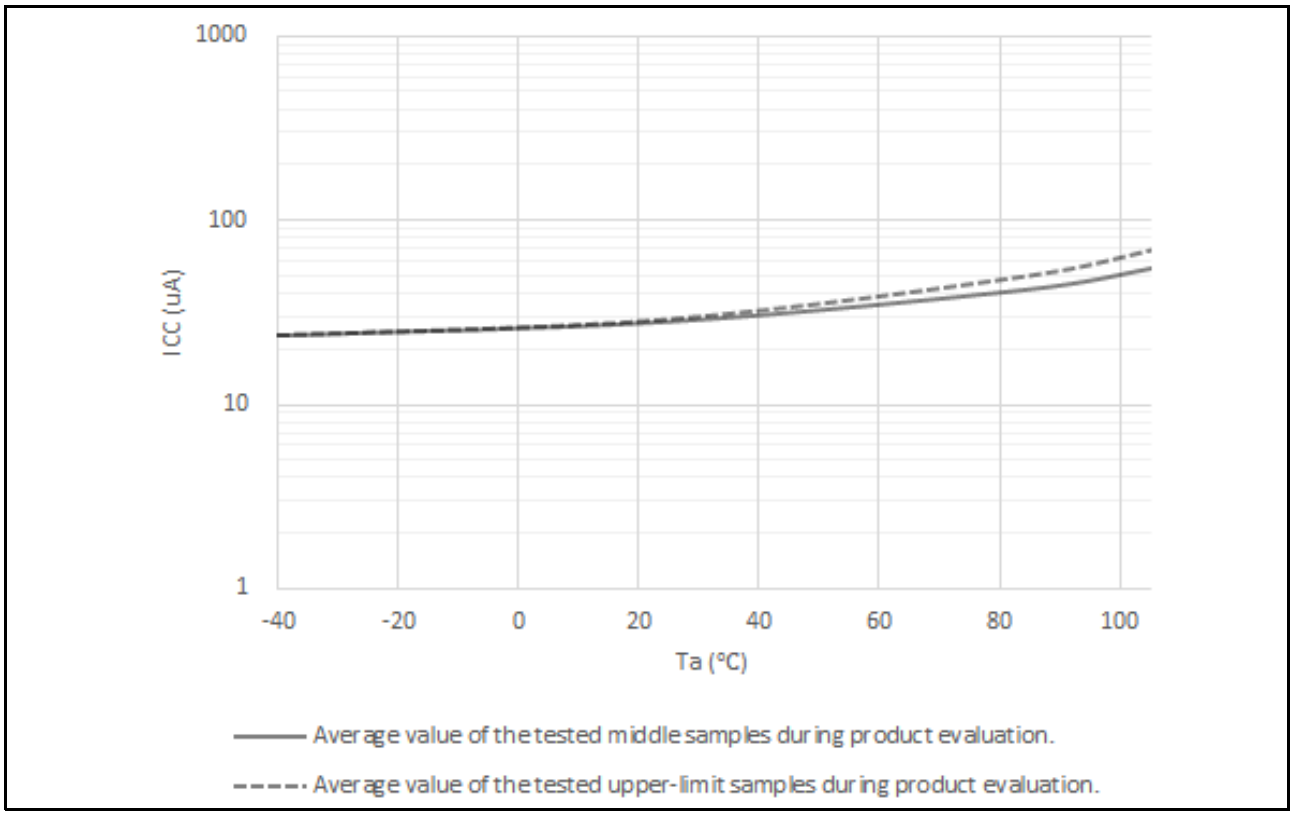

Figure 2.3 **Temperature dependency in Deep Software Standby mode, power supplied to standby SRAM and USB resume detecting unit (reference data)**

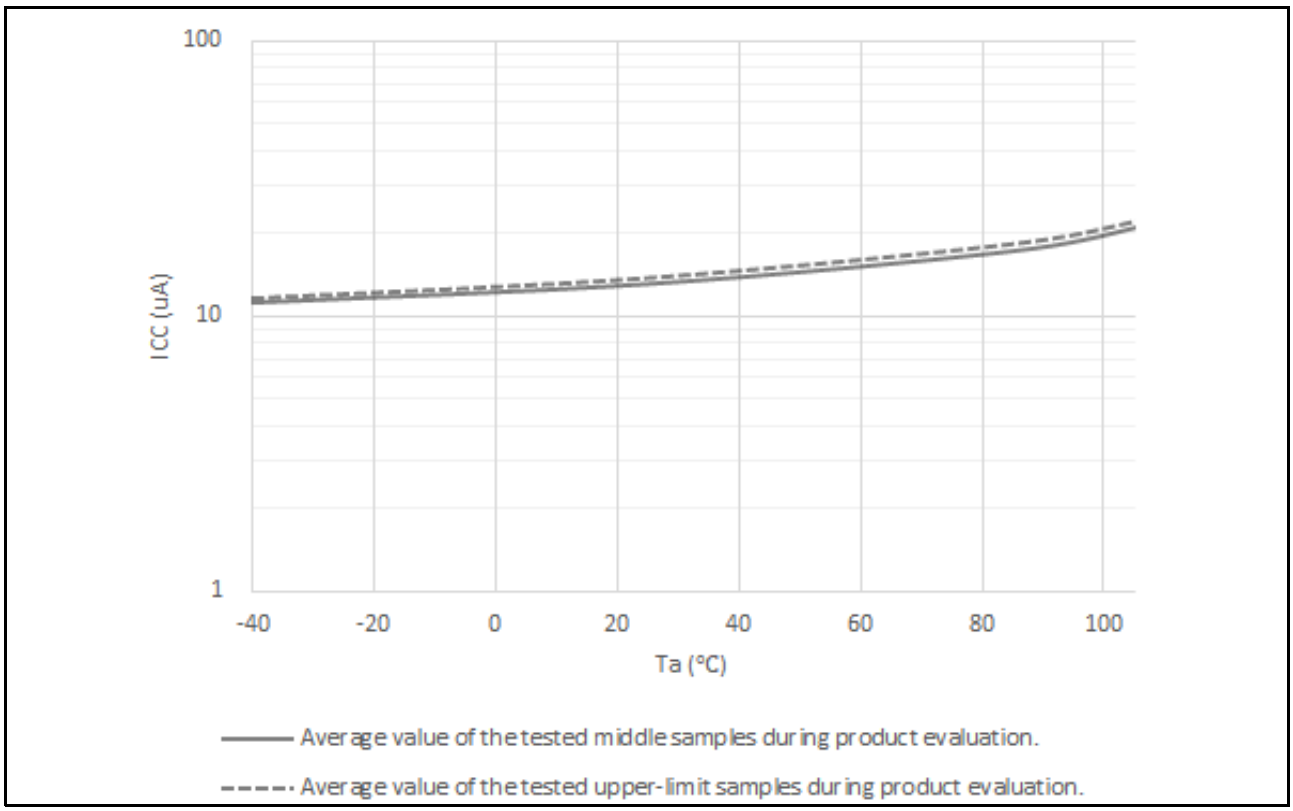

Figure 2.4 **Temperature dependency in Deep Software Standby mode, power not supplied to SRAM or USB resume detecting unit, power-on reset circuit low power function disabled (reference data)**

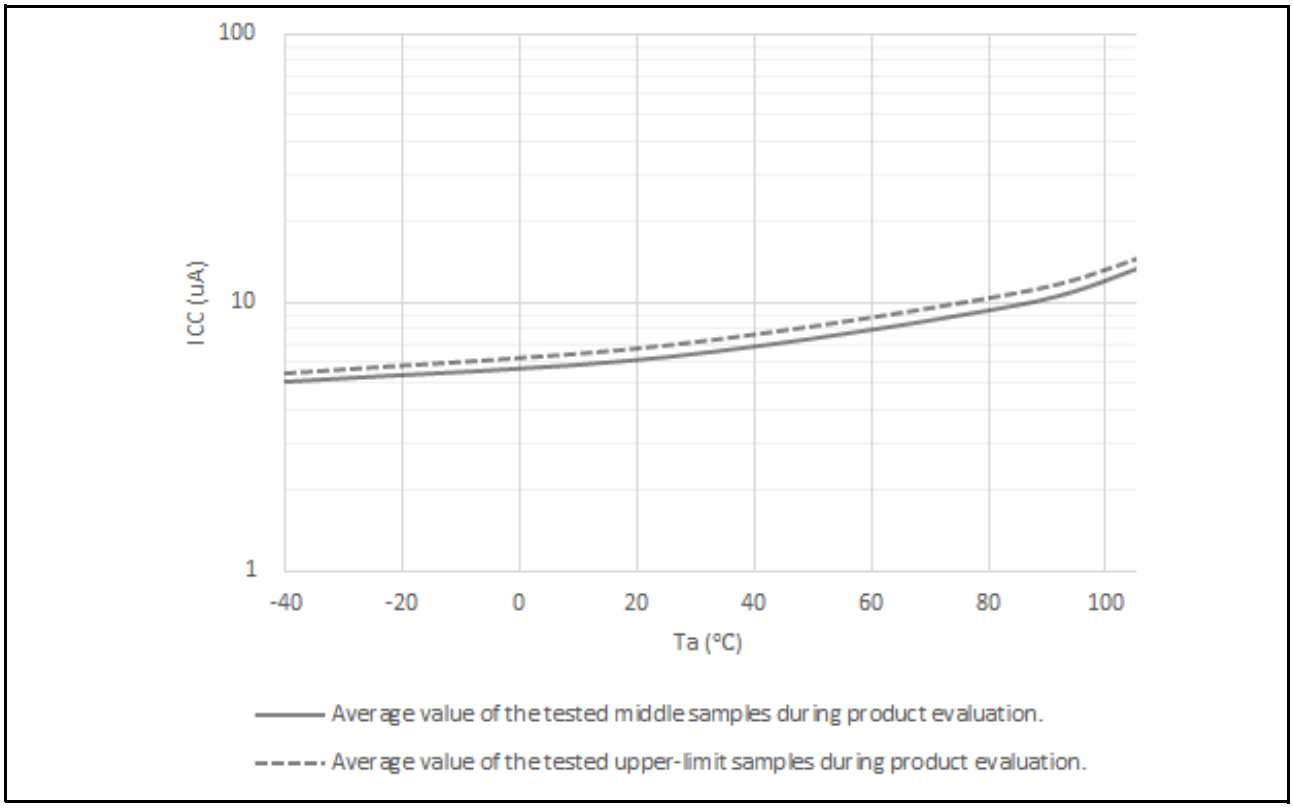

Figure 2.5 Temperature dependency in Deep Software Standby mode, power not supplied to SRAM or USB resume detecting unit, power-on reset circuit low power function enabled (reference data)

2.2.6 VCC Rise and Fall Gradient and Ripple Frequency

Table 2.8 Rise and fall gradient characteristics

Parameter		Symbol	Min	Typ	Max	Unit	Test conditions
VCC rising gradient	Voltage monitor 0 reset disabled at startup	SrVCC	0.0084	-	20	ms/V	-
	Voltage monitor 0 reset enabled at startup		0.0084	-	-		-
	SCI/USB boot mode*1		0.0084	-	20		-
VCC falling gradient*2		SfVCC	0.0084	-	-	ms/V	-

Note 1. At boot mode, the reset from voltage monitor 0 is disabled regardless of the value of the OFS1.LVDAS bit.
Note 2. This applies when VBATT is used.

Table 2.9 Rise and fall gradient and ripple frequency characteristics

The ripple voltage must meet the allowable ripple frequency $f_{r(VCC)}$ within the range between the VCC upper limit (3.6 V) and lower limit (2.7 V). When the VCC change exceeds VCC ±10%, the allowable voltage change rising and falling gradient dt/dVCC must be met.

Parameter	Symbol	Min	Typ	Max	Unit	Test conditions
Allowable ripple frequency	$f_{r\ (VCC)}$	-	-	10	kHz	Figure 2.6 $V_{r\ (VCC)} \leq VCC \times 0.2$
		-	-	1	MHz	Figure 2.6 $V_{r\ (VCC)} \leq VCC \times 0.08$
		-	-	10	MHz	Figure 2.6 $V_{r\ (VCC)} \leq VCC \times 0.06$
Allowable voltage change rising and falling gradient	dt/dVCC	1.0	-	-	ms/V	When VCC change exceeds VCC ±10%

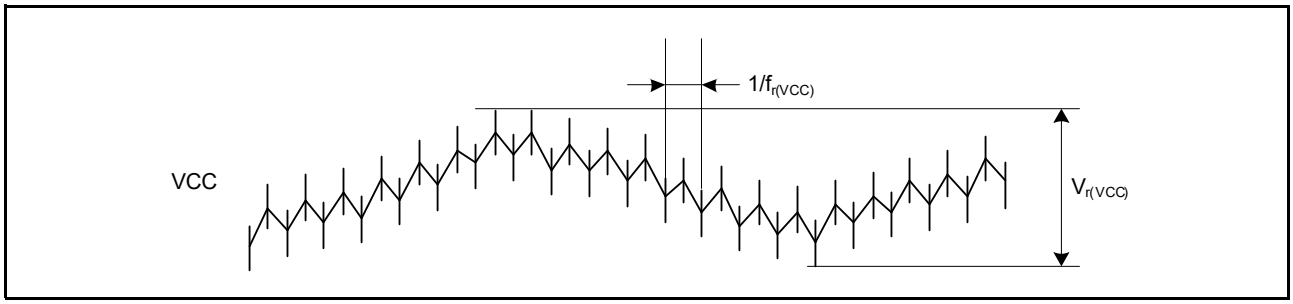

Figure 2.6 Ripple waveform

2.3 AC Characteristics

2.3.1 Frequency

Table 2.10 Operation frequency value in high-speed mode

Parameter		Symbol	Min	Typ	Max	Unit
Operation frequency	System clock (ICLK*2)	f	-	-	120	MHz
	Peripheral module clock (PCLKA)*2		-	-	120	
	Peripheral module clock (PCLKB)*2		-	-	60	
	Peripheral module clock (PCLKC)*2		-*3	-	60	
	Peripheral module clock (PCLKD)*2		-	-	120	
	Flash interface clock (FCLK)*2		-*1	-	60	
	External bus clock (BCLK)*2		-	-	120	
	EBCLK pin output		-	-	60	

Note 1. FCLK must run at a frequency of at least 4 MHz when programming or erasing the flash memory.
Note 2. See section 9, Clock Generation Circuit in User's Manual for the relationship between the ICLK, PCLKA, PCLKB, PCLKC, PCLKD, FCLK, and BCLK frequencies.
Note 3. When the ADC12 is used, the PCLKC frequency must be at least 1 MHz.

Table 2.11 Operation frequency value in low-speed mode

Parameter		Symbol	Min	Typ	Max	Unit
Operation frequency	System clock (ICLK)*2	f	-	-	1	MHz
	Peripheral module clock (PCLKA)*2		-	-	1	
	Peripheral module clock (PCLKB)*2		-	-	1	
	Peripheral module clock (PCLKC)*2,*3		-*3	-	1	
	Peripheral module clock (PCLKD)*2		-	-	1	
	Flash interface clock (FCLK)*1, *2		-	-	1	
	External bus clock (BCLK)		-	-	1	
	EBCLK pin output		-	-	1	

Note 1. Programming or erasing the flash memory is disabled in Low-speed mode.
Note 2. See section 9, Clock Generation Circuit in User's Manual for the relationship between the ICLK, PCLKA, PCLKB, PCLKC, PCLKD, FCLK, and BCLK frequencies.
Note 3. When the ADC12 is used, the PCLKC frequency must be set to at least 1 MHz.

Table 2.12 Operation frequency value in Subosc-speed mode

Parameter		Symbol	Min	Typ	Max	Unit
Operation frequency	System clock (ICLK)*2	f	29.4	-	36.1	kHz
	Peripheral module clock (PCLKA)*2		-	-	36.1	
	Peripheral module clock (PCLKB)*2		-	-	36.1	
	Peripheral module clock (PCLKC)*2,*3		-	-	36.1	
	Peripheral module clock (PCLKD)*2		-	-	36.1	
	Flash interface clock (FCLK)*1, *2		29.4	-	36.1	
	External bus clock (BCLK)*2		-	-	36.1	
	EBCLK pin output		-	-	36.1	

Note 1. Programming or erasing the flash memory is disabled in Subosc-speed mode.
Note 2. See section 9, Clock Generation Circuit in User's Manual for the relationship between the ICLK, PCLKA, PCLKB, PCLKC, PCLKD, FCLK, and BCLK frequencies.
Note 3. The ADC12 cannot be used.

2.3.2 Clock Timing

Table 2.13 Clock timing except for sub-clock oscillator (1 of 2)

Parameter		Symbol	Min	Typ	Max	Unit	Test conditions
EBCLK pin output cycle time		t_{Bcyc}	16.6	-	-	ns	Figure 2.7
EBCLK pin output high pulse width		t_{CH}	3.3	-	-	ns	
EBCLK pin output low pulse width		t_{CL}	3.3	-	-	ns	
EBCLK pin output rise time		t_{Cr}	-	-	5.0	ns	
EBCLK pin output fall time		t_{Cf}	-	-	5.0	ns	
EXTAL external clock input cycle time		t_{EXcyc}	41.66	-	-	ns	Figure 2.8
EXTAL external clock input high pulse width		t_{EXH}	15.83	-	-	ns	
EXTAL external clock input low pulse width		t_{EXL}	15.83	-	-	ns	
EXTAL external clock rise time		t_{EXr}	-	-	5.0	ns	
EXTAL external clock fall time		t_{EXf}	-	-	5.0	ns	
Main clock oscillator frequency		f_{MAIN}	8	-	24	MHz	-
Main clock oscillation stabilization wait time (crystal) *1		$t_{MAINOSCWT}$	-	-	-*1	ms	Figure 2.9
LOCO clock oscillation frequency		f_{LOCO}	29.4912	32.768	36.0448	kHz	-
LOCO clock oscillation stabilization wait time		t_{LOCOWT}	-	-	60.4	μs	Figure 2.10
ILOCO clock oscillation frequency		f_{ILOCO}	13.5	15	16.5	kHz	-
MOCO clock oscillation frequency		F_{MOCO}	6.8	8	9.2	MHz	-
MOCO clock oscillation stabilization wait time		t_{MOCOWT}	-	-	15.0	μs	-
HOCO clock oscillator oscillation frequency	Without FLL	f_{HOCO16}	15.78	16	16.22	MHz	-20 ≤ Ta ≤ 105°C
		f_{HOCO18}	17.75	18	18.25		
		f_{HOCO20}	19.72	20	20.28		
		f_{HOCO16}	15.71	16	16.29		-40 ≤ Ta ≤ -20°C
		f_{HOCO18}	17.68	18	18.32		
		f_{HOCO20}	19.64	20	20.36		
	With FLL	f_{HOCO16}	15.960	16	16.040		-40 ≤ Ta ≤ 105°C Sub-clock frequency accuracy is ±50 ppm.
		f_{HOCO18}	17.955	18	18.045		
		f_{HOCO20}	19.950	20	20.050		
HOCO clock oscillation stabilization wait time*2		t_{HOCOWT}	-	-	64.7	μs	-
FLL stabilization wait time		t_{FLLWT}	-	-	1.8	ms	-
PLL clock frequency		f_{PLL}	120	-	240	MHz	-

Table 2.13 Clock timing except for sub-clock oscillator (2 of 2)

Parameter	Symbol	Min	Typ	Max	Unit	Test conditions
PLL clock oscillation stabilization wait time	t_{PLLWT}	-	-	174.9	μs	Figure 2.11

Note 1. When setting up the main clock oscillator, ask the oscillator manufacturer for an oscillation evaluation, and use the results as the recommended oscillation stabilization time. Set the MOSCWTCR register to a value equal to or greater than the recommended value.
After changing the setting in the MOSCCR.MOSTP bit to start main clock operation, read the OSCSF.MOSCSF flag to confirm that it is 1, and then start using the main clock oscillator.

Note 2. This is the time from release from reset state until the HOCO oscillation frequency (fHOCO) reaches the range for guaranteed operation.

Table 2.14 Clock timing for the sub-clock oscillator

Parameter	Symbol	Min	Typ	Max	Unit	Test conditions
Sub-clock frequency	f_{SUB}	-	32.768	-	kHz	-
Sub-clock oscillation stabilization wait time	$t_{SUBOSCWT}$	-	-	-*1	s	Figure 2.12

Note 1. When setting up the sub-clock oscillator, ask the oscillator manufacturer for an oscillation evaluation and use the results as the recommended oscillation stabilization time.
After changing the setting in the SOSCCR.SOSTP bit to start sub-clock operation, only start using the sub-clock oscillator after the sub-clock oscillation stabilization time elapses with an adequate margin. A value that is two times the value shown is recommended.

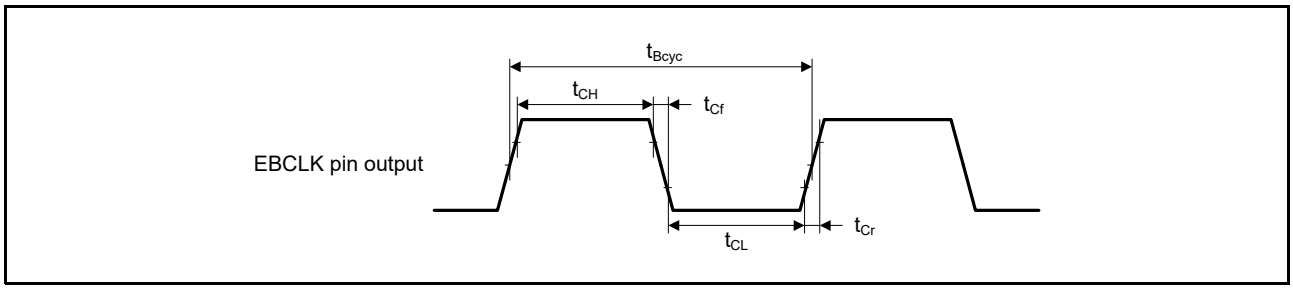

Figure 2.7 EBCLK output timing

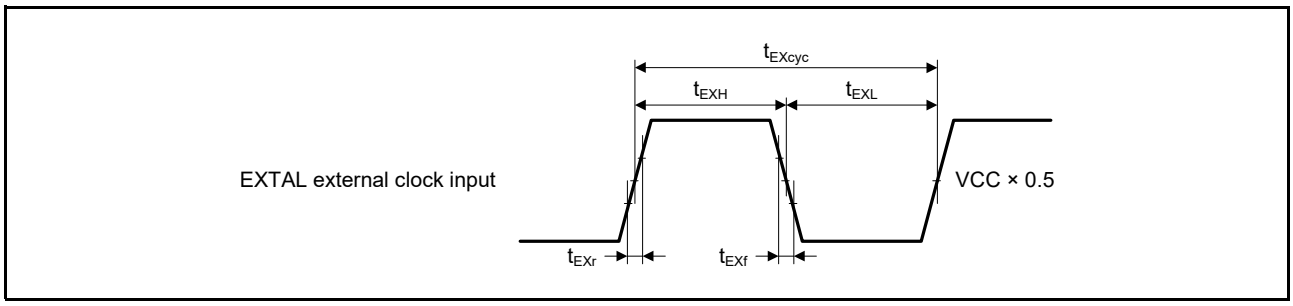

Figure 2.8 EXTAL external clock input timing

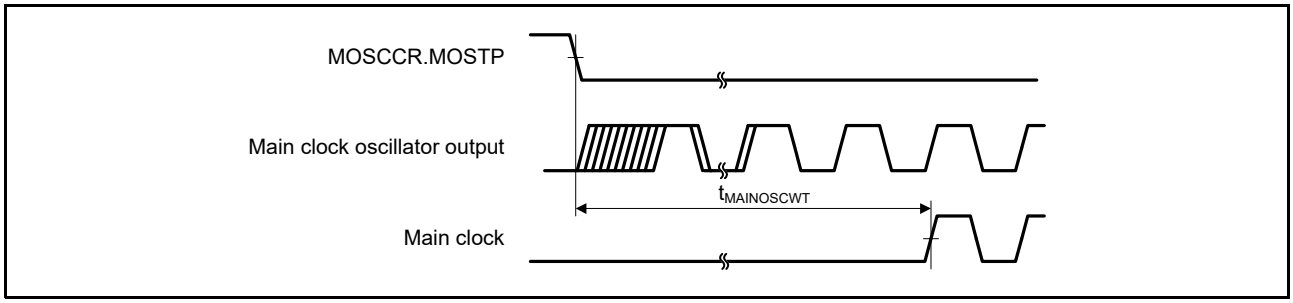

Figure 2.9 Main clock oscillation start timing

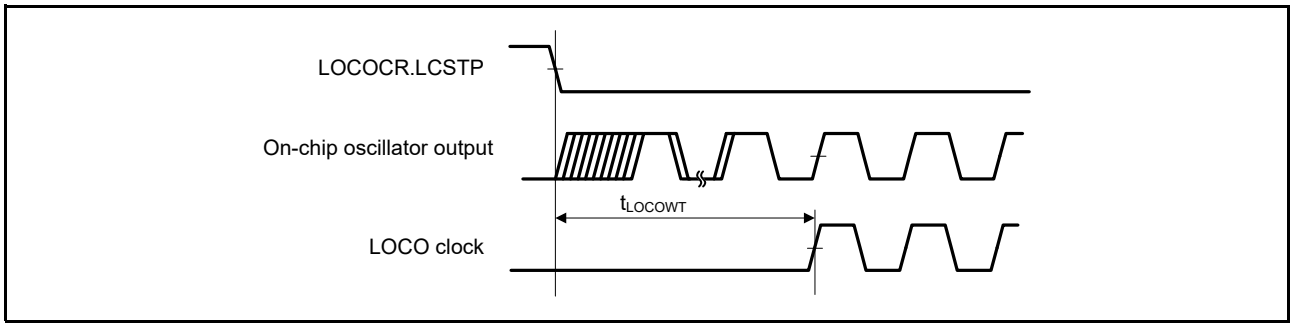

Figure 2.10 LOCO clock oscillation start timing

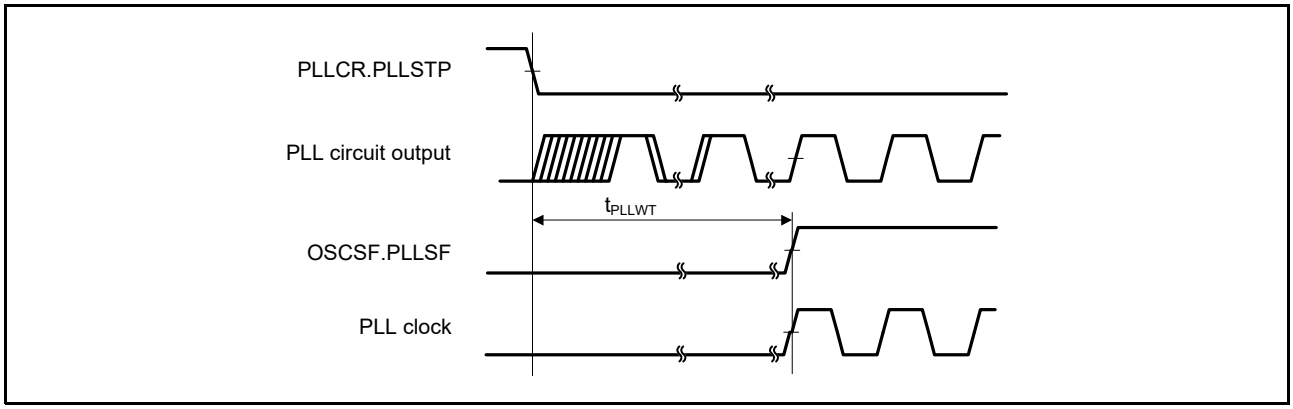

Figure 2.11 PLL clock oscillation start timing

Note: Only operate the PLL after the main clock oscillation has stabilized.

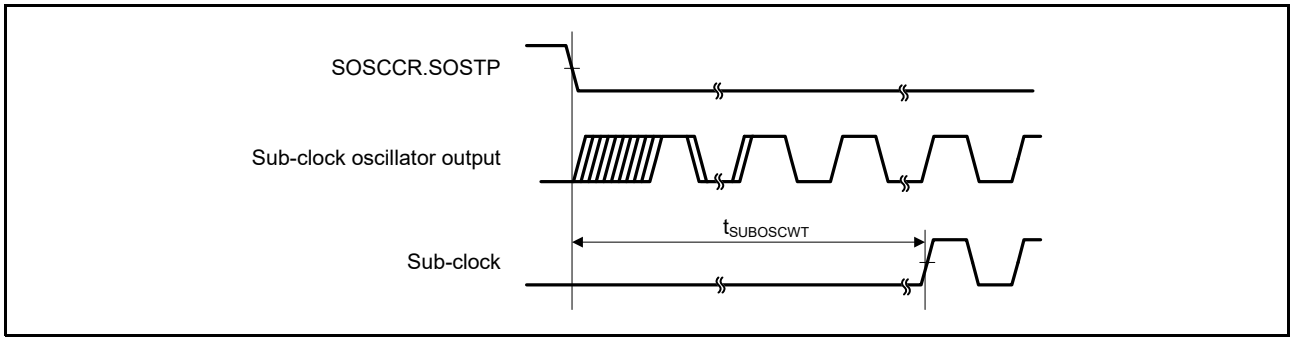

Figure 2.12 Sub-clock oscillation start timing

2.3.3 Reset Timing

Table 2.15 Reset timing (1 of 2)

Parameter		Symbol	Min	Typ	Max	Unit	Test conditions
RES pulse width	Power-on	t_{RESWP}	1	-	-	ms	Figure 2.13
	Deep Software Standby mode	t_{RESWD}	0.6	-	-	ms	Figure 2.14
	Software Standby mode, Subosc-speed mode	t_{RESWS}	0.3	-	-	ms	
	All other	t_{RESW}	200	-	-	μs	
Wait time after RES cancellation		t_{RESWT}	-	29	32	μs	Figure 2.13

Table 2.15 Reset timing (2 of 2)

Parameter	Symbol	Min	Typ	Max	Unit	Test conditions
Wait time after internal reset cancellation (IWDT reset, WDT reset, software reset, SRAM parity error reset, SRAM ECC error reset, bus master MPU error reset, bus slave MPU error reset, stack pointer error reset)	t_{RESW2}	-	320	390	μs	-

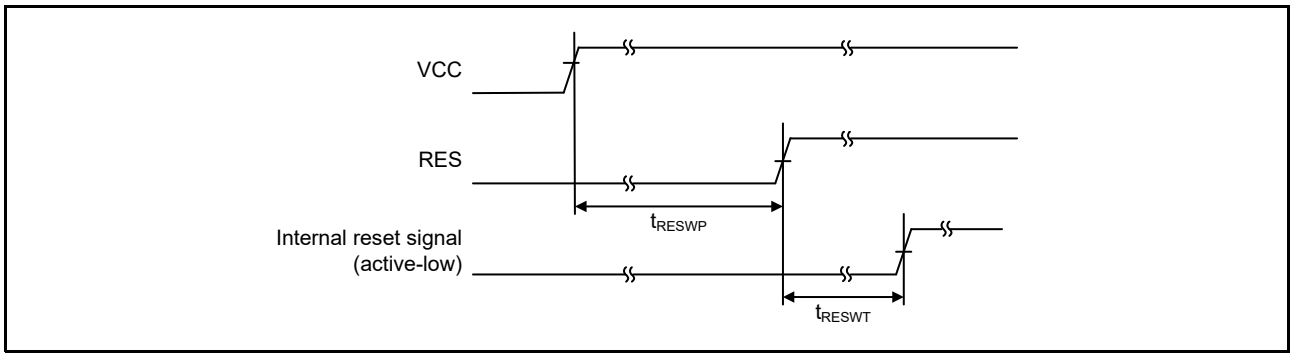

Figure 2.13 Power-on reset timing

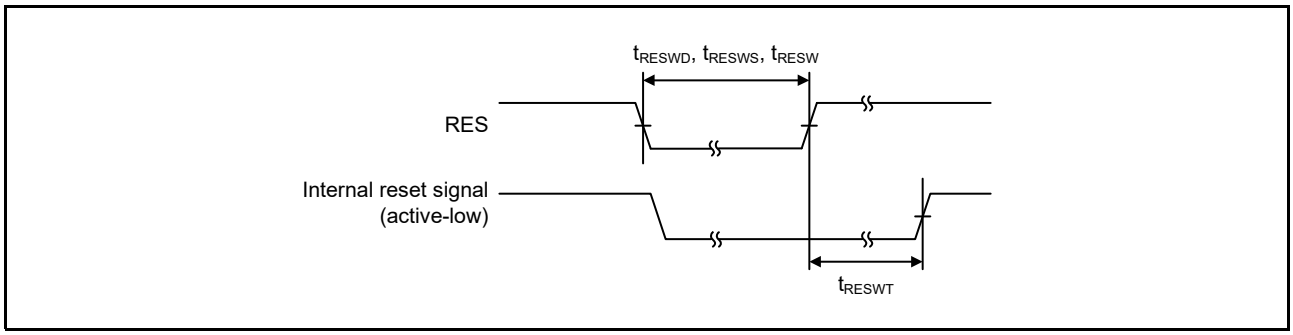

Figure 2.14 Reset input timing

2.3.4 Wakeup Timing

Table 2.16 Timing of recovery from low power modes (1 of 2)

Parameter			Symbol	Min	Typ	Max	Unit	Test conditions
Recovery time from Software Standby mode*1	Crystal resonator connected to main clock oscillator	System clock source is main clock oscillator*2	t_{SBYMC}	-	2.4*9	2.8*9	ms	Figure 2.15 The division ratio of all oscillators is 1.
		System clock source is PLL with main clock oscillator*3	t_{SBYPC}	-	2.7*9	3.2*9	ms	
	External clock input to main clock oscillator	System clock source is main clock oscillator*4	t_{SBYEX}	-	230*9	280*9	μs	
		System clock source is PLL with main clock oscillator*5	t_{SBYPE}	-	570*9	700*9	μs	
	System clock source is sub-clock oscillator*8		t_{SBYSC}	-	1.2*9	1.3*9	ms	
	System clock source is LOCO*8		t_{SBYLO}	-	1.2*9	1.4*9	ms	
	System clock source is HOCO*6		t_{SBYHO}	-	240*9, *10	300 *9, *10	μs	
	System clock source is MOCO*7		t_{SBYMO}	-	220*9	300*9	μs	

Table 2.16 Timing of recovery from low power modes (2 of 2)

Parameter		Symbol	Min	Typ	Max	Unit	Test conditions
Recovery time from Deep Software Standby mode		t_{DSBY}	-	0.65	1.0	ms	Figure 2.16
Wait time after cancellation of Deep Software Standby mode		t_{DSBYWT}	34	-	35	t_{cyc}	
Recovery time from Software Standby mode to Snooze mode	High-speed mode when system clock source is HOCO (20 MHz)	t_{SNZ}	-	35*9, *10	70 *9, *10	μs	Figure 2.17
	High-speed mode when system clock source is MOCO (8 MHz)	t_{SNZ}	-	11*9	14*9	μs	

Note 1. The recovery time is determined by the system clock source. When multiple oscillators are active, the recovery time can be determined with the following equation:
Total recovery time = recovery time for an oscillator as the system clock source + the longest oscillation stabilization time of any oscillators requiring longer stabilization times than the system clock source + 2 LOCO cycles (when LOCO is operating) + 3 SOSC cycles (when Subosc is oscillating and MSTPC0 = 0 (CAC module stop)).

Note 2. When the frequency of the crystal is 24 MHz (Main Clock Oscillator Wait Control Register (MOSCWTCR) is set to 05h). For other settings (MOSCWTCR is set to Xh), the recovery time can be determined with the following equation:
t_{SBYMC} (MOSCWTCR = Xh) = t_{SBYMC} (MOSCWTCR = 05h) + ($t_{MAINOSCWT}$ (MOSCWTCR = Xh) - $t_{MAINOSCWT}$ (MOSCWTCR = 05h))

Note 3. When the frequency of PLL is 240 MHz (Main Clock Oscillator Wait Control Register (MOSCWTCR) is set to 05h). For other settings (MOSCWTCR is set to Xh), the recovery time can be determined with the following equation:
t_{SBYMC} (MOSCWTCR = Xh) = t_{SBYMC} (MOSCWTCR = 05h) + ($t_{MAINOSCWT}$ (MOSCWTCR = Xh) - $t_{MAINOSCWT}$ (MOSCWTCR = 05h))

Note 4. When the frequency of the external clock is 24 MHz (Main Clock Oscillator Wait Control Register (MOSCWTCR) is set to 01h). For other settings (MOSCWTCR is set to Xh), the recovery time can be determined with the following equation:
t_{SBYMC} (MOSCWTCR = Xh) = t_{SBYMC} (MOSCWTCR = 01h) + ($t_{MAINOSCWT}$ (MOSCWTCR = Xh) - $t_{MAINOSCWT}$ (MOSCWTCR = 01h))

Note 5. When the frequency of PLL is 240 MHz (Main Clock Oscillator Wait Control Register (MOSCWTCR) is set to 01h). For other settings (MOSCWTCR is set to Xh), the recovery time can be determined with the following equation:
t_{SBYMC} (MOSCWTCR = Xh) = t_{SBYMC} (MOSCWTCR = 01h) + ($t_{MAINOSCWT}$ (MOSCWTCR = Xh) - $t_{MAINOSCWT}$ (MOSCWTCR = 01h))

Note 6. The HOCO frequency is 20 MHz.

Note 7. The MOCO frequency is 8 MHz.

Note 8. In Subosc-speed mode, the sub-clock oscillator or LOCO continues oscillating in Software Standby mode.

Note 9. When the SNZCR.RXDREQEN bit is set to 0, the following time is added as the power supply recovery time:
STCONR.STCON[1:0] = 00b:16 μs (typical), 34 μs (maximum)
STCONR.STCON[1:0] = 11b:16 μs (typical), 104 μs (maximum).

Note 10. When the SNZCR.RXDREQEN bit is set to 0, 16 μs (typical) or 18 μs (maximum) is added as the HOCO wait time.

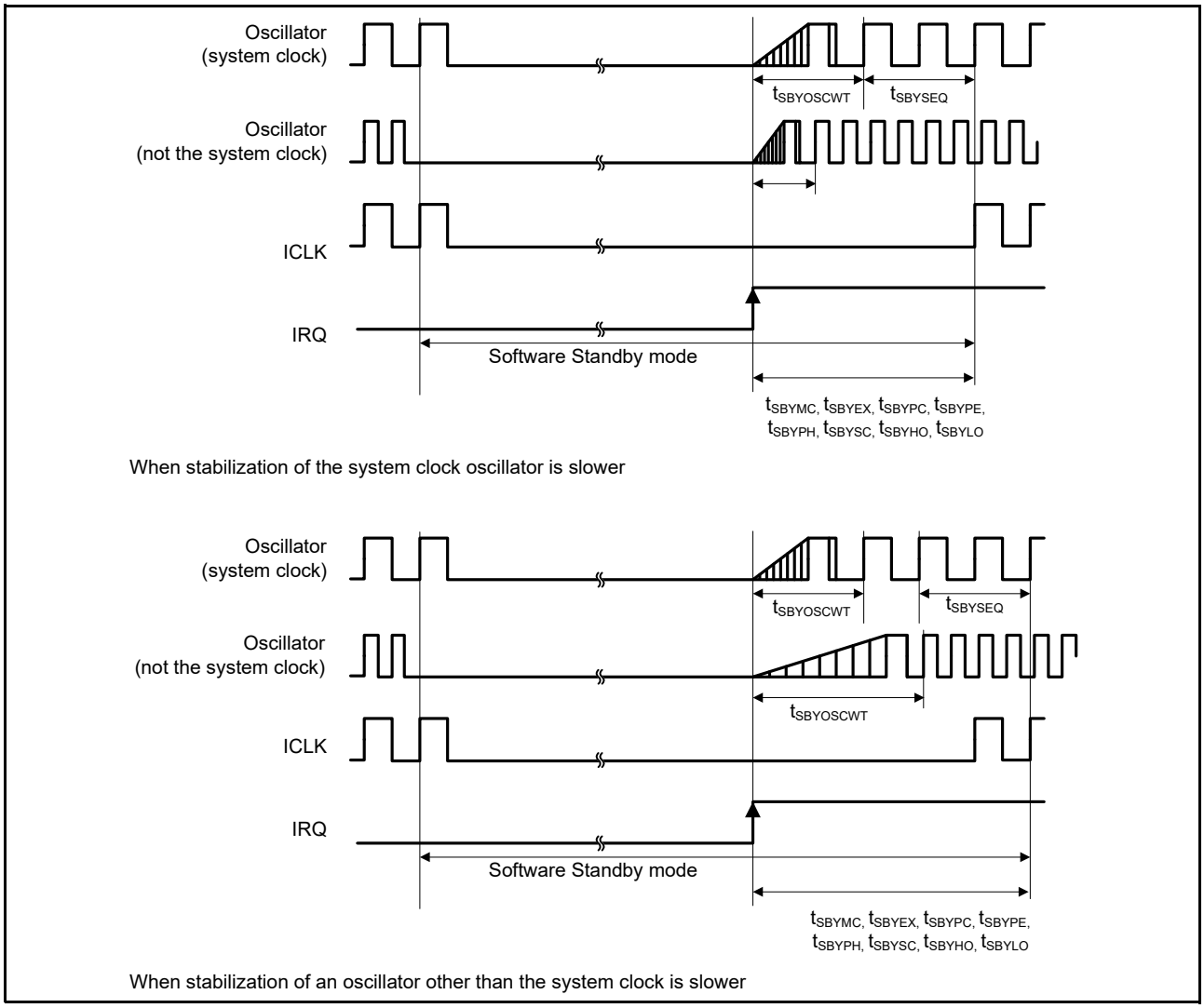

Figure 2.15 Software Standby mode cancellation timing

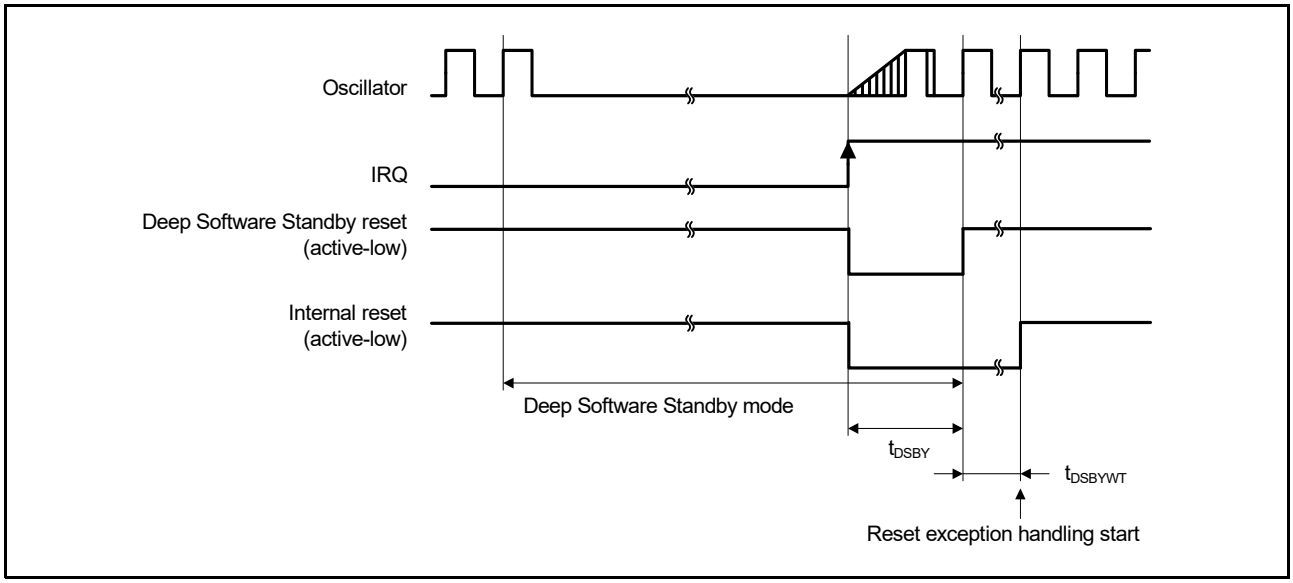

Figure 2.16 Deep Software Standby mode cancellation timing

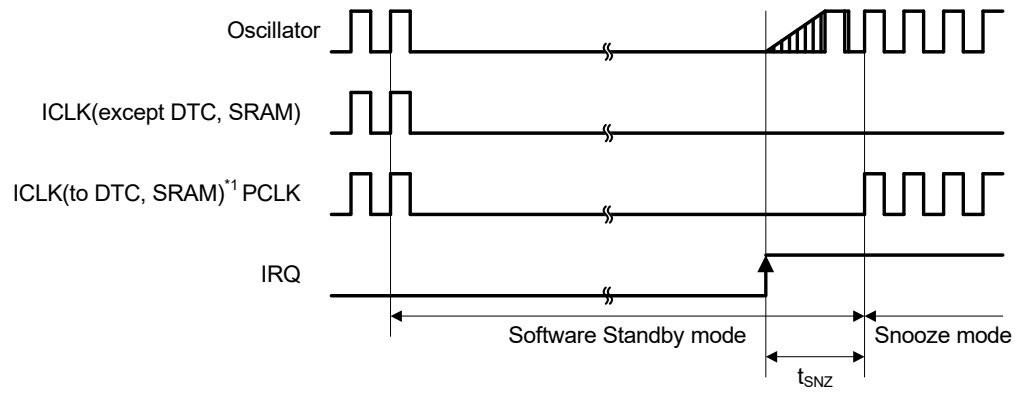

Note 1. When SNZCR.SNZDTCEN is set to 1, ICLK is supplied to DTC and SRAM.

Figure 2.17 Recovery timing from Software Standby mode to Snooze mode

2.3.5 NMI and IRQ Noise Filter

Table 2.17 NMI and IRQ noise filter

Parameter	Symbol	Min	Typ	Max	Unit	Test conditions	
NMI pulse width	t_{NMIW}	200	-	-	ns	NMI digital filter disabled	$t_{Pcyc} \times 2 \leq 200$ ns
		$t_{Pcyc} \times 2$*1	-	-			$t_{Pcyc} \times 2 > 200$ ns
		200	-	-		NMI digital filter enabled	$t_{NMICK} \times 3 \leq 200$ ns
		$t_{NMICK} \times 3.5$*2	-	-			$t_{NMICK} \times 3 > 200$ ns
IRQ pulse width	t_{IRQW}	200	-	-	ns	IRQ digital filter disabled	$t_{Pcyc} \times 2 \leq 200$ ns
		$t_{Pcyc} \times 2$*1	-	-			$t_{Pcyc} \times 2 > 200$ ns
		200	-	-		IRQ digital filter enabled	$t_{IRQCK} \times 3 \leq 200$ ns
		$t_{IRQCK} \times 3.5$*3	-	-			$t_{IRQCK} \times 3 > 200$ ns

Note: 200 ns minimum in Software Standby mode.
Note: If the clock source is switched, add 4 clock cycles of the switched source.
Note 1. t_{Pcyc} indicates the PCLKB cycle.
Note 2. t_{NMICK} indicates the cycle of the NMI digital filter sampling clock.
Note 3. t_{IRQCK} indicates the cycle of the IRQi digital filter sampling clock.

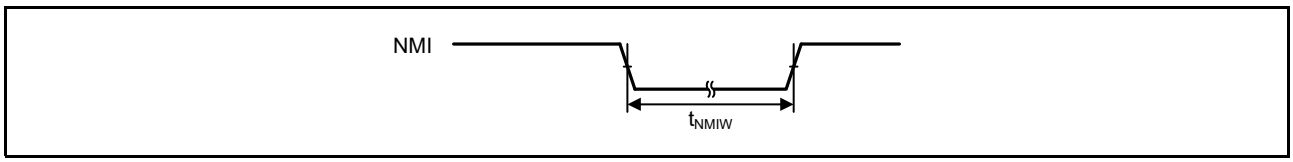

Figure 2.18 NMI interrupt input timing

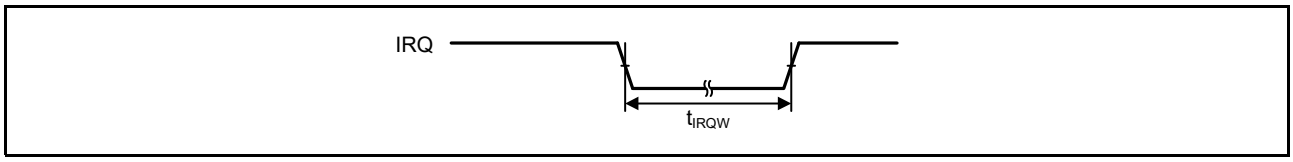

Figure 2.19 IRQ interrupt input timing

2.3.6 Bus Timing

Table 2.18 Bus timing

Conditions:
BCLK = 8 to 120 MHz, EBCLK = 8 to 60 MHz.
VCC = AVCC0 = VCC_USB = VBATT = 2.7 to 3.6 V, VREFH/VREFH0 = 2.7 V to AVCC0.
Output load conditions: VOH = VCC × 0.5, VOL = VCC × 0.5, C = 30 pF.
EBCLK: High drive output is selected in the Port Drive Capability bit in the PmnPFS register.
Others: Middle drive output is selected in the Port Drive Capability bit in the PmnPFS register.

Parameter	Symbol	Min	Max	Unit	Test conditions
Address delay	t_{AD}	-	12.5	ns	Figure 2.20 to Figure 2.25
CS delay	t_{CSD}	-	12.5	ns	
ALE delay time	t_{ALED}	-	12.5	ns	
RD delay	t_{RSD}	-	12.5	ns	
Read data setup time	t_{RDS}	12.5	-	ns	
Read data hold time	t_{RDH}	0	-	ns	
WR0 delay	t_{WRD}	-	12.5	ns	
Write data delay	t_{WDD}	-	12.5	ns	
Write data hold time	t_{WDH}	0	-	ns	
WAIT setup time	t_{WTS}	12.5	-	ns	Figure 2.26
WAIT hold time	t_{WTH}	0	-	ns	

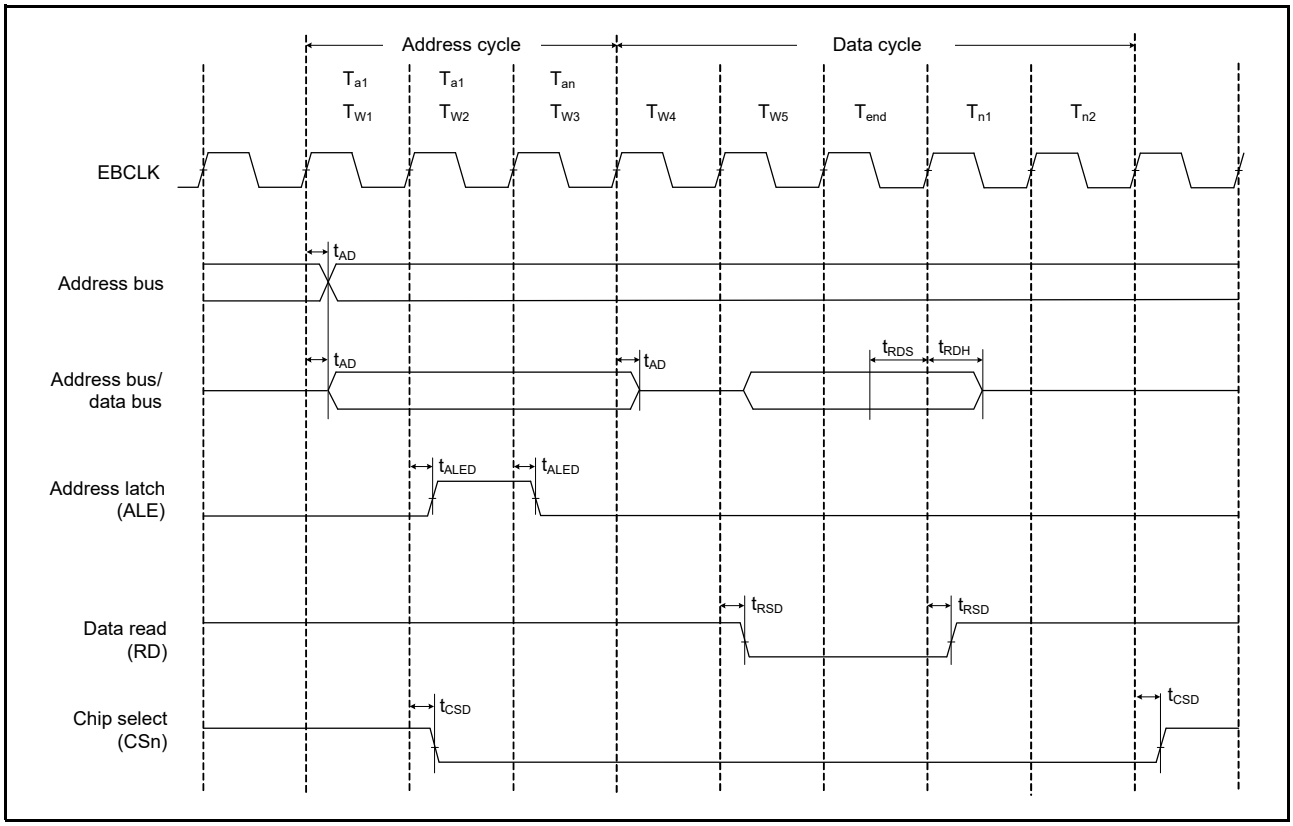

Figure 2.20 Address/data multiplexed bus read access timing

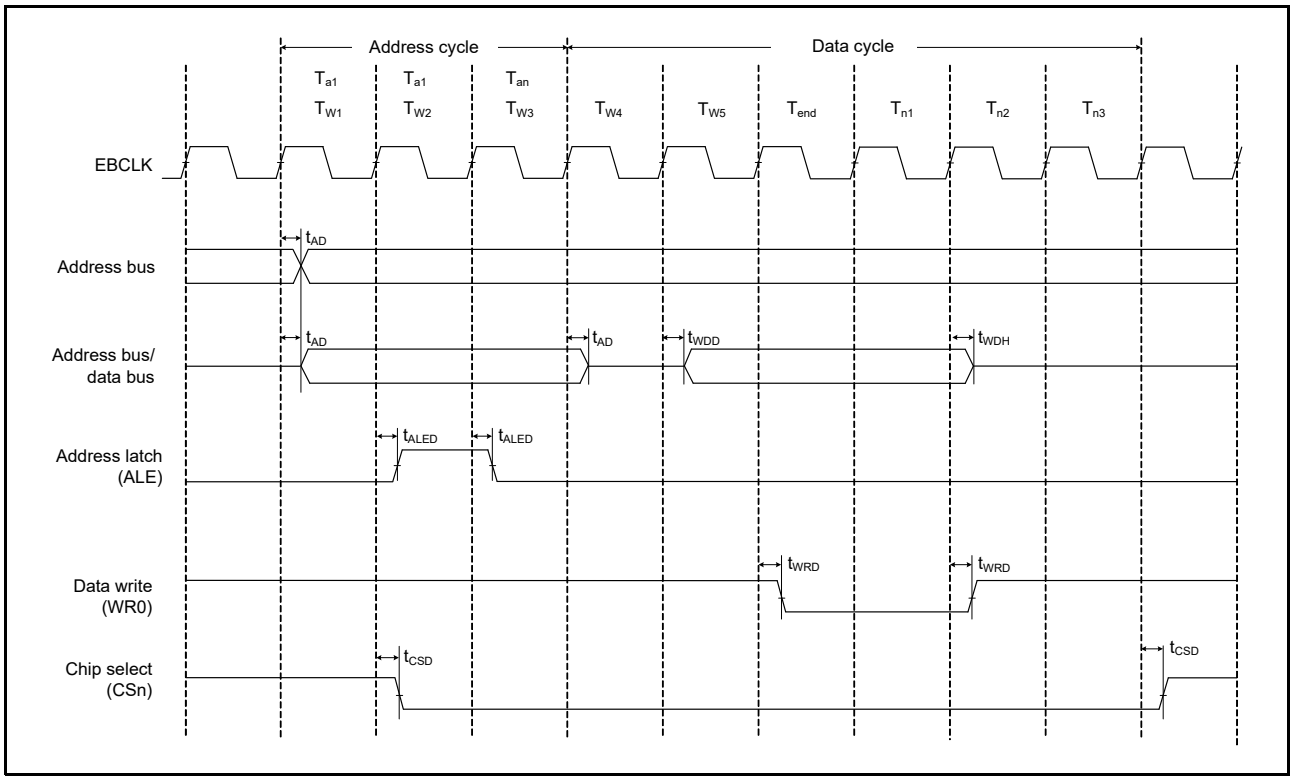

Figure 2.21 Address/data multiplexed bus write access timing

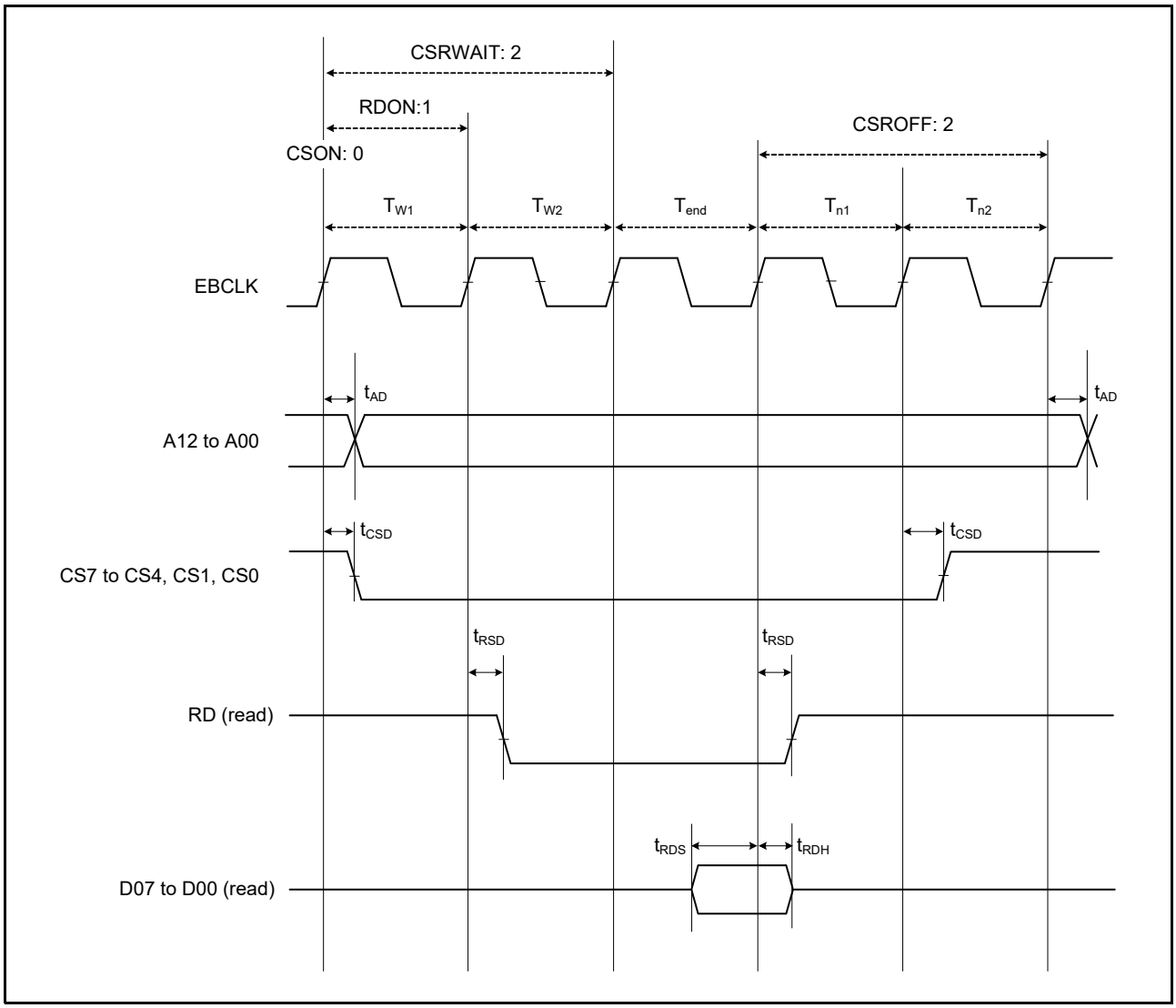

Figure 2.22 External bus timing for normal read cycle with bus clock synchronized

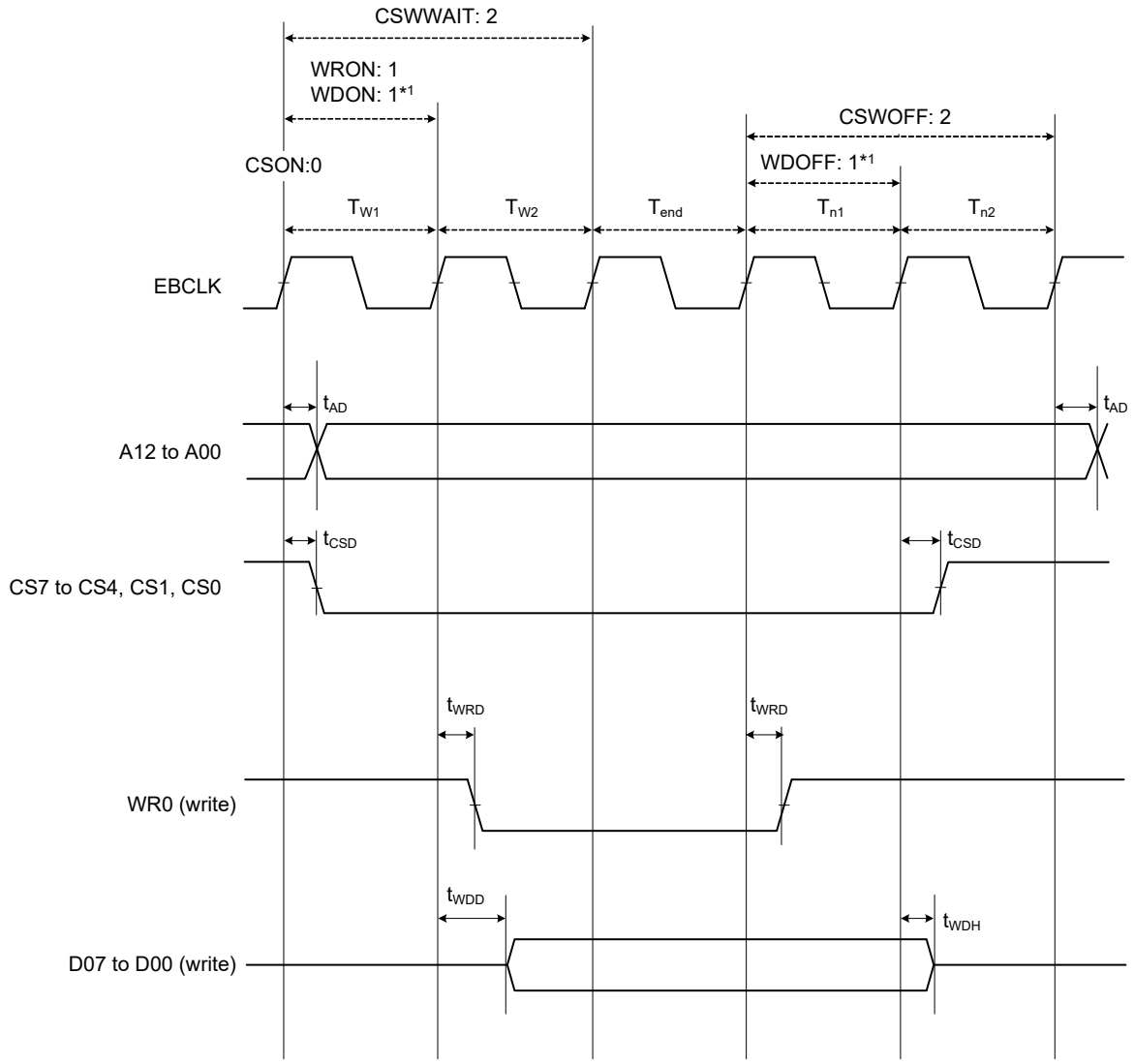

Note 1. Always specify WDON and WDOFF as at least one EBCLK cycle.

Figure 2.23 External bus timing for normal write cycle with bus clock synchronized

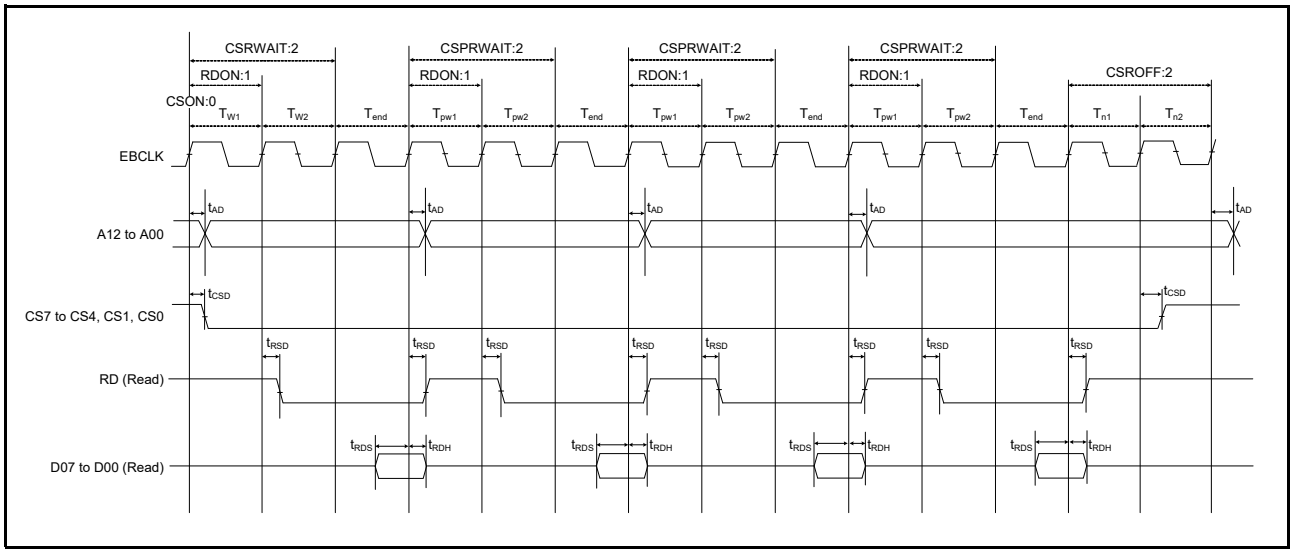

Figure 2.24 External bus timing for page read cycle with bus clock synchronized

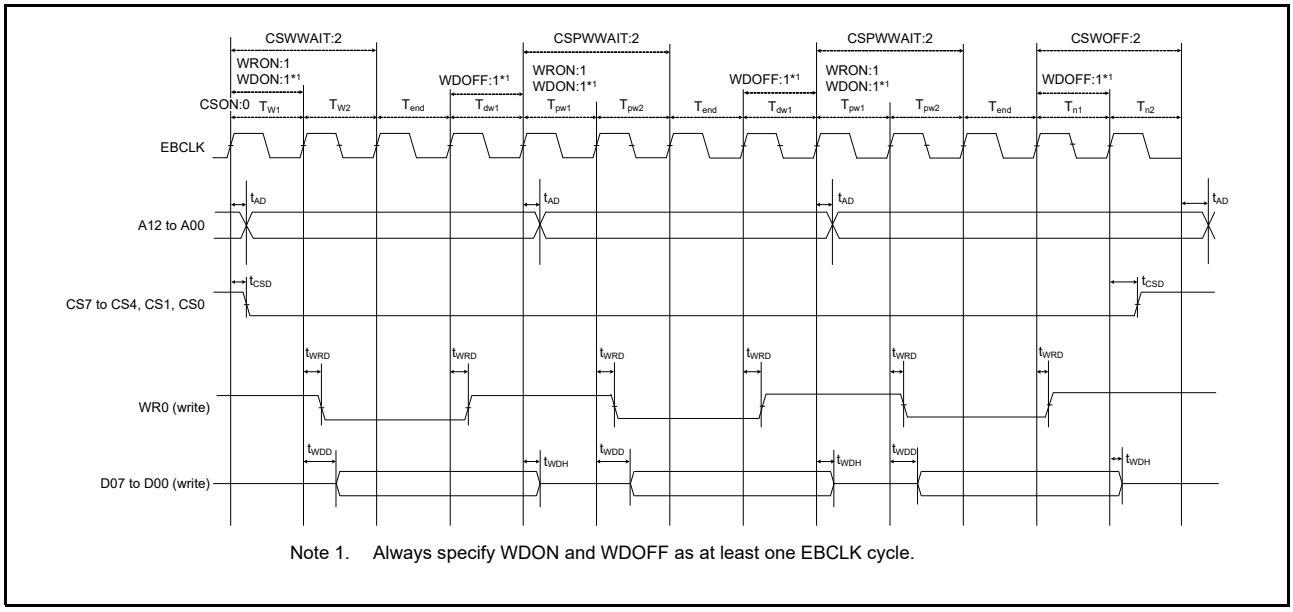

Figure 2.25 External bus timing for page write cycle with bus clock synchronized

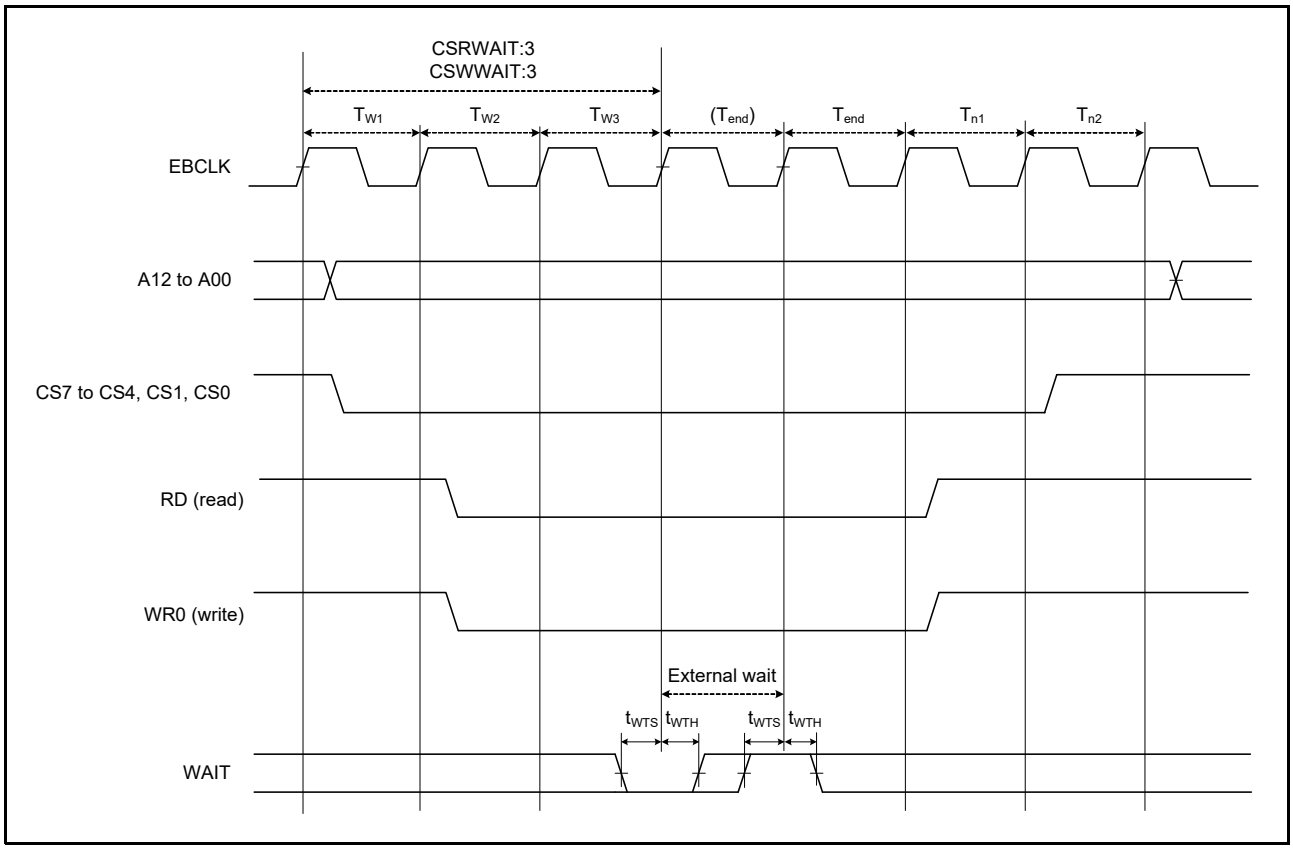

Figure 2.26 External bus timing for external wait control

2.3.7 I/O Ports, POEG, GPT32, AGT, KINT, and ADC12 Trigger Timing

Table 2.19 I/O ports, POEG, GPT32, AGT, KINT, and ADC12 trigger timing (1 of 2)

GPT32 conditions: High drive output is selected in the Port Drive Capability bit in the PmnPFS register.
AGT conditions: Middle drive output is selected in the Port Drive Capability bit in the PmnPFS register.

Parameter			Symbol	Min	Max	Unit	Test conditions
I/O ports	Input data pulse width		t_{PRW}	1.5	-	t_{Pcyc}	Figure 2.27
POEG	POEG input trigger pulse width		t_{POEW}	3	-	t_{Pcyc}	Figure 2.28
GPT32	Input capture pulse width	Single edge	t_{GTICW}	1.5	-	t_{PDcyc}	Figure 2.29
		Dual edge		2.5	-		
	GTIOCxY output skew (x = 0 to 7, Y= A or B)	Middle drive buffer	t_{GTISK}*1	-	4	ns	Figure 2.30
		High drive buffer		-	4		
	GTIOCxY output skew (x = 8 to 12, Y = A or B)	Middle drive buffer		-	4		
		High drive buffer		-	4		
	GTIOCxY output skew (x = 0 to 12, Y = A or B)	Middle drive buffer		-	6		
		High drive buffer		-	6		
	OPS output skew GTOUUP, GTOULO, GTOVUP, GTOVLO, GTOWUP, GTOWLO		t_{GTOSK}	-	5	ns	Figure 2.31
GPT (PWM Delay Generation Circuit)	GTIOCxY_Z output skew (x = 0 to 3, Y = A or B, Z = A)		t_{HRSK}*2	-	2.0	ns	Figure 2.32

Table 2.19 I/O ports, POEG, GPT32, AGT, KINT, and ADC12 trigger timing (2 of 2)
GPT32 conditions: High drive output is selected in the Port Drive Capability bit in the PmnPFS register.
AGT conditions: Middle drive output is selected in the Port Drive Capability bit in the PmnPFS register.

Parameter		Symbol	Min	Max	Unit	Test conditions
AGT	AGTIO, AGTEE input cycle	t_{ACYC}*3	100	-	ns	Figure 2.33
	AGTIO, AGTEE input high width, low width	t_{ACKWH}, t_{ACKWL}	40	-	ns	
	AGTIO, AGTO, AGTOA, AGTOB output cycle	t_{ACYC2}	62.5	-	ns	
ADC12	ADC12 trigger input pulse width	t_{TRGW}	1.5	-	t_{Pcyc}	Figure 2.34
KINT	KRn(n = 00 to 07) pulse width	t_{KR}	250	-	ns	Figure 2.35

Note: t_{Pcyc}: PCLKB cycle, t_{PDcyc}: PCLKD cycle.
Note 1. This skew applies when the same driver I/O is used. If the I/O of the middle and high drivers is mixed, operation is not guaranteed.
Note 2. The load is 30 pF.
Note 3. Constraints on input cycle:
When not switching the source clock: $t_{Pcyc} \times 2 < t_{ACYC}$ should be satisfied.
When switching the source clock: $t_{Pcyc} \times 6 < t_{ACYC}$ should be satisfied.

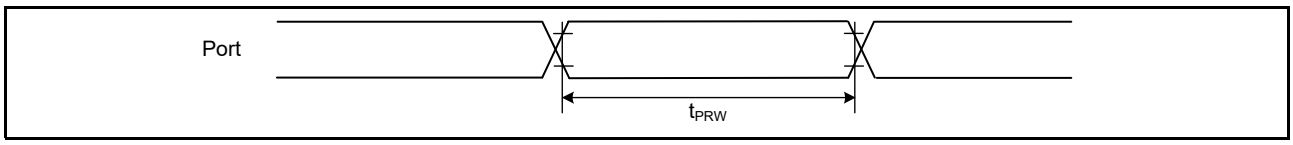

Figure 2.27 I/O ports input timing

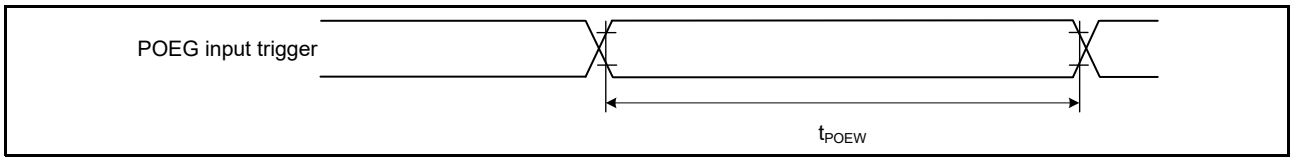

Figure 2.28 POEG input trigger timing

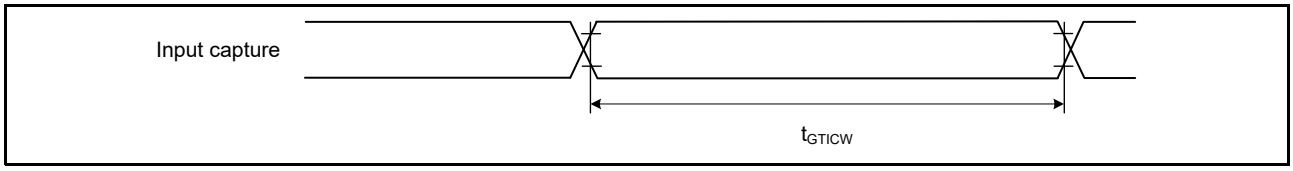

Figure 2.29 GPT32 input capture timing

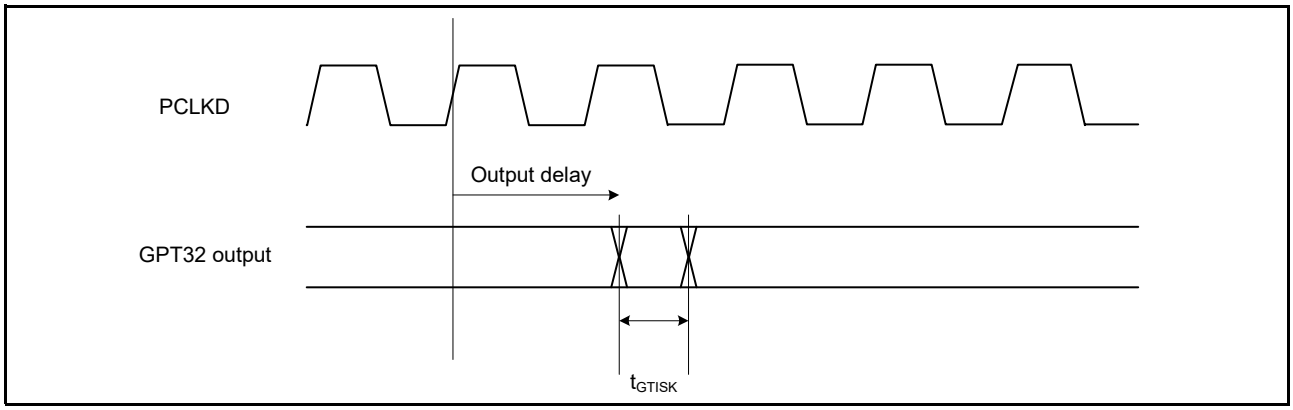

Figure 2.30 GPT32 output delay skew

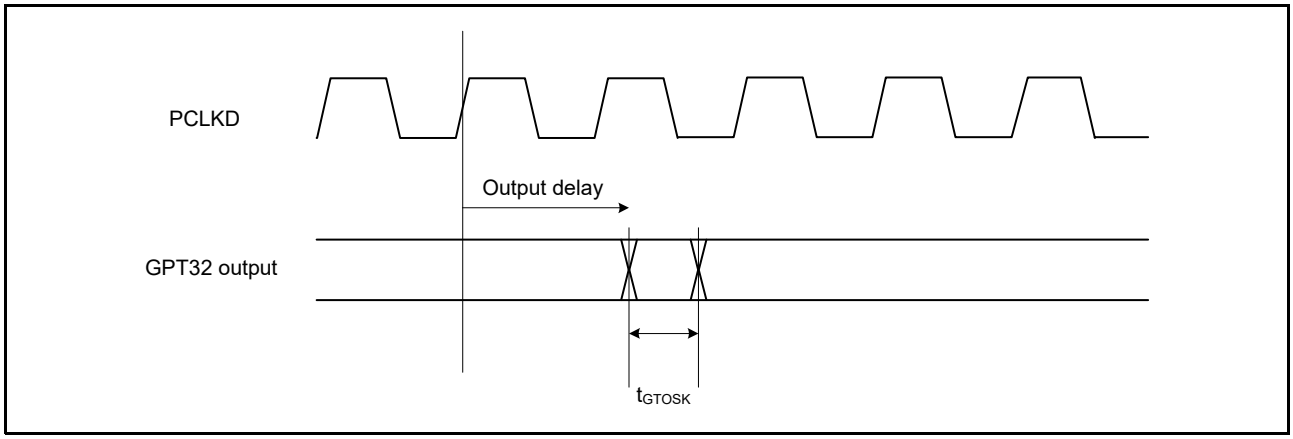

Figure 2.31 GPT32 output delay skew for OPS

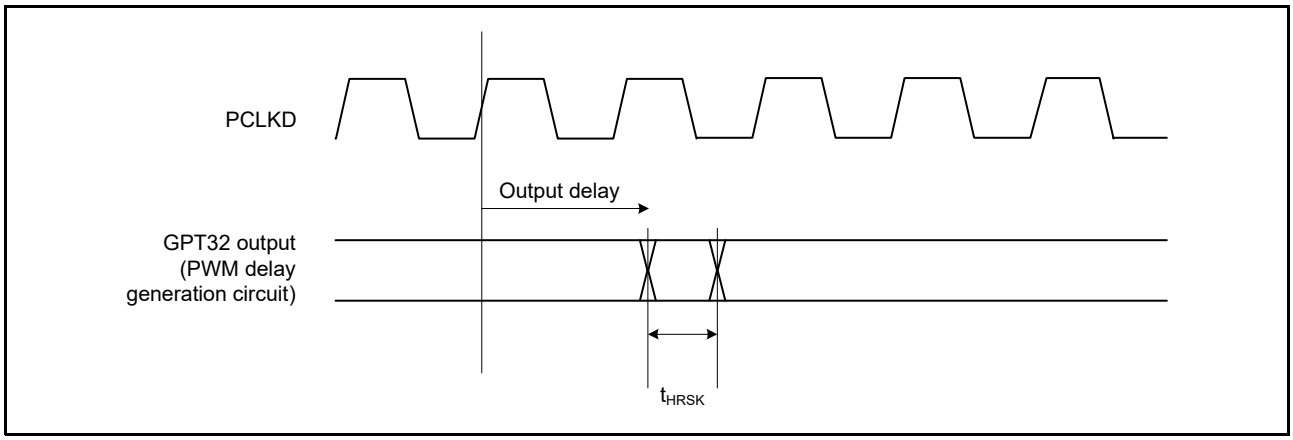

Figure 2.32 GPT32 (PWM delay generation circuit) output delay skew

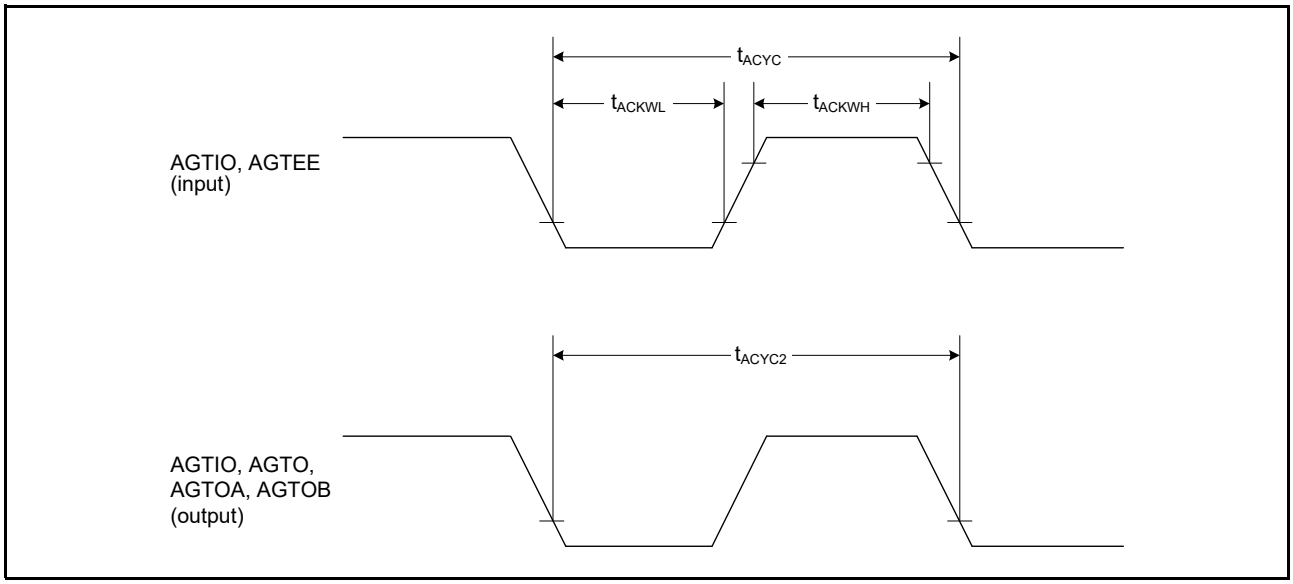

Figure 2.33 AGT input/output timing

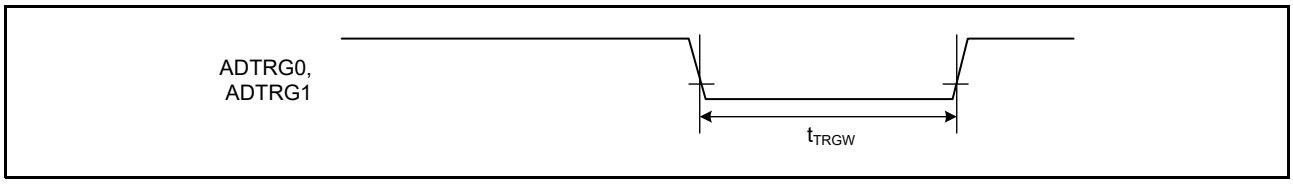

Figure 2.34 ADC12 trigger input timing

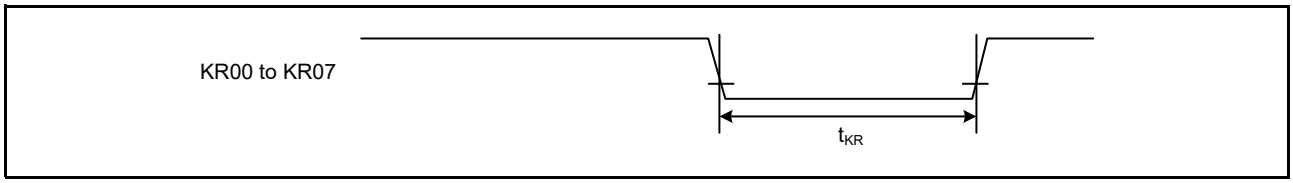

Figure 2.35 Key interrupt input timing

2.3.8 PWM Delay Generation Circuit Timing

Table 2.20 PWM Delay Generation Circuit timing

Parameter	Min	Typ	Max	Unit	Test conditions
Operation frequency	80	-	120	MHz	-
Resolution	-	260	-	ps	PCLKD = 120 MHz
DNL*1	-	±2.0	-	LSB	-

Note 1. This value normalizes the differences between lines in 1-LSB resolution.

2.3.9 CAC Timing

Table 2.21 CAC timing

Parameter			Symbol	Min	Typ	Max	Unit	Test conditions
CAC	CACREF input pulse width	$t_{PBcyc} \leq t_{cac}$*2	t_{CACREF}	$4.5 \times t_{cac} + 3 \times t_{PBcyc}$	-	-	ns	-
		$t_{PBcyc} > t_{cac}$*2		$5 \times t_{cac} + 6.5 \times t_{PBcyc}$	-	-	ns	

Note 1. t_{PBcyc}: PCLKB cycle.
Note 2. t_{cac}: CAC count clock source cycle.

2.3.10 SCI Timing

Table 2.22 SCI timing (1)
Conditions: High drive output is selected in the Port Drive Capability bit in the PmnPFS register for the following pins: SCK0 to SCK4, SCK8, SCK9.
For other pins, middle drive output is selected in the Port Drive Capability bit in the PmnPFS register.

Parameter			Symbol	Min	Max	Unit*1	Test conditions
SCI	Input clock cycle	Asynchronous	t_{Scyc}	4	-	t_{Pcyc}	Figure 2.36
		Clock synchronous		6	-		
	Input clock pulse width		t_{SCKW}	0.4	0.6	t_{Scyc}	
	Input clock rise time		t_{SCKr}	-	5	ns	
	Input clock fall time		t_{SCKf}	-	5	ns	
	Output clock cycle	Asynchronous	t_{Scyc}	6	-	t_{Pcyc}	
		Clock synchronous		4	-		
	Output clock pulse width		t_{SCKW}	0.4	0.6	t_{Scyc}	
	Output clock rise time		t_{SCKr}	-	5	ns	
	Output clock fall time		t_{SCKf}	-	5	ns	
	Transmit data delay	Clock synchronous	t_{TXD}	-	25	ns	Figure 2.37
	Receive data setup time	Clock synchronous	t_{RXS}	15	-	ns	
	Receive data hold time	Clock synchronous	t_{RXH}	5	-	ns	

Note 1. t_{Pcyc}: PCLKA cycle.

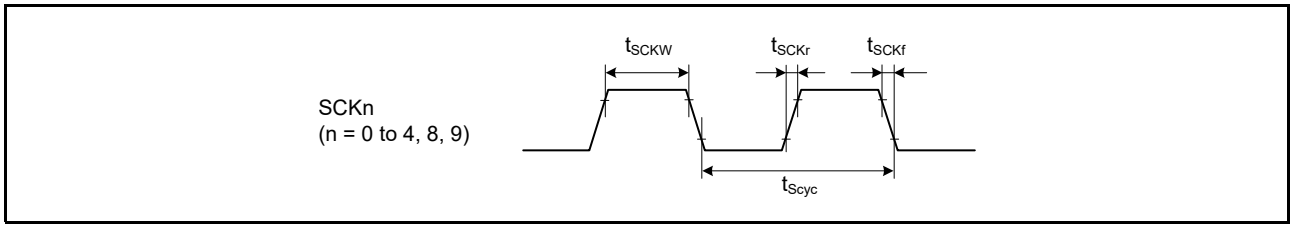

Figure 2.36 SCK clock input/output timing

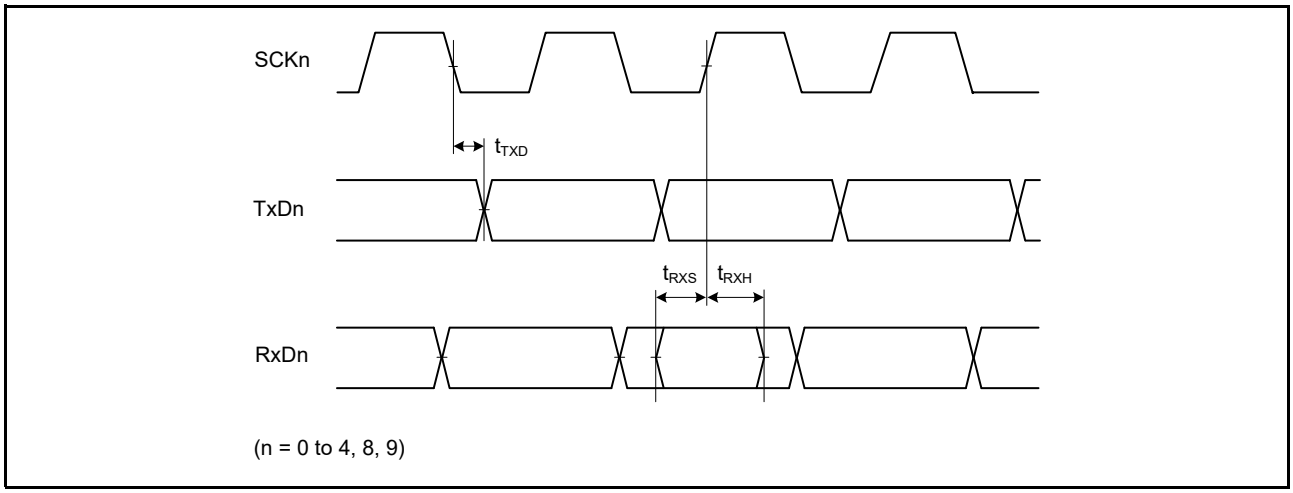

Figure 2.37 SCI input/output timing in clock synchronous mode

Table 2.23 SCI timing (2)

Conditions: High drive output is selected in the Port Drive Capability bit in the PmnPFS register for the following pins: SCK0 to SCK4, SCK8, SCK9.
For other pins, middle drive output is selected in the Port Drive Capability bit in the PmnPFS register.

Parameter		Symbol	Min	Max	Unit	Test conditions
Simple SPI	SCK clock cycle output (master)	t_{SPcyc}	4 (PCLKA ≤ 60 MHz) 8 (PCLKA > 60 MHz)	65536	t_{Pcyc}	Figure 2.38
	SCK clock cycle input (slave)	-	6 (PCLKA ≤ 60 MHz) 12 (PCLKA > 60 MHz)	65536		
	SCK clock high pulse width	t_{SPCKWH}	0.4	0.6	t_{SPcyc}	
	SCK clock low pulse width	t_{SPCKWL}	0.4	0.6	t_{SPcyc}	
	SCK clock rise and fall time	t_{SPCKr}, t_{SPCKf}	-	20	ns	
	Data input setup time	t_{SU}	33.3	-	ns	Figure 2.39 to Figure 2.42
	Data input hold time	t_{H}	33.3	-	ns	
	SS input setup time	t_{LEAD}	1	-	t_{SPcyc}	
	SS input hold time	t_{LAG}	1	-	t_{SPcyc}	
	Data output delay	t_{OD}	-	33.3	ns	
	Data output hold time	t_{OH}	-10	-	ns	
	Data rise and fall time	t_{Dr}, t_{Df}	-	16.6	ns	
	SS input rise and fall time	t_{SSLr}, t_{SSLf}	-	16.6	ns	
	Slave access time	t_{SA}	-	4 (PCLKA ≤ 60 MHz) 8 (PCLKA > 60 MHz)	t_{Pcyc}	Figure 2.42
	Slave output release time	t_{REL}	-	5 (PCLKA ≤ 60 MHz) 10 (PCLKA > 60 MHz)	t_{Pcyc}	

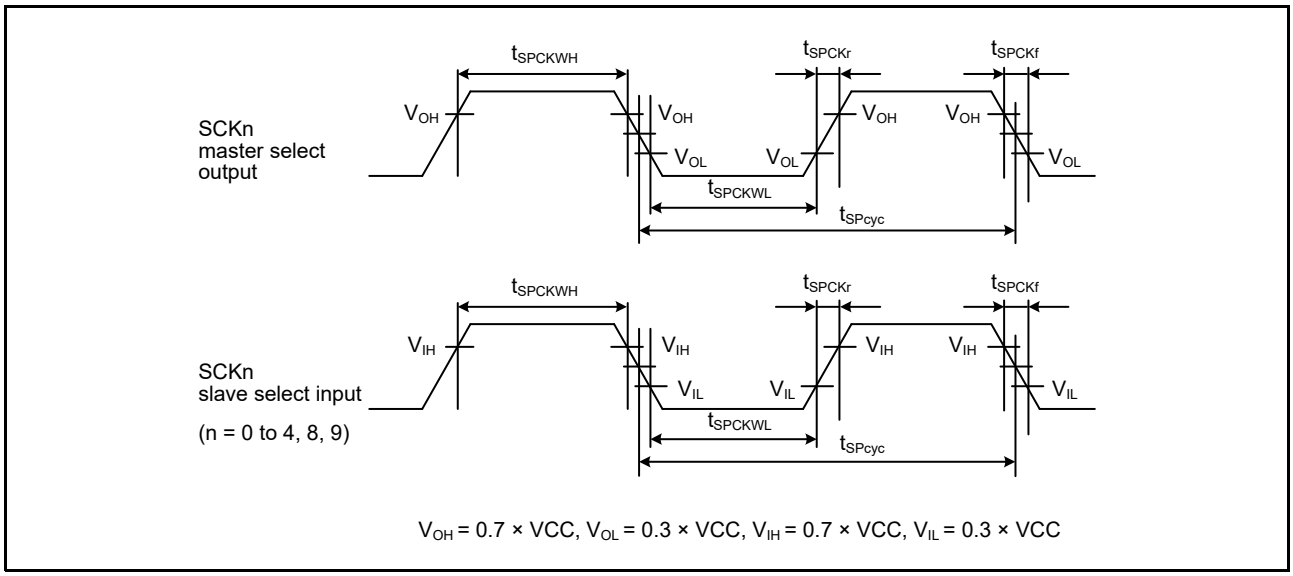

Figure 2.38 SCI simple SPI mode clock timing

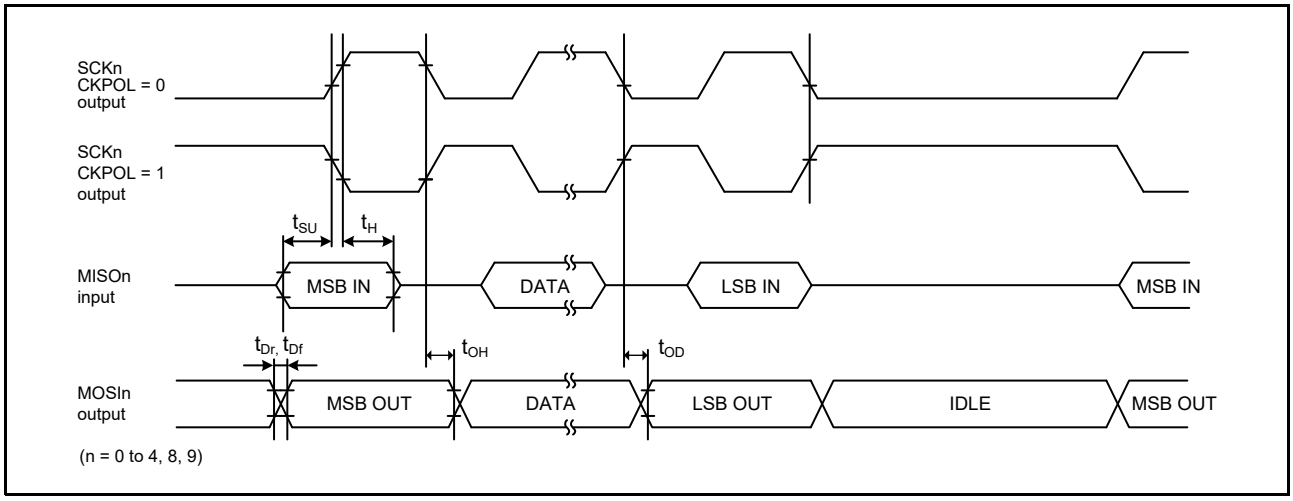

Figure 2.39 SCI simple SPI mode timing for master when CKPH = 1

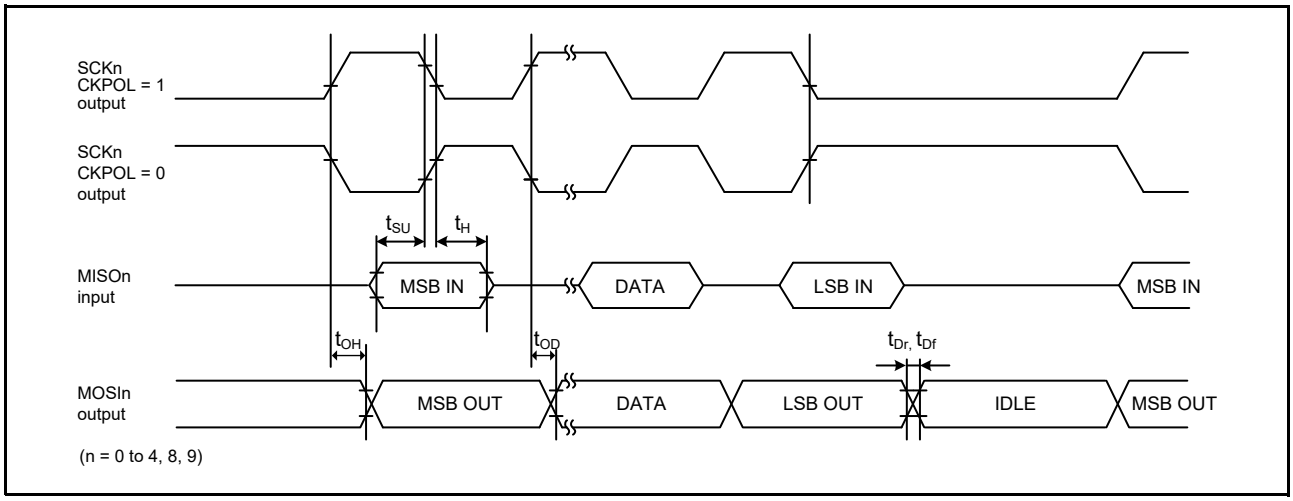

Figure 2.40 SCI simple SPI mode timing for master when CKPH = 0

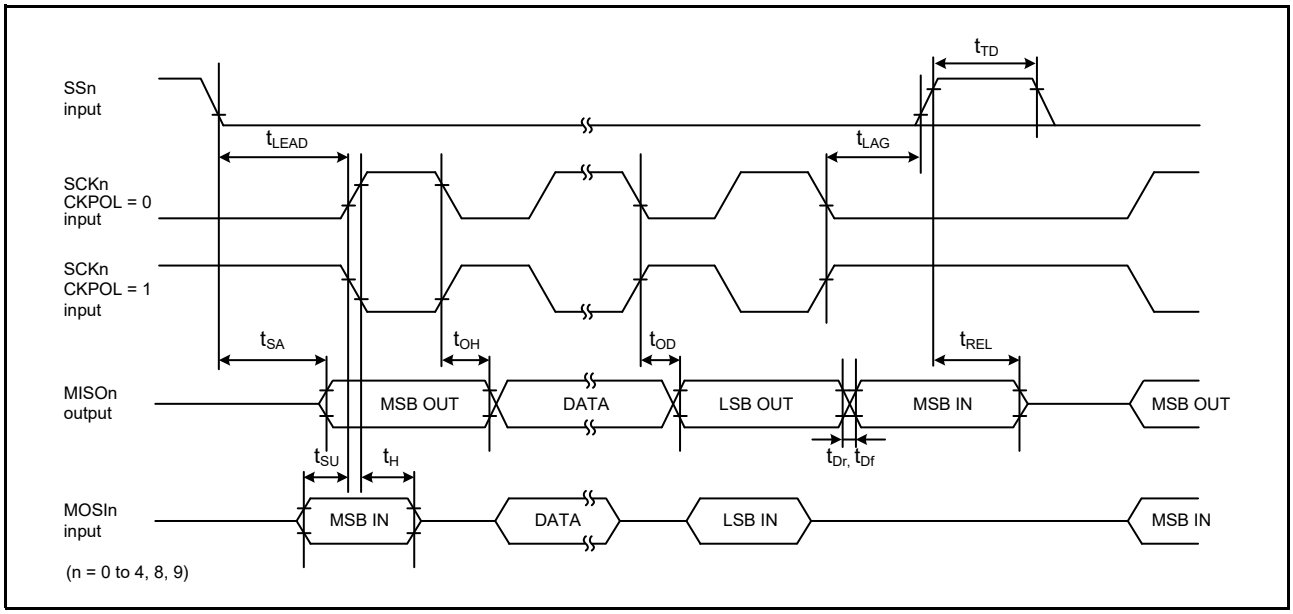

Figure 2.41 SCI simple SPI mode timing for slave when CKPH = 1

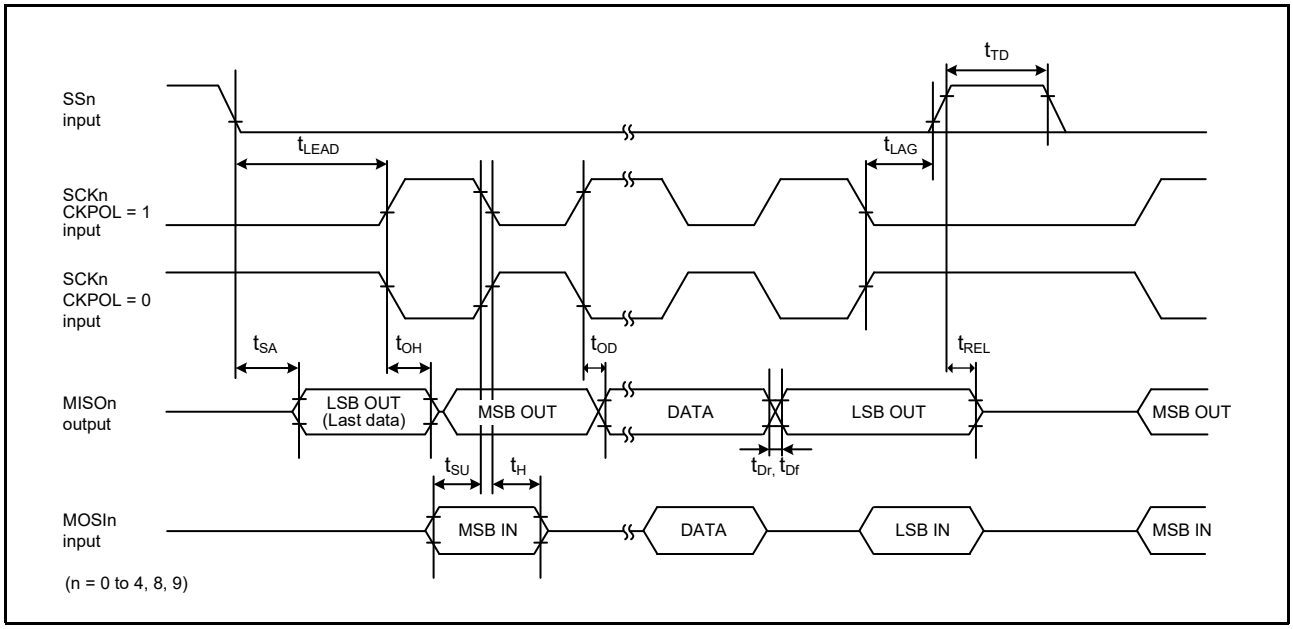

Figure 2.42 SCI simple SPI mode timing for slave when CKPH = 0

Table 2.24 SCI timing (3) (1 of 2)

Conditions: Middle drive output is selected in the Port Drive Capability bit in the PmnPFS register.

Parameter		Symbol	Min	Max	Unit	Test conditions
Simple IIC (Standard mode)	SDA input rise time	t_{Sr}	-	1000	ns	Figure 2.43
	SDA input fall time	t_{Sf}	-	300	ns	
	SDA input spike pulse removal time	t_{SP}	0	4 × t_{IICcyc}	ns	
	Data input setup time	t_{SDAS}	250	-	ns	
	Data input hold time	t_{SDAH}	0	-	ns	
	SCL, SDA capacitive load	C_b*1	-	400	pF	

Table 2.24 SCI timing (3) (2 of 2)
Conditions: Middle drive output is selected in the Port Drive Capability bit in the PmnPFS register.

Parameter		Symbol	Min	Max	Unit	Test conditions
Simple IIC (Fast mode)	SDA input rise time	t_{Sr}	-	300	ns	Figure 2.43
	SDA input fall time	t_{Sf}	-	300	ns	
	SDA input spike pulse removal time	t_{SP}	0	4 × t_{IICcyc}	ns	
	Data input setup time	t_{SDAS}	100	-	ns	
	Data input hold time	t_{SDAH}	0	-	ns	
	SCL, SDA capacitive load	C_b*1	-	400	pF	

Note: t_{IICcyc}: IIC internal reference clock (IICφ) cycle.
Note 1. Cb indicates the total capacity of the bus line.

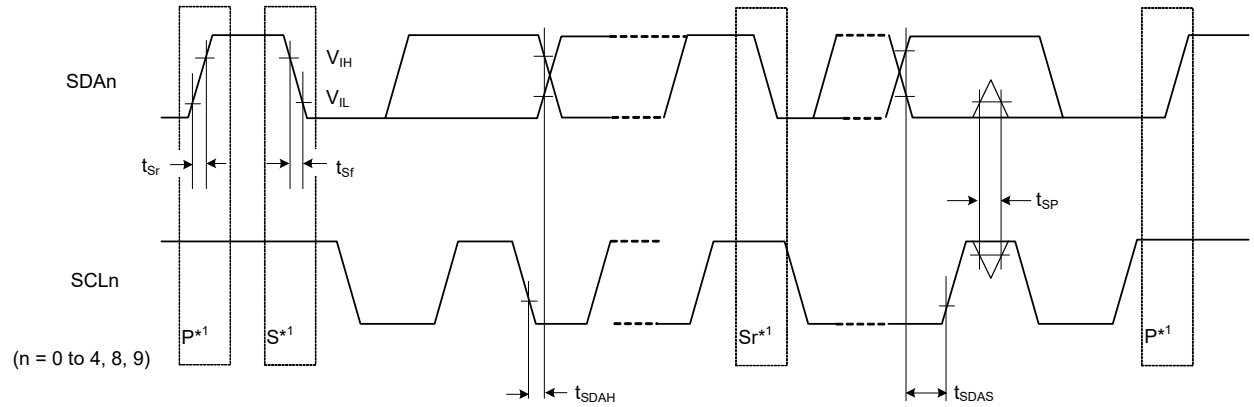

Note 1. S, P, and Sr indicate the following:
S: Start condition
P: Stop condition
Sr: Restart condition

Test conditions:
V_{IH} = VCC × 0.7, V_{IL} = VCC × 0.3
V_{OL} = 0.6 V, I_{OL} = 6 mA

Figure 2.43 SCI simple IIC mode timing

2.3.11 SPI Timing

Table 2.25 SPI timing

Conditions:
For RSPCKA and RSPCKB pins, high drive output is selected with the Port Drive Capability bit in the PmnPFS register.
For other pins, middle drive output is selected in the Port Drive Capability bit in the PmnPFS register.

Parameter			Symbol	Min	Max	Unit*1	Test conditions*2
SPI	RSPCK clock cycle	Master	t_{SPcyc}	2 (PCLKA ≤ 60 MHz) 4 (PCLKA > 60 MHz)	4096	t_{Pcyc}	Figure 2.44 C = 30 pF
		Slave		4	4096		
	RSPCK clock high pulse width	Master	t_{SPCKWH}	(t_{SPcyc} - t_{SPCKr} - t_{SPCKf}) / 2 - 3	-	ns	
		Slave		2 × t_{Pcyc}	-		
	RSPCK clock low pulse width	Master	t_{SPCKWL}	(t_{SPcyc} - t_{SPCKr} - t_{SPCKf}) / 2 - 3	-	ns	
		Slave		2 × t_{Pcyc}	-		
	RSPCK clock rise and fall time	Master	t_{SPCKr}, t_{SPCKf}	-	5	ns	
		Slave		-	1	μs	
	Data input setup time	Master	t_{SU}	4	-	ns	Figure 2.45 to Figure 2.50 C = 30 pF
		Slave		5	-		
	Data input hold time	Master (PCLKA division ratio set to 1/2)	t_{HF}	0	-	ns	
		Master (PCLKA division ratio set to a value other than 1/2)	t_H	t_{Pcyc}	-		
		Slave	t_H	20	-		
	SSL setup time	Master	t_{LEAD}	N × t_{SPcyc} - 10*3	N × t_{SPcyc} + 100*3	ns	
		Slave		6 x t_{Pcyc}	-	ns	
	SSL hold time	Master	t_{LAG}	N × t_{SPcyc} - 10 *4	N × t_{SPcyc} + 100*4	ns	
		Slave		6 x t_{Pcyc}	-	ns	
	Data output delay	Master	t_{OD}	-	6.3	ns	
		Slave		-	20		
	Data output hold time	Master	t_{OH}	0	-	ns	
		Slave		0	-		
	Successive transmission delay	Master	t_{TD}	t_{SPcyc} + 2 × t_{Pcyc}	8 × t_{SPcyc} + 2 × t_{Pcyc}	ns	
		Slave		6 × t_{Pcyc}			
	MOSI and MISO rise and fall time	Output	t_{Dr}, t_{Df}	-	5	ns	
		Input		-	1	μs	
	SSL rise and fall time	Output	t_{SSLr}, t_{SSLf}	-	5	ns	
		Input		-	1	μs	
	Slave access time		t_{SA}	-	2 x t_{Pcyc} + 28	ns	Figure 2.49 and Figure 2.50 C = 30pF
	Slave output release time		t_{REL}	-	2 x t_{Pcyc} + 28		

Note 1. t_{Pcyc}: PCLKA cycle.

Note 2. Must use pins that have a letter appended to their name, for instance "_A", "_B", to indicate group membership. For the SPI interface, the AC portion of the electrical characteristics is measured for each group.
Note 3. N is set to an integer from 1 to 8 by the SPCKD register.
Note 4. N is set to an integer from 1 to 8 by the SSLND register.

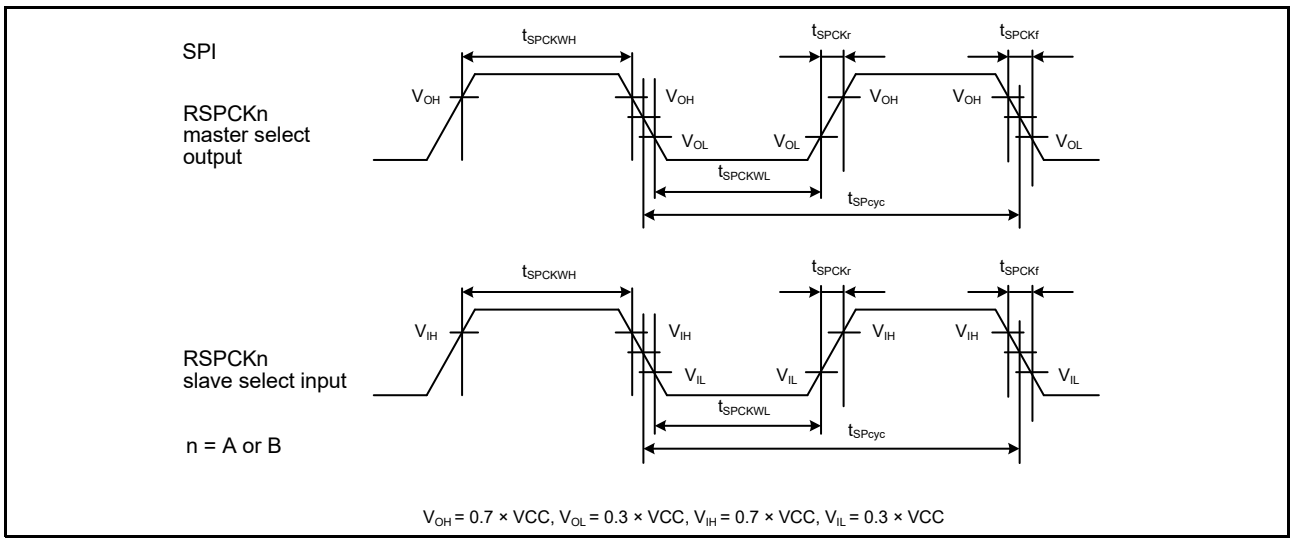

Figure 2.44 SPI clock timing

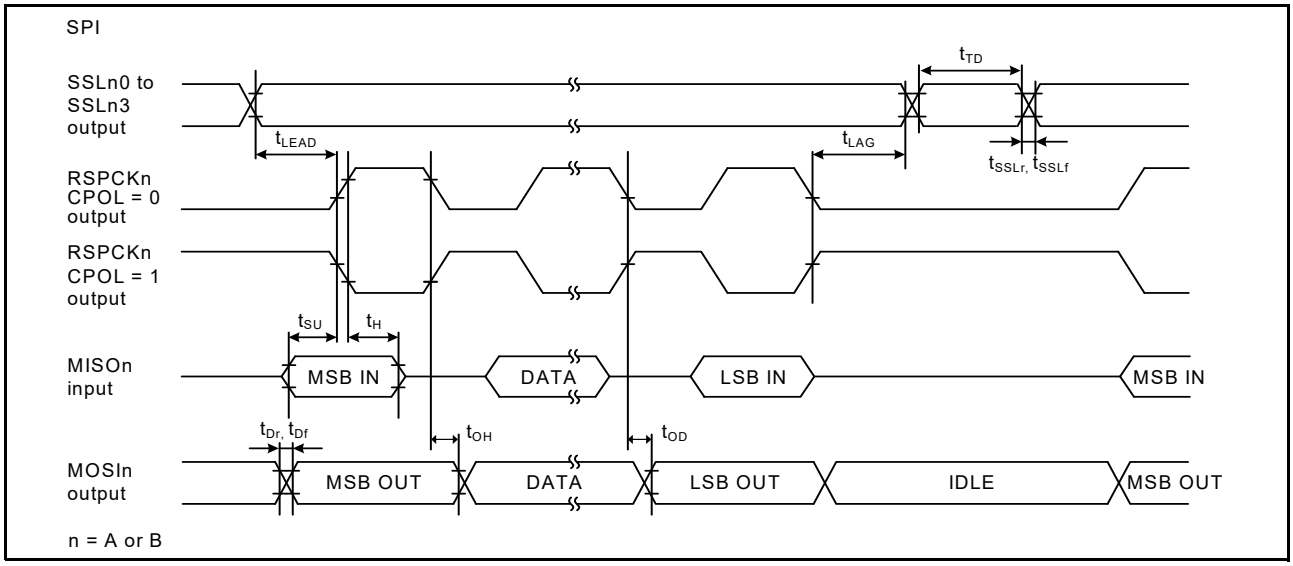

Figure 2.45 SPI timing for master when CPHA = 0

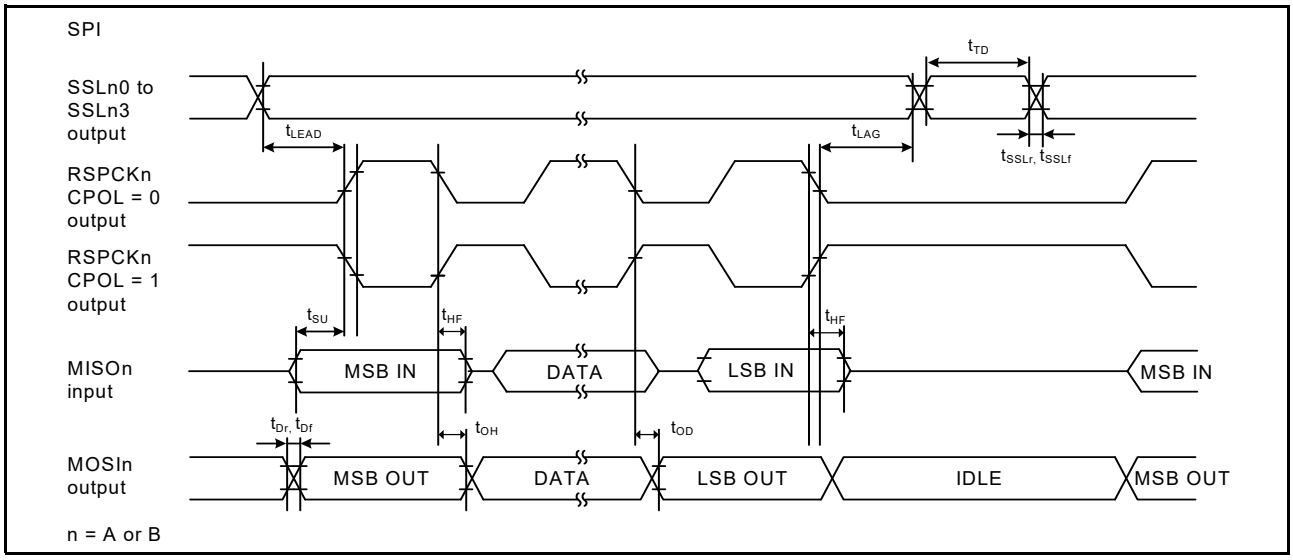

Figure 2.46 SPI timing for master when CPHA = 0 and the bit rate is set to PCLKA/2

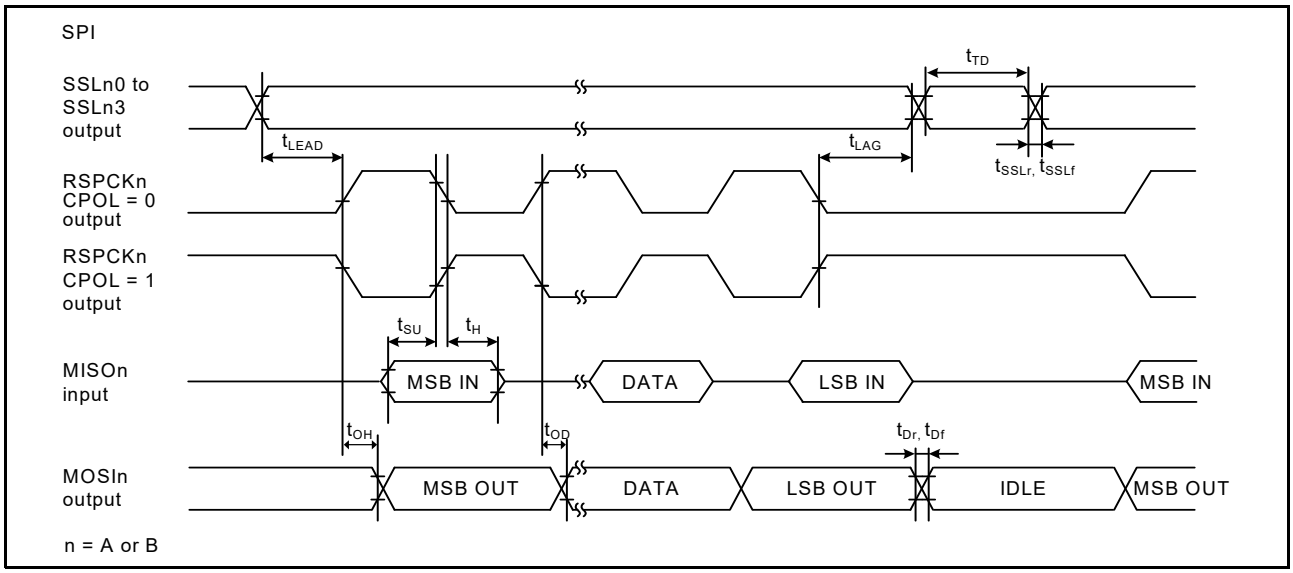

Figure 2.47 SPI timing for master when CPHA = 1

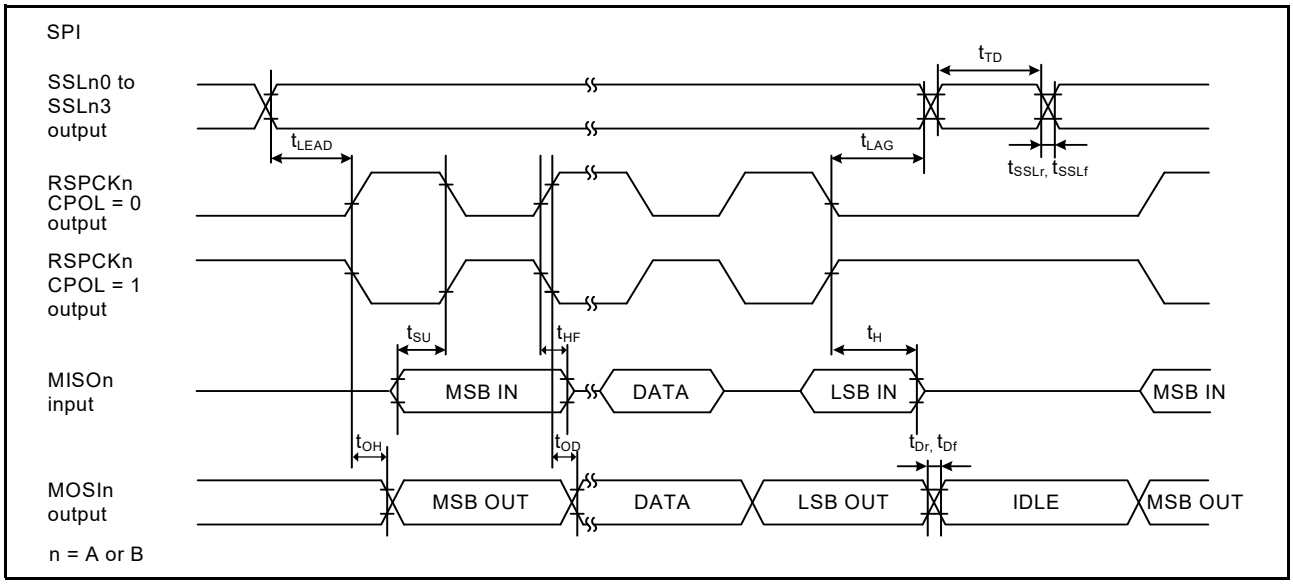

Figure 2.48 RSPI timing for master when CPHA = 1 and the bit rate is set to PCLKA/2

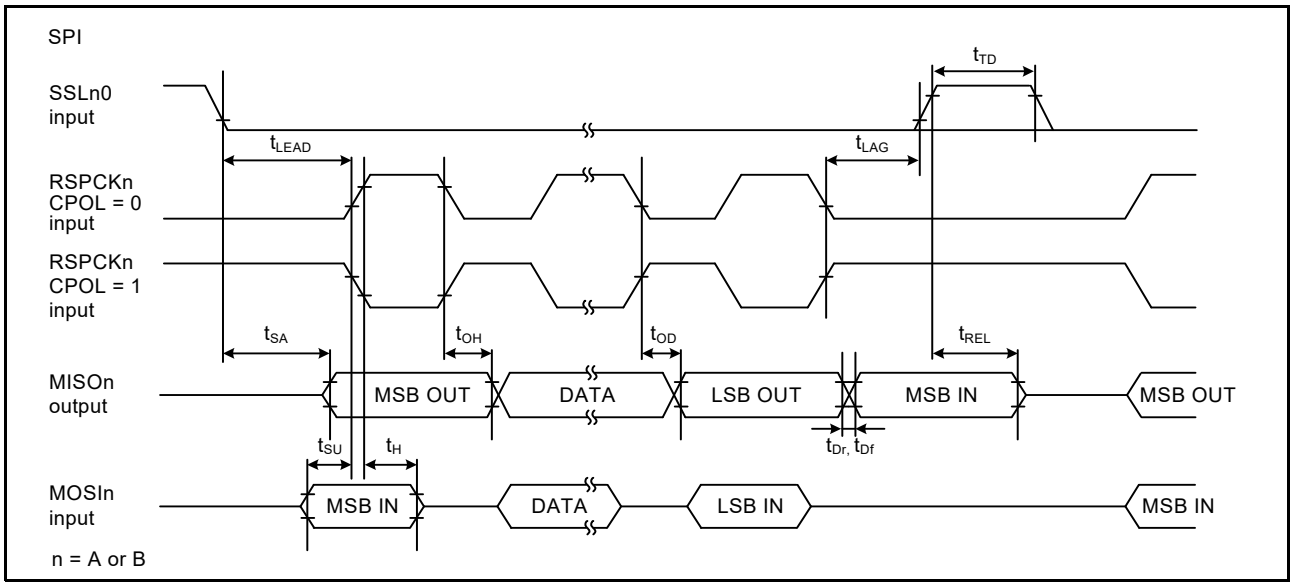

Figure 2.49 SPI timing for slave when CPHA = 0

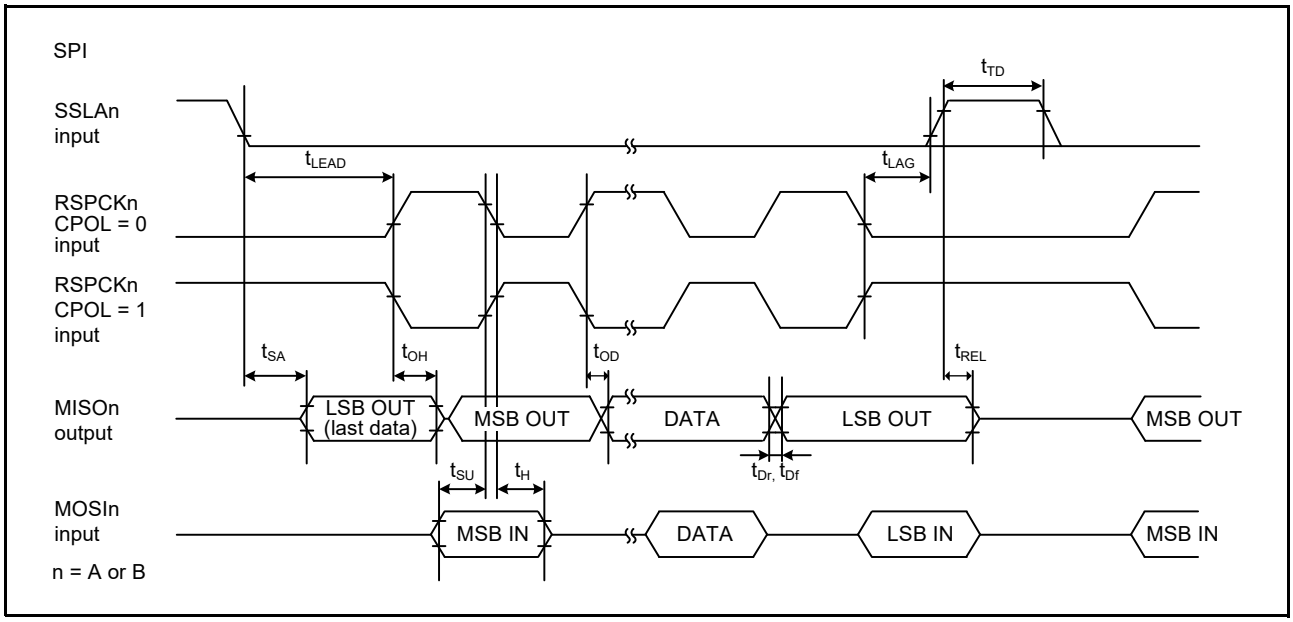

Figure 2.50 SPI timing for slave when CPHA = 1

2.3.12 QSPI Timing

Table 2.26 QSPI timing

Conditions: High drive output is selected in the Port Drive Capability bit in the PmnPFS register.

Parameter		Symbol	Min	Max	Unit*1	Test conditions
QSPI	QSPCK clock cycle	t_{QScyc}	2	48	t_{Pcyc}	Figure 2.51
	QSPCK clock high pulse width	t_{QSWH}	t_{QScyc} × 0.4	-	ns	
	QSPCK clock low pulse width	t_{QSWL}	t_{QScyc} × 0.4	-	ns	
	Data input setup time	t_{Su}	8	-	ns	Figure 2.52
	Data input hold time	t_{IH}	0	-	ns	
	QSSL setup time	t_{LEAD}	(N+0.5) x t_{Qscyc} - 5 *2	(N+0.5) x t_{Qscyc} +100 *2	ns	
	QSSL hold time	t_{LAG}	(N+0.5) x t_{Qscyc} - 5 *3	(N+0.5) x t_{Qscyc} +100 *3	ns	
	Data output delay	t_{OD}	-	4	ns	
	Data output hold time	t_{OH}	-3.3	-	ns	
	Successive transmission delay	t_{TD}	1	16	t_{QScyc}	

Note 1. t_{Pcyc}: PCLKA cycle.
Note 2. N is set to 0 or 1 in SFMSLD.
Note 3. N is set to 0 or 1 in SFMSHD.

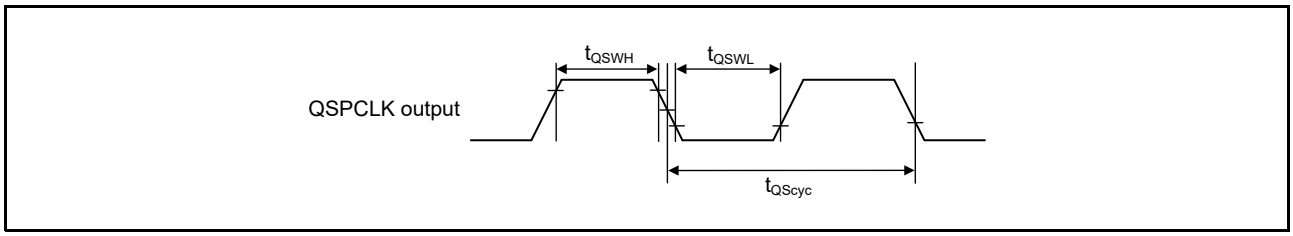

Figure 2.51 QSPI clock timing

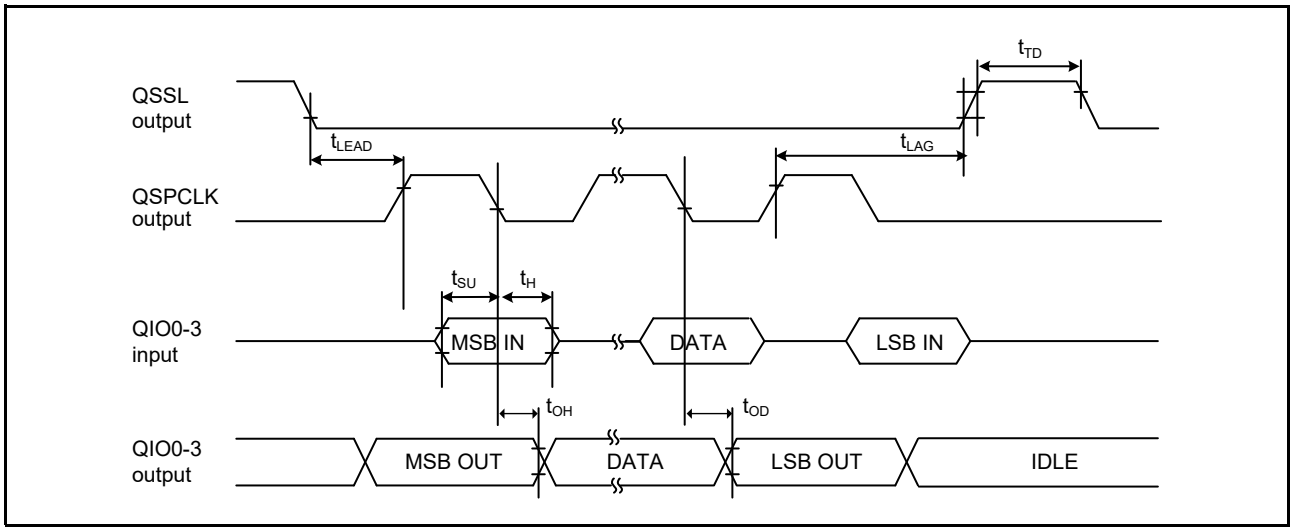

Figure 2.52 Transmit and receive timing

2.3.13 IIC Timing

Table 2.27 IIC timing (1) (1 of 2)

(1) Conditions: Middle drive output is selected in the Port Drive Capability bit in the PmnPFS register for the following pins: SDA0_B, SCL0_B, SDA1_A, SCL1_A, SDA1_B, SCL1_B.
(2) The following pins do not require setting: SCL0_A, SDA0_A.
(3) Use pins that have a letter appended to their names, for instance "_A" or "_B", to indicate group membership. For the IIC interface, the AC portion of the electrical characteristics is measured for each group.

Parameter		Symbol	Min*1	Max	Unit	Test conditions*3
IIC (Standard mode, SMBus) ICFER.FMPE = 0	SCL input cycle time	t_{SCL}	6 (12) × t_{IICcyc} + 1300	-	ns	Figure 2.53
	SCL input high pulse width	t_{SCLH}	3 (6) × t_{IICcyc} + 300	-	ns	
	SCL input low pulse width	t_{SCLL}	3 (6) × t_{IICcyc} + 300	-	ns	
	SCL, SDA input rise time	t_{Sr}	-	1000	ns	
	SCL, SDA input fall time	t_{Sf}	-	300	ns	
	SCL, SDA input spike pulse removal time	t_{SP}	0	1 (4) × t_{IICcyc}	ns	
	SDA input bus free time when wakeup function is disabled	t_{BUF}	3 (6) × t_{IICcyc} + 300	-	ns	
	SDA input bus free time when wakeup function is enabled	t_{BUF}	3 (6) × t_{IICcyc} + 4 × t_{Pcyc} + 300	-	ns	
	START condition input hold time when wakeup function is disabled	t_{STAH}	t_{IICcyc} + 300	-	ns	
	START condition input hold time when wakeup function is enabled	t_{STAH}	1 (5) × t_{IICcyc} + t_{Pcyc} + 300	-	ns	
	Repeated START condition input setup time	t_{STAS}	1000	-	ns	
	STOP condition input setup time	t_{STOS}	1000	-	ns	
	Data input setup time	t_{SDAS}	t_{IICcyc} + 50	-	ns	
	Data input hold time	t_{SDAH}	0	-	ns	
	SCL, SDA capacitive load	C_b	-	400	pF	

Table 2.27 IIC timing (1) (2 of 2)

(1) Conditions: Middle drive output is selected in the Port Drive Capability bit in the PmnPFS register for the following pins: SDA0_B, SCL0_B, SDA1_A, SCL1_A, SDA1_B, SCL1_B.
(2) The following pins do not require setting: SCL0_A, SDA0_A.
(3) Use pins that have a letter appended to their names, for instance "_A" or "_B", to indicate group membership. For the IIC interface, the AC portion of the electrical characteristics is measured for each group.

Parameter		Symbol	Min*1	Max	Unit	Test conditions*3
IIC (Fast mode)	SCL input cycle time	t_{SCL}	6 (12) × t_{IICcyc} + 600	-	ns	Figure 2.53
	SCL input high pulse width	t_{SCLH}	3 (6) × t_{IICcyc} + 300	-	ns	
	SCL input low pulse width	t_{SCLL}	3 (6) × t_{IICcyc} + 300	-	ns	
	SCL, SDA input rise time	t_{Sr}	20 × (external pullup voltage/5.5V)*2	300	ns	
	SCL, SDA input fall time	t_{Sf}	20 × (external pullup voltage/5.5V)*2	300	ns	
	SCL, SDA input spike pulse removal time	t_{SP}	0	1 (4) × t_{IICcyc}	ns	
	SDA input bus free time when wakeup function is disabled	t_{BUF}	3 (6) × t_{IICcyc} + 300	-	ns	
	SDA input bus free time when wakeup function is enabled	t_{BUF}	3 (6) × t_{IICcyc} + 4 × t_{Pcyc} + 300	-	ns	
	START condition input hold time when wakeup function is disabled	t_{STAH}	t_{IICcyc} + 300	-	ns	
	START condition input hold time when wakeup function is enabled	t_{STAH}	1 (5) × t_{IICcyc} + t_{Pcyc} + 300	-	ns	
	Repeated START condition input setup time	t_{STAS}	300	-	ns	
	STOP condition input setup time	t_{STOS}	300	-	ns	
	Data input setup time	t_{SDAS}	t_{IICcyc} + 50	-	ns	
	Data input hold time	t_{SDAH}	0	-	ns	
	SCL, SDA capacitive load	C_b	-	400	pF	

Note: t_{IICcyc}: IIC internal reference clock (IICφ) cycle, t_{Pcyc}: PCLKB cycle.
Note 1. Values in parentheses apply when ICMR3.NF[1:0] is set to 11b while the digital filter is enabled with ICFER.NFE set to 1.
Note 2. Only supported for SCL0_A, SDA0_A.
Note 3. Must use pins that have a letter appended to their name, for instance "_A", "_B", to indicate group membership. For the IIC interface, the AC portion of the electrical characteristics is measured for each group.

Table 2.28 IIC timing (2)
Setting of the SCL0_A, SDA0_A pins is not required with the Port Drive Capability bit in the PmnPFS register.

Parameter		Symbol	Min*1,*2	Max	Unit	Test conditions
IIC (Fast mode+) ICFER.FMPE = 1	SCL input cycle time	t_{SCL}	6 (12) × t_{IICcyc} + 240	-	ns	Figure 2.53
	SCL input high pulse width	t_{SCLH}	3 (6) × t_{IICcyc} + 120	-	ns	
	SCL input low pulse width	t_{SCLL}	3 (6) × t_{IICcyc} + 120	-	ns	
	SCL, SDA input rise time	t_{Sr}	-	120	ns	
	SCL, SDA input fall time	t_{Sf}	-	120	ns	
	SCL, SDA input spike pulse removal time	t_{SP}	0	1 (4) × t_{IICcyc}	ns	
	SDA input bus free time when wakeup function is disabled	t_{BUF}	3 (6) × t_{IICcyc} + 120	-	ns	
	SDA input bus free time when wakeup function is enabled	t_{BUF}	3 (6) × t_{IICcyc} + 4 × t_{Pcyc} + 120	-	ns	
	Start condition input hold time when wakeup function is disabled	t_{STAH}	t_{IICcyc} + 120	-	ns	
	START condition input hold time when wakeup function is enabled	t_{STAH}	1 (5) × t_{IICcyc} + t_{Pcyc} + 120	-	ns	
	Restart condition input setup time	t_{STAS}	120	-	ns	
	Stop condition input setup time	t_{STOS}	120	-	ns	
	Data input setup time	t_{SDAS}	t_{IICcyc} + 30	-	ns	
	Data input hold time	t_{SDAH}	0	-	ns	
	SCL, SDA capacitive load	C_b	-	550	pF	

Note: t_{IICcyc}: IIC internal reference clock (IICφ) cycle, t_{Pcyc}: PCLKB cycle.
Note 1. Values in parentheses apply when ICMR3.NF[1:0] is set to 11b while the digital filter is enabled with ICFER.NFE set to 1.
Note 2. Cb indicates the total capacity of the bus line.

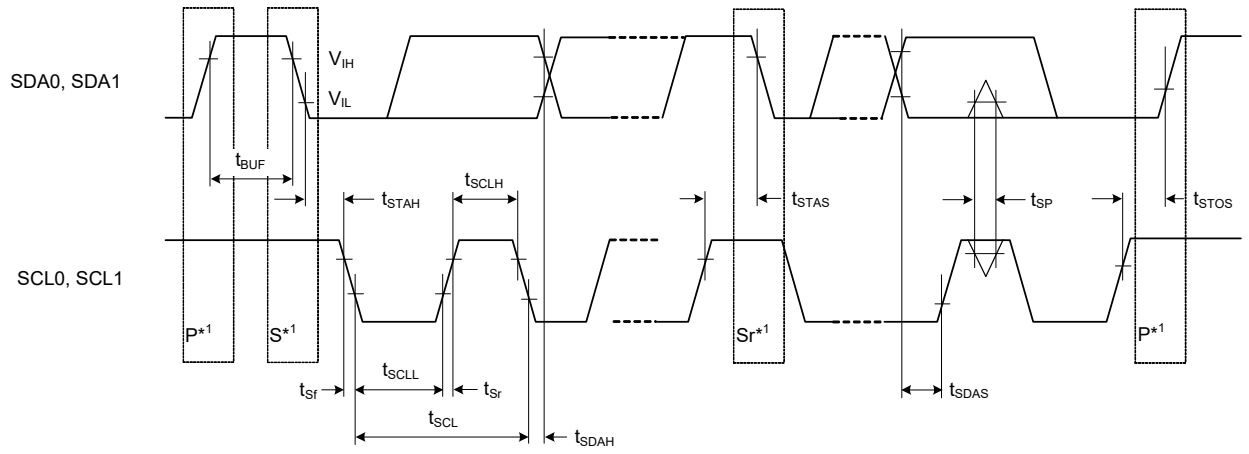

Note 1. S, P, and Sr indicate the following:
S: Start condition
P: Stop condition
Sr: Restart condition

Test conditions:
V_{IH} = VCC × 0.7, V_{IL} = VCC × 0.3
V_{OL} = 0.6 V, I_{OL} = 6 mA (ICFER.FMPE = 0)
V_{OL} = 0.4 V, I_{OL} = 15 mA (ICFER.FMPE = 1)

Figure 2.53 I²C bus interface input/output timing

2.3.14 SSIE Timing

Table 2.29 SSIE timing

(1) High drive output is selected with the Port Drive Capability bit in the PmnPFS register.

(2) Use pins that have a letter appended to their names, for instance "_A" or "_B" to indicate group membership. For the SSIE interface, the AC portion of the electrical characteristics is measured for each group.

Parameter			Symbol	Target specification Min.	Target specification Max.	Unit	Comments
SSIBCK0	Cycle	Master	t_O	80	-	ns	Figure 2.54
		Slave	t_I	80	-	ns	
	High level/low level	Master	t_{HC}/t_{LC}	0.35	-	t_O	
		Slave		0.35	-	t_I	
	Rising time/falling time	Master	t_{RC}/t_{FC}	-	0.15	t_O / t_I	
		Slave		-	0.15	t_O / t_I	
SSILRCK0/SSIFS0, SSITXD0, SSIRXD0	Input set up time	Master	t_{SR}	12	-	ns	Figure 2.56, Figure 2.57
		Slave		12	-	ns	
	Input hold time	Master	t_{HR}	8	-	ns	
		Slave		15	-	ns	
	Output delay time	Master	t_{DTR}	-10	5	ns	
		Slave		0	20	ns	Figure 2.56, Figure 2.57
	Output delay time from SSILRCK0/SSIFS0 change	Slave	t_{DTRW}	-	20	ns	Figure 2.58*1
GTIOC1A, AUDIO_CLK	Cycle		t_{EXcyc}	20	-	ns	Figure 2.55
	High level/low level		t_{EXL}/ t_{EXH}	0.4	0.6	t_{EXcyc}	

Note 1. For slave-mode transmission, SSIE has a path through which the signal input from the SSILRCK0/SSIFS0 pin is used to generate transmit data, and the transmit data is logically output to the SSITXD0 pin.

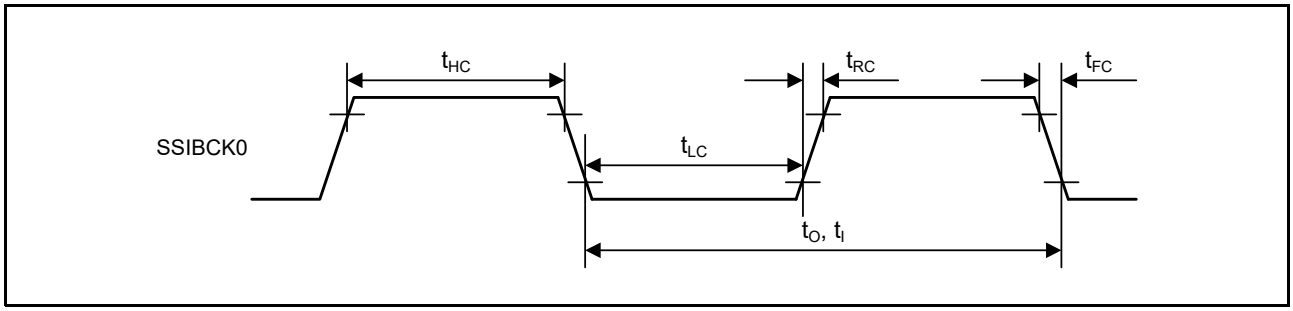

Figure 2.54 SSIE clock input/output timing

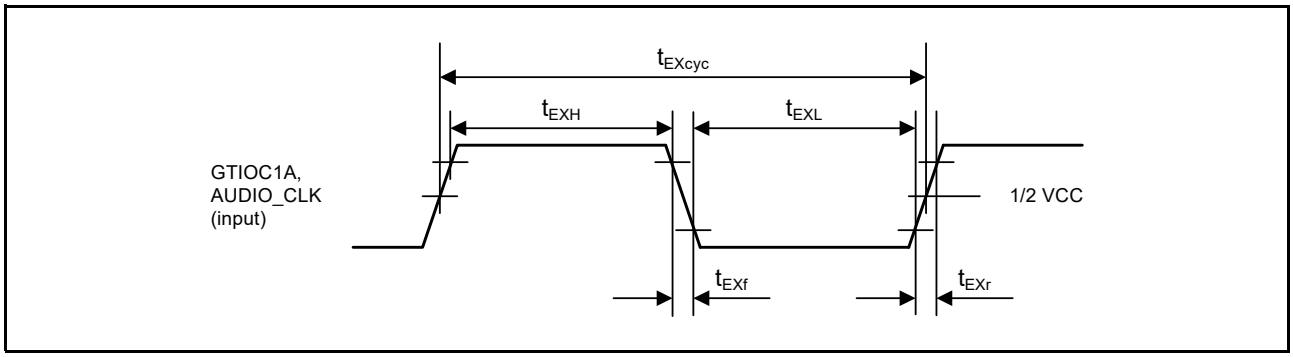

Figure 2.55 Clock input timing

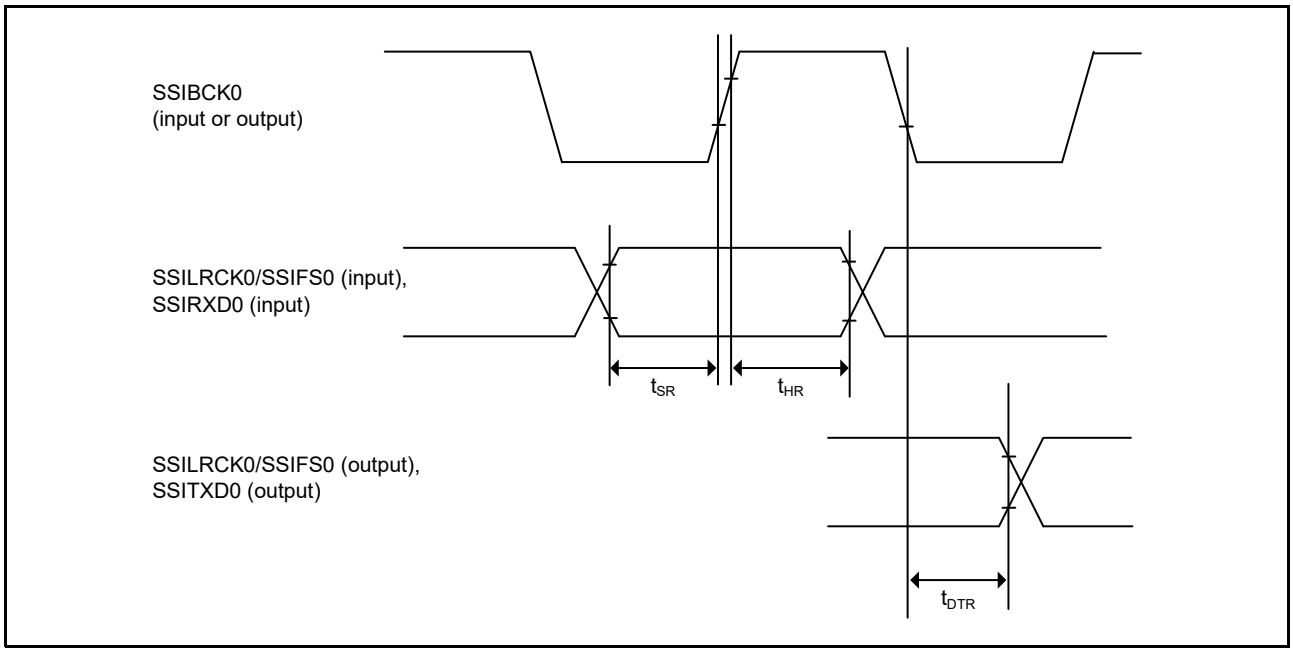

Figure 2.56 SSIE data transmit and receive timing when SSICR.BCKP = 0

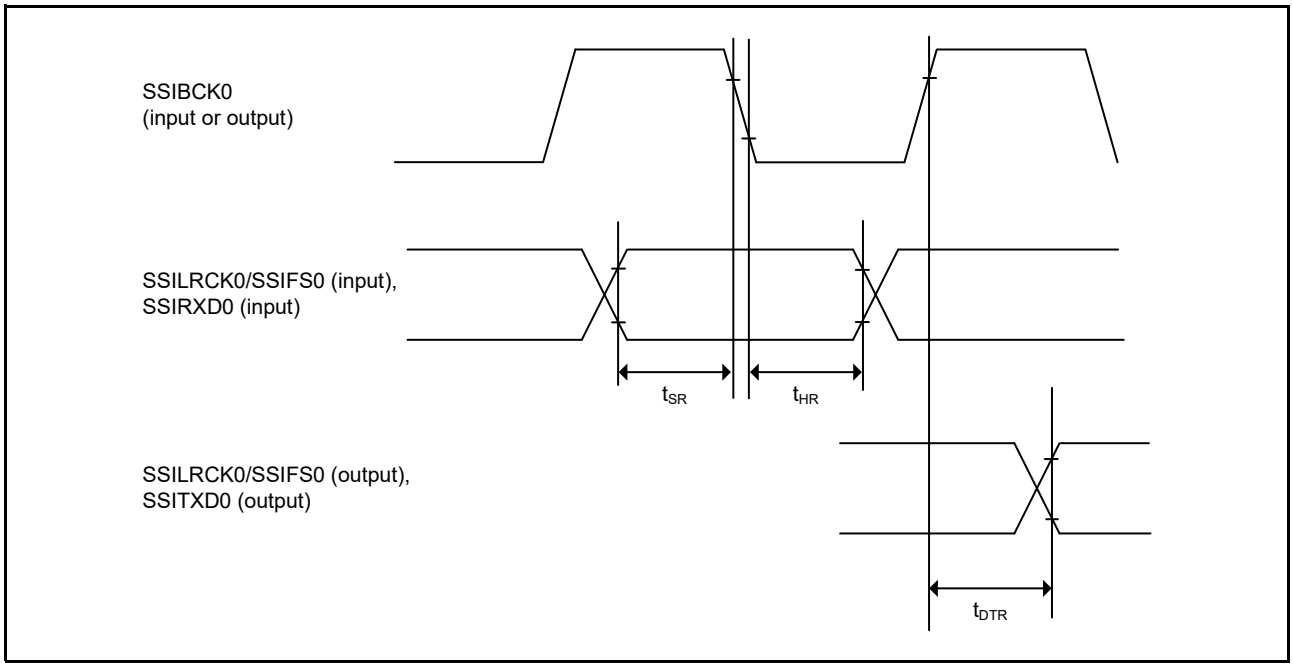

Figure 2.57 SSIE data transmit and receive timing when SSICR.BCKP = 1

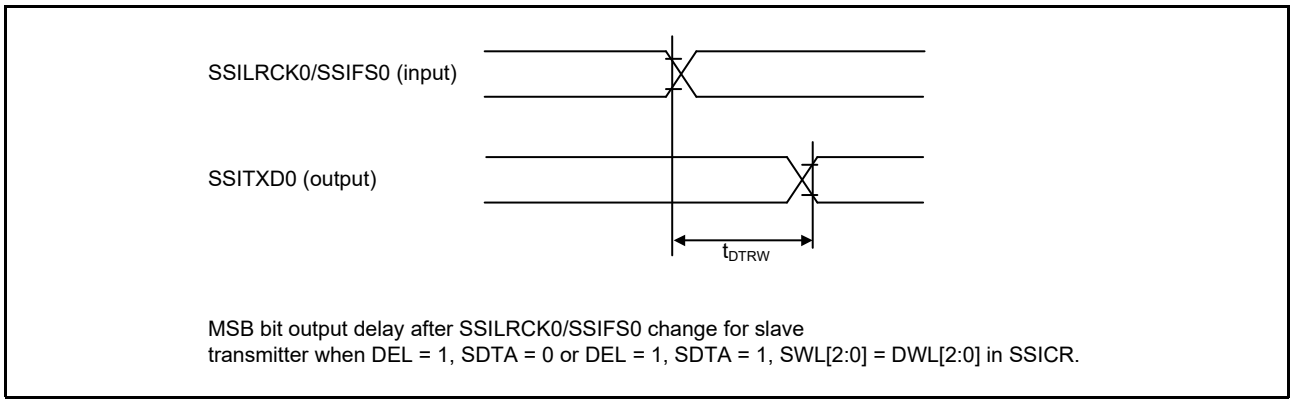

Figure 2.58 SSIE data output delay after SSILRCK0/SSIFS0 change

2.3.15 SD/MMC Host Interface Timing

Table 2.30 SD/MMC Host Interface signal timing

Conditions: High drive output is selected in the Port Drive Capability bit in the PmnPFS register.
Clock duty ratio is 50%.

Parameter	Symbol	Min	Max	Unit	Test conditions*1
SDnCLK clock cycle	T_{SDCYC}	20	-	ns	Figure 2.59
SDnCLK clock high pulse width	T_{SDWH}	6.5	-	ns	
SDnCLK clock low pulse width	T_{SDWL}	6.5	-	ns	
SDnCLK clock rise time	T_{SDLH}	-	3	ns	
SDnCLK clock fall time	T_{SDHL}	-	3	ns	
SDnCMD/SDnDATm output data delay	T_{SDODLY}	-6	5	ns	
SDnCMD/SDnDATm input data setup	T_{SDIS}	4	-	ns	
SDnCMD/SDnDATm input data hold	T_{SDIH}	2	-	ns	

Note 1. Must use pins that have a letter appended to their name, for instance "_A", "_B", to indicate group membership. For the SD/MMC Host interface, the AC portion of the electrical characteristics is measured for each group.

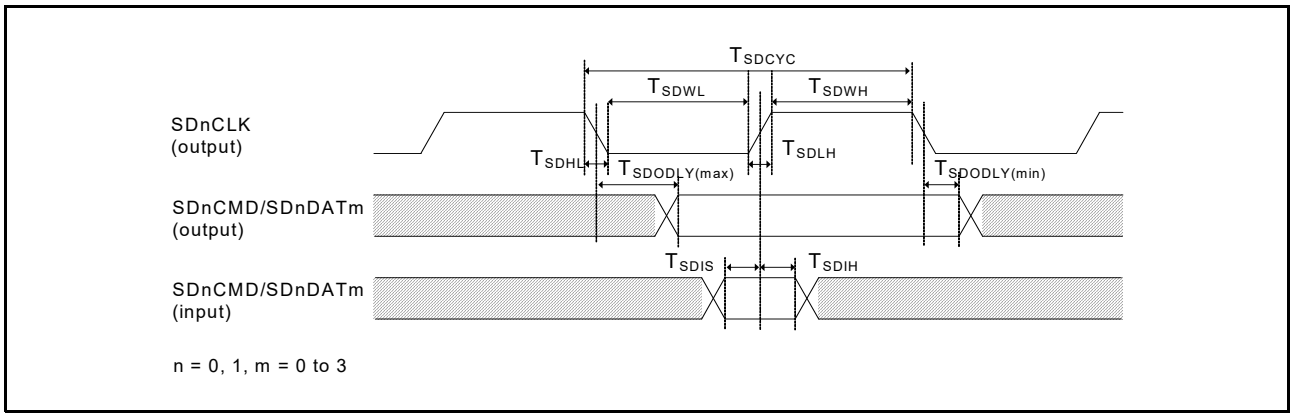

Figure 2.59 SD/MMC Host Interface signal timing

2.4 USB Characteristics

2.4.1 USBFS Timing

Table 2.31 USBFS low-speed characteristics for host only (USB_DP and USB_DM pin characteristics)
Conditions: VCC = AVCC0 = VCC_USB = VBATT = 3.0 to 3.6V, 2.7 ≤ VREFH0/VREFH ≤ AVCC0, UCLK = 48 MHz

Parameter		Symbol	Min	Typ	Max	Unit	Test conditions
Input characteristics	Input high voltage	V_{IH}	2.0	-	-	V	-
	Input low voltage	V_{IL}	-	-	0.8	V	-
	Differential input sensitivity	V_{DI}	0.2	-	-	V	| USB_DP - USB_DM |
	Differential common-mode range	V_{CM}	0.8	-	2.5	V	-
Output characteristics	Output high voltage	V_{OH}	2.8	-	3.6	V	I_{OH} = -200 μA
	Output low voltage	V_{OL}	0.0	-	0.3	V	I_{OL}= 2 mA
	Cross-over voltage	V_{CRS}	1.3	-	2.0	V	Figure 2.60
	Rise time	t_{LR}	75	-	300	ns	
	Fall time	t_{LF}	75	-	300	ns	
	Rise/fall time ratio	t_{LR} / t_{LF}	80	-	125	%	t_{LR}/ t_{LF}
Pull-up and pull-down characteristics	USB_DP and USB_DM pull-down resistance in host controller mode	R_{pd}	14.25	-	24.80	kΩ	-

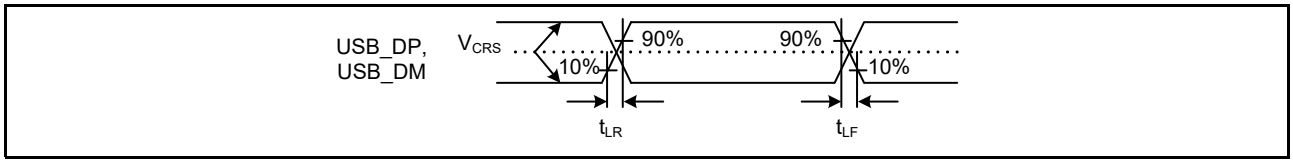

Figure 2.60 USB_DP and USB_DM output timing in low-speed mode

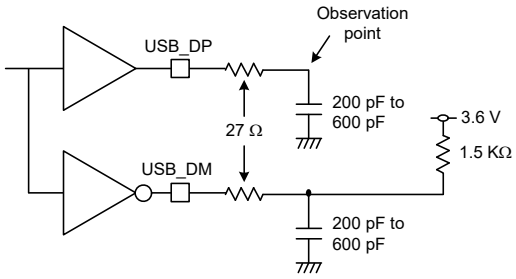

Figure 2.61 Test circuit in low-speed mode

Table 2.32 USBFS full-speed characteristics (USB_DP and USB_DM pin characteristics)
Conditions: VCC = AVCC0 = VCC_USB = VBATT = 3.0 to 3.6 V, 2.7 ≤ VREFH0/VREFH ≤ AVCC0, UCLK = 48 MHz

Parameter		Symbol	Min	Typ	Max	Unit	Test conditions
Input characteristics	Input high voltage	V_{IH}	2.0	-	-	V	-
	Input low voltage	V_{IL}	-	-	0.8	V	-
	Differential input sensitivity	V_{DI}	0.2	-	-	V	| USB_DP - USB_DM |
	Differential common-mode range	V_{CM}	0.8	-	2.5	V	-
Output characteristics	Output high voltage	V_{OH}	2.8	-	3.6	V	I_{OH} = -200 μA
	Output low voltage	V_{OL}	0.0	-	0.3	V	I_{OL}= 2 mA
	Cross-over voltage	V_{CRS}	1.3	-	2.0	V	Figure 2.62
	Rise time	t_{LR}	4	-	20	ns	
	Fall time	t_{LF}	4	-	20	ns	
	Rise/fall time ratio	t_{LR} / t_{LF}	90	-	111.11	%	t_{FR}/ t_{FF}
	Output resistance	Z_{DRV}	28	-	44	Ω	USBFS: Rs = 27 Ω included
Pull-up and pull-down characteristics	DM pull-up resistance in device controller mode	R_{pu}	0.900	-	1.575	kΩ	During idle state
			1.425	-	3.090	kΩ	During transmission and reception
	USB_DP and USB_DM pull-down resistance in host controller mode	R_{pd}	14.25	-	24.80	kΩ	-

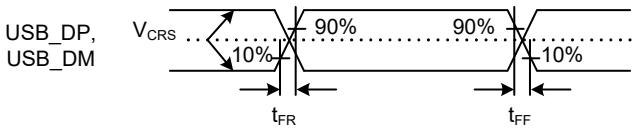

Figure 2.62 USB_DP and USB_DM output timing in full-speed mode

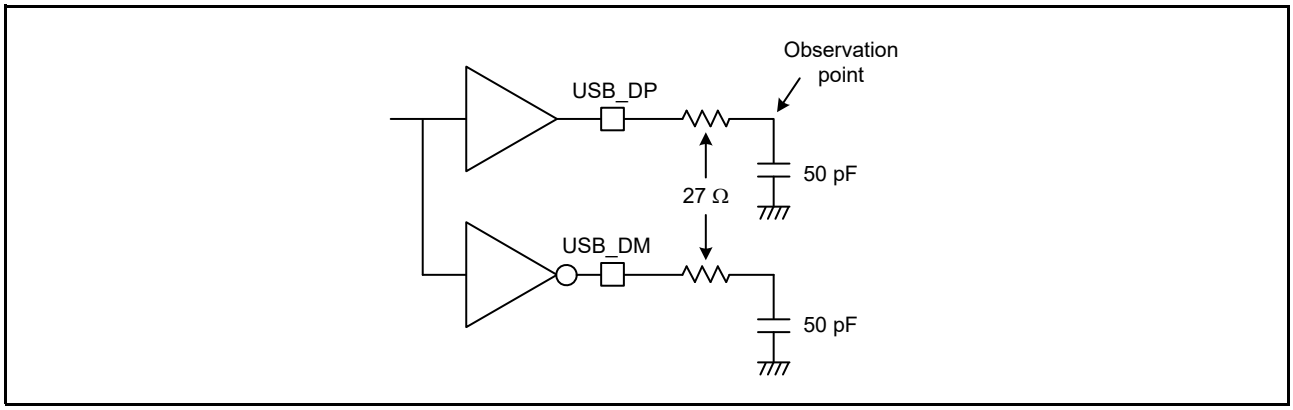

Figure 2.63 Test circuit in full-speed mode

2.5 ADC12 Characteristics

Table 2.33 A/D conversion characteristics for unit 0 (1 of 2)
Conditions: PCLKC = 1 to 60 MHz

Parameter			Min	Typ	Max	Unit	Test conditions
Frequency			1	-	60	MHz	-
Analog input capacitance			-	-	30	pF	-
Quantization error			-	±0.5	-	LSB	-
Resolution			-	-	12	Bits	-
Channel-dedicated sample-and-hold circuits in use*3 (AN000 to AN002)	Conversion time*1 (operation at PCLKC = 60 MHz)	Permissible signal source impedance Max. = 1 kΩ	1.06 (0.4 + 0.25)*2	-	-	μs	• Sampling of channel-dedicated sample-and-hold circuits in 24 states • Sampling in 15 states
	Offset error		-	±1.5	±3.5	LSB	AN000 to AN002 = 0.25 V
	Full-scale error		-	±1.5	±3.5	LSB	AN000 to AN002 = VREFH0- 0.25 V
	Absolute accuracy		-	±2.5	±5.5	LSB	-
	DNL differential nonlinearity error		-	±1.0	±2.0	LSB	-
	INL integral nonlinearity error		-	±1.5	±3.0	LSB	-
	Holding characteristics of sample-and hold circuits		-	-	20	μs	-
	Dynamic range		0.25	-	VREFH0 - 0.25	V	-
Channel-dedicated sample-and-hold circuits not in use (AN000 to AN002)	Conversion time*1 (operation at PCLKC = 60 MHz)	Permissible signal source impedance Max. = 1 kΩ	0.48 (0.267)*2	-	-	μs	Sampling in 16 states
	Offset error		-	±1.0	±2.5	LSB	-
	Full-scale error		-	±1.0	±2.5	LSB	-
	Absolute accuracy		-	±2.0	±4.5	LSB	-
	DNL differential nonlinearity error		-	±0.5	±1.5	LSB	-
	INL integral nonlinearity error		-	±1.0	±2.5	LSB	-
High-precision channels (AN003, AN005, AN006)	Conversion time*1 (operation at PCLKC = 60 MHz)	Permissible signal source impedance Max. = 1 kΩ	0.48 (0.267)*2	-	-	μs	Sampling in 16 states
		Max. = 400 Ω	0.40 (0.183)*2	-	-	μs	Sampling in 11 states VCC = AVCC0 = 3.0 to 3.6 V 3.0 V ≤ VREFH0 ≤ AVCC0
	Offset error		-	±1.0	±2.5	LSB	-
	Full-scale error		-	±1.0	±2.5	LSB	-
	Absolute accuracy		-	±2.0	±4.5	LSB	-
	DNL differential nonlinearity error		-	±0.5	±1.5	LSB	-

Table 2.33 A/D conversion characteristics for unit 0 (2 of 2)
Conditions: PCLKC = 1 to 60 MHz

Parameter			Min	Typ	Max	Unit	Test conditions
High-precision channels (AN003, AN005, AN006)	INL integral nonlinearity error		-	±1.0	±2.5	LSB	-
High-precision channels (AN007)	Conversion time*1 (operation at PCLKC = 60 MHz)	Permissible signal source impedance Max. = 1 kΩ	0.75 (0.533)*2	-	-	μs	Sampling in 32 states
	Offset error		-	±1.0	±2.5	LSB	-
	Full-scale error		-	±1.0	±2.5	LSB	-
	Absolute accuracy		-	±2.0	±4.5	LSB	-
	DNL differential nonlinearity error		-	±0.5	±1.5	LSB	-
	INL integral nonlinearity error		-	±1.0	±2.5	LSB	-
Normal-precision channels (AN016 to AN018, AN020)	Conversion time*1 (Operation at PCLKC = 60 MHz)	Permissible signal source impedance Max. = 1 kΩ	0.88 (0.667)*2	-	-	μs	Sampling in 40 states
	Offset error		-	±1.0	±5.5	LSB	-
	Full-scale error		-	±1.0	±5.5	LSB	-
	Absolute accuracy		-	±2.0	±7.5	LSB	-
	DNL differential nonlinearity error		-	±0.5	±4.5	LSB	-
	INL integral nonlinearity error		-	±1.0	±5.5	LSB	-

Note: These specification values apply when there is no access to the external bus during A/D conversion. If access occurs during A/D conversion, the values might not fall within the indicated ranges.
The use of ports 0 as digital outputs is not allowed when the 12-bit A/D converter is used.
The characteristics apply when AVCC0, AVSS0, VREFH0, VREFH, VREFL0, VREFL, and 12-bit A/D converter input voltage are stable.

Note 1. The conversion time includes the sampling and comparison times. The number of sampling states is indicated for the test conditions.

Note 2. Values in parentheses indicate the sampling time.

Note 3. When simultaneously using channel-dedicated sample-and-hold circuits in unit 0 and unit 1, see Table 2.35.

Table 2.34 A/D conversion characteristics for unit 1 (1 of 2)
Conditions: PCLKC = 1 to 60 MHz

Parameter			Min	Typ	Max	Unit	Test conditions
Frequency			1	-	60	MHz	-
Analog input capacitance			-	-	30	pF	-
Quantization error			-	±0.5	-	LSB	-
Resolution			-	-	12	Bits	-
Channel-dedicated sample-and-hold circuits in use*3 (AN100 to AN102)	Conversion time*1 (operation at PCLKC = 60 MHz)	Permissible signal source impedance Max. = 1 kΩ	1.06 (0.4 + 0.25)*2	-	-	μs	• Sampling of channel-dedicated sample-and-hold circuits in 24 states • Sampling in 15 states
	Offset error		-	±1.5	±3.5	LSB	AN100 to AN102 = 0.25 V
	Full-scale error		-	±1.5	±3.5	LSB	AN100 to AN102 = VREFH - 0.25 V
	Absolute accuracy		-	±2.5	±5.5	LSB	-
	DNL differential nonlinearity error		-	±1.0	±2.0	LSB	-
	INL integral nonlinearity error		-	±1.5	±3.0	LSB	-
	Holding characteristics of sample-and hold circuits		-	-	20	μs	-
	Dynamic range		0.25	-	VREFH - 0.25	V	-

Table 2.34 A/D conversion characteristics for unit 1 (2 of 2)
Conditions: PCLKC = 1 to 60 MHz

Parameter			Min	Typ	Max	Unit	Test conditions
Channel-dedicated sample-and-hold circuits not in use (AN100 to AN102)	Conversion time*1 (Operation at PCLKC = 60 MHz)	Permissible signal source impedance Max. = 1 kΩ	0.48 (0.267)*2	-	-	μs	Sampling in 16 states
	Offset error		-	±1.0	±2.5	LSB	-
	Full-scale error		-	±1.0	±2.5	LSB	-
	Absolute accuracy		-	±2.0	±4.5	LSB	-
	DNL differential nonlinearity error		-	±0.5	±1.5	LSB	-
	INL integral nonlinearity error		-	±1.0	±2.5	LSB	-
High-precision channels (AN105, AN106)	Conversion time*1 (Operation at PCLKC = 60 MHz)	Permissible signal source impedance Max. = 1 kΩ	0.48 (0.267)*2	-	-	μs	Sampling in 16 states
		Max. = 400 Ω	0.40 (0.183)*2	-	-	μs	Sampling in 11 states VCC = AVCC0 = 3.0 to 3.6 V 3.0 V ≤ VREFH ≤ AVCC0
	Offset error		-	±1.0	±2.5	LSB	-
	Full-scale error		-	±1.0	±2.5	LSB	-
	Absolute accuracy		-	±2.0	±4.5	LSB	-
	DNL differential nonlinearity error		-	±0.5	±1.5	LSB	-
	INL integral nonlinearity error		-	±1.0	±2.5	LSB	-
High-precision channels (AN107)	Conversion time*1 (Operation at PCLKC = 60 MHz)	Permissible signal source impedance Max. = 1 kΩ	0.75 (0.533)*2	-	-	μs	Sampling in 32 states
	Offset error		-	±1.0	±2.5	LSB	-
	Full-scale error		-	±1.0	±2.5	LSB	-
	Absolute accuracy		-	±2.0	±4.5	LSB	-
	DNL differential nonlinearity error		-	±0.5	±1.5	LSB	-
	INL integral nonlinearity error		-	±1.0	±2.5	LSB	-
Normal-precision channels (AN116, AN117)	Conversion time*1 (Operation at PCLKC = 60 MHz)	Permissible signal source impedance Max. = 1 kΩ	0.88 (0.667)*2	-	-	μs	Sampling in 40 states
	Offset error		-	±1.0	±5.5	LSB	-
	Full-scale error		-	±1.0	±5.5	LSB	-
	Absolute accuracy		-	±2.0	±7.5	LSB	-
	DNL differential nonlinearity error		-	±0.5	±4.5	LSB	-
	INL integral nonlinearity error		-	±1.0	±5.5	LSB	-

Note: These specification values apply when there is no access to the external bus during A/D conversion. If access occurs during A/D conversion, the values might not fall within the indicated ranges.
The use of ports 0 as digital outputs is not allowed when the 12-bit A/D converter is used.
The characteristics apply when AVCC0, AVSS0, VREFH0, VREFH, VREFL0, VREFL, and 12-bit A/D converter input voltage are stable.

Note 1. The conversion time includes the sampling and comparison times. The number of sampling states is indicated for the test conditions.

Note 2. Values in parentheses indicate the sampling time.

Note 3. When simultaneously using channel-dedicated sample-and-hold circuits in unit 0 and unit 1, see Table 2.35.

Table 2.35 A/D conversion characteristics for simultaneous use of channel-dedicated sample-and-hold circuits in unit 0 and unit 1

Conditions: PCLKC = 30/60 MHz

Parameter		Min	Typ	Max	Test conditions
Channel-dedicated sample-and-hold circuits in use with continious sampling function enabled (AN000 to AN002)	Offset error	-	±1.5	±5.0	• PCLKC = 60 MHz • Sampling in 15 states
	Full-scale error	-	±2.5	±5.0	
	Absolute accuracy	-	±4.0	±8.0	
Channel-dedicated sample-and-hold circuits in use with continious sampling function enabled (AN100 to AN102)	Offset error	-	±1.5	±5.0	
	Full-scale error	-	±2.5	±5.0	
	Absolute accuracy	-	±4.0	±8.0	
Channel-dedicated sample-and-hold circuits in use with continious sampling function enabled (AN000 to AN002)	Offset error	-	±1.5	±3.5	• PCLKC = 30 MHz • Sampling in 7 states
	Full-scale error	-	±1.5	±3.5	
	Absolute accuracy	-	±3.0	+4.5/-6.5	
Channel-dedicated sample-and-hold circuits in use with continious sampling function enabled (AN100 to AN102)	Offset error	-	±1.5	±3.5	
	Full-scale error	-	±1.5	±3.5	
	Absolute accuracy	-	±3.0	+4.5/-6.5	

Note: When simultaneously using channel-dedicated sample-and-hold circuits in unit 0 and unit 1, setting the ADSHMSR.SHMD bit to 1 is recommended.

Table 2.36 A/D internal reference voltage characteristics

Parameter	Min	Typ	Max	Unit	Test conditions
A/D internal reference voltage	1.13	1.18	1.23	V	-
Sampling time	4.15	-	-	μs	-

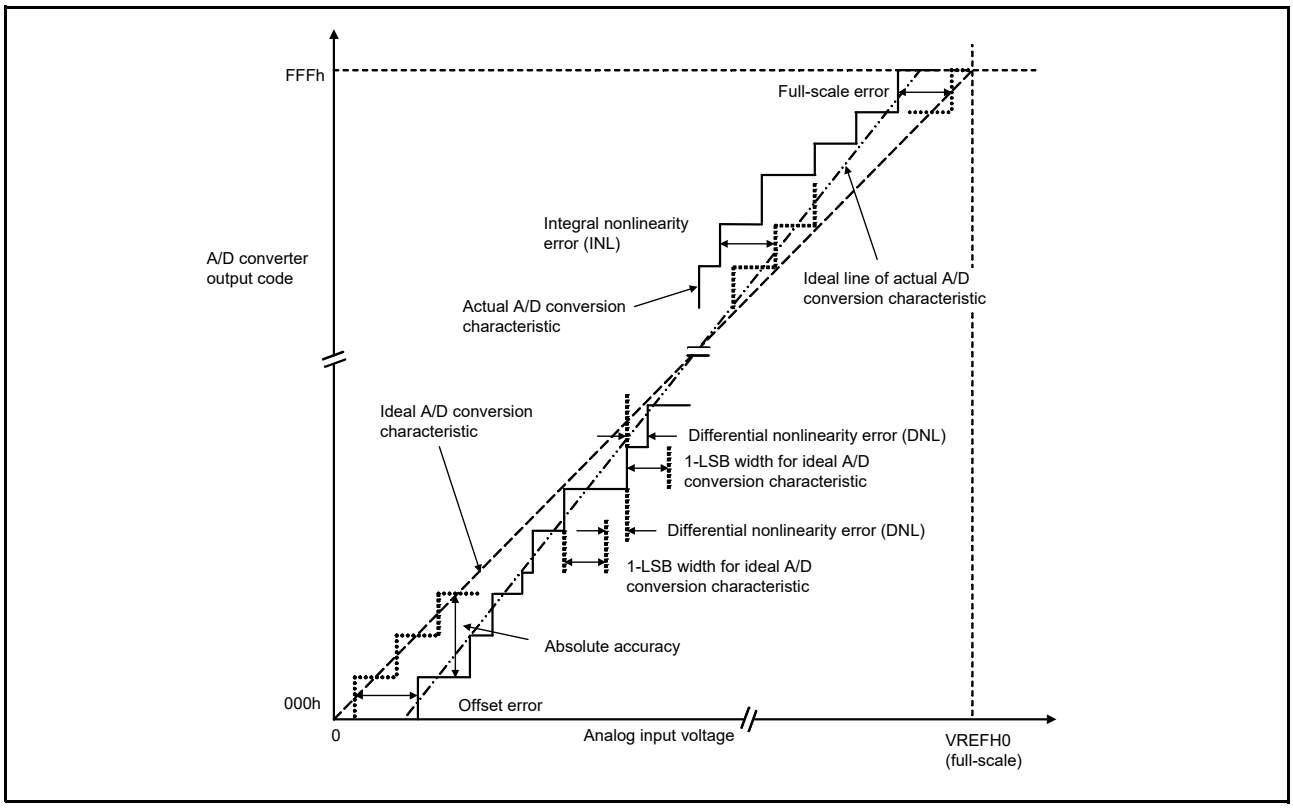

Figure 2.64 Illustration of ADC12 characteristic terms

Absolute accuracy

Absolute accuracy is the difference between output code based on the theoretical A/D conversion characteristics, and the actual A/D conversion result. When measuring absolute accuracy, the voltage at the midpoint of the width of the analog input voltage (1-LSB width), which can meet the expectation of outputting an equal code based on the theoretical A/D conversion characteristics, is used as the analog input voltage. For example, if 12-bit resolution is used and the reference voltage VREFH0 is 3.072 V, then the 1-LSB width becomes 0.75 mV, and 0 mV, 0.75 mV, and 1.5 mV are used as the analog input voltages. If the analog input voltage is 6 mV, an absolute accuracy of ±5 LSB means that the actual A/D conversion result is in the range of 003h to 00Dh, though an output code of 008h can be expected from the theoretical A/D conversion characteristics.

Integral nonlinearity error (INL)

Integral nonlinearity error is the maximum deviation between the ideal line when the measured offset and full-scale errors are zeroed, and the actual output code.

Differential nonlinearity error (DNL)

Differential nonlinearity error is the difference between the 1-LSB width based on the ideal A/D conversion characteristics and the width of the actual output code.

Offset error

Offset error is the difference between the transition point of the ideal first output code and the actual first output code.

Full-scale error

Full-scale error is the difference between the transition point of the ideal last output code and the actual last output code.

2.6 DAC12 Characteristics

Table 2.37 D/A conversion characteristics

Parameter	Min	Typ	Max	Unit	Test conditions
Resolution	-	-	12	Bits	-
Without output amplifier					
Absolute accuracy	-	-	±24	LSB	Resistive load 2 MΩ
INL	-	±2.0	±8.0	LSB	Resistive load 2 MΩ
DNL	-	±1.0	±2.0	LSB	-
Output impedance	-	8.5	-	kΩ	-
Conversion time	-	-	3.0	μs	Resistive load 2 MΩ, Capacitive load 20 pF
Output voltage range	0	-	VREFH	V	-
With output amplifier					
INL	-	±2.0	±4.0	LSB	-
DNL	-	±1.0	±2.0	LSB	-
Conversion time	-	-	4.0	μs	-
Resistive load	5	-	-	kΩ	-
Capacitive load	-	-	50	pF	-
Output voltage range	0.2	-	VREFH - 0.2	V	-

2.7 TSN Characteristics

Table 2.38 TSN characteristics

Parameter	Symbol	Min	Typ	Max	Unit	Test conditions
Relative accuracy	-	-	±1.0	-	°C	-
Temperature slope	-	-	4.0	-	mV/°C	-
Output voltage (at 25°C)	-	-	1.24	-	V	-
Temperature sensor start time	t_{START}	-	-	30	μs	-
Sampling time	-	4.15	-	-	μs	-

2.8 OSC Stop Detect Characteristics

Table 2.39 Oscillation stop detection circuit characteristics

Parameter	Symbol	Min	Typ	Max	Unit	Test conditions
Detection time	t_{dr}	-	-	1	ms	Figure 2.65

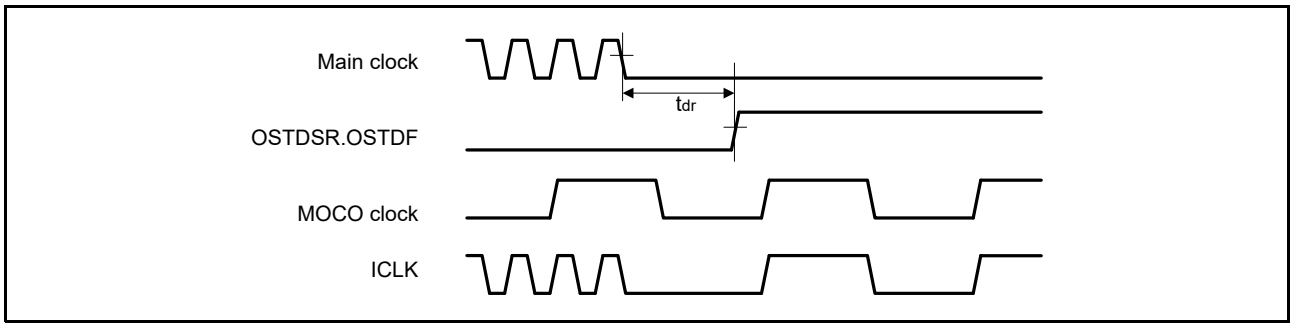

Figure 2.65 Oscillation stop detection timing

2.9 POR and LVD Characteristics

Table 2.40 Power-on reset circuit and voltage detection circuit characteristics (1 of 2)

Parameter			Symbol	Min	Typ	Max	Unit	Test conditions
Voltage detection level	Power-on reset (POR)	DPSBYCR.DEEPCUT[1:0] = 00b or 01b	V_{POR}	2.5	2.6	2.7	V	Figure 2.66
		DPSBYCR.DEEPCUT[1:0] = 11b		1.8	2.25	2.7		
	Voltage detection circuit (LVD0)		V_{det0_1}	2.84	2.94	3.04		Figure 2.67
			V_{det0_2}	2.77	2.87	2.97		
			V_{det0_3}	2.70	2.80	2.90		
	Voltage detection circuit (LVD1)		V_{det1_1}	2.89	2.99	3.09		Figure 2.68
			V_{det1_2}	2.82	2.92	3.02		
			V_{det1_3}	2.75	2.85	2.95		
	Voltage detection circuit (LVD2)		V_{det2_1}	2.89	2.99	3.09		Figure 2.69
			V_{det2_2}	2.82	2.92	3.02		
			V_{det2_3}	2.75	2.85	2.95		

Table 2.40 Power-on reset circuit and voltage detection circuit characteristics (2 of 2)

Parameter		Symbol	Min	Typ	Max	Unit	Test conditions
Internal reset time	Power-on reset time	t_{POR}	-	4.5	-	ms	Figure 2.66
	LVD0 reset time	t_{LVD0}	-	0.51	-		Figure 2.67
	LVD1 reset time	t_{LVD1}	-	0.38	-		Figure 2.68
	LVD2 reset time	t_{LVD2}	-	0.38	-		Figure 2.69
Minimum VCC down time*1		t_{VOFF}	200	-	-	μs	Figure 2.66, Figure 2.67
Response delay		t_{det}	-	-	200	μs	Figure 2.66 to Figure 2.69
LVD operation stabilization time (after LVD is enabled)		$t_{d(E-A)}$	-	-	10	μs	Figure 2.68, Figure 2.69
Hysteresis width (LVD1 and LVD2)		V_{LVH}	-	70	-	mV	

Note 1. The minimum VCC down time indicates the time when VCC is below the minimum value of voltage detection levels V_{POR}, V_{det1}, and V_{det2} for POR and LVD.

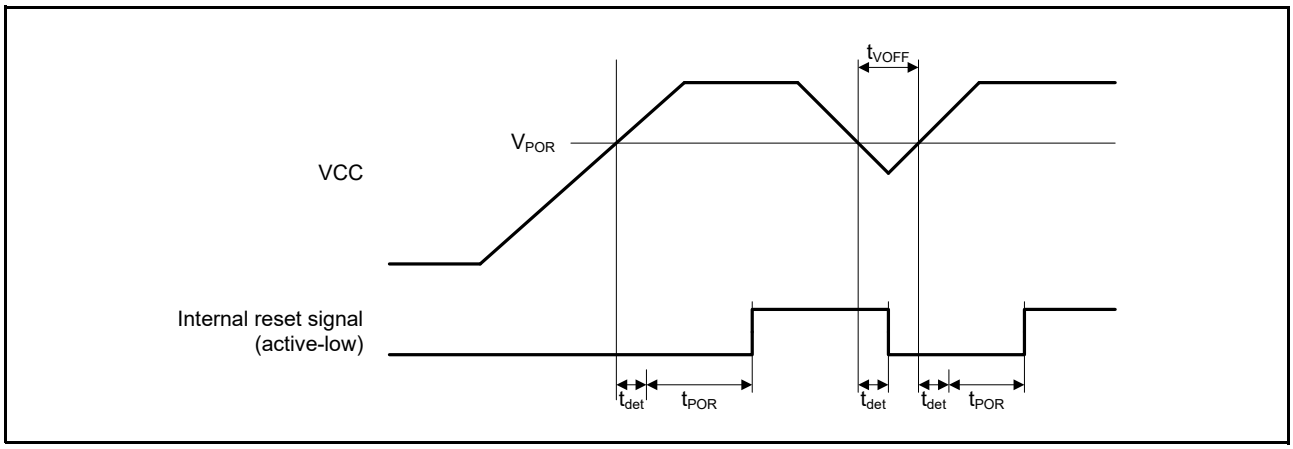

Figure 2.66 Power-on reset timing

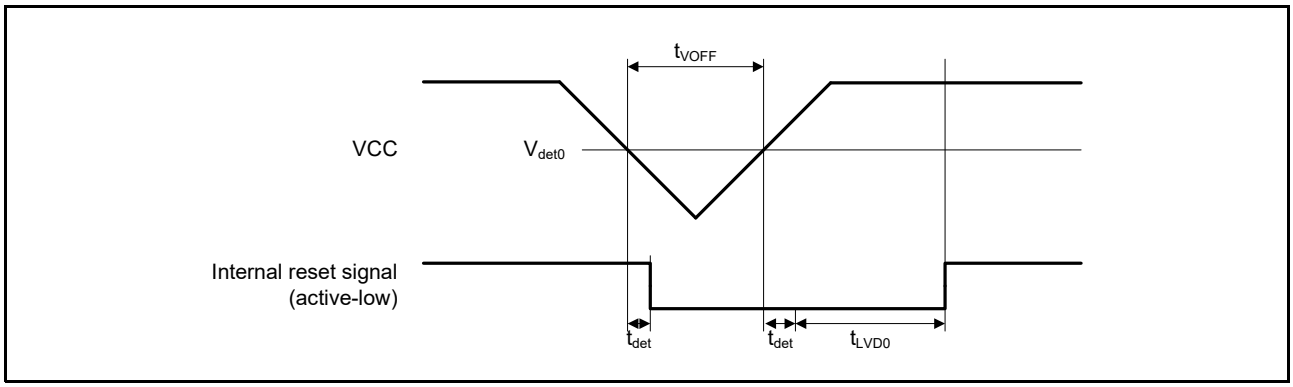

Figure 2.67 Voltage detection circuit timing (V_{det0})

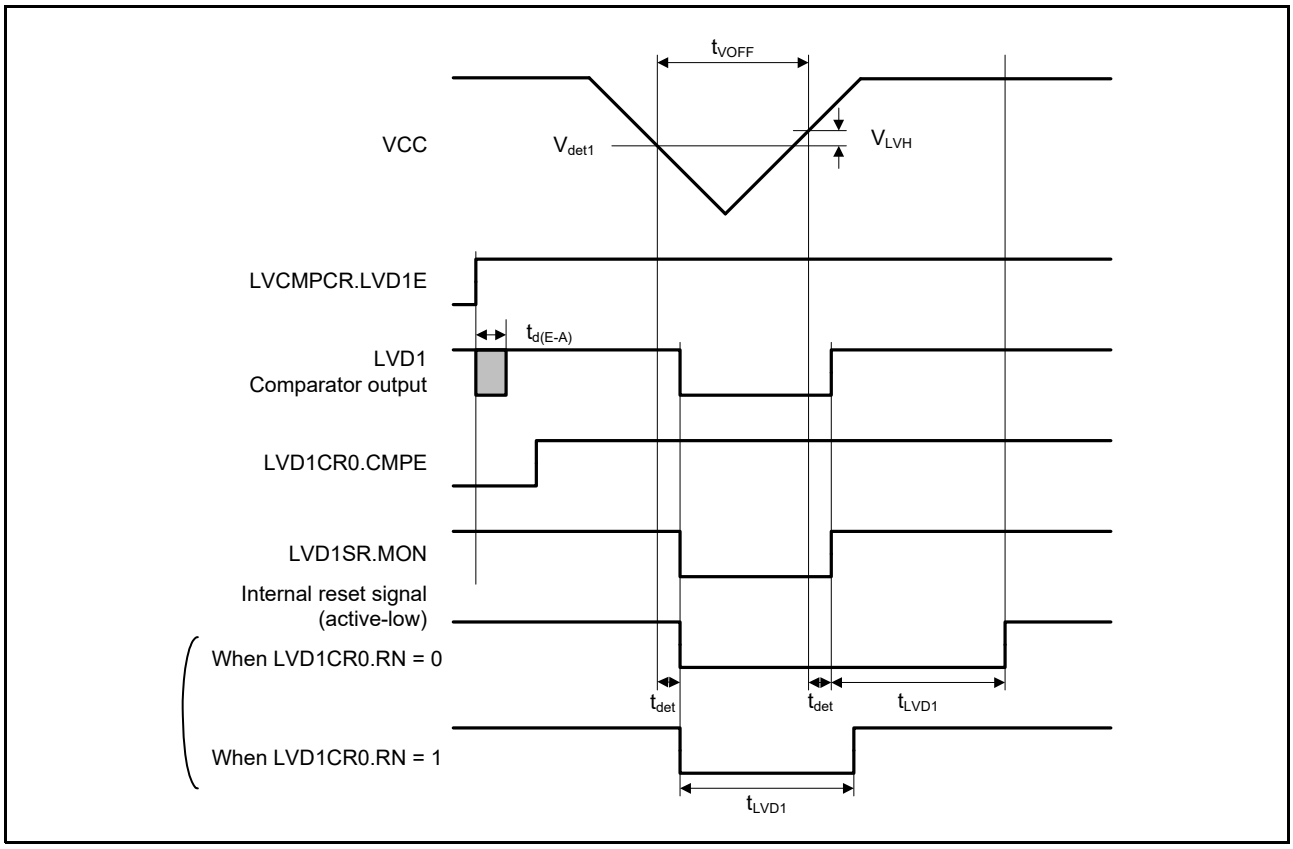

Figure 2.68 Voltage detection circuit timing (V_{det1})

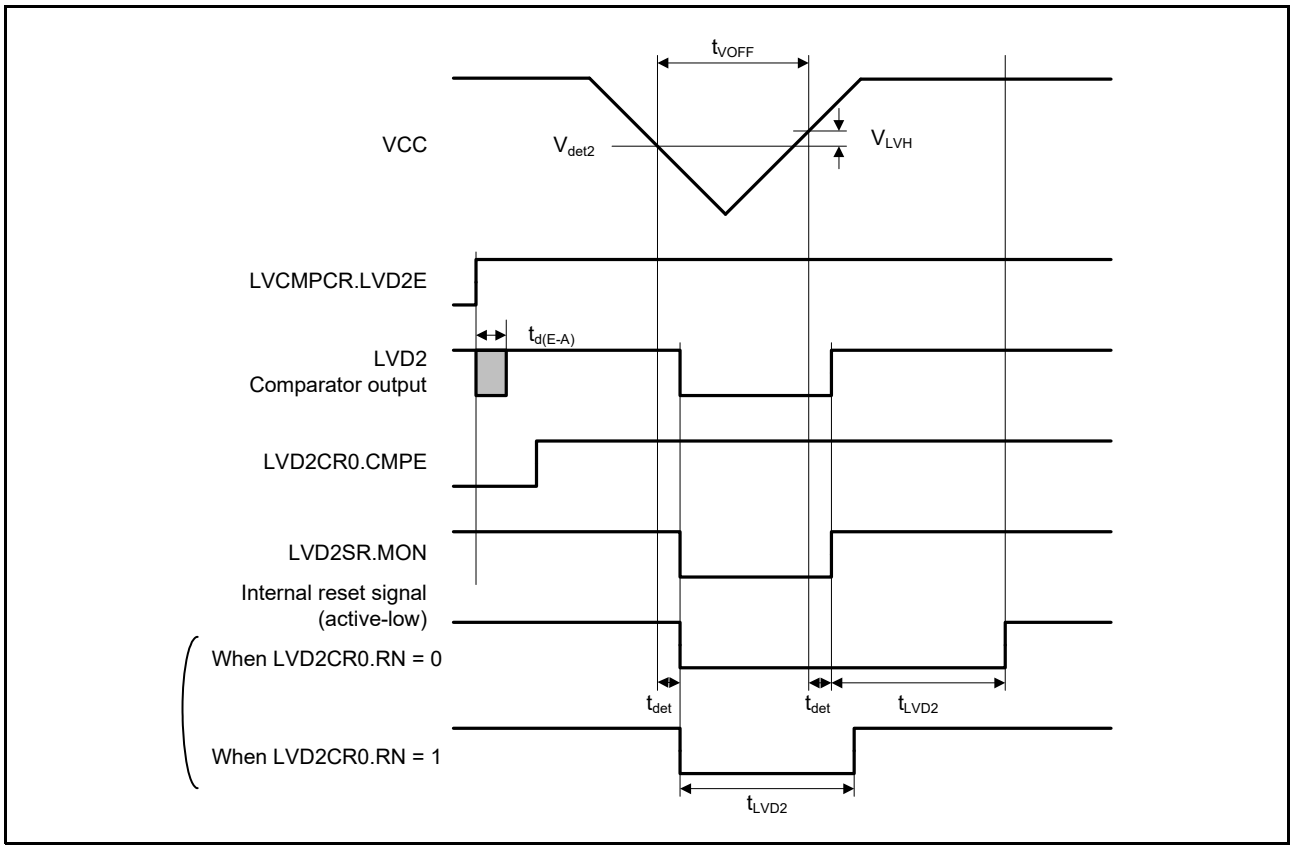

Figure 2.69 Voltage detection circuit timing (V_{det2})

2.10 VBATT Characteristics

Table 2.41 Battery backup function characteristics

Conditions: VCC = AVCC0 = VCC_USB = 2.7 to 3.6 V, 2.7 ≤ VREFH0/VREFH ≤ AVCC0, VBATT = 1.65 to 3.6 V*1

Parameter	Symbol	Min	Typ	Max	Unit	Test conditions
Voltage level for switching to battery backup	$V_{DETBATT}$	2.50	2.60	2.70	V	Figure 2.70
Lower-limit VBATT voltage for power supply switching caused by VCC voltage drop	V_{BATTSW}	2.70	-	-	V	
VCC-off period for starting power supply switching	$t_{VOFFBATT}$	200	-	-	μs	

Note: The VCC-off period for starting power supply switching indicates the period in which VCC is below the minimum value of the voltage level for switching to battery backup ($V_{DETBATT}$).

Note 1. Low CL crystal cannot be used below VBATT = 1.8 V.

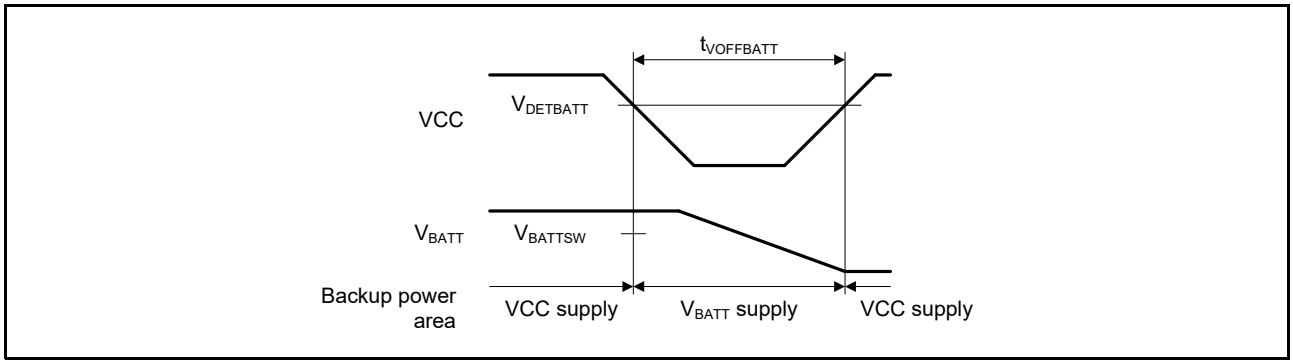

Figure 2.70 Battery backup function characteristics

2.11 CTSU Characteristics

Table 2.42 CTSU characteristics

Parameter	Symbol	Min	Typ	Max	Unit	Test conditions
External capacitance connected to TSCAP pin	C_{tscap}	9	10	11	nF	-
TS pin capacitive load	C_{base}	-	-	50	pF	-
Permissible output high current	Σ_{IoH}	-	-	-40	mA	When the mutual capacitance method is applied

2.12 ACMPHS Characteristics

Table 2.43 ACMPHS characteristics

Parameter	Symbol	Min	Typ	Max	Unit	Test conditions
Reference voltage range	VREF	0	-	AVCC0	V	-
Input voltage range	VI	0	-	AVCC0	V	-
Output delay*1	Td	-	50	100	ns	VI = VREF ± 100 mV
Internal reference voltage	Vref	1.13	1.18	1.23	V	-

Note 1. This value is the internal propagation delay.

2.13 PGA Characteristics

Table 2.44 PGA characteristics in single mode

Parameter	Symbol	Min	Typ	Max	Unit
PGAVSS input voltage range	PGAVSS	0	-	0	V
	AIN0 (G = 2.000)	0.050 × AVCC0	-	0.45 × AVCC0	V
	AIN1 (G = 2.500)	0.047 × AVCC0	-	0.360 × AVCC0	V
	AIN2 (G = 2.667)	0.046 × AVCC0	-	0.337 × AVCC0	V
	AIN3 (G = 2.857)	0.046 × AVCC0	-	0.32 × AVCC0	V
	AIN4 (G = 3.077)	0.045 × AVCC0	-	0.292 × AVCC0	V
	AIN5 (G = 3.333)	0.044 × AVCC0	-	0.265 × AVCC0	V
	AIN6 (G = 3.636)	0.042 × AVCC0	-	0.247 × AVCC0	V
	AIN7 (G = 4.000)	0.040 × AVCC0	-	0.212 × AVCC0	V
	AIN8 (G = 4.444)	0.036 × AVCC0	-	0.191 × AVCC0	V
	AIN9 (G = 5.000)	0.033 × AVCC0	-	0.17 × AVCC0	V
	AIN10 (G = 5.714)	0.031 × AVCC0	-	0.148 × AVCC0	V
	AIN11 (G = 6.667)	0.029 × AVCC0	-	0.127 × AVCC0	V
	AIN12 (G = 8.000)	0.027 × AVCC0	-	0.09 × AVCC0	V
	AIN13 (G = 10.000)	0.025 × AVCC0	-	0.08 × AVCC0	V
	AIN14 (G = 13.333)	0.023 × AVCC0	-	0.06 × AVCC0	V
Gain error	Gerr0 (G = 2.000)	-1.0	-	1.0	%
	Gerr1 (G = 2.500)	-1.0	-	1.0	%
	Gerr2 (G = 2.667)	-1.0	-	1.0	%
	Gerr3 (G = 2.857)	-1.0	-	1.0	%
	Gerr4 (G = 3.077)	-1.0	-	1.0	%
	Gerr5 (G = 3.333)	-1.5	-	1.5	%
	Gerr6 (G = 3.636)	-1.5	-	1.5	%
	Gerr7 (G = 4.000)	-1.5	-	1.5	%
	Gerr8 (G = 4.444)	-2.0	-	2.0	%
	Gerr9 (G = 5.000)	-2.0	-	2.0	%
	Gerr10 (G = 5.714)	-2.0	-	2.0	%
	Gerr11 (G = 6.667)	-2.0	-	2.0	%
	Gerr12 (G = 8.000)	-2.0	-	2.0	%
	Gerr13 (G = 10.000)	-2.0	-	2.0	%
	Gerr14 (G = 13.333)	-2.0	-	2.0	%
Offset error	Voff	-8	-	8	mV

Table 2.45 PGA characteristics in differential mode (1 of 2)

Parameter		Symbol	Min	Typ	Max	Unit
PGAVSS input voltage range		PGAVSS	-0.5	-	0.3	V
Differential input voltage range	G = 1.500	AIN-PGAVSS	-0.5	-	0.5	V
	G = 2.333		-0.4	-	0.4	V
	G = 4.000		-0.2	-	0.2	V
	G = 5.667		-0.15	-	0.15	V

Table 2.45 PGA characteristics in differential mode (2 of 2)

Parameter		Symbol	Min	Typ	Max	Unit
Gain error	G = 1.500	Gerr	-1.0	-	1.0	%
	G = 2.333		-1.0	-	1.0	
	G = 4.000		-1.0	-	1.0	
	G = 5.667		-1.0	-	1.0	

2.14 Flash Memory Characteristics

2.14.1 Code Flash Memory Characteristics

Table 2.46 Code flash memory characteristics

Conditions: Program or erase: FCLK = 4 to 60 MHz

Read: FCLK ≤ 60 MHz

Parameter		Symbol	FCLK = 4 MHz			20 MHz ≤ FCLK ≤ 60 MHz			Unit	Test conditions
			Min	Typ	Max	Min	Typ	Max		
Programming time N_{PEC} ≤ 100 times	128-byte	t_{P128}	-	0.75	13.2	-	0.34	6.0	ms	
	8-KB	t_{P8K}	-	49	176	-	22	80	ms	
	32-KB	t_{P32K}	-	194	704	-	88	320	ms	
Programming time N_{PEC} > 100 times	128-byte	t_{P128}	-	0.91	15.8	-	0.41	7.2	ms	
	8-KB	t_{P8K}	-	60	212	-	27	96	ms	
	32-KB	t_{P32K}	-	234	848	-	106	384	ms	
Erasure time N_{PEC} ≤ 100 times	8-KB	t_{E8K}	-	78	216	-	43	120	ms	
	32-KB	t_{E32K}	-	283	864	-	157	480	ms	
Erasure time N_{PEC} > 100 times	8-KB	t_{E8K}	-	94	260	-	52	144	ms	
	32-KB	t_{E32K}	-	341	1040	-	189	576	ms	
Reprogramming/erasure cycle*4		N_{PEC}	10000*1	-	-	10000*1	-	-	Times	
Suspend delay during programming		t_{SPD}	-	-	264	-	-	120	μs	
First suspend delay during erasure in suspend priority mode		t_{SESD1}	-	-	216	-	-	120	μs	
Second suspend delay during erasure in suspend priority mode		t_{SESD2}	-	-	1.7	-	-	1.7	ms	
Suspend delay during erasure in erasure priority mode		t_{SEED}	-	-	1.7	-	-	1.7	ms	
Forced stop command		t_{FD}	-	-	32	-	-	20	μs	
Data hold time*2		t_{DRP}	10*2, *3	-	-	10*2, *3	-	-	Years	
			30*2, *3	-	-	30*2, *3	-	-		Ta = +85°C

Note 1. This is the minimum number of times to guarantee all the characteristics after reprogramming. The guaranteed range is from 1 to the minimum value.

Note 2. This indicates the minimum value of the characteristic when reprogramming is performed within the specified range.

Note 3. This result is obtained from reliability testing.

Note 4. The reprogram/erase cycle is the number of erasures for each block. When the reprogram/erase cycle is n times (n = 10000), erasing can be performed n times for each block. For example, when 128-byte programming is performed 64 times for different addresses in 8-KB blocks, and then the entire block is erased, the reprogram/erase cycle is counted as one. However, programming the same address several times as one erasure is not enabled. Overwriting is prohibited.

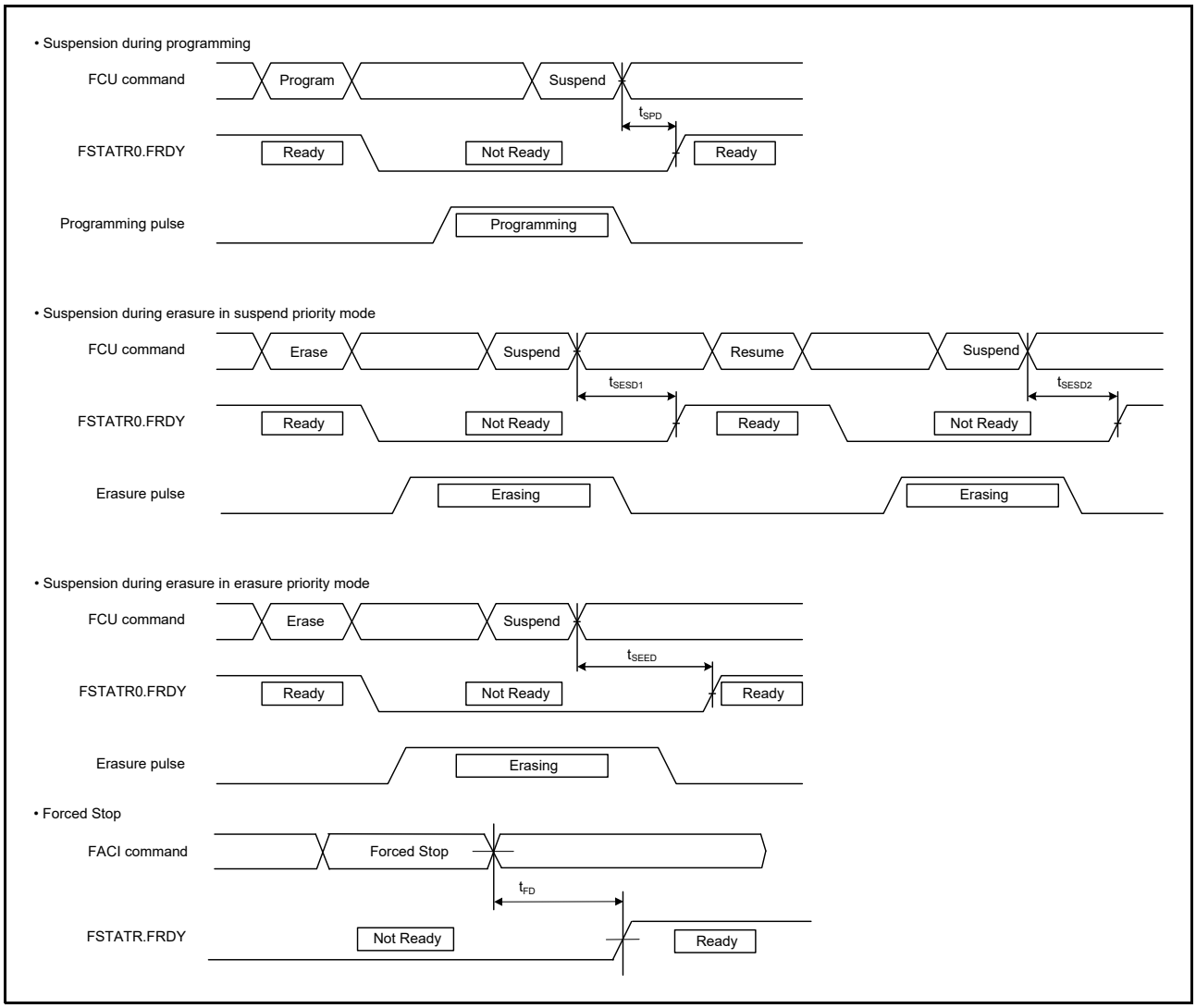

Figure 2.71 Suspension and forced stop timing for flash memory programming and erasure

2.14.2 Data Flash Memory Characteristics

Table 2.47 Data flash memory characteristics
Conditions: Program or erase: FCLK = 4 to 60 MHz
Read: FCLK ≤ 60 MHz

Parameter		Symbol	FCLK = 4 MHz			20 MHz ≤ FCLK ≤ 60 MHz			Unit	Test conditions
			Min	Typ	Max	Min	Typ	Max		
Programming time	4-byte	t_{DP4}	-	0.36	3.8	-	0.16	1.7	ms	
	8-byte	t_{DP8}	-	0.38	4.0	-	0.17	1.8		
	16-byte	t_{DP16}	-	0.42	4.5	-	0.19	2.0		
Erasure time	64-byte	t_{DE64}	-	3.1	18	-	1.7	10	ms	
	128-byte	t_{DE128}	-	4.7	27	-	2.6	15		
	256-byte	t_{DE256}	-	8.9	50	-	4.9	28		
Blank check time	4-byte	t_{DBC4}	-	-	84	-	-	30	μs	
Reprogramming/erasure cycle*1		N_{DPEC}	125000*2	-	-	125000*2	-	-	-	
Suspend delay during programming	4-byte	t_{DSPD}	-	-	264	-	-	120	μs	
	8-byte		-	-	264	-	-	120		
	16-byte		-	-	264	-	-	120		
First suspend delay during erasure in suspend priority mode	64-byte	t_{DSESD1}	-	-	216	-	-	120	μs	
	128-byte		-	-	216	-	-	120		
	256-byte		-	-	216	-	-	120		
Second suspend delay during erasure in suspend priority mode	64-byte	t_{DSESD2}	-	-	300	-	-	300	μs	
	128-byte		-	-	390	-	-	390		
	256-byte		-	-	570	-	-	570		
Suspend delay during erasing in erasure priority mode	64-byte	t_{DSEED}	-	-	300	-	-	300	μs	
	128-byte		-	-	390	-	-	390		
	256-byte		-	-	570	-	-	570		
Forced stop command		t_{FD}	-	-	32	-	-	20	μs	
Data hold time*3		t_{DRP}	10*3,*4	-	-	10*3,*4	-	-	Year	
			30*3,*4	-	-	30*3,*4	-	-		Ta = +85°C

Note 1. The reprogram/erase cycle is the number of erasures for each block. When the reprogram/erase cycle is n times (n = 125000), erasing can be performed n times for each block. For example, when 4-byte programming is performed 16 times for different addresses in 64-byte blocks, and then the entire block is erased, the reprogram/erase cycle is counted as one. However, programming the same address several times as one erasure is not enabled. Overwriting is prohibited.
Note 2. This is the minimum number of times to guarantee all the characteristics after reprogramming. The guaranteed range is from 1 to the minimum value.
Note 3. This indicates the minimum value of the characteristic when reprogramming is performed within the specified range.
Note 4. This result is obtained from reliability testing.

2.15 Boundary Scan

Table 2.48 Boundary scan characteristics (1 of 2)

Parameter	Symbol	Min	Typ	Max	Unit	Test conditions
TCK clock cycle time	t_{TCKcyc}	100	-	-	ns	Figure 2.72
TCK clock high pulse width	t_{TCKH}	45	-	-	ns	
TCK clock low pulse width	t_{TCKL}	45	-	-	ns	
TCK clock rise time	t_{TCKr}	-	-	5	ns	
TCK clock fall time	t_{TCKf}	-	-	5	ns	

Table 2.48 Boundary scan characteristics (2 of 2)

Parameter	Symbol	Min	Typ	Max	Unit	Test conditions
TMS setup time	t_{TMSS}	20	-	-	ns	Figure 2.73
TMS hold time	t_{TMSH}	20	-	-	ns	
TDI setup time	t_{TDIS}	20	-	-	ns	
TDI hold time	t_{TDIH}	20	-	-	ns	
TDO data delay	t_{TDOD}	-	-	40	ns	
Boundary scan circuit startup time*1	T_{BSSTUP}	t_{RESWP}	-	-	-	Figure 2.74

Note 1. Boundary scan does not function until the power-on reset becomes negative.

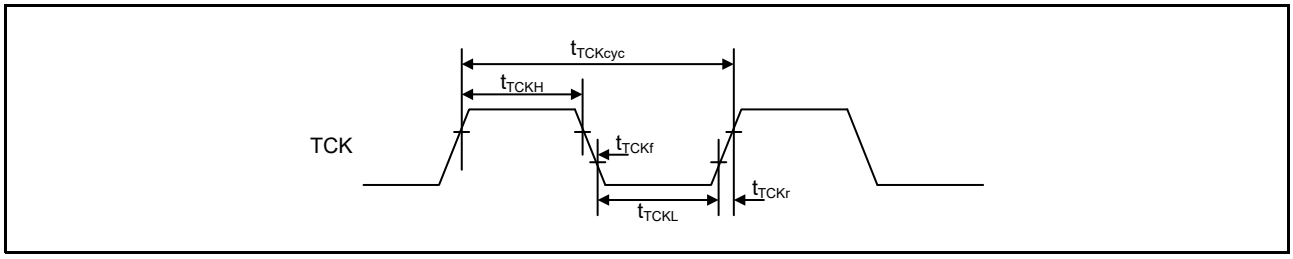

Figure 2.72 Boundary scan TCK timing

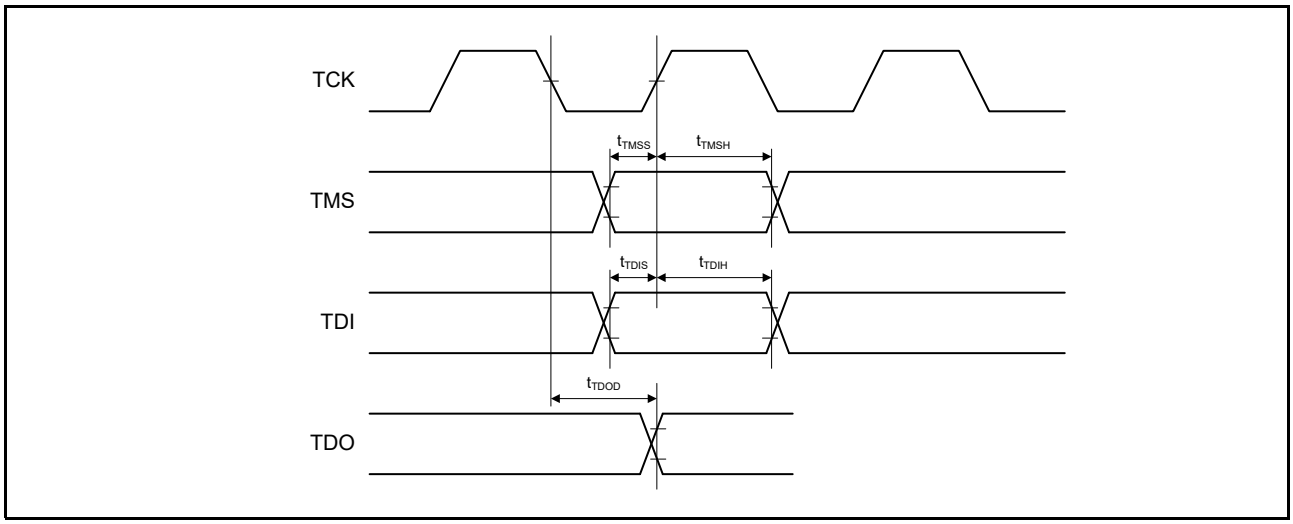

Figure 2.73 Boundary scan input/output timing

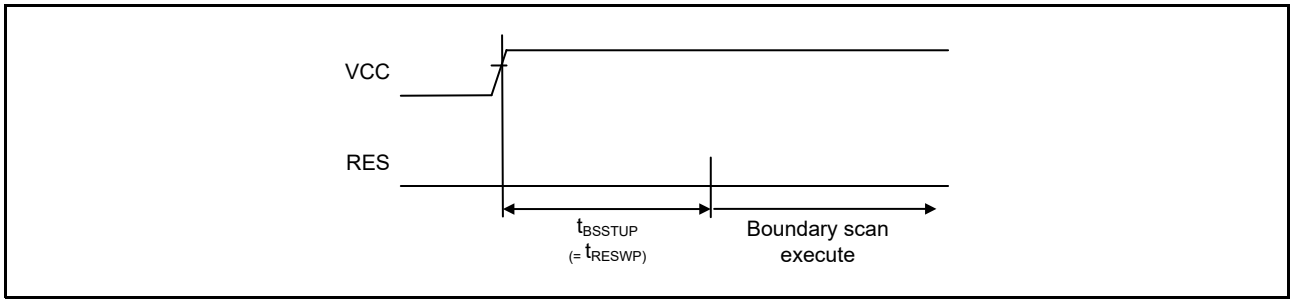

Figure 2.74 Boundary scan circuit startup timing

2.16 Joint Test Action Group (JTAG)

Table 2.49 JTAG

Parameter	Symbol	Min	Typ	Max	Unit	Test conditions
TCK clock cycle time	t_{TCKcyc}	40	-	-	ns	Figure 2.72
TCK clock high pulse width	t_{TCKH}	15	-	-	ns	
TCK clock low pulse width	t_{TCKL}	15	-	-	ns	
TCK clock rise time	t_{TCKr}	-	-	5	ns	
TCK clock fall time	t_{TCKf}	-	-	5	ns	
TMS setup time	t_{TMSS}	8	-	-	ns	Figure 2.73
TMS hold time	t_{TMSH}	8	-	-	ns	
TDI setup time	t_{TDIS}	8	-	-	ns	
TDI hold time	t_{TDIH}	8	-	-	ns	
TDO data delay time	t_{TDOD}	-	-	20	ns	

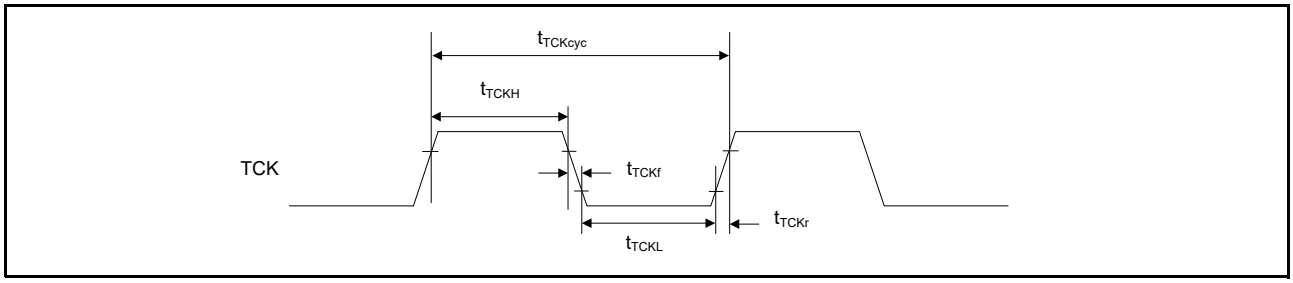

Figure 2.75 JTAG TCK timing

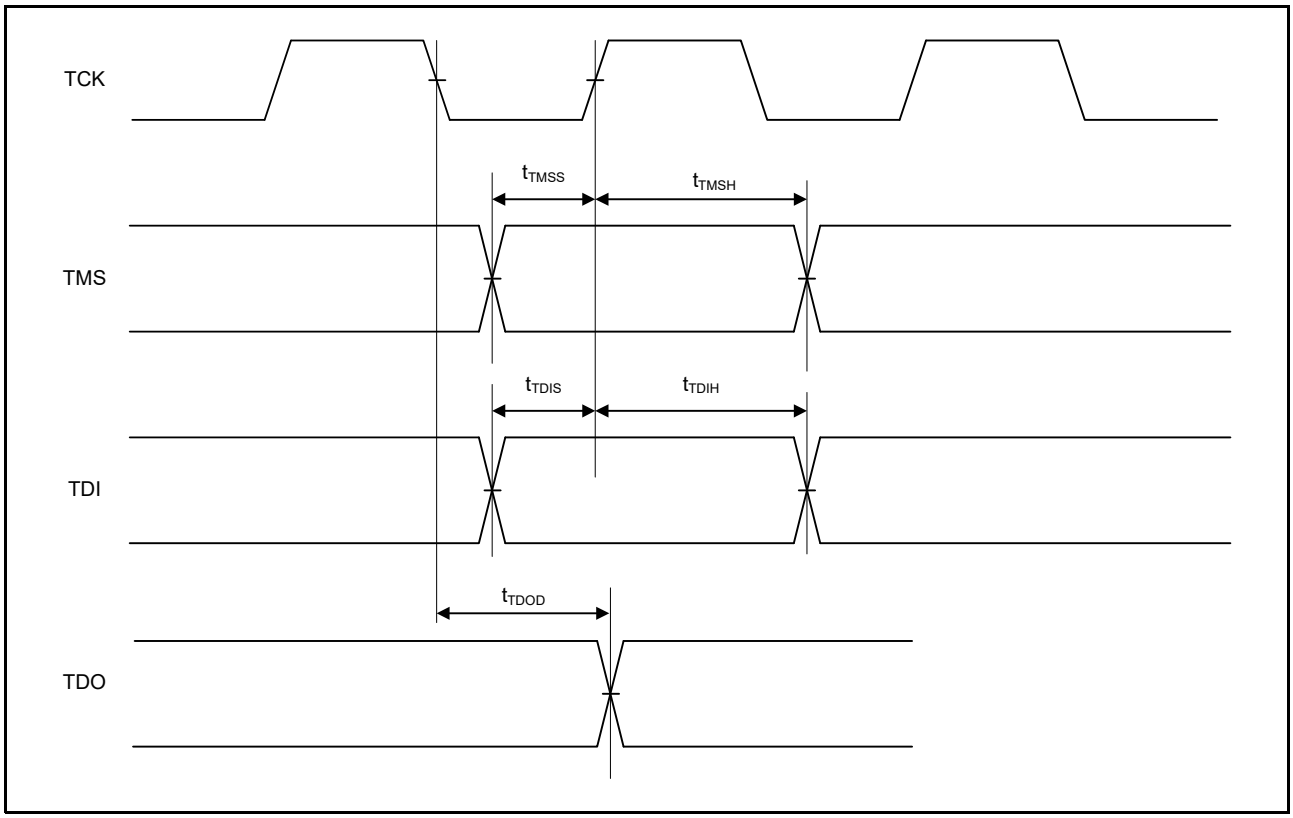

Figure 2.76 JTAG input/output timing

2.17 Serial Wire Debug (SWD)

Table 2.50 SWD

Parameter	Symbol	Min	Typ	Max	Unit	Test conditions
SWCLK clock cycle time	$t_{SWCKcyc}$	40	-	-	ns	Figure 2.77
SWCLK clock high pulse width	t_{SWCKH}	15	-	-	ns	
SWCLK clock low pulse width	t_{SWCKL}	15	-	-	ns	
SWCLK clock rise time	t_{SWCKr}	-	-	5	ns	
SWCLK clock fall time	t_{SWCKf}	-	-	5	ns	
SWDIO setup time	t_{SWDS}	8	-	-	ns	Figure 2.78
SWDIO hold time	t_{SWDH}	8	-	-	ns	
SWDIO data delay time	t_{SWDD}	2	-	28	ns	

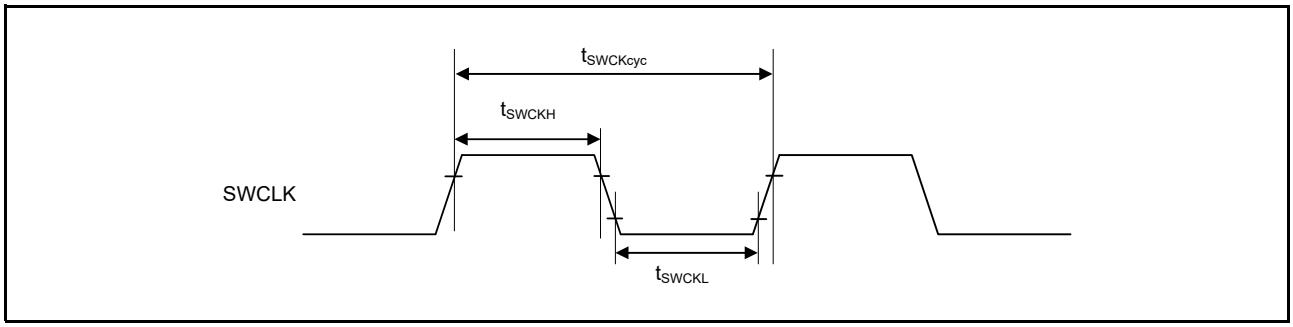

Figure 2.77 SWD SWCLK timing

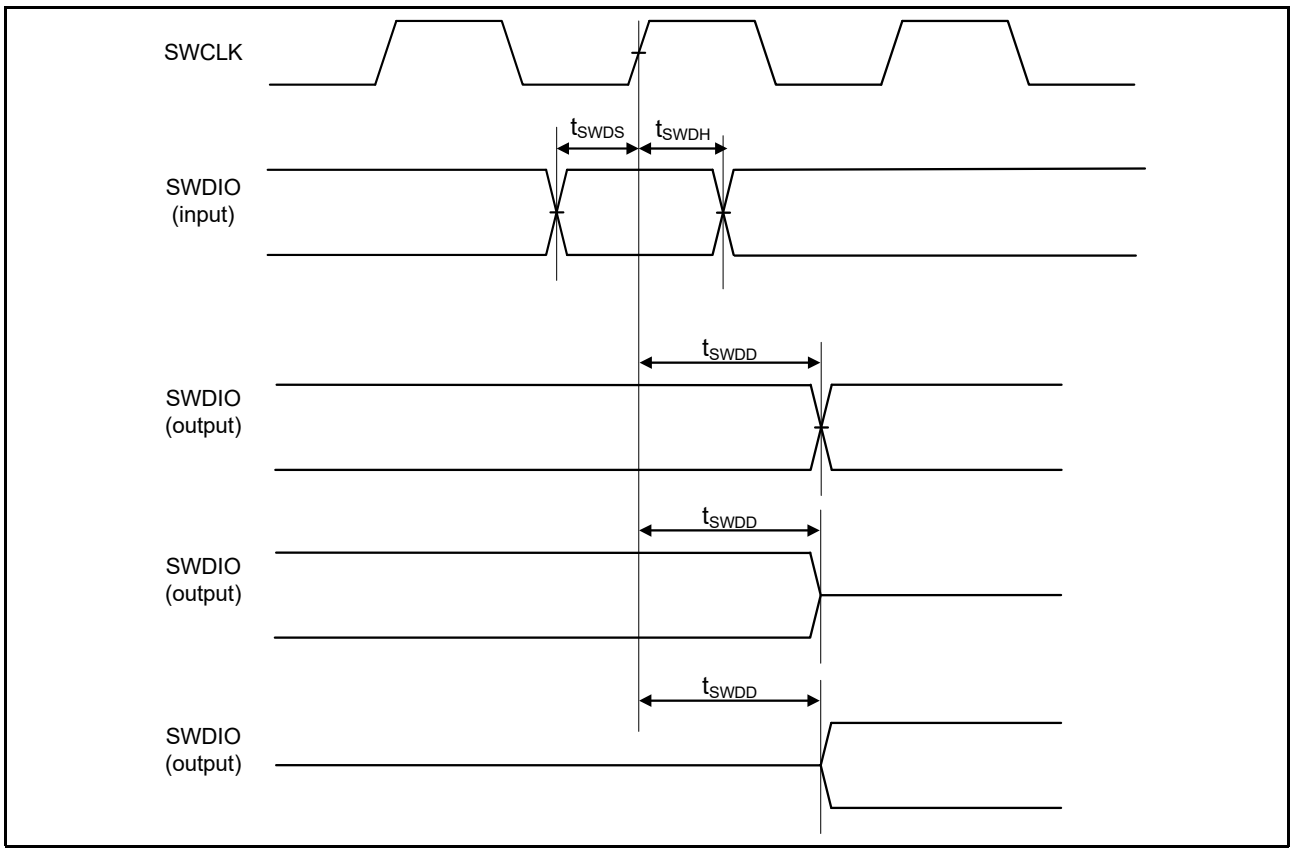

Figure 2.78 SWD input/output timing

2.18 Embedded Trace Macro Interface (ETM)

Table 2.51 ETM
Conditions: High drive output is selected in the Port Drive Capability bit in the PmnPFS register.

Parameter	Symbol	Min	Typ	Max	Unit	Test conditions
TCLK clock cycle time	$t_{TCLKcyc}$	33.3	-	-	ns	Figure 2.79
TCLK clock high pulse width	t_{TCLKH}	13.6	-	-	ns	
TCLK clock low pulse width	t_{TCLKL}	13.6	-	-	ns	
TCLK clock rise time	t_{TCLKr}	-	-	3	ns	
TCLK clock fall time	t_{TCLKf}	-	-	3	ns	
TDATA[3:0] output setup time	t_{TRDS}	3.5	-	-	ns	Figure 2.80
TDATA[3:0] output hold time	t_{TRDH}	2.5	-	-	ns	

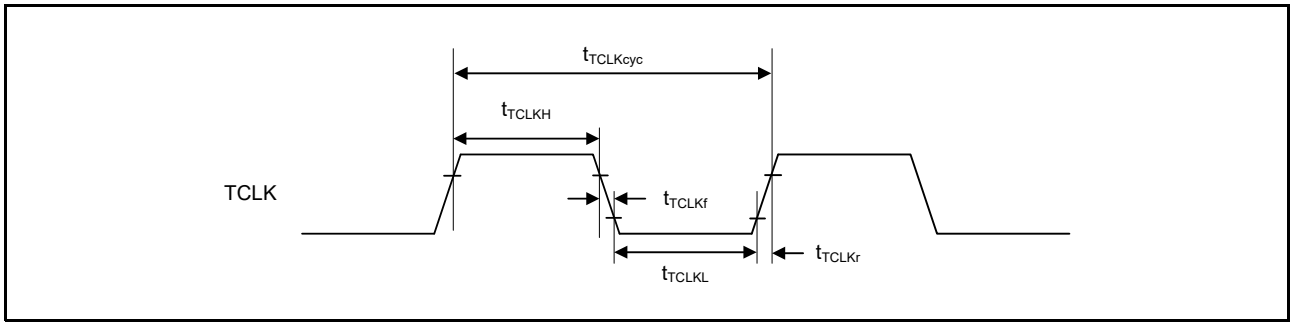

Figure 2.79 ETM TCLK timing

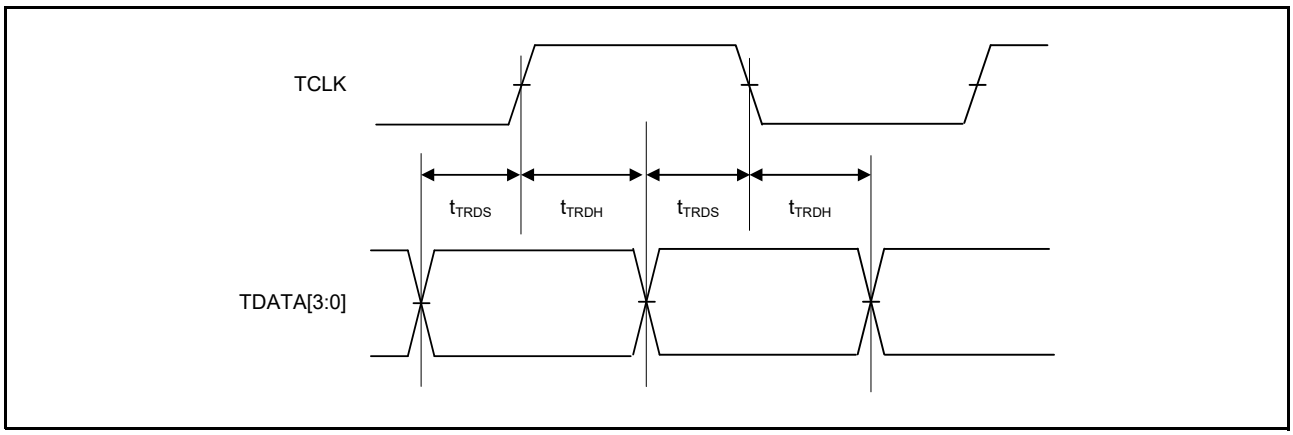

Figure 2.80 ETM output timing

Appendix 1.Package Dimensions

Information on the latest version of the package dimensions or mountings is shown in “Packages” on the Renesas Electronics Corporation website.

JEITA Package Code	RENESAS Code	Previous Code	MASS[Typ.]
P-TFLGA100-7x7-0.65	PTLG0100JA-A	100F0G	0.1g

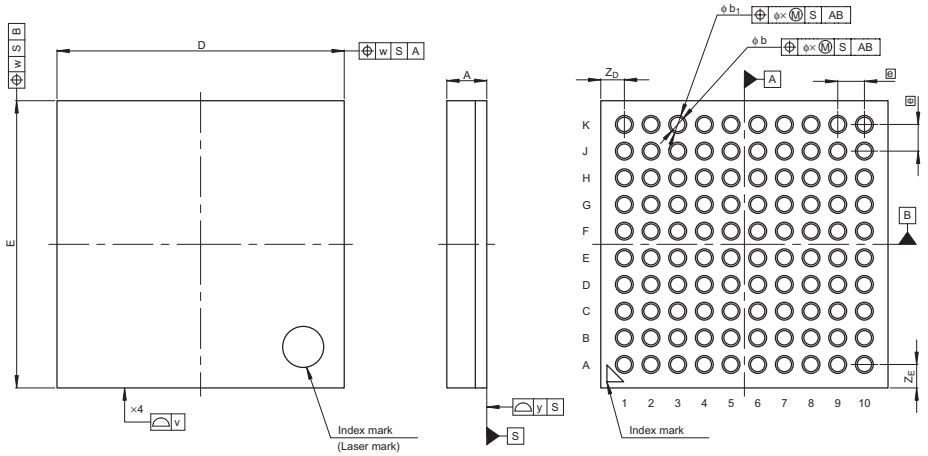

Reference Symbol	Dimension in Millimeters		
	Min	Nom	Max
D	—	7.0	—
E	—	7.0	—
v	—	—	0.15
w	—	—	0.20
A	—	—	1.05
e	—	0.65	—
b	0.31	0.35	0.39
b_1	0.385	0.435	0.485
x	—	—	0.08
y	—	—	0.10
Z_D	—	0.575	—
Z_E	—	0.575	—

Figure 1.1 100-pin LGA

JEITA Package Code	RENESAS Code	Previous Code	MASS (Typ) [g]
P-LFQFP100-14x14-0.50	PLQP0100KB-B	—	0.6

Unit: mm

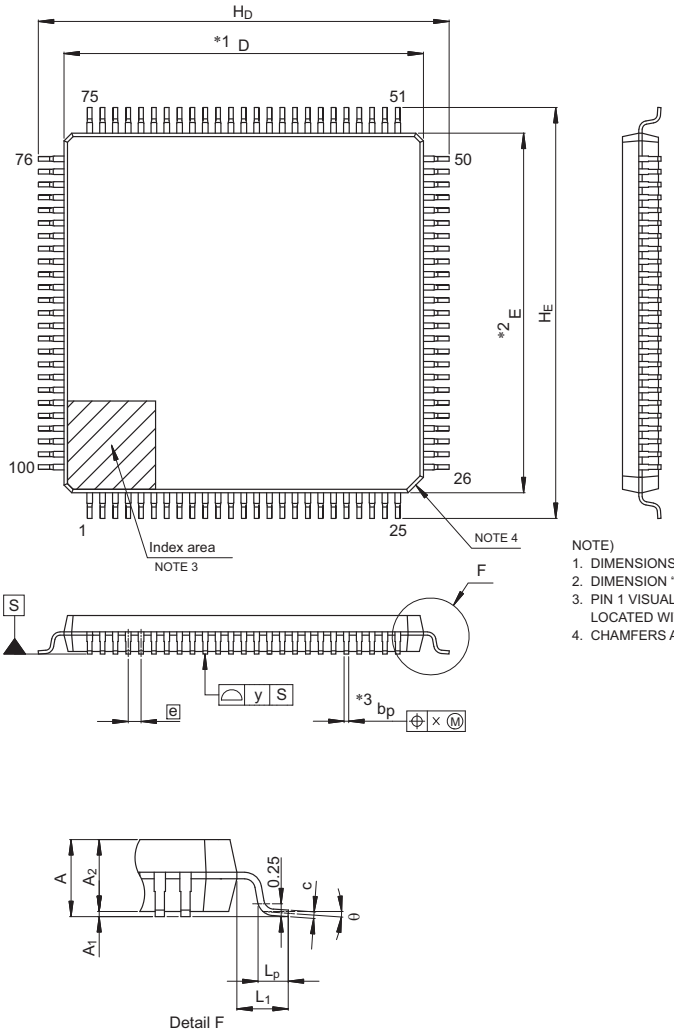

NOTE)
1. DIMENSIONS "*1" AND "*2" DO NOT INCLUDE MOLD FLASH.
2. DIMENSION "*3" DOES NOT INCLUDE TRIM OFFSET.
3. PIN 1 VISUAL INDEX FEATURE MAY VARY, BUT MUST BE LOCATED WITHIN THE HATCHED AREA.
4. CHAMFERS AT CORNERS ARE OPTIONAL, SIZE MAY VARY.

Reference Symbol	Dimensions in millimeters		
	Min	Nom	Max
D	13.9	14.0	14.1
E	13.9	14.0	14.1
A_2	—	1.4	—
H_D	15.8	16.0	16.2
H_E	15.8	16.0	16.2
A	—	—	1.7
A_1	0.05	—	0.15
b_p	0.15	0.20	0.27
c	0.09	—	0.20
θ	0°	3.5°	8°
e	—	0.5	—
x	—	—	0.08
y	—	—	0.08
L_p	0.45	0.6	0.75
L_1	—	1.0	—

© 2015 Renesas Electronics Corporation. All rights reserved.

Figure 1.2 100-pin LQFP

JEITA Package Code	RENESAS Code	Previous Code	MASS (Typ) [g]
P-LFQFP64-10x10-0.50	PLQP0064KB-C	—	0.3

Unit: mm

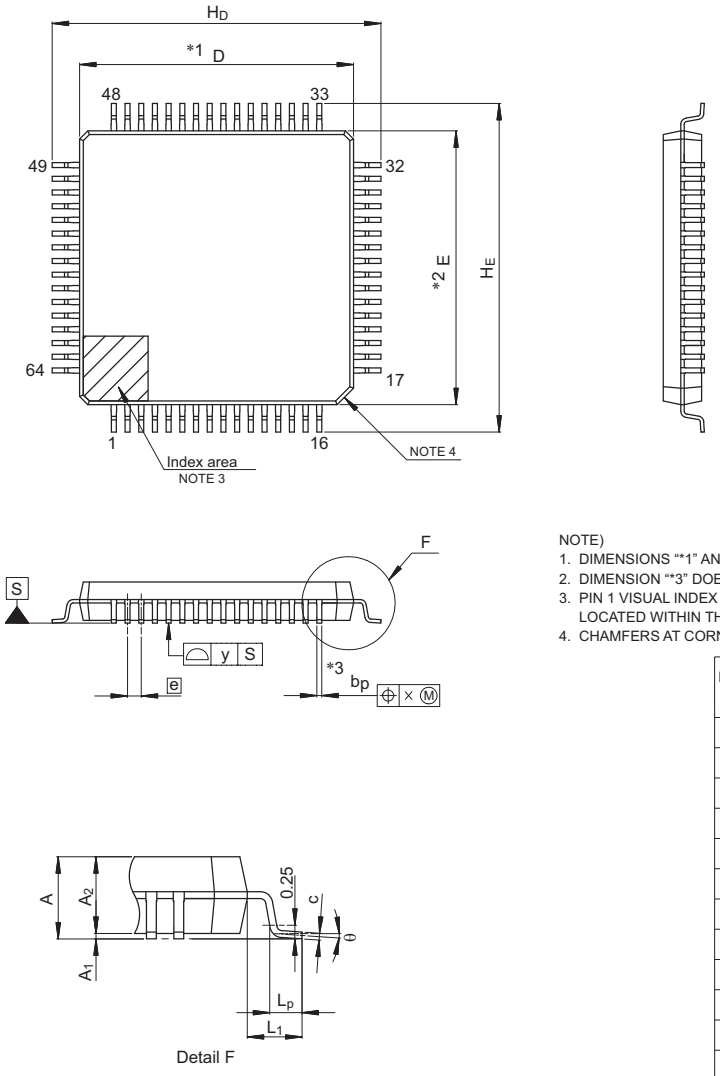

NOTE)
1. DIMENSIONS "*1" AND "*2" DO NOT INCLUDE MOLD FLASH.
2. DIMENSION "*3" DOES NOT INCLUDE TRIM OFFSET.
3. PIN 1 VISUAL INDEX FEATURE MAY VARY, BUT MUST BE LOCATED WITHIN THE HATCHED AREA.
4. CHAMFERS AT CORNERS ARE OPTIONAL, SIZE MAY VARY.

Reference Symbol	Dimensions in millimeters		
	Min	Nom	Max
D	9.9	10.0	10.1
E	9.9	10.0	10.1
A_2	—	1.4	—
H_D	11.8	12.0	12.2
H_E	11.8	12.0	12.2
A	—	—	1.7
A_1	0.05	—	0.15
b_p	0.15	0.20	0.27
c	0.09	—	0.20
θ	0°	3.5°	8°
e	—	0.5	—
x	—	—	0.08
y	—	—	0.08
L_p	0.45	0.6	0.75
L_1	—	1.0	—

© 2015 Renesas Electronics Corporation. All rights reserved.

Figure 1.3 64-pin LQFP

JEITA Package code	RENESAS code	Previous code	MASS(TYP.)[g]
P-HWQFN64-8x8-0.40	PWQN0064LA-A	P64K8-40-9B5-3	0.16

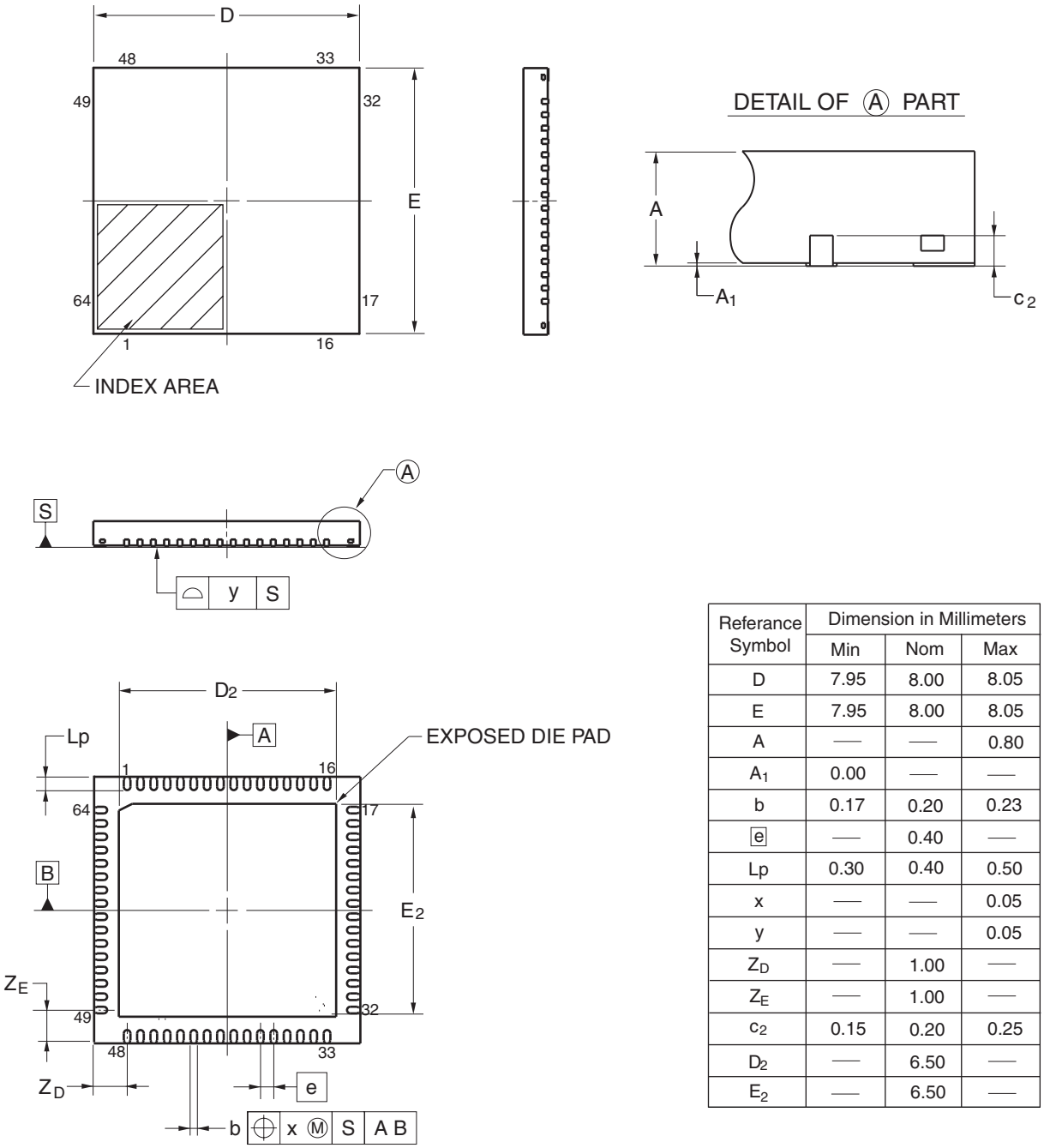

Referance Symbol	Dimension in Millimeters		
	Min	Nom	Max
D	7.95	8.00	8.05
E	7.95	8.00	8.05
A	—	—	0.80
A_1	0.00	—	—
b	0.17	0.20	0.23
e	—	0.40	—
Lp	0.30	0.40	0.50
x	—	—	0.05
y	—	—	0.05
Z_D	—	1.00	—
Z_E	—	1.00	—
c_2	0.15	0.20	0.25
D_2	—	6.50	—
E_2	—	6.50	—

©2013 Renesas Electronics Corporation. All rights reserved.

Figure 1.4 64-pin QFN

Revision History	RA6M1 Group Datasheet

Rev.	Date	Chapter	Summary
1.00	Oct 8, 2019	-	First Edition issued
1.10	Dec 17, 2021	-	Second Edition issued
1.20	Dec 2, 2022	-	Third Edition issued

Proprietary Notice

All text, graphics, photographs, trademarks, logos, artwork and computer code, collectively known as content, contained in this document is owned, controlled or licensed by or to Renesas, and is protected by trade dress, copyright, patent and trademark laws, and other intellectual property rights and unfair competition laws. Except as expressly provided herein, no part of this document or content may be copied, reproduced, republished, posted, publicly displayed, encoded, translated, transmitted or distributed in any other medium for publication or distribution or for any commercial enterprise, without prior written consent from Renesas.

Arm® and Cortex® are registered trademarks of Arm Limited. CoreSight™ is a trademark of Arm Limited.

CoreMark® is a registered trademark of the Embedded Microprocessor Benchmark Consortium.

Magic Packet™ is a trademark of Advanced Micro Devices, Inc.

SuperFlash® is a registered trademark of Silicon Storage Technology, Inc. in several countries including the United States and Japan.

Other brands and names mentioned in this document may be the trademarks or registered trademarks of their respective holders.

RA6M1 Group Datasheet

Publication Date: Rev.1.20 Dec 2, 2022

Published by: Renesas Electronics Corporation

General Precautions in the Handling of Microprocessing Unit and Microcontroller Unit Products

The following usage notes are applicable to all Microprocessing unit and Microcontroller unit products from Renesas. For detailed usage notes on the products covered by this document, refer to the relevant sections of the document as well as any technical updates that have been issued for the products.

1. Precaution against Electrostatic Discharge (ESD)
   A strong electrical field, when exposed to a CMOS device, can cause destruction of the gate oxide and ultimately degrade the device operation. Steps must be taken to stop the generation of static electricity as much as possible, and quickly dissipate it when it occurs. Environmental control must be adequate. When it is dry, a humidifier should be used. This is recommended to avoid using insulators that can easily build up static electricity. Semiconductor devices must be stored and transported in an anti-static container, static shielding bag or conductive material. All test and measurement tools including work benches and floors must be grounded. The operator must also be grounded using a wrist strap. Semiconductor devices must not be touched with bare hands. Similar precautions must be taken for printed circuit boards with mounted semiconductor devices.
2. Processing at power-on
   The state of the product is undefined at the time when power is supplied. The states of internal circuits in the LSI are indeterminate and the states of register settings and pins are undefined at the time when power is supplied. In a finished product where the reset signal is applied to the external reset pin, the states of pins are not guaranteed from the time when power is supplied until the reset process is completed. In a similar way, the states of pins in a product that is reset by an on-chip power-on reset function are not guaranteed from the time when power is supplied until the power reaches the level at which resetting is specified.
3. Input of signal during power-off state
   Do not input signals or an I/O pull-up power supply while the device is powered off. The current injection that results from input of such a signal or I/O pull-up power supply may cause malfunction and the abnormal current that passes in the device at this time may cause degradation of internal elements. Follow the guideline for input signal during power-off state as described in your product documentation.
4. Handling of unused pins
   Handle unused pins in accordance with the directions given under handling of unused pins in the manual. The input pins of CMOS products are generally in the high-impedance state. In operation with an unused pin in the open-circuit state, extra electromagnetic noise is induced in the vicinity of the LSI, an associated shoot-through current flows internally, and malfunctions occur due to the false recognition of the pin state as an input signal become possible.
5. Clock signals
   After applying a reset, only release the reset line after the operating clock signal becomes stable. When switching the clock signal during program execution, wait until the target clock signal is stabilized. When the clock signal is generated with an external resonator or from an external oscillator during a reset, ensure that the reset line is only released after full stabilization of the clock signal. Additionally, when switching to a clock signal produced with an external resonator or by an external oscillator while program execution is in progress, wait until the target clock signal is stable.
6. Voltage application waveform at input pin
   Waveform distortion due to input noise or a reflected wave may cause malfunction. If the input of the CMOS device stays in the area between V_{IL} (Max.) and V_{IH} (Min.) due to noise, for example, the device may malfunction. Take care to prevent chattering noise from entering the device when the input level is fixed, and also in the transition period when the input level passes through the area between V_{IL} (Max.) and V_{IH} (Min.).
7. Prohibition of access to reserved addresses
   Access to reserved addresses is prohibited. The reserved addresses are provided for possible future expansion of functions. Do not access these addresses as the correct operation of the LSI is not guaranteed.
8. Differences between products
   Before changing from one product to another, for example to a product with a different part number, confirm that the change will not lead to problems. The characteristics of a microprocessing unit or microcontroller unit products in the same group but having a different part number might differ in terms of internal memory capacity, layout pattern, and other factors, which can affect the ranges of electrical characteristics, such as characteristic values, operating margins, immunity to noise, and amount of radiated noise. When changing to a product with a different part number, implement a system-evaluation test for the given product.

Notice

1. Descriptions of circuits, software and other related information in this document are provided only to illustrate the operation of semiconductor products and application examples. You are fully responsible for the incorporation or any other use of the circuits, software, and information in the design of your product or system. Renesas Electronics disclaims any and all liability for any losses and damages incurred by you or third parties arising from the use of these circuits, software, or information.
2. Renesas Electronics hereby expressly disclaims any warranties against and liability for infringement or any other claims involving patents, copyrights, or other intellectual property rights of third parties, by or arising from the use of Renesas Electronics products or technical information described in this document, including but not limited to, the product data, drawings, charts, programs, algorithms, and application examples.
3. No license, express, implied or otherwise, is granted hereby under any patents, copyrights or other intellectual property rights of Renesas Electronics or others.
4. You shall be responsible for determining what licenses are required from any third parties, and obtaining such licenses for the lawful import, export, manufacture, sales, utilization, distribution or other disposal of any products incorporating Renesas Electronics products, if required.
5. You shall not alter, modify, copy, or reverse engineer any Renesas Electronics product, whether in whole or in part. Renesas Electronics disclaims any and all liability for any losses or damages incurred by you or third parties arising from such alteration, modification, copying or reverse engineering.
6. Renesas Electronics products are classified according to the following two quality grades: “Standard” and “High Quality”. The intended applications for each Renesas Electronics product depends on the product’s quality grade, as indicated below.
   "Standard": Computers; office equipment; communications equipment; test and measurement equipment; audio and visual equipment; home electronic appliances; machine tools; personal electronic equipment; industrial robots; etc.
   "High Quality": Transportation equipment (automobiles, trains, ships, etc.); traffic control (traffic lights); large-scale communication equipment; key financial terminal systems; safety control equipment; etc.
   Unless expressly designated as a high reliability product or a product for harsh environments in a Renesas Electronics data sheet or other Renesas Electronics document, Renesas Electronics products are not intended or authorized for use in products or systems that may pose a direct threat to human life or bodily injury (artificial life support devices or systems; surgical implantations; etc.), or may cause serious property damage (space system; undersea repeaters; nuclear power control systems; aircraft control systems; key plant systems; military equipment; etc.). Renesas Electronics disclaims any and all liability for any damages or losses incurred by you or any third parties arising from the use of any Renesas Electronics product that is inconsistent with any Renesas Electronics data sheet, user’s manual or other Renesas Electronics document.
7. No semiconductor product is absolutely secure. Notwithstanding any security measures or features that may be implemented in Renesas Electronics hardware or software products, Renesas Electronics shall have absolutely no liability arising out of any vulnerability or security breach, including but not limited to any unauthorized access to or use of a Renesas Electronics product or a system that uses a Renesas Electronics product. RENESAS ELECTRONICS DOES NOT WARRANT OR GUARANTEE THAT RENESAS ELECTRONICS PRODUCTS, OR ANY SYSTEMS CREATED USING RENESAS ELECTRONICS PRODUCTS WILL BE INVULNERABLE OR FREE FROM CORRUPTION, ATTACK, VIRUSES, INTERFERENCE, HACKING, DATA LOSS OR THEFT, OR OTHER SECURITY INTRUSION (“Vulnerability Issues”). RENESAS ELECTRONICS DISCLAIMS ANY AND ALL RESPONSIBILITY OR LIABILITY ARISING FROM OR RELATED TO ANY VULNERABILITY ISSUES. FURTHERMORE, TO THE EXTENT PERMITTED BY APPLICABLE LAW, RENESAS ELECTRONICS DISCLAIMS ANY AND ALL WARRANTIES, EXPRESS OR IMPLIED, WITH RESPECT TO THIS DOCUMENT AND ANY RELATED OR ACCOMPANYING SOFTWARE OR HARDWARE, INCLUDING BUT NOT LIMITED TO THE IMPLIED WARRANTIES OF MERCHANTABILITY, OR FITNESS FOR A PARTICULAR PURPOSE.
8. When using Renesas Electronics products, refer to the latest product information (data sheets, user’s manuals, application notes, “General Notes for Handling and Using Semiconductor Devices” in the reliability handbook, etc.), and ensure that usage conditions are within the ranges specified by Renesas Electronics with respect to maximum ratings, operating power supply voltage range, heat dissipation characteristics, installation, etc. Renesas Electronics disclaims any and all liability for any malfunctions, failure or accident arising out of the use of Renesas Electronics products outside of such specified ranges.
9. Although Renesas Electronics endeavors to improve the quality and reliability of Renesas Electronics products, semiconductor products have specific characteristics, such as the occurrence of failure at a certain rate and malfunctions under certain use conditions. Unless designated as a high reliability product or a product for harsh environments in a Renesas Electronics data sheet or other Renesas Electronics document, Renesas Electronics products are not subject to radiation resistance design. You are responsible for implementing safety measures to guard against the possibility of bodily injury, injury or damage caused by fire, and/or danger to the public in the event of a failure or malfunction of Renesas Electronics products, such as safety design for hardware and software, including but not limited to redundancy, fire control and malfunction prevention, appropriate treatment for aging degradation or any other appropriate measures. Because the evaluation of microcomputer software alone is very difficult and impractical, you are responsible for evaluating the safety of the final products or systems manufactured by you.
10. Please contact a Renesas Electronics sales office for details as to environmental matters such as the environmental compatibility of each Renesas Electronics product. You are responsible for carefully and sufficiently investigating applicable laws and regulations that regulate the inclusion or use of controlled substances, including without limitation, the EU RoHS Directive, and using Renesas Electronics products in compliance with all these applicable laws and regulations. Renesas Electronics disclaims any and all liability for damages or losses occurring as a result of your noncompliance with applicable laws and regulations.
11. Renesas Electronics products and technologies shall not be used for or incorporated into any products or systems whose manufacture, use, or sale is prohibited under any applicable domestic or foreign laws or regulations. You shall comply with any applicable export control laws and regulations promulgated and administered by the governments of any countries asserting jurisdiction over the parties or transactions.
12. It is the responsibility of the buyer or distributor of Renesas Electronics products, or any other party who distributes, disposes of, or otherwise sells or transfers the product to a third party, to notify such third party in advance of the contents and conditions set forth in this document.
13. This document shall not be reprinted, reproduced or duplicated in any form, in whole or in part, without prior written consent of Renesas Electronics.
14. Please contact a Renesas Electronics sales office if you have any questions regarding the information contained in this document or Renesas Electronics products.

(Note1) “Renesas Electronics” as used in this document means Renesas Electronics Corporation and also includes its directly or indirectly controlled subsidiaries.
(Note2) “Renesas Electronics product(s)” means any product developed or manufactured by or for Renesas Electronics.

(Rev.5.0-1 October 2020)

Corporate Headquarters

TOYOSU FORESIA, 3-2-24 Toyosu,
Koto-ku, Tokyo 135-0061, Japan
www.renesas.com

Contact Information

For further information on a product, technology, the most up-to-date version of a document, or your nearest sales office, please visit:
www.renesas.com/contact/

Trademarks

Renesas and the Renesas logo are trademarks of Renesas Electronics Corporation. All trademarks and registered trademarks are the property of their respective owners.

© 2022 Renesas Electronics Corporation. All rights reserved.

RA6M1 Group

Renesas Electronics Corporation

R01DS0356EJ0120