SLG55566
SLG55566A

USB Host Charger Identification Analog Switches

General Description

The SLG55566/SLG55566A is a USB device that combines high speed USB switches with a USB host charger (dedicated charger) identification circuit. The device supports both the latest USB Battery Charging Specification Revision 1.2 including data contact detection and a set resistor bias for Apple compliant devices as well as legacy USB D+/D- short detection using data line pull-up.

Features

- High Speed USB Switching
- Low 4.0 pF (typ) On Capacitance
- Low 4.0 Ω (typ) On Resistance
- Low 0.5 Ω (typ) On Resistance Flatness
- 2.8 V to 5.5 V Supply Range
- Low 8 µA (typ) Supply Current
- Automatic Current-Limit Switch Control
- Automatic USB Charger Identification Circuit
- USB Battery Charging Specificatlon 1.2 compliant
- Pb-Free / RoHS Compliant
- Halogen-Free
- TDFN-8 Package

Pin Configuration - SLG55566

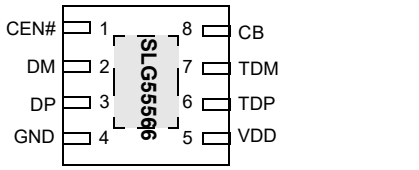

TDFN-8 (Top View)

Pin Configuration - SLG55566A

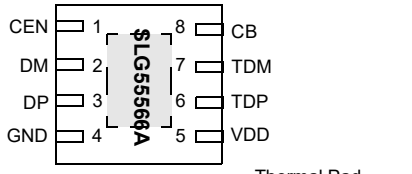

TDFN-8 (Top View)

Block Diagram

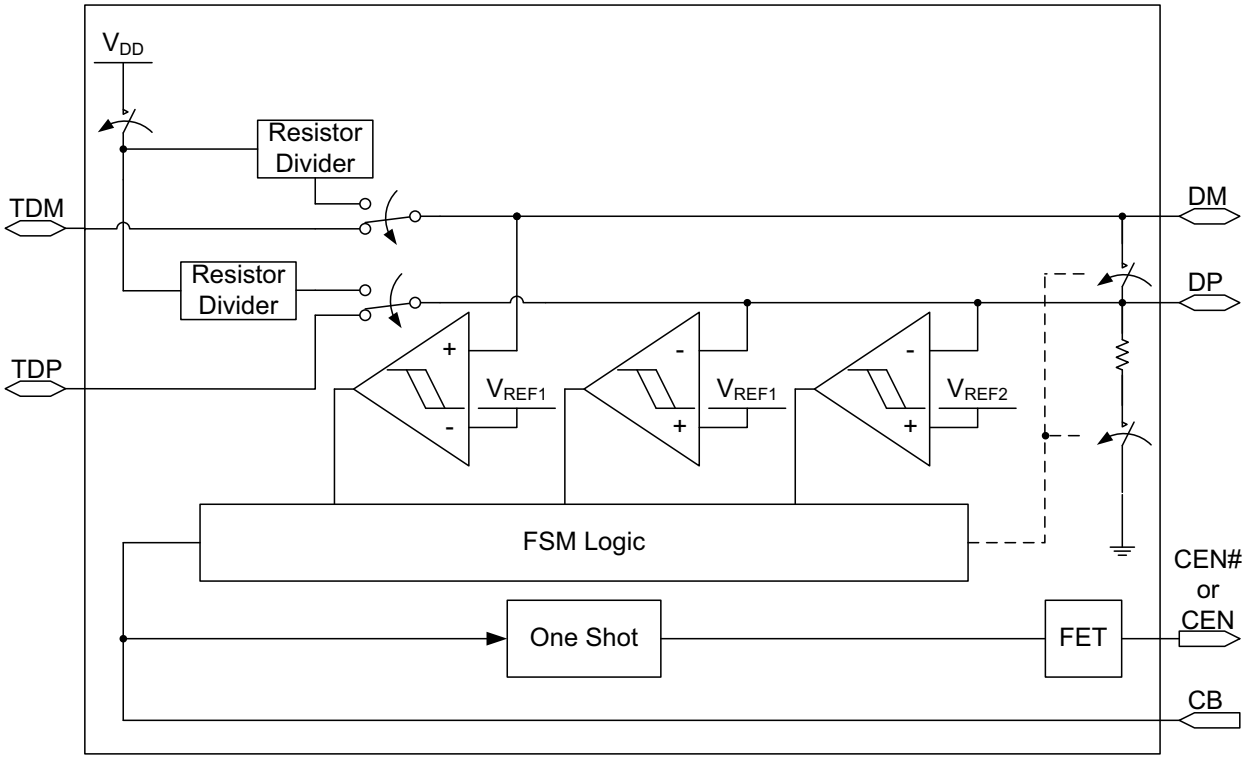

©2022 Renesas Electronics Corporation

Pin Description - SLG55566

Pin #	Name	Type	Description
1	CEN#	Output	P-FET Open Drain Output. Current Limit Switch (CLS) Control Output. CB changes from 0 to 1 or 1 to 0. CEN# will be high for 1 second (typ)
2	DM	Input/Output	USB Connector D-
3	DP	Input/Output	USB Connector D+
4	GND	GND	Ground
5	VDD	PWR	Power Supply. Connect a 0.1 µF capacitor between VDD and GND as close as possible to the device.
6	TDP	Input/Output	Host USB Transceiver D+ Connection
7	TDM	Input/Output	Host USB Transceiver D- Connection
8	CB	Input	Switch Control Bit 0 = autodetection charger identification active 1 = pass-through mode active, DP/DM connected to TDP/TDM
9	Thermal Pad	GND	Ground

Pin Description - SLG55566A

Pin #	Name	Type	Description
1	CEN	Output	N-FET Open Drain Output. Current Limit Switch (CLS) Control Output. CB changes from 0 to 1 or 1 to 0. CEN will be low for 1 second (typ)
2	DM	Input/Output	USB Connector D-
3	DP	Input/Output	USB Connector D+
4	GND	GND	Ground
5	VDD	PWR	Power Supply. Connect a 0.1 µF capacitor between VDD and GND as close as possible to the device.
6	TDP	Input/Output	Host USB Transceiver D+ Connection
7	TDM	Input/Output	Host USB Transceiver D- Connection
8	CB	Input	Switch Control Bit 0 = autodetection charger identification active 1 = pass-through mode active, DP/DM connected to TDP/TDM
9	Thermal Pad	GND	Ground

Ordering Information

Part Number	Type
SLG55566V	TDFN-8
SLG55566AV	TDFN-8
SLG55566VTR	TDFN-8 - Tape and Reel
SLG55566AVTR	TDFN-8 - Tape and Reel

Absolute Maximum Conditions

Parameter	Min.	Max.	Unit
Supply Voltage	-0.3	6.0	V
Continuous Current into any terminal	-30	+30	mA
Continuous Power Dissipation	--	954	mW
Operating Temperature Range	-40	85	°C
Junction Temperature		150	°C
Storage Temperature Range	-65	150	°C
Lead Temperature (Soldering, 10s)		260	°C

Electrical Characteristics - Power Supply

V_{DD} = 2.8V to 5.5V, T_A = 25°C (unless specified otherwise)

Symbol	Parameter	Condition/Note	Min.	Typ.	Max.	Unit
V_{DD}	Power Supply Range	$V_{CB} > V_{IH}$	2.8	--	5.5	V
		V_{CB} = 0V	4.75	--	5.25	V
I_{DD}	Supply Current	$V_{CB} = V_{DD}$, V_{DD} = 3.3	--	--	6	µA
		$V_{CB} = V_{DD}$, V_{DD} = 5.5	--	--	8	µA
		V_{CB} = 0V, V_{DD} = 4.75	--	110	145	µA
		V_{CB} = 0V, V_{DD} = 5.25V	--	120	160	µA
ΔI_{DD}	Supply Current Increase	$0 \le V_{CB} \le V_{IL}$ or $V_{IH} \le V_{CB} \le V_{DD}$	--	--	2	µA

Electrical Characteristics - Analog Switch

V_{DD} = 2.8V to 5.5V, T_A = 25°C (unless specified otherwise)

Symbol	Parameter	Condition/Note	Min.	Typ.	Max.	Unit
V_{DP}, V_{DM}	Analog signal Range		0	--	V_{DD}	V
R_{ON}	On Resistance TDP/TDM Switch	$V_{DP} = V_{DM}$ = -0.4V to 0.4V I = 10mA	--	3.5	--	Ω
		$V_{DP} = V_{DM}$ = 0V to 3.3V V_{DD}= 5.0V	--	4.0	7	Ω
ΔR_{ON}	On Resistance Match between channels TDP/TDM Switch	V_{DD} = 5.0V $V_{DP} = V_{DM}$ = 400mV $I_{DP} = I_{DM}$ = 10mA	--	0.1	--	Ω
R_{FLAT}	On Resistance flatness TDP/TDM Switch	V_{DD} = 5.0V $V_{DP} = V_{DM}$ = 0V to V$I_{DP} = I_{DM}$ = 10mA	--	0.5	--	Ω
R_{SHORT}	On Resistance of TDP/TDM Short	V_{CB} = 0V V_{DP} = 1V $I_{DP} = I_{DM}$ = 10mA	--	50	70	Ω
I_{TDPOFF}, I_{TDMOFF}	Off-Leakage Current	V_{DD} = 3.6V $V_{DP} = V_{DM}$ = 0.3V to 3.3V $V_{TDP} = V_{TDM}$ = 3.3V to 0.3V V_{CB} = 0V	-250	--	250	nA
I_{DPON}, I_{DMON}	Off-Leakage Current	V_{DD} = 3.6V $V_{DP} = V_{DM}$ = 3.3V to 0.3V $V_{CB} = V_{DD}$	-250	--	250	nA

Electrical Characteristics - Dynamic Performance

V_{DD} = 2.8V to 5.5V, T_A = 25°C (unless specified otherwise)

Symbol	Parameter	Condition/Note	Min.	Typ.	Max.	Unit
T_{ON}	Turn On Time	V_{TDP} or V_{TDM} = 1.5V R_L = 300Ω C_L = 35pF	--‘	20	100	µs
T_{OFF}	Turn Off Time	V_{TDP} or V_{TDM} = 1.5V R_L = 300Ω C_L = 35pF	--‘	1	5	µs
T_{PLH}, T_{PHL}	TDP/TDM Switch Propagation Delay	R_L = R_S = 50Ω	--	60	--	ps
T_{SKEW}	Output Skew	Skew between DP and DM when connected to TDP and TDM R_L = R_S = 50Ω	--	40	--	ps
C_{OFF}	TDP/TDM Off-Capacitance	f = 1MHz	--‘	2.0	--	pF
C_{ON}	DP/DM On-Capacitance	f = 240MHz	--‘	4.0	5.5	pF
BW	-3dB Bandwidth	R_L = R_S = 50Ω	--	950	--	MHz
V_{ISO}	Off-Isolation	$V_{TDP,}$ V_{DP} = 0dBm R_L = R_S =50Ω f = 250MHz	--	-19.5	--	dB
V_{CT}	Crosstalk	$V_{TDP,}$ V_{DP} = 0dBm R_L = R_S = 50Ω f = 250MHz	--	-24.9	--	dB

Electrical Characteristics - Internal Resistors

V_{DD} = 2.8V to 5.5V, T_A = 25°C (unless specified otherwise)

Symbol	Parameter	Condition/Note	Min.	Typ.	Max.	Unit
R_{PD}	DP/DM Short Pull-down		350	500	700	kΩ
RT_{RP}	RP1/RP2 Ratio		1.485	1.5	1.515	Ratio
R_{RP}	RP1 + RP2 Resistance		93.75	125.0	156.25	kΩ
RT_{RM}	RM1/RM2 Ratio		0.8544	0.863	0.872	Ratio
R_{RM}	RM1 + RM2 Resistance		69.75	93.0	115.18	kΩ

Electrical Characteristics - Logic Input

V_{DD} = 2.8V to 5.5V, T_A = 25°C (unless specified otherwise)

Symbol	Parameter	Condition/Note	Min.	Typ.	Max.	Unit
V_{IH}	CB Input Logic High		1.4	--	--	V
V_{IL}	CB Input Logic Low		--	--	0.4	V
I_{IN}	CB Input Leakage Current	V_{DD} = 5.5V $0 \le V_{CB} \le V_{IL}$ or $V_{IH} \le V_{CB} \le V_{DD}$	-1	--	1	µA

Electrical Characteristics - CEN#/CEN Outputs

V_{DD} = 2.8V to 5.5V, T_A = 25°C (unless specified otherwise)

Symbol	Parameter	Condition/Note	Min.	Typ.	Max.	Unit
T_{VBT}	V_{BUS} Toggle Time	CB = Logic 0 to Logic 1 or Logic 1 to Logic 0	0.5	1	1.5	s
$V_{OH_CEN\#}$	CEN# Output Logic High Voltage	CB = Logic 0 to Logic 1 I_{SOURCE} = 2mA	V_{DD}-0.4V	--	--	V
$I_{OUT_CEN\#}$	CEN# Output Leakage Current	V_{DD} = 5.5V $V_{CEN\#}$ = 0V or CEN# deasserted	--	--	1	µA
V_{OL_CEN}	CEN Output Logic Low Voltage	CB = Logic 0 to Logic 1 I_{SINK} = 2mA	--	--	0.4V	V
I_{OUT_CEN}	CEN Output Leakage Current	V_{DD} = 5.5V V_{CEN} = 5.5V or CEN deasserted	--	--	1	µA

Electrical Characteristics - ESD Protection

V_{DD} = 2.8V to 5.5V, T_A = 25°C (unless specified otherwise)

Symbol	Parameter	Condition/Note	Min.	Typ.	Max.	Unit
V_{ESD}	ESD Protection Level (DP and DM Only)	Human Body Model	--	±8	--	kV
V_{ESD}	ESD Protection Level (All other pins)	Human Body Model	--	±2	--	kV

Package Top Marking System Definition

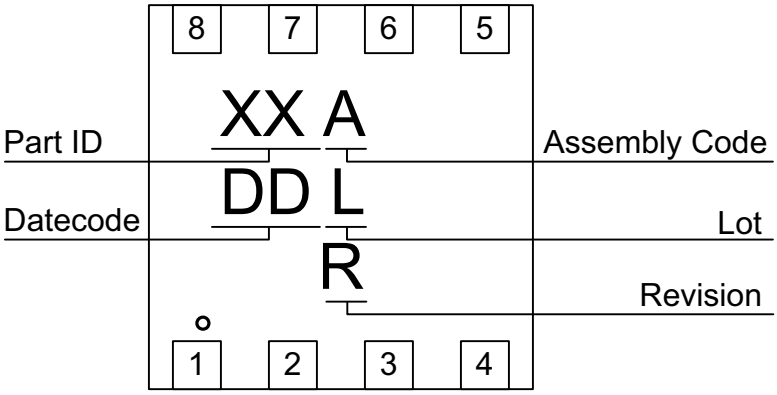

XX – Part ID Field: identifies the specific device configuration
A – Assembly Code Field: Assembly Location of the device.
DD – Date Code Field: Coded date of manufacture
L – Lot Code: Designates Lot #
R – Revision Code: Device Revision

Package Drawing and Dimensions

8 Lead TDFN Package

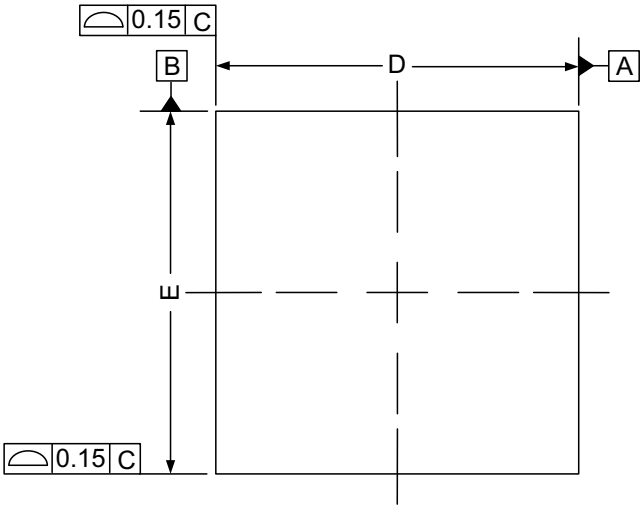

Symbol	Min (mm)	NOM (mm)	Max (mm)
A	0.70	0.75	0.80
A1	0.00	--	0.05
A2	--	0.55	--
A3	--	0.20	--
b	0.20	0.25	0.30
D	1.90	2.00	2.10
D2	1.50	1.60	1.70
E	1.90	2.00	2.10
E2	0.80	0.90	1.00
e	0.50 BSC		
L	0.20	0.30	0.40

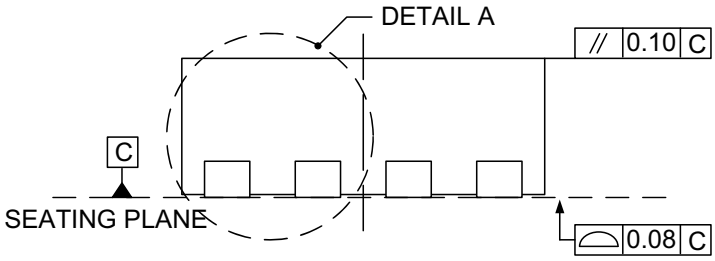

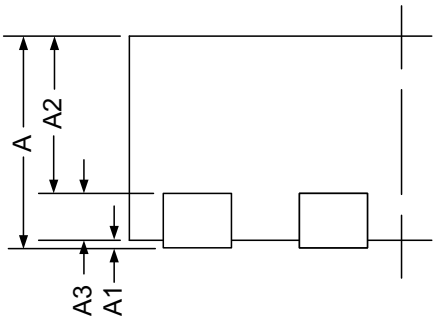

DETAIL A

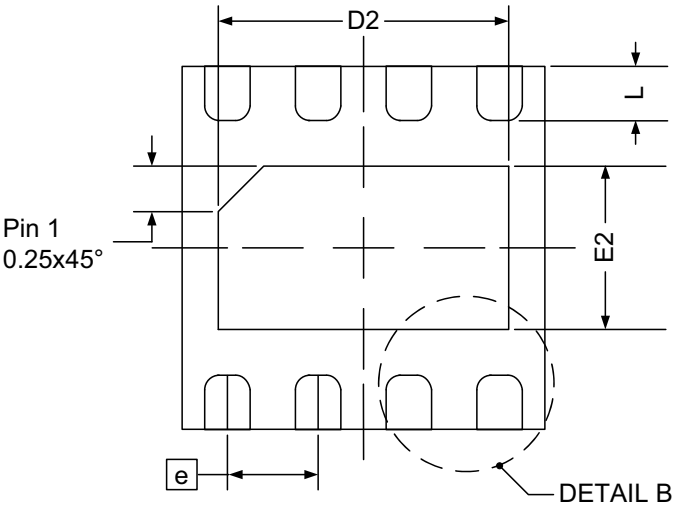

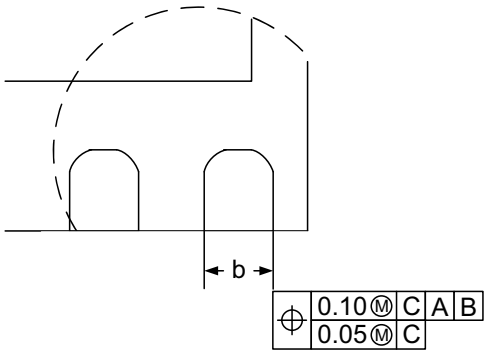

DETAIL B

Tape and Reel Specifications

Package Type	# of Pins	Nominal Package Size	Units per Reel	Trailer A		Leader B		Pocket Tape (mm)		Reel Diameter (mm)
				Pockets	Length (mm)	Pockets	Length (mm)	Width	Pitch	
8TDFN	8	2x2mm	3,000	42	168	42	168	8	4	178

Tape and Reel Drawing

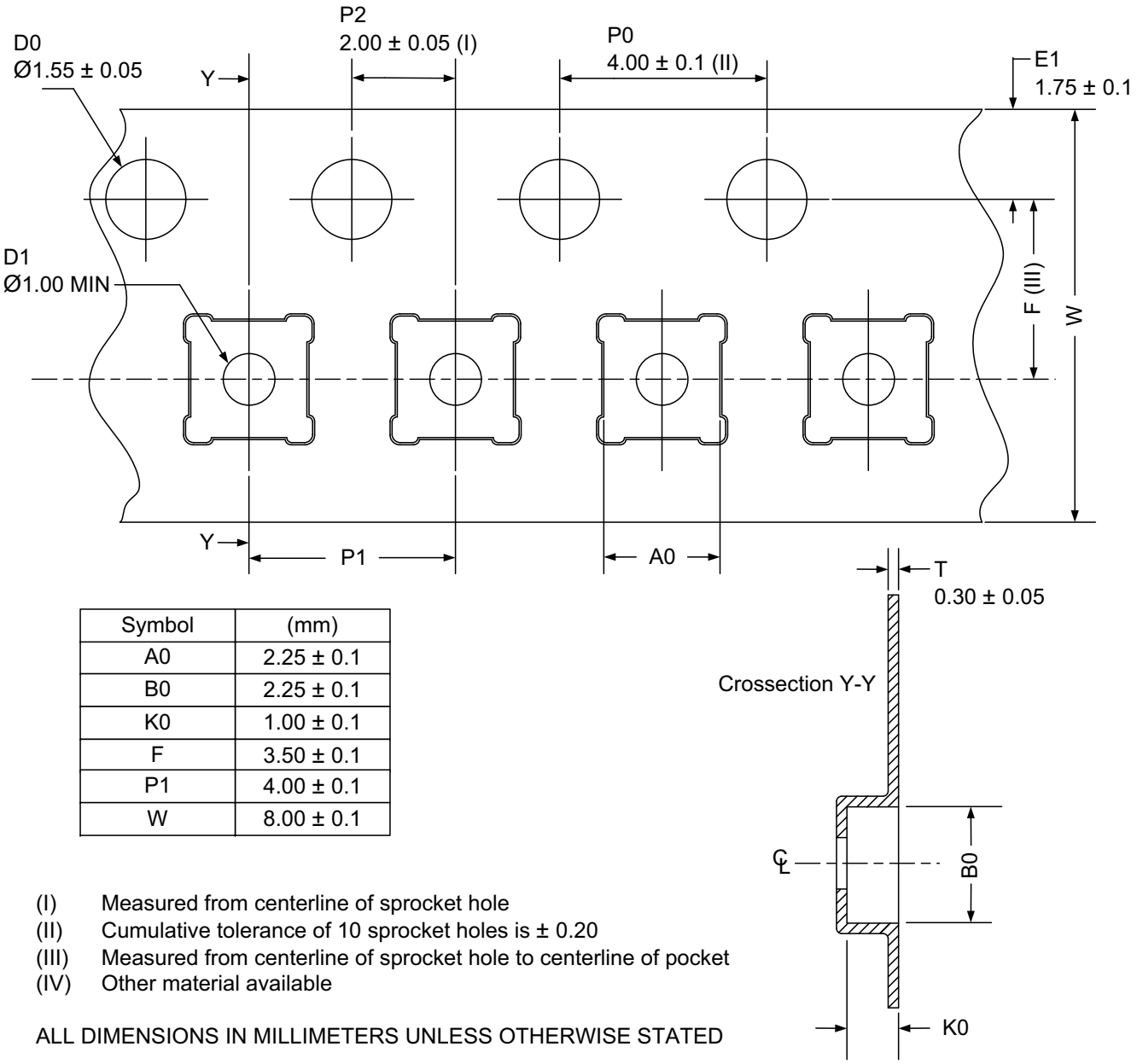

Symbol	(mm)
A0	2.25 ± 0.1
B0	2.25 ± 0.1
K0	1.00 ± 0.1
F	3.50 ± 0.1
P1	4.00 ± 0.1
W	8.00 ± 0.1

(I) Measured from centerline of sprocket hole
(II) Cumulative tolerance of 10 sprocket holes is ± 0.20
(III) Measured from centerline of sprocket hole to centerline of pocket
(IV) Other material available

ALL DIMENSIONS IN MILLIMETERS UNLESS OTHERWISE STATED

IMPORTANT NOTICE AND DISCLAIMER

RENESAS ELECTRONICS CORPORATION AND ITS SUBSIDIARIES (“RENESAS”) PROVIDES TECHNICAL SPECIFICATIONS AND RELIABILITY DATA (INCLUDING DATASHEETS), DESIGN RESOURCES (INCLUDING REFERENCE DESIGNS), APPLICATION OR OTHER DESIGN ADVICE, WEB TOOLS, SAFETY INFORMATION, AND OTHER RESOURCES “AS IS” AND WITH ALL FAULTS, AND DISCLAIMS ALL WARRANTIES, EXPRESS OR IMPLIED, INCLUDING, WITHOUT LIMITATION, ANY IMPLIED WARRANTIES OF MERCHANTABILITY, FITNESS FOR A PARTICULAR PURPOSE, OR NON-INFRINGEMENT OF THIRD-PARTY INTELLECTUAL PROPERTY RIGHTS.

These resources are intended for developers who are designing with Renesas products. You are solely responsible for (1) selecting the appropriate products for your application, (2) designing, validating, and testing your application, and (3) ensuring your application meets applicable standards, and any other safety, security, or other requirements. These resources are subject to change without notice. Renesas grants you permission to use these resources only to develop an application that uses Renesas products. Other reproduction or use of these resources is strictly prohibited. No license is granted to any other Renesas intellectual property or to any third-party intellectual property. Renesas disclaims responsibility for, and you will fully indemnify Renesas and its representatives against, any claims, damages, costs, losses, or liabilities arising from your use of these resources. Renesas' products are provided only subject to Renesas' Terms and Conditions of Sale or other applicable terms agreed to in writing. No use of any Renesas resources expands or otherwise alters any applicable warranties or warranty disclaimers for these products.

(Disclaimer Rev.1.01)

Corporate Headquarters

TOYOSU FORESIA, 3-2-24 Toyosu,
Koto-ku, Tokyo 135-0061, Japan
www.renesas.com

Trademarks

Renesas and the Renesas logo are trademarks of Renesas Electronics Corporation. All trademarks and registered trademarks are the property of their respective owners.

Contact Information

For further information on a product, technology, the most up-to-date version of a document, or your nearest sales office, please visit www.renesas.com/contact-us/.

© 2026 Renesas Electronics Corporation. All rights reserved.