Description

The AS019PMODEXP-POCZ is basically a PMOD expansion board, where single PMOD input is expanded up to three PMOD outputs with the flexibility of GPIO's to be swap with the any of the other GPIO's available over PMOD connector. Along with that there is provision of on-board relay switch with the control on PMOD GPIO's.

Kit Contents

- AS019PMODEXP-POCZ Board.

Evaluation Board

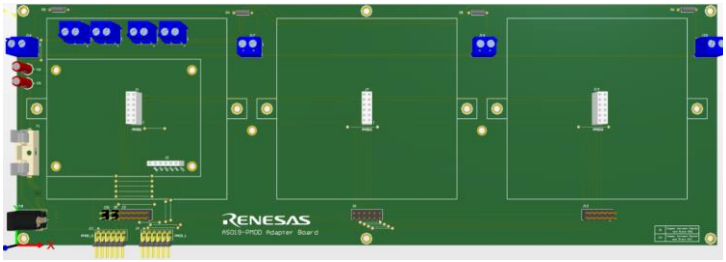

Figure 1. AS019PMODEXP-POCZ PMOD™ Expansion Board

Features

- 12 PIN all PMOD type's expansion capability as mentioned below,
  - PMOD type 1A. (Expanded GPIO)
  - PMOD type 2A. (Expanded SPI)
  - PMOD type 3A. (Expanded UART)
  - PMOD type 6A. (Expanded I2C)
- PMOD expansion voltage depends on the host MCU or MPU.
- Relay circuit operation with 5V DC jack.
- Single layer PCB.

Contents

Description....1
Kit Contents....1
Features....1
Contents....2
1. Functional Description....3
2. Setup....3
2.1 Required or Recommended User Equipment....3
2.2 Kit Hardware Connections....3
2.2.1 RZ/G2L MPU....3
2.2.2 Board with and without Relay card:....4
2.3 On Board Relay Switch....6
2.3.1 Relay Card Schematic:....6
2.3.2 Truth Table for Relay Card:....7
3. AS019PMODEXP-POCZ Application Schematic:....8
4. Bill of Materials (BOM)....9
5. Board Layout....11
6. Ordering Information....12
7. Revision History....12

1. Functional Description

The AS019PMODEXP-POCZ is basically a PMOD expansion board, where single PMOD input is expanded up to three PMOD outputs with the flexibility of GPIO's to be swap with the any of the other GPIO's available over PMOD connector.

2. Setup

2.1 Required or Recommended User Equipment

The AS019PMODEXP-POCZ board can be use with boards mentioned in table 1:

- Based on the functionality required, we can use the AS019PMODEXP-POCZ with or without the Relay card.
- Table 1 shows the compatibility of AS019PMODEXP-POCZ with Renesas MCU & MPU's with and without Relay card.

Table 1. Renesas MCU & MPU Evaluation Kits compatible with AS019PMODEXP-POCZ board.

With Relay card	Without Relay card	
RZ	**RA**	**RL78**
EK-RZ/G2L	EK-RA4W1	RL78/G23-FPB
EK-RZ/V2L	EK-RA2A1	RL78/G22-FPB
EK-RZ/G2UL	EK-RA4M1	RL78/G14-FPB
EK-RZ/G2LC	EK-RA6M1	RL78/G15-FPB
EK-RZ/Five	EK-RA6M2	
	EK-RA6M3	
	EK-RA6M3G	

Note 1. This table is not a comprehensive list of supported MCU & MPU Kits. See the evaluation kit hardware manual to confirm PMOD™ pinout.

2.2 Kit Hardware Connections

2.2.1 RZ/G2L MPU

Follow these procedures to set up the kit connections with RZ/G2L SMARC EVK as shown in AS019PMODEXP-POCZ board.

2. Without Relay Card:

1. When the relay card is not required or not connected, that time components C5, C6, C7, D1, F1, J11, J2, J5, J9, J13, J15, J16, J17, J19, J20, J18, R3, R4, R5, R6 should be DNP or not mounted.
2. All the three PMOD outputs are available to use in without relay card case.
3. J4 PMOD input connector is expanded into a three PMOD output connectors as J1, J7 & J14 respectively, with the flexibility of GPIO swapping between master and slave devices.
4. GPIO's available for swapping are PMOD PIN1, PIN2, PIN7, PIN8, PIN9, PIN10 etc. We can swap any of these pins between master and slave devices with the help of wire jumpers.

5. Other PMOD pins PIN3 & PIN4 are passthrough and are directly available on PMOD output connectors and the option of pin swapping is not available for these pins.

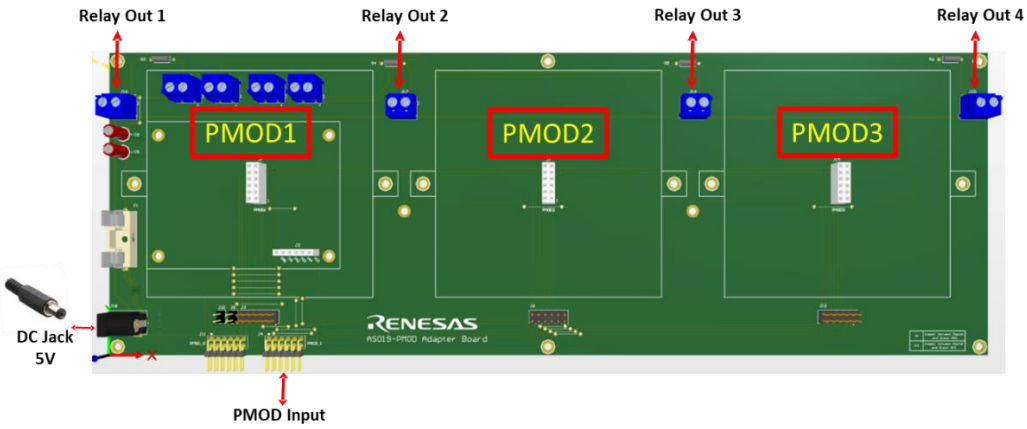

Figure 4: AS019PMODEXP-POCZ without Relay Card

.

1. Connect AS019PMODEXP-POCZ module to PMOD connectors of RZ/G2L SMARC EVK platform.
2. Connect micro-SD Card to the slot present in carrier board connection (Figure 2.)
3. Connect debug console to serial terminal application software (Figure 2.)
4. Before powering up the board check the on-board jumper settings of J3, J6 & J12 as by keeping the jumpers short only we can make PMOD connections pass through. So, make sure all the jumpers are short and their normal status should be NC (Normally Closed).
5. Power on SMARC EVK using type C USB cable.
6. Among the two PMOD connectors on input side PMOD0 & PMOD1 (J11 & J4), PMOD1 (J4) only supports PMOD expansion capabilities to three PMOD outputs (J1, J7 & J14). And PMOD0 (J11) has all the control of relay operation.

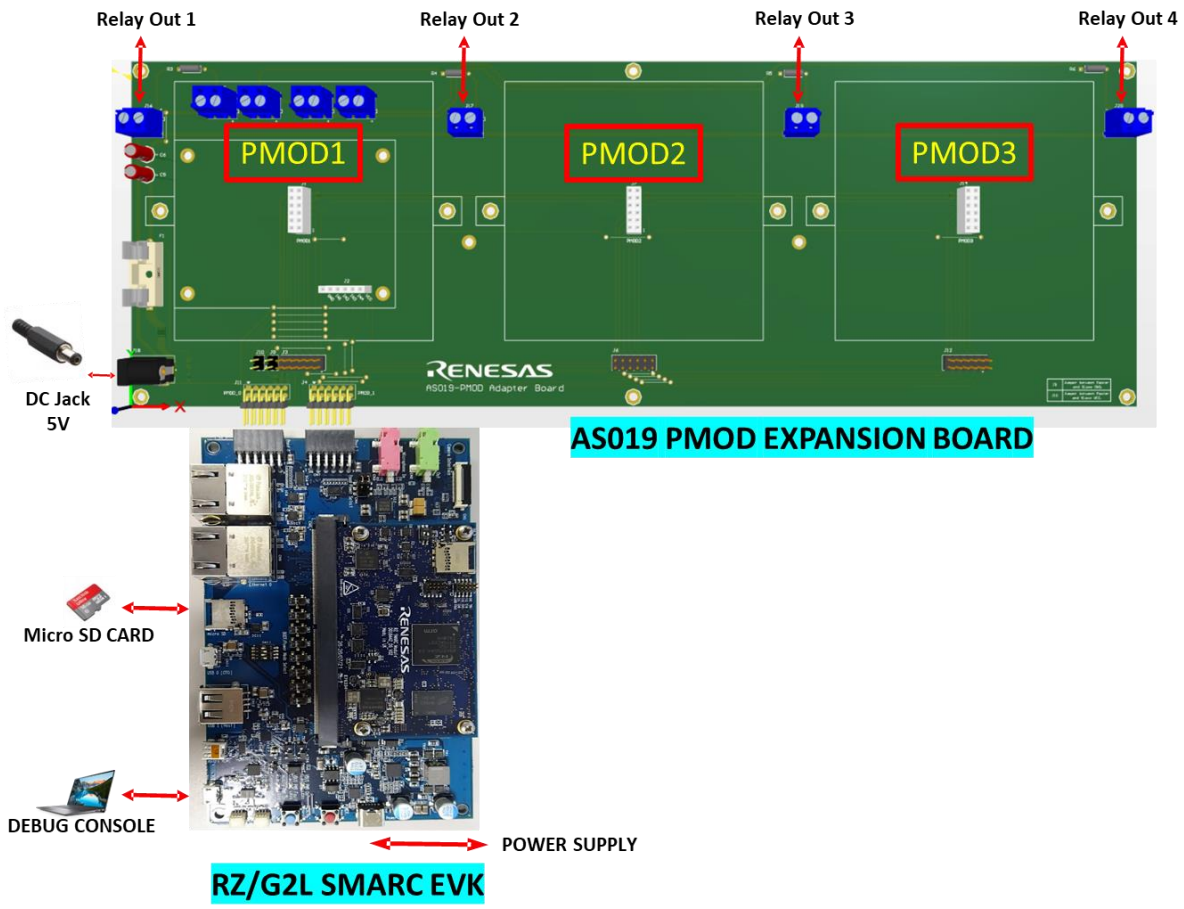

Figure 2. AS019PMODEXP-POCZ Connections with RZ/G2L

2.2.2 Board with and without Relay card:

1. With Relay Card:

1. If we are using the board with relay card, this will block the access for 1st PMOD output on expansion board, and in this case connector J1 on board should be DNP or not mounted.
2. To connect the relay card with board, insert the male burg stick connector on relay card into the J2 connector on expansion board. (As shown in Figure 3)
3. While using the relay card, the relay control is on the PMOD0 (J11) on input side. While PMOD1 (J4) acts as a expansion connector with three PMOD outputs on J1, J7 & J11 respectively.

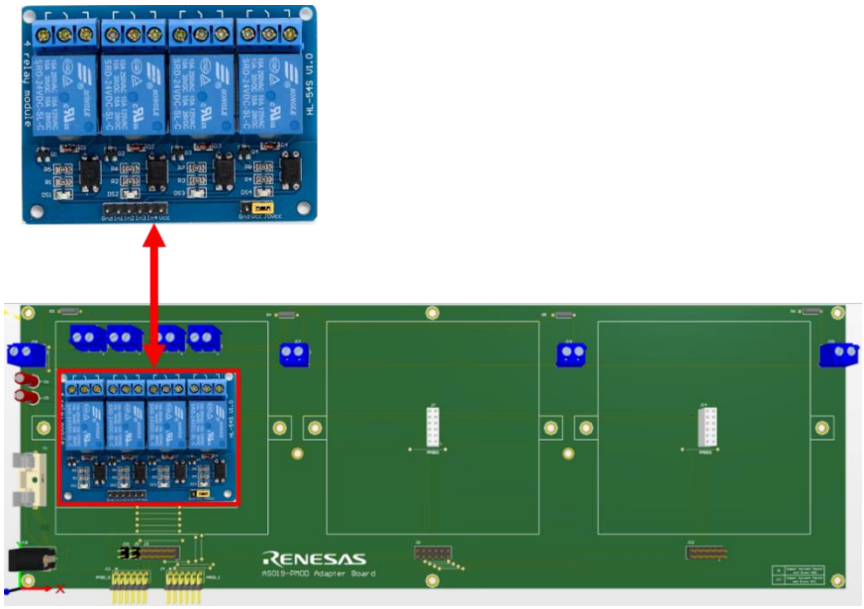

Figure 3. Relay Card Connections with AS019PMODEXP-POCZ board.

2. Without Relay Card:

6. When the relay card is not required or not connected, that time components C5, C6, C7, D1, F1, J11, J2, J5, J9, J13, J15, J16, J17, J19, J20, J18, R3, R4, R5, R6 should be DNP or not mounted.
7. All the three PMOD outputs are available to use in without relay card case.
8. J4 PMOD input connector is expanded into a three PMOD output connectors as J1, J7 & J14 respectively, with the flexibility of GPIO swapping between master and slave devices.
9. GPIO's available for swapping are PMOD PIN1, PIN2, PIN7, PIN8, PIN9, PIN10 etc. We can swap any of these pins between master and slave devices with the help of wire jumpers.
10. Other PMOD pins PIN3 & PIN4 are passthrough and are directly available on PMOD output connectors and the option of pin swapping is not available for these pins.

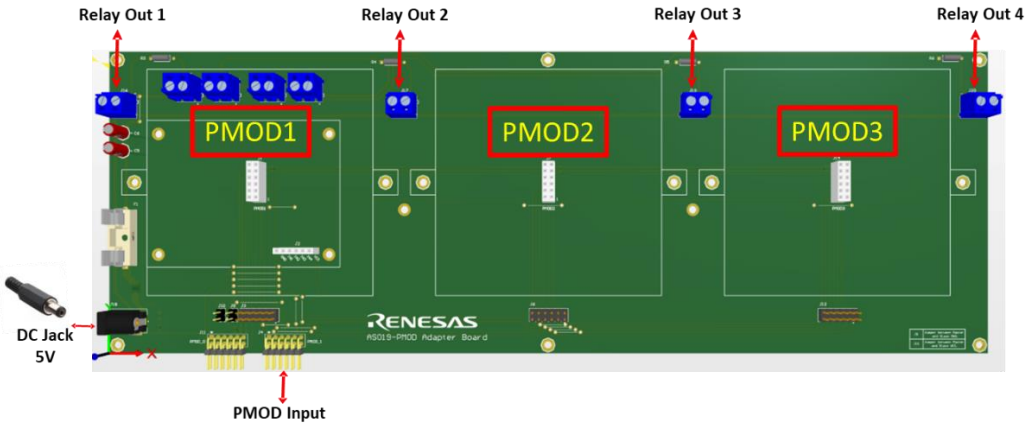

Figure 4: AS019PMODEXP-POCZ without Relay Card

2.3 On Board Relay Switch

Figure 5: Relay Card

2.3.1 Relay Card Schematic:

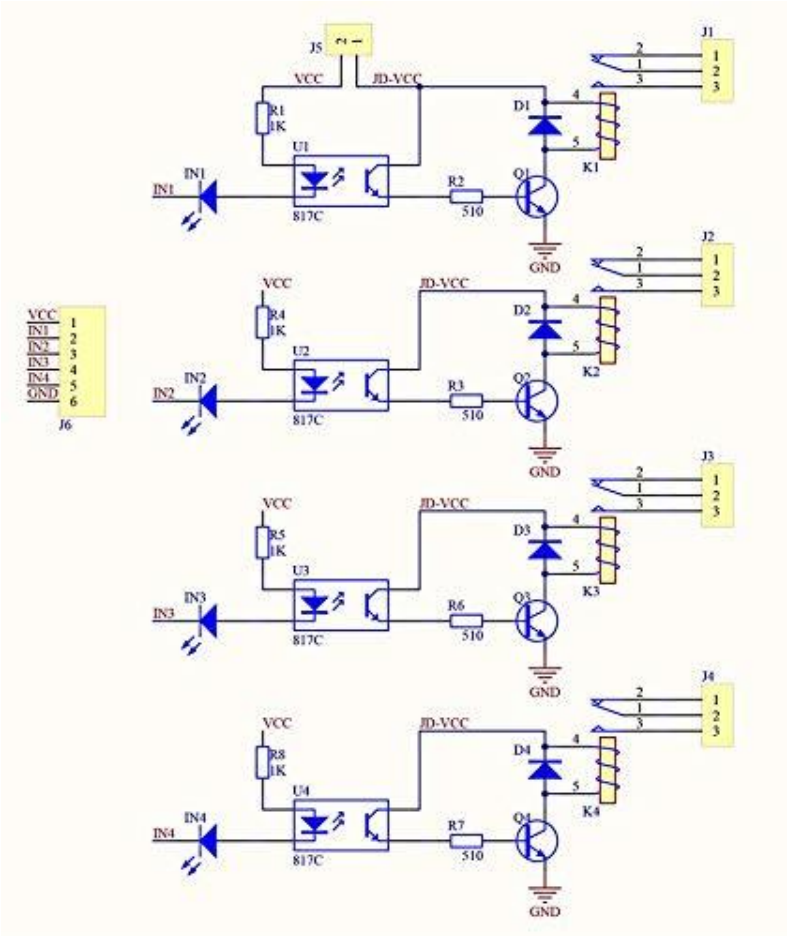

Figure 6: Relay Card Schematics

2.3.2 Truth Table for Relay Card:

Below is the truth table, showing inputs to the relay card in terms of PMOD GPIO Pins and the corresponding outputs to be observe on AS019PMODEXP-POCZ board.

Table 2:Truth Table for Relay Switch

INPUT		OUTPUT	
IN1 (PMOD0 PIN7)	0	1	J16
	1	0	
IN2 (PMOD0 PIN8)	0	1	J17
	1	0	
IN3 (PMOD0 PIN9)	0	1	J19
	1	0	
IN4 (PMOD0 PIN10)	0	1	J20
	1	0	

3. AS019PMODEXP-POCZ Application Schematic:

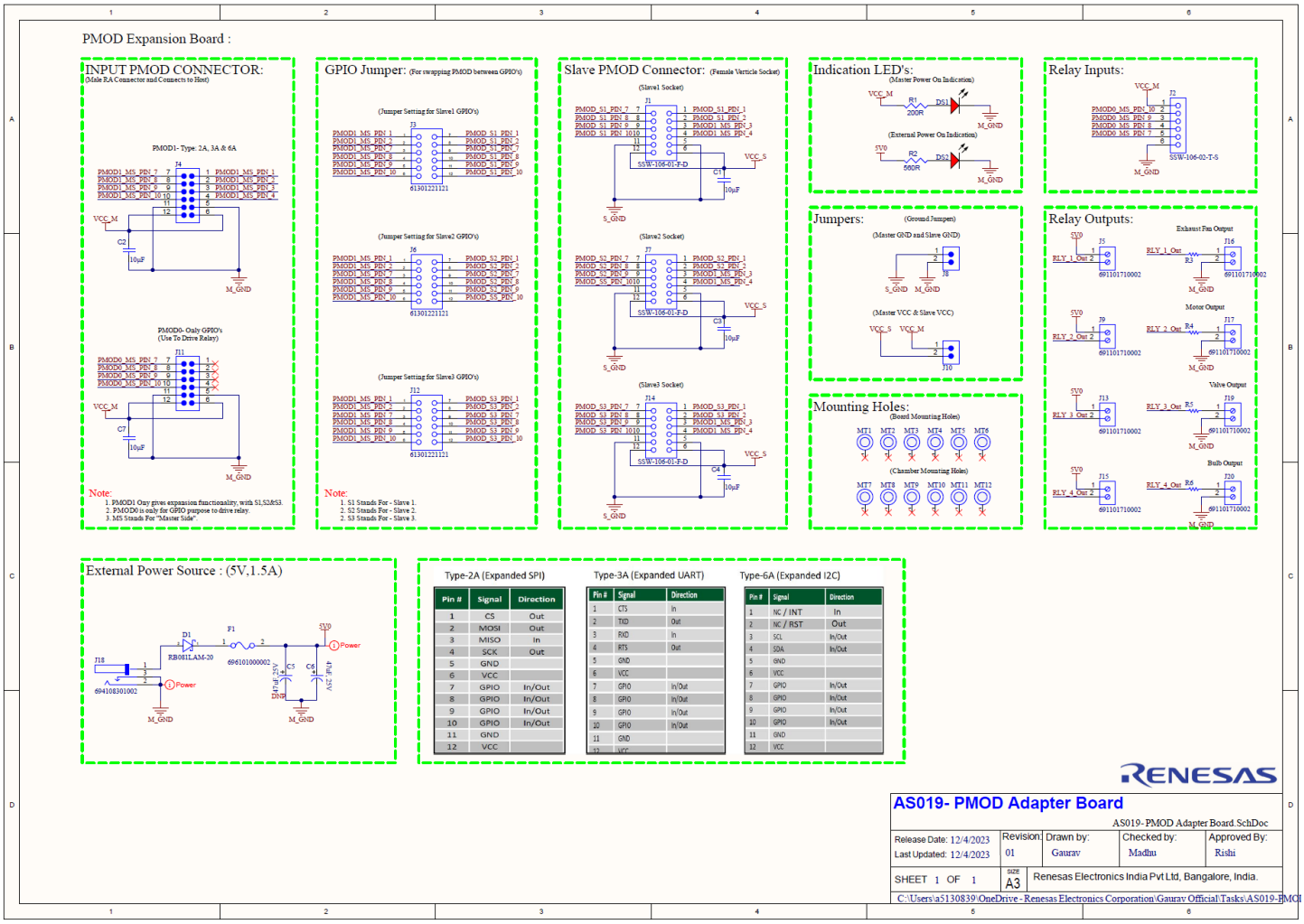

Figure 5. AS019PMODEXP-POCZ Application Schematics

4. Bill of Materials (BOM)

Table 3. AS019PMODEXP-POCZ Board BOM

Item	QTY	Reference	Description	Value	PCB Footprint	ASSY Note	Part Number
1	5	C1, C2, C3, C4, C7	Chip Capacitor, 10 uF, +/- 10%, 16 V, 0805 (2012 Metric)	10uF	0805	Fitted	SSQ-106-03-G-S
2	1	C5	Aluminium Electrolytic Capacitor, Wcap-Atg8 Series, 47 F, 20%, 25 V, 5 Mm, Radial Leaded Rohs Compliant: Yes	47uF, 25V	Radial	Not Fitted	885012106031
3	1	C6	Aluminium Electrolytic Capacitor, Wcap-Atg8 Series, 47 F, 20%, 25 V, 5 Mm, Radial Leaded Rohs Compliant: Yes	47uF, 25V	Radial	Fitted	885012206052
4	1	D1	Diode Schottky 20 V 5A Surface Mount PMDTM	RB081LAM-20	SOD-128	Fitted	885012206046
5	1	DS1	Yellow 589nm LED Indication - Discrete 2V 0603 (1608 Metric)	Yellow LED	0603	Fitted	150060VS55040
6	1	DS2	Green 573nm LED Indication - Discrete 2V 0603 (1608 Metric)	Green LED	0603	Fitted	SSQ-110-03-G-S
7	1	F1	Fuse Block 10 A 250V 1 Circuit Cartridge Through Hole	6.96101E+11	TH	Fitted	SSQ-108-03-G-S
8	1	J2	SQ Post Socket, Through-hole, Vertical, -55 to 105 degC, 2.54mm Pitch, 6-Pin, Female, RoHS	SSW-106-02-T-S	TH	Fitted	613012243121
9	2	J4, J11	Connector Header Through Hole, Right Angle 12 position 0.100" (2.54mm)	PMOD_6X2_RA_TH_ Header	TH	Fitted	61001221821
10	8	J5, J9, J13, J15, J16, J17, J19, J20	Series 101 - 5.00 mm Horizontal Entry Modular with Pressure Clamp WR-TBL, 2 pin	6.91102E+11	TH	Fitted	61301221021
11	2	J6, J12	THT Vertical Pin Header WR-PHD, Pitch 2.54 mm, Dual Row, 12 pins	61301221121	TH	Fitted	61300411121
12	2	J7, J14	SQ Post Socket, Through-hole, Vertical, -55 to 125 degC, 2.54mm Pitch, 12-Pin, Female, RoHS	SSW-106-01-F-D	TH	Fitted	FTSH-105-01-L-DV-007-K
13	2	J8, J10	Connector Header Through Hole 2 position, 2.54mm pitch.	CON-100039-01	TH	Fitted	FTS-102-01-L-S
14	1	J18	Power Barrel Connector Jack 2.50mm ID (0.098"), 5.50mm OD (0.217") Through Hole, Right Angle	6.94108E+11	TH	Fitted	SSQ-108-03-G-S
15	12	MT1, MT2, MT3, MT4, MT5, MT6, MT7, MT8, MT9, MT10, MT11, MT12	Plated mounting hole 3mm dimeter.	MTH		Fitted	RC0603FR-134K7L

Item	QTY	Reference	Description	Value	PCB Footprint	ASSY Note	Part Number
16	1	R1	200 Ohms ±1% 0.125W, 1/8W Chip Resistor 0805 (2012 Metric) Moisture Resistant Thick Film	200R	0805	Fitted	RC0603FR-0710KL
17	1	R2	560 Ohms ±1% 0.125W, 1/8W Chip Resistor 0805 (2012 Metric) Moisture Resistant Thick Film	560R	0805	Fitted	RC0603FR-0710KL
18	4	R3, R4, R5, R6	Axial Resistor, 10 KOhm, +/- 1%, 0.25 W, -55 to 155 degC, 2-Pin THD, RoHS, Bulk	MFR-25FBF5210K	Axial	Fitted	RC0603FR-0719K6L

© 2023 Renesas Electronics Corporation

5. Board Layout

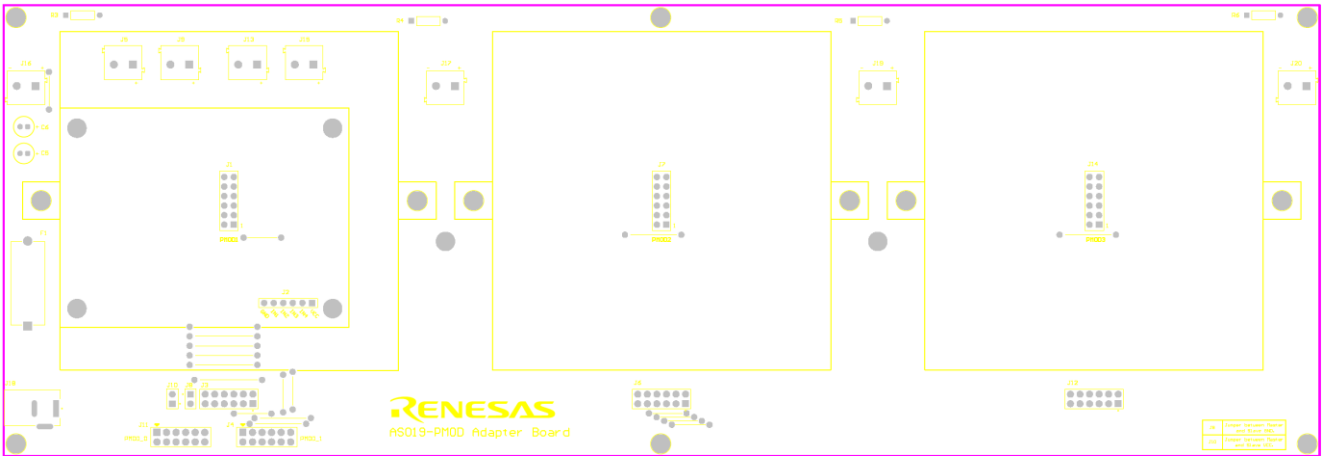

Figure 6. Top Layer

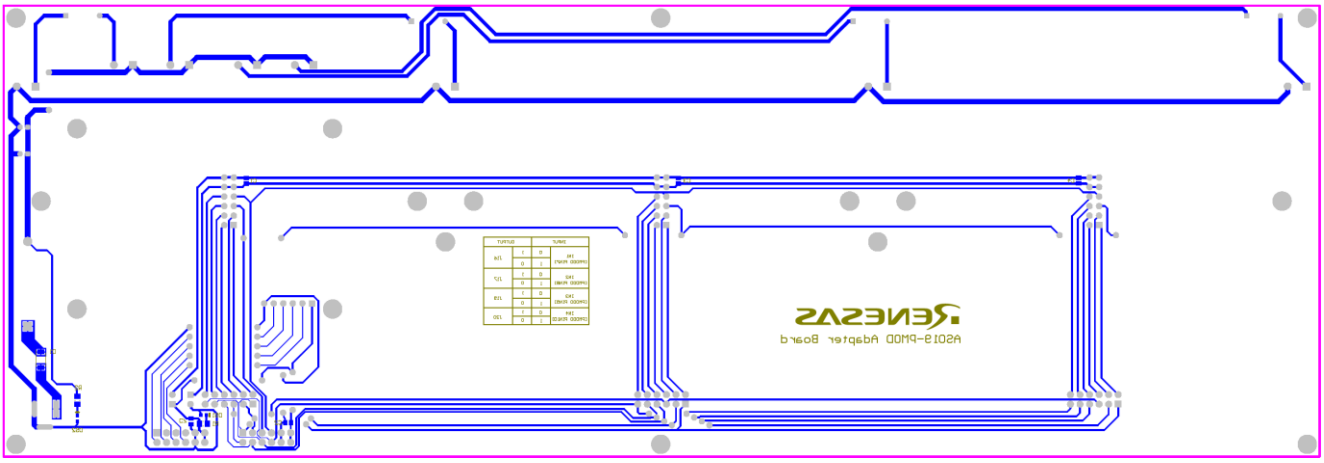

Figure 7. Bottom Layer

6. Ordering Information

Orderable Part Number[a]	Description
AS019PMODEXP-POCZ	AS019- PMOD™ Expansion Board.

7. Revision History

Revision Date	Description of Change
December 05, 2023	Initial release.