User's Manual

32

RA4C1 Group

User's Manual: Hardware

32-Bit MCU
Renesas Advanced (RA) Family
RA4 Series

All information contained in these materials, including products and product specifications, represents information on the product at the time of publication and is subject to change by Renesas Electronics Corp. without notice. Please review the latest information published by Renesas Electronics Corp. through various means, including the Renesas Electronics Corp. website (http://www.renesas.com).

Renesas Electronics
www.renesas.com

Rev.1.10 Jul 2025

Notice

1. Descriptions of circuits, software and other related information in this document are provided only to illustrate the operation of semiconductor products and application examples. You are fully responsible for the incorporation or any other use of the circuits, software, and information in the design of your product or system. Renesas Electronics disclaims any and all liability for any losses and damages incurred by you or third parties arising from the use of these circuits, software, or information.
2. Renesas Electronics hereby expressly disclaims any warranties against and liability for infringement or any other claims involving patents, copyrights, or other intellectual property rights of third parties, by or arising from the use of Renesas Electronics products or technical information described in this document, including but not limited to, the product data, drawings, charts, programs, algorithms, and application examples.
3. No license, express, implied or otherwise, is granted hereby under any patents, copyrights or other intellectual property rights of Renesas Electronics or others.
4. You shall be responsible for determining what licenses are required from any third parties, and obtaining such licenses for the lawful import, export, manufacture, sales, utilization, distribution or other disposal of any products incorporating Renesas Electronics products, if required.
5. You shall not alter, modify, copy, or reverse engineer any Renesas Electronics product, whether in whole or in part. Renesas Electronics disclaims any and all liability for any losses or damages incurred by you or third parties arising from such alteration, modification, copying or reverse engineering.
6. Renesas Electronics products are classified according to the following two quality grades: “Standard” and “High Quality”. The intended applications for each Renesas Electronics product depends on the product’s quality grade, as indicated below.
   "Standard": Computers; office equipment; communications equipment; test and measurement equipment; audio and visual equipment; home electronic appliances; machine tools; personal electronic equipment; industrial robots; etc.
   "High Quality": Transportation equipment (automobiles, trains, ships, etc.); traffic control (traffic lights); large-scale communication equipment; key financial terminal systems; safety control equipment; etc.
   Unless expressly designated as a high reliability product or a product for harsh environments in a Renesas Electronics data sheet or other Renesas Electronics document, Renesas Electronics products are not intended or authorized for use in products or systems that may pose a direct threat to human life or bodily injury (artificial life support devices or systems; surgical implantations; etc.), or may cause serious property damage (space system; undersea repeaters; nuclear power control systems; aircraft control systems; key plant systems; military equipment; etc.). Renesas Electronics disclaims any and all liability for any damages or losses incurred by you or any third parties arising from the use of any Renesas Electronics product that is inconsistent with any Renesas Electronics data sheet, user’s manual or other Renesas Electronics document.
7. No semiconductor product is absolutely secure. Notwithstanding any security measures or features that may be implemented in Renesas Electronics hardware or software products, Renesas Electronics shall have absolutely no liability arising out of any vulnerability or security breach, including but not limited to any unauthorized access to or use of a Renesas Electronics product or a system that uses a Renesas Electronics product. RENESAS ELECTRONICS DOES NOT WARRANT OR GUARANTEE THAT RENESAS ELECTRONICS PRODUCTS, OR ANY SYSTEMS CREATED USING RENESAS ELECTRONICS PRODUCTS WILL BE INVULNERABLE OR FREE FROM CORRUPTION, ATTACK, VIRUSES, INTERFERENCE, HACKING, DATA LOSS OR THEFT, OR OTHER SECURITY INTRUSION (“Vulnerability Issues”). RENESAS ELECTRONICS DISCLAIMS ANY AND ALL RESPONSIBILITY OR LIABILITY ARISING FROM OR RELATED TO ANY VULNERABILITY ISSUES. FURTHERMORE, TO THE EXTENT PERMITTED BY APPLICABLE LAW, RENESAS ELECTRONICS DISCLAIMS ANY AND ALL WARRANTIES, EXPRESS OR IMPLIED, WITH RESPECT TO THIS DOCUMENT AND ANY RELATED OR ACCOMPANYING SOFTWARE OR HARDWARE, INCLUDING BUT NOT LIMITED TO THE IMPLIED WARRANTIES OF MERCHANTABILITY, OR FITNESS FOR A PARTICULAR PURPOSE.
8. When using Renesas Electronics products, refer to the latest product information (data sheets, user’s manuals, application notes, “General Notes for Handling and Using Semiconductor Devices” in the reliability handbook, etc.), and ensure that usage conditions are within the ranges specified by Renesas Electronics with respect to maximum ratings, operating power supply voltage range, heat dissipation characteristics, installation, etc. Renesas Electronics disclaims any and all liability for any malfunctions, failure or accident arising out of the use of Renesas Electronics products outside of such specified ranges.
9. Although Renesas Electronics endeavors to improve the quality and reliability of Renesas Electronics products, semiconductor products have specific characteristics, such as the occurrence of failure at a certain rate and malfunctions under certain use conditions. Unless designated as a high reliability product or a product for harsh environments in a Renesas Electronics data sheet or other Renesas Electronics document, Renesas Electronics products are not subject to radiation resistance design. You are responsible for implementing safety measures to guard against the possibility of bodily injury, injury or damage caused by fire, and/or danger to the public in the event of a failure or malfunction of Renesas Electronics products, such as safety design for hardware and software, including but not limited to redundancy, fire control and malfunction prevention, appropriate treatment for aging degradation or any other appropriate measures. Because the evaluation of microcomputer software alone is very difficult and impractical, you are responsible for evaluating the safety of the final products or systems manufactured by you.
10. Please contact a Renesas Electronics sales office for details as to environmental matters such as the environmental compatibility of each Renesas Electronics product. You are responsible for carefully and sufficiently investigating applicable laws and regulations that regulate the inclusion or use of controlled substances, including without limitation, the EU RoHS Directive, and using Renesas Electronics products in compliance with all these applicable laws and regulations. Renesas Electronics disclaims any and all liability for damages or losses occurring as a result of your noncompliance with applicable laws and regulations.
11. Renesas Electronics products and technologies shall not be used for or incorporated into any products or systems whose manufacture, use, or sale is prohibited under any applicable domestic or foreign laws or regulations. You shall comply with any applicable export control laws and regulations promulgated and administered by the governments of any countries asserting jurisdiction over the parties or transactions.
12. It is the responsibility of the buyer or distributor of Renesas Electronics products, or any other party who distributes, disposes of, or otherwise sells or transfers the product to a third party, to notify such third party in advance of the contents and conditions set forth in this document.
13. This document shall not be reprinted, reproduced or duplicated in any form, in whole or in part, without prior written consent of Renesas Electronics.
14. Please contact a Renesas Electronics sales office if you have any questions regarding the information contained in this document or Renesas Electronics products.

(Note1) “Renesas Electronics” as used in this document means Renesas Electronics Corporation and also includes its directly or indirectly controlled subsidiaries.
(Note2) “Renesas Electronics product(s)” means any product developed or manufactured by or for Renesas Electronics.

(Rev.5.0-1 October 2020)

Corporate Headquarters

TOYOSU FORESIA, 3-2-24 Toyosu,
Koto-ku, Tokyo 135-0061, Japan
www.renesas.com

Contact Information

For further information on a product, technology, the most up-to-date version of a document, or your nearest sales office, please visit:
www.renesas.com/contact/

Trademarks

Renesas and the Renesas logo are trademarks of Renesas Electronics Corporation. All trademarks and registered trademarks are the property of their respective owners.

© 2025 Renesas Electronics Corporation. All rights reserved.

General Precautions in the Handling of Microprocessing Unit and Microcontroller Unit Products

The following usage notes are applicable to all Microprocessing unit and Microcontroller unit products from Renesas. For detailed usage notes on the products covered by this document, refer to the relevant sections of the document as well as any technical updates that have been issued for the products.

1. Precaution against Electrostatic Discharge (ESD)
   A strong electrical field, when exposed to a CMOS device, can cause destruction of the gate oxide and ultimately degrade the device operation. Steps must be taken to stop the generation of static electricity as much as possible, and quickly dissipate it when it occurs. Environmental control must be adequate. When it is dry, a humidifier should be used. This is recommended to avoid using insulators that can easily build up static electricity. Semiconductor devices must be stored and transported in an anti-static container, static shielding bag or conductive material. All test and measurement tools including work benches and floors must be grounded. The operator must also be grounded using a wrist strap. Semiconductor devices must not be touched with bare hands. Similar precautions must be taken for printed circuit boards with mounted semiconductor devices.
2. Processing at power-on
   The state of the product is undefined at the time when power is supplied. The states of internal circuits in the LSI are indeterminate and the states of register settings and pins are undefined at the time when power is supplied. In a finished product where the reset signal is applied to the external reset pin, the states of pins are not guaranteed from the time when power is supplied until the reset process is completed. In a similar way, the states of pins in a product that is reset by an on-chip power-on reset function are not guaranteed from the time when power is supplied until the power reaches the level at which resetting is specified.
3. Input of signal during power-off state
   Do not input signals or an I/O pull-up power supply while the device is powered off. The current injection that results from input of such a signal or I/O pull-up power supply may cause malfunction and the abnormal current that passes in the device at this time may cause degradation of internal elements. Follow the guideline for input signal during power-off state as described in your product documentation.
4. Handling of unused pins
   Handle unused pins in accordance with the directions given under handling of unused pins in the manual. The input pins of CMOS products are generally in the high-impedance state. In operation with an unused pin in the open-circuit state, extra electromagnetic noise is induced in the vicinity of the LSI, an associated shoot-through current flows internally, and malfunctions occur due to the false recognition of the pin state as an input signal become possible.
5. Clock signals
   After applying a reset, only release the reset line after the operating clock signal becomes stable. When switching the clock signal during program execution, wait until the target clock signal is stabilized. When the clock signal is generated with an external resonator or from an external oscillator during a reset, ensure that the reset line is only released after full stabilization of the clock signal. Additionally, when switching to a clock signal produced with an external resonator or by an external oscillator while program execution is in progress, wait until the target clock signal is stable.
6. Voltage application waveform at input pin
   Waveform distortion due to input noise or a reflected wave may cause malfunction. If the input of the CMOS device stays in the area between V_{IL} (Max.) and V_{IH} (Min.) due to noise, for example, the device may malfunction. Take care to prevent chattering noise from entering the device when the input level is fixed, and also in the transition period when the input level passes through the area between V_{IL} (Max.) and V_{IH} (Min.).
7. Prohibition of access to reserved addresses
   Access to reserved addresses is prohibited. The reserved addresses are provided for possible future expansion of functions. Do not access these addresses as the correct operation of the LSI is not guaranteed.
8. Differences between products
   Before changing from one product to another, for example to a product with a different part number, confirm that the change will not lead to problems. The characteristics of a microprocessing unit or microcontroller unit products in the same group but having a different part number might differ in terms of internal memory capacity, layout pattern, and other factors, which can affect the ranges of electrical characteristics, such as characteristic values, operating margins, immunity to noise, and amount of radiated noise. When changing to a product with a different part number, implement a system-evaluation test for the given product.

Preface

1. About this document

This manual is generally organized into an overview of the product, descriptions of the CPU, system control functions, peripheral functions, electrical characteristics, and usage notes. This manual describes the product specification of the microcontroller (MCU) superset. Depending on your product, some pins, registers, or functions might not exist. Address space that store unavailable registers are reserved.

2. Audience

This manual is written for system designers who are designing and programming applications using the Renesas Microcontroller. The user is expected to have basic knowledge of electrical circuits, logic circuits, and the MCU.

3. Renesas Publications

Renesas provides the following documents. Before using any of these documents, visit www.renesas.com for the most up-to-date version of the document.

Component	Document Type	Description
Microcontrollers	Data sheet	Features, overview, and electrical characteristics of the MCU
	User's Manual: Hardware	MCU specifications such as pin assignments, memory maps, peripheral functions, electrical characteristics, timing diagrams, and operation descriptions
	Application Notes	Technical notes, board design guidelines, and software migration information
	Technical Update (TU)	Preliminary reports on product specifications such as restriction and errata
Software	User's Manual: Software	API reference and programming information
	Application Notes	Project files, guidelines for software programming, and application examples to develop embedded software applications
Tools & Kits, Solutions	User's Manual: Development Tools	User's manual and quick start guide for developing embedded software applications with Development Kits (DK), Starter Kits (SK), Promotion Kits (PK), Product Examples (PE), and Application Examples (AE)
	User's Manual: Software	
	Quick Start Guide	
	Application Notes	Project files, guidelines for software programming, and application examples to develop embedded software applications

4. Numbering Notation

The following numbering notation is used throughout this manual:

Example	Description
011b	Binary number. For example, the binary equivalent of the number 3 is 011b.
0x1F	Hexadecimal number. For example, the hexadecimal equivalent of the number 31 is described 0x1F. In some cases, a hexadecimal number is shown with the suffix "h".
1234	Decimal number. A decimal number is followed by this symbol only when the possibility of confusion exists. Decimal numbers are generally shown without a suffix.

5. Typographic Notation

The following typographic notation is used throughout this manual:

Example	Description
AAA.BBB.CCC	Periods separated a function module symbol (AAA), register symbol (BBB), and bit field symbol (CCC).
AAA.BBB	A period separated a function module symbol (AAA) and register symbol (BBB).
BBB.DDD	A period separated a register symbol (BBB) and bit field symbol (DDD).
EEE[3:0]	Numbers in brackets expresses a bit number. For example, EEE[3:0] occupies bits 3 to 0.

6. Unit and Unit Prefix

The following units and unit prefixes are sometimes misleading. Those unit prefixes are described throughout this manual with the following meaning:

Symbol	Name	Description
b	Binary Digit	Single 0 or 1
B	Byte	This unit is generally used for memory specification of the MCU and address space.
k	kilo-	1000 = 10^3. k is also used to denote 1024 (2^{10}) but this unit prefix is used to denote 1000 (10^3) throughout this manual.
K	Kilo-	1024 = 2^{10}. This unit prefix is used to denote 1024 (2^{10}) not 1000 (10^3) throughout this manual.

7. Special Terms

The following terms have special meanings.

Term	Description
NC	Not connected pin. This pin should be left floating unless specified otherwise.
Hi-Z	High impedance.
x	Don't care or undefined.

8. Register Description

Each register description includes both a register diagram that shows the bit assignments and a register bit table that describes the content of each bit. The example of symbols used in these tables are described in the sections that follow. The following is an example of a register description and associated bit field definition.

XX.X.X {*register/name*} : {*register/description*}

Base Address: {*peripheral/name*} = {*peripheral/baseAddress*}

Offset Address: {*register/addressOffset*}

(1)

Bit potision:	7	6	5	4	3	2	1	0
Bit Field:	–	–	–	–	–	–	–	{*field/name*}
Value after reset:	0	0	0	0	0	0	0	0

(2)

(3)

(4) (5) (6)

Bit	Symbol	Function	R/W
0	{*field/name*}	{*field/description*} 0: {*enumeratedValue/description*} 1: {*enumeratedValue/description*}	{*access*}
7:1	–	These bits are read as 0. The write value should be 0.	R/W

(1) Function module symbol, register symbol, and address assignment

Function module symbol, {*pheripheral/name*}, register symbol, {*register/name*}, and address assignment of this register are generally expressed. Base Address and Offset Address mean {*regiser/name*} : {*register/description*} of {*peripheral/name*} is assigned to address {*peripheral/baseAddress*} + {*register/addressOffset*}.

(2) Bit number

This number indicates the bit number. This bits are shown in order from bits 31 to 0 for 32-bit register, from bits 15 to 0 for 16-bit register, and from bits 7 to 0 for 8-bit register.

(3) Value after reset

This symbol or number indicate the value of each bit after a hard reset. The value is shown in binary unless specified otherwise.

0: Indicates that the value is 0 after a reset.

1: Indicates that the value is 1 after a reset.

x: Indicates that the value is undefined after a reset.

(4) Symbol

{*filed/name*} indicates the short name of bit field. Reserved bit is expressed with a —.

(5) Function

Function indicates the full name of the bit field, {*field/description*}, and enumerated values.

(6) R/W

The R/W column indicates access type whether the bit field is readable or writable.

R/W: The bit field is readable and writable.

R: The bit field is readable only. Writing to this bit field has no effect.

W: The bit field is writable only. The read value is the same as after a reset unless specified otherwise.

9. Abbreviations

Abbreviations used in this document are shown in the following table.

Abbreviation	Description
AES	Advanced Encryption Standard
AHB	Advanced High-performance Bus
AHB-AP	AHB Access Port
APB	Advanced Peripheral Bus
ARC	Alleged RC
ATB	Advanced Trace Bus
BCD	Binary Coded Decimal
BSDL	Boundary Scan Description Language
DES	Data Encryption Standard
DSA	Digital Signature Algorithm
ETB	Embedded Trace Buffer
ETM	Embedded Trace Macrocell
FLL	Frequency Locked Loop
FPU	Floating Point Unit
HMI	Human Machine Interface
IrDA	Infrared Data Association
LSB	Least Significant Bit
MSB	Most Significant Bit
NVIC	Nested Vector Interrupt Controller
PC	Program Counter
PFS	Port Function Select
PLL	Phase Locked Loop
POR	Power-on reset
PWM	Pulse Width Modulation
RSA	Rivest Shamir Adleman
SHA	Secure Hash Algorithm
S/H	Sample and Hold
SP	Stack Pointer
SWD	Serial Wire Debug
SW-DP	Serial Wire-Debug Port
TRNG	True Random Number Generator
UART	Universal Asynchronous Receiver/Transmitter
VCO	Voltage Controlled Oscillator

10. Proprietary Notice

All text, graphics, photographs, trademarks, logos, artwork and computer code, collectively known as content, contained in this document is owned, controlled or licensed by or to Renesas, and is protected by trade dress, copyright, patent and trademark laws, and other intellectual property rights and unfair competition laws. Except as expressly provided herein, no part of this document or content may be copied, reproduced, republished, posted, publicly displayed, encoded, translated, transmitted or distributed in any other medium for publication or distribution or for any commercial enterprise, without prior written consent from Renesas.

Arm® and Cortex® are registered trademarks of Arm Limited. CoreSight™ is a trademark of Arm Limited.

CoreMark® is a registered trademark of the Embedded Microprocessor Benchmark Consortium.

Other brands and names mentioned in this document may be the trademarks or registered trademarks of their respective holders.

11. Feedback on the product

If you have any comments or suggestions about this product, go to Contact Us.

Contents

Features **42**
1. Overview **43**
1.1 Function Outline 43
1.2 Block Diagram 48
1.3 Part Numbering 48
1.4 Function Comparison 50
1.5 Pin Functions 51
1.6 Pin Assignments 54
1.7 Pin Lists 56
2. CPU **60**
2.1 Overview 60
2.1.1 CPU 60
2.1.2 Debug 60
2.1.3 Operating Frequency 61
2.1.4 Block Diagram 61
2.2 Implementation Options 61
2.3 SWD Interface 62
2.4 Security Attribution for Memory 62
2.5 Debug Function 63
2.5.1 Debugger Connectivity 63
2.5.2 Emulator Connection 64
2.5.3 Self-Hosted Debug Function 64
2.5.4 Effect of Debug Function 64
2.6 Programmers Model 65
2.6.1 Address Spaces 65
2.6.2 Peripheral Address Map 66
2.6.3 CoreSight ROM Table 66
2.6.4 DBGREG Module 67
2.6.5 OCDREG Module 70
2.6.6 CPUDSAR : CPU Debug Security Attribution Register 75
2.6.7 Processing on Error Response Generated by CPU Access 75
2.7 CoreSight Cross Trigger Interface (CTI) 77
2.8 CoreSight ATB Funnel 78
2.9 Break Point Unit 79
2.10 CoreSight Time Stamp Generator 79
2.11 SysTick Timer 79
2.12 OCD Emulator Connection 79
2.12.1 DBGEN 80
2.12.2 Restrictions on connecting an OCD emulator 80
2.13 References 81
3. Operating Modes **82**
3.1 Overview 82
3.2 Details of Operating Modes 82
3.2.1 Single-Chip Mode 82

3.2.2 SCI Boot Mode 82
3.2.3 SWD Boot Mode 82
3.3 Operating Modes Transitions 82
3.3.1 Operating Mode Transitions as Determined by the Mode-Setting Pin 82
4. Address Space 83
4.1 Address Space 83
5. Resets 84
5.1 Overview 84
5.2 Register Descriptions 89
5.2.1 RSTSAR : Reset Security Attribution Register 89
5.2.2 RSTSR0 : Reset Status Register 0 90
5.2.3 RSTSR1 : Reset Status Register 1 91
5.2.4 RSTSR2 : Reset Status Register 2 94
5.3 Operation 94
5.3.1 RES Pin Reset 94
5.3.2 Power-On Reset 94
5.3.3 Voltage Monitor Reset 95
5.3.4 Independent Watchdog Timer Reset 96
5.3.5 Watchdog Timer Reset 97
5.3.6 Software Reset 97
5.3.7 VRTC Domain Power-On Reset 97
5.3.8 Determination of Cold/Warm Start 98
5.3.9 Determination of Reset Generation Source 98
6. Option-Setting Memory 100
6.1 Overview 100
6.2 Register Descriptions 101
6.2.1 OFS0 : Option Function Select Register 0 101
6.2.2 DUALSEL : Dual Mode Select Register 104
6.2.3 SAS : Startup Area Setting Register 104
6.2.4 OFS1, OFS1_SEC : Option Function Select Register 1 for Non-secure and Secure 105
6.2.5 OFS1_SEL : Option Function Select Register 1 for Security Attribution 106
6.2.6 BANKSEL, BANKSEL_SEC : Bank Select Register for Non-secure and Secure 107
6.2.7 BANKSEL_SEL : Bank Select Register for Security Attribution 108
6.2.8 BPS, BPS_SEC, BPS_SEL : Block Protect Setting Register 109
6.2.9 PBPS, PBPS_SEC : Permanent Block Protect Setting Register 111
6.3 Setting Option-Setting Memory 111
6.3.1 Allocation of Data in Option-Setting Memory 111
6.3.2 Setting Data for Programming Option-Setting Memory 111
6.3.3 Security attribution of option-setting memory 112
6.3.4 Timing of the Setting Value 112
6.4 Usage Notes 112
6.4.1 Data for Programming Reserved Areas and Reserved Bits in the Option-Setting Memory 112
7. Low Voltage Detection (LVD) 113
7.1 Overview 113
7.2 Register Descriptions 117
7.2.1 LVDSAR : Low Voltage Detection Security Attribution Register 117

7.2.2 LVD1CMPCR : Voltage Monitoring 1 Comparator Control Register 118
7.2.3 LVD2CMPCR : Voltage Monitoring 2 Comparator Control Register 118
7.2.4 LVD1CR0 : Voltage Monitor 1 Circuit Control Register 0 119
7.2.5 LVD2CR0 : Voltage Monitor 2 Circuit Control Register 0 120
7.2.6 LVD1CR1 : Voltage Monitor 1 Circuit Control Register 121
7.2.7 LVD1SR : Voltage Monitor 1 Circuit Status Register 122
7.2.8 LVD2CR1 : Voltage Monitor 2 Circuit Control Register 1 122
7.2.9 LVD2SR : Voltage Monitor 2 Circuit Status Register 123
7.2.10 VBTLVDCR : EXLVDVBAT Circuit Control Register 123
7.2.11 VBTLVDSR : EXLVDVBAT Circuit Status Register 124
7.2.12 VBTCMPCR : EXLVDVBAT Comparator Control Register 125
7.2.13 VBTLVDICR : EXLVDVBAT Pin Low Voltage Detect Interrupt Control Register 125
7.2.14 VRTLVDCR : VRTC Low Voltage Detect Circuit Control Register 126
7.2.15 VRTSR : VRTC Status Register 127
7.2.16 VRTCMPCR : VRTC Comparator Control Register 129
7.2.17 VRTLVDICR : VRTC Pin Low Voltage Detect Interrupt Control Register 129
7.2.18 EXLVDCR : EXLVD Circuit Control Register 130
7.2.19 EXLVDSR : EXLVD Circuit Status Register 130
7.2.20 EXLVDCMPCR : EXLVD Comparator Control Register 131
7.2.21 EXLVDICR : EXLVD Pin Low Voltage Detect Interrupt Control Register 131
7.3 VCC Input Voltage Monitor 132
7.3.1 Monitoring V_{det0} 132
7.3.2 Monitoring V_{det1} 132
7.3.3 Monitoring V_{det2} 132
7.4 Reset from Voltage Monitor 0 132
7.5 Interrupt and Reset from Voltage Monitor 1 133
7.6 Interrupt and Reset from Voltage Monitor 2 135
7.7 EXLVDVBAT Pin Low Voltage Detection Procedures 137
7.8 VRTC Pin Low Voltage Detection Procedures 139
7.9 EXLVD Pin Low Voltage Detection Procedures 140
7.10 Event Link Controller (ELC) Output 142
7.10.1 Interrupt Handling and Event Linking 142
8. Clock Generation Circuit 143
8.1 Overview 143
8.2 Register Descriptions 147
8.2.1 CGFSAR : Clock Generation Function Security Attribute Register 147
8.2.2 SCKDIVCR : System Clock Division Control Register 149
8.2.3 SCKSCR : System Clock Source Control Register 151
8.2.4 MEMWAIT : Memory Wait Cycle Control Register for Code Flash 152
8.2.5 FLDWAITR : Memory Wait Cycle Control Register for Data Flash 153
8.2.6 PLLCCR : PLL Clock Control Register 155
8.2.7 PLLCR : PLL Control Register 156
8.2.8 PLLRTCCR : PLL_RTC Control Register 157
8.2.9 MOSCCR : Main Clock Oscillator Control Register 158
8.2.10 SOSCCR : Sub-Clock Oscillator Control Register 159
8.2.11 LOCOCR : Low-Speed On-Chip Oscillator Control Register 159

8.2.12 HOCOCR : High-Speed On-Chip Oscillator Control Register 160
8.2.13 HOCOCR2 : High-Speed On-Chip Oscillator Control Register 2 161
8.2.14 MOCOCR : Middle-Speed On-Chip Oscillator Control Register 162
8.2.15 OSCSF : Oscillation Stabilization Flag Register 163
8.2.16 OSTDCR : Oscillation Stop Detection Control Register 164
8.2.17 OSTDSR : Oscillation Stop Detection Status Register 165
8.2.18 SOSTDCR : Sub-Clock Oscillation Stop Detection Control Register 166
8.2.19 MOSCWTCR : Main Clock Oscillator Wait Control Register 167
8.2.20 MOMCR : Main Clock Oscillator Mode Oscillation Control Register 168
8.2.21 SOMCR : Sub-Clock Oscillator Mode Control Register 168
8.2.22 SOMRG : Sub-Clock Oscillator Margin Check Register 169
8.2.23 SLCDSCKCR : Segment LCD Source Clock Control Register 169
8.2.24 CKOCR : Clock Out Control Register 170
8.2.25 LOCOUTCR : LOCO User Trimming Control Register 171
8.2.26 MOCOUTCR : MOCO User Trimming Control Register 172
8.2.27 HOCOUTCR : HOCO User Trimming Control Register 173
8.2.28 CANFDCKDIVCR : CANFD Clock Division Control Register 173
8.2.29 CANFDCKCR : CANFD Clock Control Register 174
8.3 Main Clock Oscillator 175
8.3.1 Connecting a Crystal Resonator 175
8.3.2 External Clock Input 176
8.3.3 Notes on External Clock Input 176
8.4 Sub-Clock Oscillator 176
8.4.1 Connecting a 32.768-kHz Crystal Resonator 176
8.4.2 External Clock Input 177
8.4.3 Notes on the External Clock Input 177
8.4.4 Pin Handling When the Sub-Clock Oscillator Is Not Used 177
8.5 Oscillation Stop Detection Function 178
8.5.1 Oscillation Stop Detection and Operation after Detection 178
8.5.2 Oscillation Stop Detection Interrupts 179
8.5.3 Sub Clock Oscillation Stop Detection Function 180
8.5.4 Sub-clock Oscillation Stop Detection Interrupts 181
8.6 PLL Circuit 181
8.7 PLL_RTC Circuit 182
8.8 Internal Clock 182
8.8.1 System Clock (ICLK) 183
8.8.2 Peripheral Module Clock (PCLKA, PCLKB, PCLKC, PCLKD) 184
8.8.3 FlashIF Clock (FCLK) 184
8.8.4 CANFD Clock (CANFDCLK) 185
8.8.5 CAN Clock (CANMCLK) 185
8.8.6 CAC Clock (CACCLK) 185
8.8.7 RTC-Dedicated Clock (RTCSCLK, RTCS128CLK, RTCPLLCLK) 185
8.8.8 IWDT-Dedicated Clock (IWDTCLK) 185
8.8.9 AGT-Dedicated Clock (AGTSCLK, AGTLCLK) 185
8.8.10 SysTick Timer-Dedicated Clock (SYSTICCLK) 185
8.8.11 Segment LCD Source Clock (LCDSRCCLK) 185

8.8.12 UARTA Clock (UARTAMCLK, UARTASCLK, UARTALCLK, UARTAHCLK, UARTAMOCLK) 186
8.8.13 External Pin Output Clock (CLKOUT) 186
8.8.14 Serial Wire Debugger Clock (SWCLK) 186
8.9 Usage Notes 186
8.9.1 Notes on Clock Generation Circuit 186
8.9.2 Notes on Resonator 186
8.9.3 Notes on Board Design 186
8.9.4 Notes on Resonator Connect Pin 187
9. Clock Frequency Accuracy Measurement Circuit (CAC) 188
9.1 Overview 188
9.2 Register Descriptions 189
9.2.1 CACR0 : CAC Control Register 0 189
9.2.2 CACR1 : CAC Control Register 1 190
9.2.3 CACR2 : CAC Control Register 2 190
9.2.4 CAICR : CAC Interrupt Control Register 191
9.2.5 CASTR : CAC Status Register 192
9.2.6 CAULVR : CAC Upper-Limit Value Setting Register 193
9.2.7 CALLVR : CAC Lower-Limit Value Setting Register 193
9.2.8 CACNTBR : CAC Counter Buffer Register 194
9.3 Operation 194
9.3.1 Measuring Clock Frequency 194
9.3.2 Digital Filtering of Signals on CACREF Pin 196
9.4 Interrupt Requests 196
9.5 Usage Notes 196
9.5.1 Settings for the Module-Stop Function 196
10. Low Power Modes 197
10.1 Overview 197
10.2 Register Descriptions 200
10.2.1 LPMSAR : Low Power Mode Security Attribution Register 200
10.2.2 SBYCR : Standby Control Register 201
10.2.3 MSTPCRA : Module Stop Control Register A 202
10.2.4 MSTPCRB : Module Stop Control Register B 203
10.2.5 MSTPCRC : Module Stop Control Register C 204
10.2.6 MSTPCRD : Module Stop Control Register D 205
10.2.7 MSTPCRE : Module Stop Control Register E 206
10.2.8 OPCCR : Operating Power Control Register 207
10.2.9 SOPCCR : Sub Operating Power Control Register 208
10.2.10 SNZCR : Snooze Control Register 209
10.2.11 SNZEDCR0 : Snooze End Control Register 0 210
10.2.12 SNZREQCR0 : Snooze Request Control Register 0 211
10.2.13 PSMCR : Power Save Memory Control Register 213
10.2.14 SRMPSCR : SRAM Power State Control Register 214
10.2.15 SYOCDCR : System Control OCD Control Register 216
10.2.16 LDOCR : LDO Control Register 217
10.3 Reducing Power Consumption by Switching Clock Signals 217
10.4 Module-Stop Function 217

10.5 Function for Lower Operating Power Consumption 217
10.5.1 Operating Range 217
10.5.2 Setting Operating Power Control Mode 219
10.5.3 Operating Power Control Mode Change Procedure 220
10.5.4 Specific Procedure for Low Power Mode Transition 224
10.6 Sleep Mode 224
10.6.1 Transitioning to Sleep Mode 224
10.6.2 Canceling Sleep Mode 225
10.7 Software Standby Mode 225
10.7.1 Transitioning to Software Standby Mode 225
10.7.2 Canceling Software Standby Mode 226
10.7.3 Example of Software Standby Mode Application 227
10.8 Snooze Mode 228
10.8.1 Transition to Snooze Mode 228
10.8.2 Canceling Snooze Mode 229
10.8.3 Returning to Software Standby Mode from Snooze Mode 229
10.8.4 Snooze Operation Example 231
10.9 Usage Notes 235
10.9.1 Register Access 235
10.9.2 I/O Port Pin States 236
10.9.3 Module-Stop State of DTC, DMAC 236
10.9.4 Internal Interrupt Sources 236
10.9.5 Transitioning to Low Power Modes 236
10.9.6 Timing of WFI Instruction 237
10.9.7 Writing to the WDT/IWDT Registers by DTC or DMAC in Sleep Mode or Snooze Mode 237
10.9.8 Oscillators in Snooze Mode 237
10.9.9 Snooze Mode Entry by RXD0 Falling Edge 237
10.9.10 Using UART of SCI0 in Snooze Mode 237
10.9.11 Conditions of A/D Conversion Start in Snooze Mode 237
10.9.12 ELC Events in Snooze Mode 237
10.9.13 Module-Stop Function of A/D Converter 238
10.9.14 Module-Stop Bit Write Timing 238
10.9.15 Sleep-on-exit Function 238
10.9.16 Interruption During the Transition to Low Power Modes 238
11. Register Write Protection 241
11.1 Overview 241
11.2 Register Descriptions 241
11.2.1 PRCR : Protect Register 241
12. Interrupt Controller Unit (ICU) 243
12.1 Overview 243
12.2 Register Descriptions 244
12.2.1 ICUSARA : Interrupt Controller Unit Security Attribution Register A 245
12.2.2 ICUSARB : Interrupt Controller Unit Security Attribution Register B 245
12.2.3 ICUSARC : Interrupt Controller Unit Security Attribution Register C 246
12.2.4 ICUSARD : Interrupt Controller Unit Security Attribution Register D 247
12.2.5 ICUSARE : Interrupt Controller Unit Security Attribution Register E 247

12.2.6 ICUSARF : Interrupt Controller Unit Security Attribution Register F 248
12.2.7 ICUSARG : Interrupt Controller Unit Security Attribution Register G 249
12.2.8 ICUSARH : Interrupt Controller Unit Security Attribution Register H 249
12.2.9 ICUSARM : Interrupt Controller Unit Security Attribution Register M 250
12.2.10 IRQCRi : IRQ Control Register i (i = 0 to 15) 250
12.2.11 NMISR : Non-Maskable Interrupt Status Register 252
12.2.12 NMIER : Non-Maskable Interrupt Enable Register 254
12.2.13 NMICLR : Non-Maskable Interrupt Status Clear Register 256
12.2.14 NMICR : NMI Pin Interrupt Control Register 258
12.2.15 IELSRn : ICU Event Link Setting Register n (n = 0 to 63) 259
12.2.16 DELSRn : DMAC Event Link Setting Register n (n = 0 to 7) 260
12.2.17 SELSR0 : SYS Event Link Setting Register 261
12.2.18 WUPEN0 : Wake Up Interrupt Enable Register 0 262
12.2.19 WUPEN1 : Wake Up Interrupt Enable Register 1 263
12.2.20 WUPEN2 : Wake Up Interrupt Enable Register 2 263
12.3 Vector Table 264
12.3.1 Interrupt Vector Table 264
12.3.2 Event Number 266
12.4 Interrupt Operation 272
12.4.1 Detecting Interrupts 272
12.5 Interrupt Setting Procedure 273
12.5.1 Enabling Interrupt Requests 273
12.5.2 Disabling Interrupt Requests 273
12.5.3 Polling for Interrupts 273
12.5.4 Selecting Interrupt Request Destinations 273
12.5.5 Digital Filter 275
12.5.6 External Pin Interrupts 276
12.6 Non-Maskable Interrupt Operation 276
12.6.1 Correspondence to TrustZone-M by NMI 277
12.7 Return from Low Power Modes 278
12.7.1 Return from Sleep Mode 278
12.7.2 Return from Software Standby Mode 279
12.7.3 Return from Snooze Mode 279
12.8 Using the WFI Instruction with Non-Maskable Interrupts 279
12.9 Reference 279
13. Buses 280
13.1 Overview 280
13.2 Description of Buses 281
13.2.1 Arbitration 281
13.2.2 Parallel Operation 281
13.2.3 Restrictions 282
13.3 Register Descriptions 282
13.3.1 BUSSARA : BUS Security Attribution Register A 282
13.3.2 BUSSARB : BUS Security Attribution Register B 283
13.3.3 BUSSCNT<slave> : Slave Bus Control Register (<slave> = FHBIU, FLBIU, S0BIU, EQBIU) 284
13.3.4 BUSSCNT<slave> : Slave Bus Control Register (<slave> = PSBIU, PLBIU, PHBIU) 284

13.3.5 BUSnERRADD : BUS Error Address Register (n = 1 to 3) 285
13.3.6 BUSnERRRW : BUS Error Read Write Register (n = 1 to 3) 285
13.3.7 BTZFnERRADD : BUS TZF Error Address Register (n = 1 to 3) 286
13.3.8 BTZFnERRRW : BUS TZF Error Read Write Register (n = 1 to 3) 287
13.3.9 BUSnERRSTAT : BUS Error Status Register n (n = 1 to 3) 287
13.3.10 DMACDTCERRSTAT : DMAC/DTC Error Status Register 289
13.3.11 BUSnERRCLR : BUS Error Clear Register n (n = 1 to 3) 289
13.3.12 DMACDTCERRCLR : DMAC/DTC Error Clear Register 290
13.4 Bus Error Monitoring Section 290
13.4.1 Bus Error Types 290
13.4.2 Operations When a Bus Error Occurs 290
13.4.3 Conditions Leading to Illegal Address Access Errors 292
13.4.4 Time-out 293
13.5 References 293
13.6 Cache 293
13.6.1 Overview 293
13.6.2 Register Description 295
13.6.3 Operation 300
13.6.4 Usage Notes 304
14. Memory Protection Unit (MPU) 306
14.1 Overview 306
14.2 Arm MPU 306
14.3 Bus Master MPU 306
14.3.1 Register Descriptions 307
14.3.2 Operation 315
14.4 References 318
15. DMA Controller (DMAC) 319
15.1 Overview 319
15.2 Register Descriptions 321
15.2.1 DMACSAR : DMAC Controller Security Attribution Register 321
15.2.2 DMSAR : DMA Source Address Register 321
15.2.3 DMSRR : DMA Source Reload Address Register 322
15.2.4 DMDAR : DMA Destination Address Register 322
15.2.5 DMDRR : DMA Destination Reload Address Register 322
15.2.6 DMCRA : DMA Transfer Count Register 323
15.2.7 DMCRB : DMA Block Transfer Count Register 324
15.2.8 DMTMD : DMA Transfer Mode Register 325
15.2.9 DMINT : DMA Interrupt Setting Register 326
15.2.10 DMAMD : DMA Address Mode Register 327
15.2.11 DMOFR : DMA Offset Register 330
15.2.12 DMCNT : DMA Transfer Enable Register 330
15.2.13 DMREQ : DMA Software Start Register 331
15.2.14 DMSTS : DMA Status Register 332
15.2.15 DMSBS : DMA Source Buffer Size Register 333
15.2.16 DMDBS : DMA Destination Buffer Size Register 334
15.2.17 DMAST : DMA Module Activation Register 335

15.2.18 DMECHR : DMAC Error Channel Register 336
15.3 Operation 337
15.3.1 Transfer Mode 337
15.3.2 Extended Repeat Area Function 346
15.3.3 Free-running Function 348
15.3.4 Address Update Function using Offset 349
15.3.5 Address Update Function in Repeat-Block Transfer Mode 354
15.3.6 Example of Using Repeat-Block Transfer Mode 356
15.3.7 Activation Sources 359
15.3.8 Operation Timing 359
15.3.9 DMAC Execution Cycles 360
15.3.10 Activating the DMAC 361
15.3.11 Starting DMA Transfer 363
15.3.12 Registers during DMA Transfer 363
15.3.13 Channel Priority 364
15.3.14 Channel Security 364
15.3.15 Master TrustZone Filter in DMAC 365
15.4 Ending DMA Transfer 366
15.4.1 Transfer End by Completion of Specified Total Number of Transfer Operations 366
15.4.2 Transfer End by Repeat Size End Interrupt 366
15.4.3 Transfer End by Interrupt on Extended Repeat Area Overflow 367
15.5 Processing on DMA Transfer Error 367
15.5.1 Processing on NMI handler 367
15.5.2 Processing on Error response detection interrupt request (DMA_TRANSERR) handler 370
15.6 Interrupts 376
15.6.1 Transfer End Interrupt 376
15.6.2 Transfer Error Interrupt 378
15.7 Event Link 379
15.8 Low-Power Consumption Function 379
15.9 Usage Notes 379
15.9.1 Access to the Registers during DMA Transfer 379
15.9.2 DMA Transfer to Reserved Areas 380
15.9.3 Setting of DMAC Event Link Setting Register of the Interrupt Controller Unit (ICU.DELSRn n = 0 to 7) 380
15.9.4 Suspending or Restarting DMAC Activation 380
15.9.5 Precautions for Resuming DMA Transfer 380
16. Data Transfer Controller (DTC) 382
16.1 Overview 382
16.2 Register Descriptions 383
16.2.1 DTCSAR : DTC Controller Security Attribution Register 384
16.2.2 MRA : DTC Mode Register A 384
16.2.3 MRB : DTC Mode Register B 385
16.2.4 SAR : DTC Transfer Source Register 386
16.2.5 DAR : DTC Transfer Destination Register 386
16.2.6 CRA : DTC Transfer Count Register A 387
16.2.7 CRB : DTC Transfer Count Register B 387
16.2.8 DTCCR : DTC Control Register 388

16.2.9 DTCCR_SEC : DTC Control Register for Secure Region 388
16.2.10 DTCVBR : DTC Vector Base Register 389
16.2.11 DTCVBR_SEC : DTC Vector Base Register for Secure Region 389
16.2.12 DTCST : DTC Module Start Register 389
16.2.13 DTCSTS : DTC Status Register 390
16.2.14 DTEVR : DTC Error Vector Register 391
16.3 Activation Sources 392
16.3.1 Allocating Transfer Information and DTC Vector Table 392
16.4 Operation 394
16.4.1 Transfer Information Read Skip Function 396
16.4.2 Transfer Information Write-Back Skip Function 396
16.4.3 Normal Transfer Mode 397
16.4.4 Repeat Transfer Mode 398
16.4.5 Block Transfer Mode 399
16.4.6 Chain Transfer 400
16.4.7 Operation Timing 401
16.4.8 Execution Cycles of DTC 403
16.4.9 DTC Bus Mastership Release Timing 404
16.4.10 Vector Security 404
16.4.11 Master TrustZone Filter in DTC 404
16.5 DTC Setting Procedure 404
16.6 Examples of DTC Usage 405
16.6.1 Normal Transfer 405
16.6.2 Chain Transfer 406
16.6.3 Chain Transfer when Counter = 0 407
16.7 Processing on DTC Transfer Error 409
16.7.1 Processing on NMI handler 410
16.7.2 Processing on Error response detection interrupt request (DMA_TRANSERR) handler 413
16.8 Interrupt 419
16.8.1 Interrupt Request of Transfer End 419
16.8.2 Interrupt Request of Transfer Error 419
16.9 Event Link 420
16.10 Low Power Consumption Function 420
16.11 Usage Notes 421
16.11.1 Transfer Information Start Address 421
17. Event Link Controller (ELC) 422
17.1 Overview 422
17.2 Register Descriptions 423
17.2.1 ELCR : Event Link Controller Register 423
17.2.2 ELSEGRn : Event Link Software Event Generation Register n (n = 0, 1) 424
17.2.3 ELSRn : Event Link Setting Register n (n = 0 to 9, 14 to 17) 425
17.2.4 ELCSARA : Event Link Controller Security Attribution Register A 430
17.2.5 ELCSARB : Event Link Controller Security Attribution Register B 430
17.2.6 ELCSARC : Event Link Controller Security Attribution Register C 431
17.3 Operation 431
17.3.1 Relation between Interrupt Handling and Event Linking 431
17.3.2 Linking Events 431

17.3.3 Example of Procedure for Linking Events 432
17.4 Usage Notes 432
17.4.1 Linking DMAC/DTC Transfer End Signals as Events 432
17.4.2 Setting Clocks 432
17.4.3 Module-Stop Function Setting 432
17.4.4 ELC Delay Time 432
18. I/O Ports 434
18.1 Overview 434
18.2 Register Descriptions 435
18.2.1 PCNTR1/PODR/PDR : Port Control Register 1 435
18.2.2 PCNTR2/EIDR/PIDR : Port Control Register 2 436
18.2.3 PCNTR3/PORR/POSR : Port Control Register 3 437
18.2.4 PCNTR4/EORR/EOSR : Port Control Register 4 438
18.2.5 PmnPFS/PmnPFS_HA/PmnPFS_BY : Port mn Pin Function Select Register (m = 0 to 8, n = 00 to 15) 439
18.2.6 PWPR : Write-Protect Register 441
18.2.7 PWPRS : Write-Protect Register for Secure 442
18.2.8 PRWCNTR : Set Wait Control Register 442
18.2.9 PmSAR : Port Security Attribution Register (m = 0 to 8) 443
18.2.10 PSAR : PORT Security Attribution Register 443
18.3 Operation 444
18.3.1 General I/O Ports 444
18.3.2 Port Function Select 444
18.3.3 Port Group Function for ELC 444
18.3.4 Wait Function for Port Read 446
18.4 Handling of Unused Pins 446
18.5 Usage Notes 447
18.5.1 Procedure for Specifying the Pin Functions 447
18.5.2 Procedure for Using Port Group Input 447
18.5.3 Port Output Data Register (PODR) Summary 448
18.5.4 Notes on Using Analog Functions 448
18.5.5 Notes on Using EXLVD Functions 448
18.5.6 Notes on Using EXLVDVBAT Functions 448
18.6 Peripheral Select Settings for Each Product 448
19. Port Output Enable for GPT (POEG) 453
19.1 Overview 453
19.2 Register Descriptions 455
19.2.1 POEGGn : POEG Group n Setting Register (n = A to D) 455
19.3 Output-Disable Control Operation 456
19.3.1 Pin Input Level Detection Operation 456
19.3.2 Output-Disable Requests from the GPT 457
19.3.3 Output-Disable Control Using Detection of Stopped Oscillation 457
19.3.4 Output-Disable Control Using Registers 457
19.3.5 Release from Output-Disable 457
19.4 Interrupt Sources 458
19.5 External Trigger Output to the GPT 458
19.6 Usage Notes 459

19.6.1 Transition to Software Standby Mode 459
19.6.2 Specifying Pins Associated with the GPT 459
20. General PWM Timer (GPT) 460
20.1 Overview 460
20.2 Register Descriptions 463
20.2.1 GTWP : General PWM Timer Write-Protection Register 463
20.2.2 GTSTR : General PWM Timer Software Start Register 465
20.2.3 GTSTP : General PWM Timer Software Stop Register 466
20.2.4 GTCLR : General PWM Timer Software Clear Register 467
20.2.5 GTSSR : General PWM Timer Start Source Select Register 467
20.2.6 GTPSR : General PWM Timer Stop Source Select Register 471
20.2.7 GTCSR : General PWM Timer Clear Source Select Register 474
20.2.8 GTUPSR : General PWM Timer Up Count Source Select Register 477
20.2.9 GTDNSR : General PWM Timer Down Count Source Select Register 480
20.2.10 GTICASR : General PWM Timer Input Capture Source Select Register A 484
20.2.11 GTICBSR : General PWM Timer Input Capture Source Select Register B 487
20.2.12 GTCR : General PWM Timer Control Register 490
20.2.13 GTUDDTYC : General PWM Timer Count Direction and Duty Setting Register 492
20.2.14 GTIOR : General PWM Timer I/O Control Register 494
20.2.15 GTINTAD : General PWM Timer Interrupt Output Setting Register 498
20.2.16 GTST : General PWM Timer Status Register 499
20.2.17 GTBER : General PWM Timer Buffer Enable Register 503
20.2.18 GTCNT : General PWM Timer Counter 504
20.2.19 GTCCRk : General PWM Timer Compare Capture Register k (k = A to F) 505
20.2.20 GTPR : General PWM Timer Cycle Setting Register 505
20.2.21 GTPBR : General PWM Timer Cycle Setting Buffer Register 505
20.2.22 GTDTCR : General PWM Timer Dead Time Control Register 506
20.2.23 GTDVU : General PWM Timer Dead Time Value Register U 507
20.2.24 GTICLF : General PWM Timer Inter Channel Logical Operation Function Setting Register 507
20.2.25 GTPC : General PWM Timer Period Count Register 509
20.2.26 GTSECSR : General PWM Timer Operation Enable Bit Simultaneous Control Channel Select Register 510
20.2.27 GTSECR : General PWM Timer Operation Enable Bit Simultaneous Control Register 511
20.2.28 OPSCR : Output Phase Switching Control Register 512
20.3 Operation 515
20.3.1 Basic Operation 515
20.3.2 Buffer Operation 523
20.3.3 PWM Output Operating Mode 530
20.3.4 Automatic Dead Time Setting Function 540
20.3.5 Count Direction Changing Function 544
20.3.6 Function of Output Duty 0% and 100% 545
20.3.7 Hardware Count Start/Count Stop and Clear Operation 546
20.3.8 Synchronized Operation 551
20.3.9 PWM Output Operation Examples 556
20.3.10 Period Count Function 562
20.3.11 Phase Counting Function 563

20.3.12 Output Phase Switching (GPT_OPS) 573
20.3.13 Inter Channel Logical Operation Function 580
20.4 Interrupt Sources 582
20.4.1 Interrupt Sources 582
20.4.2 DMAC and DTC Activation 584
20.5 Operations Linked by ELC 584
20.5.1 Event Signal Output to ELC 584
20.5.2 Event Signal Inputs from ELC 584
20.6 Noise Filter Function 584
20.7 Protection Function 585
20.7.1 Write-Protection for Registers 585
20.7.2 Disabling of Buffer Operation 585
20.7.3 GTIOCnm Pin Output Negate Control (n = 0 to 5, m = A, B) 587
20.8 Initialization Method of Output Pins 588
20.8.1 Pin Settings after Reset 588
20.8.2 Pin Initialization Due to Error during Operation 589
20.9 Usage Notes 589
20.9.1 Module-Stop Function Setting 589
20.9.2 GTCCRn Settings during Compare Match Operation (n = A to F) 589
20.9.3 Setting Range for GTCNT Counter 590
20.9.4 Starting and Stopping the GTCNT Counter 590
20.9.5 Priority Order of Each Event 590
21. Low Power Asynchronous General Purpose Timer (AGTW) 592
21.1 Overview 592
21.2 Register Descriptions 593
21.2.1 AGT : AGT Counter Register 593
21.2.2 AGTCMA : AGT Compare Match A Register 594
21.2.3 AGTCMB : AGT Compare Match B Register 594
21.2.4 AGTCR : AGT Control Register 595
21.2.5 AGTMR1 : AGT Mode Register 1 596
21.2.6 AGTMR2 : AGT Mode Register 2 597
21.2.7 AGTIOC : AGT I/O Control Register 598
21.2.8 AGTISR : AGT Event Pin Select Register 600
21.2.9 AGTCMSR : AGT Compare Match Function Select Register 600
21.2.10 AGTIOSEL : AGT Pin Select Register 601
21.3 Operation 601
21.3.1 Reload Register and Counter Rewrite Operation 601
21.3.2 Reload Register and AGT Compare Match A/B Register Rewrite Operation 603
21.3.3 Timer Mode 604
21.3.4 Pulse Output Mode 605
21.3.5 Event Counter Mode 606
21.3.6 Pulse Width Measurement Mode 607
21.3.7 Pulse Period Measurement Mode 608
21.3.8 Compare Match function 609
21.3.9 Output Settings for Each Mode 610
21.3.10 Standby Mode 612
21.3.11 Interrupt Sources 612

21.3.12 Event Signal Output to ELC 613
21.4 Usage Notes 613
21.4.1 Count Operation Start and Stop Control 613
21.4.2 Access to Counter Register 613
21.4.3 When Changing Mode 613
21.4.4 Output pin setting 614
21.4.5 Digital Filter 614
21.4.6 How to Calculate Event Number, Pulse Width, and Pulse Period 614
21.4.7 When Count is Forcibly Stopped by TSTOP Bit 614
21.4.8 When Selecting AGT0 Underflow as the Count Source 614
21.4.9 Module-stop function 614
21.4.10 When Switching Source Clock 615
22. Realtime Clock (RTC) 616
22.1 Overview 616
22.2 Register Descriptions 617
22.2.1 R64CNT : 64-Hz Counter 619
22.2.2 RSECCNT : Second Counter (in Calendar Count Mode) 620
22.2.3 RMINCNT : Minute Counter (in Calendar Count Mode) 620
22.2.4 RHRCNT : Hour Counter (in Calendar Count Mode) 621
22.2.5 RWKCNT : Day-of-Week Counter (in Calendar Count Mode) 621
22.2.6 BCNTn : Binary Counter n (n = 0 to 3) (in Binary Count Mode) 622
22.2.7 RDAYCNT : Day Counter 622
22.2.8 RMONCNT : Month Counter 623
22.2.9 RYRCNT : Year Counter 623
22.2.10 RSECAR : Second Alarm Register (in Calendar Count Mode) 624
22.2.11 RMINAR : Minute Alarm Register (in Calendar Count Mode) 624
22.2.12 RHRAR : Hour Alarm Register (in Calendar Count Mode) 625
22.2.13 RWKAR : Day-of-Week Alarm Register (in Calendar Count Mode) 626
22.2.14 BCNTnAR : Binary Counter n Alarm Register (n = 0 to 3) (in Binary Count Mode) 626
22.2.15 RDAYAR : Date Alarm Register (in Calendar Count Mode) 627
22.2.16 RMONAR : Month Alarm Register (in Calendar Count Mode) 627
22.2.17 RYRAR : Year Alarm Register (in Calendar Count Mode) 628
22.2.18 RYRAREN : Year Alarm Enable Register (in Calendar Count Mode) 629
22.2.19 BCNTnAER : Binary Counter n Alarm Enable Register (n = 0, 1) (in Binary Count Mode) 629
22.2.20 BCNT2AER : Binary Counter 2 Alarm Enable Register (in Binary Count Mode) 630
22.2.21 BCNT3AER : Binary Counter 3 Alarm Enable Register (in Binary Count Mode) 630
22.2.22 RCR1 : RTC Control Register 1 630
22.2.23 RCR2 : RTC Control Register 2 (in Calendar Count Mode) 631
22.2.24 RCR2 : RTC Control Register 2 (in Binary Count Mode) 633
22.2.25 RCR4 : RTC Control Register 4 635
22.2.26 RADJ : Time Error Adjustment Register 636
22.2.27 RADJ2 : Time Error Adjustment Register 2 636
22.2.28 RTCCR0 : Time Capture Control Register 0 637
22.2.29 RSECCP0 : Second Capture Register 0 (in Calendar Count Mode) 638
22.2.30 RMINCP0 : Minute Capture Register 0 (in Calendar Count Mode) 639
22.2.31 RHRCP0 : Hour Capture Register 0 (in Calendar Count Mode) 639
22.2.32 RDAYCP0 : Date Capture Register 0 (in Calendar Count Mode) 640

22.2.33 RMONCP0 : Month Capture Register 0 (in Calendar Count Mode) 640
22.2.34 BCNTnCP0 : BCNTn Capture Register 0 (n= 0 to 3) (in Binary Count Mode) 641
22.3 Operation 641
22.3.1 Outline of Initial Settings of Registers after Power On 641
22.3.2 Operation Mode, Clock and Count Mode Setting Procedure 641
22.3.3 Setting the Time 643
22.3.4 30-Second Adjustment 644
22.3.5 Reading 64-Hz Counter and Time 645
22.3.6 Alarm Function 647
22.3.7 Procedure for Disabling Alarm Interrupt 648
22.3.8 Time Error Adjustment Function 648
22.3.9 Capturing the time 652
22.4 Interrupt Sources 652
22.5 Event Link Output 654
22.5.1 Interrupt Handling and Event Linking 654
22.6 Usage Notes 654
22.6.1 Register Writing during Counting 654
22.6.2 Use of Periodic Interrupts 655
22.6.3 RTCOUT (1-Hz/64-Hz) Clock Output 655
22.6.4 Transitions to Low Power Modes after Setting Registers 657
22.6.5 Notes on Writing to and Reading from Registers 657
22.6.6 Changing the Count Mode 657
22.6.7 Time Capture Operation While Count Operation is Stopped 657
22.6.8 Initialization Procedure When the RTC Is Not to Be Used 657
23. Watchdog Timer (WDT) 659
23.1 Overview 659
23.2 Register Descriptions 660
23.2.1 WDTRR : WDT Refresh Register 660
23.2.2 WDTCR : WDT Control Register 661
23.2.3 WDTSR : WDT Status Register 663
23.2.4 WDTRCR : WDT Reset Control Register 664
23.2.5 WDTCSTPR : WDT Count Stop Control Register 665
23.2.6 Option Function Select Register 0 (OFS0) 665
23.3 Operation 665
23.3.1 Count Operation in each Start Mode 665
23.3.2 Controlling Writes to the WDTCR, WDTRCR, and WDTCSTPR Registers 669
23.3.3 Refresh Operation 669
23.3.4 Status Flags 670
23.3.5 Reset Output 670
23.3.6 Interrupt Sources 670
23.3.7 Reading the Down-Counter Value 671
23.3.8 Association between Option Function Select Register 0 (OFS0) and WDT Registers 671
23.4 Output to the Event Link Controller (ELC) 672
23.5 Usage Notes 672
23.5.1 ICU Event Link Setting Register n (IELSRn) Setting 672
24. Independent Watchdog Timer (IWDT) 673

24.1 Overview ... 673
24.2 Register Descriptions ... 674
24.2.1 IWDTRR : IWDT Refresh Register ... 674
24.2.2 IWDTSR : IWDT Status Register ... 675
24.2.3 OFS0 : Option Function Select Register 0 ... 676
24.3 Operation ... 678
24.3.1 Auto Start Mode ... 678
24.3.2 Refresh Operation ... 679
24.3.3 Status Flags ... 680
24.3.4 Reset Output ... 681
24.3.5 Interrupt Sources ... 681
24.3.6 Reading the Down-Counter Value ... 681
24.4 Output to the Event Link Controller (ELC) ... 681
24.5 Usage Notes ... 682
24.5.1 Refresh Operations ... 682
24.5.2 Clock Division Ratio Setting ... 682
24.5.3 Constraints on the ICU Event Link Setting Register n (IELSRn) Setting ... 682
25. Serial Communications Interface (SCI) ... 683
25.1 Overview ... 683
25.2 Register Descriptions ... 689
25.2.1 RSR : Receive Shift Register ... 689
25.2.2 RDR : Receive Data Register ... 689
25.2.3 RDRHL : Receive Data Register for Non-Manchester Mode (MMR.MANEN = 0) ... 690
25.2.4 RDRHL_MAN : Receive Data Register for Manchester Mode (MMR.MANEN = 1) ... 690
25.2.5 FRDRHL/FRDRH/FRDRL : Receive FIFO Data Register ... 691
25.2.6 TDR : Transmit Data Register ... 692
25.2.7 TDRHL : Transmit Data Register for Non-Manchester Mode (MMR.MANEN = 0) ... 693
25.2.8 TDRHL_MAN : Transmit Data Register for Manchester Mode (MMR.MANEN = 1) ... 693
25.2.9 FTDRHL/FTDRH/FTDRL : Transmit FIFO Data Register ... 694
25.2.10 TSR : Transmit Shift Register ... 695
25.2.11 SMR : Serial Mode Register for Non-Smart Card Interface Mode (SCMR.SMIF = 0) ... 695
25.2.12 SMR_SMCI : Serial Mode Register for Smart Card Interface Mode (SCMR.SMIF = 1) ... 696
25.2.13 SCR : Serial Control Register for Non-Smart Card Interface Mode (SCMR.SMIF = 0) ... 698
25.2.14 SCR_SMCI : Serial Control Register for Smart Card Interface Mode (SCMR.SMIF = 1) ... 700
25.2.15 SSR : Serial Status Register for Non-Smart Card Interface and Non-FIFO Mode (SCMR.SMIF = 0, FCR.FM = 0, and MMR.MANEN = 0) ... 701
25.2.16 SSR_FIFO : Serial Status Register for Non-Smart Card Interface and FIFO Mode (SCMR.SMIF = 0, FCR.FM = 1, and MMR.MANEN = 0) ... 703
25.2.17 SSR_SMCI : Serial Status Register for Smart Card Interface Mode (SCMR.SMIF = 1, and MMR.MANEN = 0) ... 706
25.2.18 SSR_MANC : Serial Status Register for Manchester Mode (SCMR.SMIF = 0, and MMR.MANEN = 1) ... 708
25.2.19 SCMR : Smart Card Mode Register ... 711
25.2.20 BRR : Bit Rate Register ... 712
25.2.21 MDDR : Modulation Duty Register ... 721
25.2.22 SEMR : Simple LIN Mode Register ... 724
25.2.23 SNFR : Noise Filter Setting Register ... 727

25.2.24 SIMR1 : IIC Mode Register 1 728
25.2.25 SIMR2 : IIC Mode Register 2 728
25.2.26 SIMR3 : IIC Mode Register 3 729
25.2.27 SISR : IIC Status Register 731
25.2.28 SPMR : SPI Mode Register 732
25.2.29 FCR : FIFO Control Register 733
25.2.30 FDR : FIFO Data Count Register 734
25.2.31 LSR : Line Status Register 735
25.2.32 CDR : Compare Match Data Register 736
25.2.33 DCCR : Data Compare Match Control Register 736
25.2.34 SPTR : Serial Port Register 738
25.2.35 ACTR : Adjustment Communication Timing Register 740
25.2.36 MMR : Manchester Mode Register 741
25.2.37 TMPR : Transmit Manchester Preface Setting Register 742
25.2.38 RMPR : Receive Manchester Preface Setting Register 743
25.2.39 MESR : Manchester Extended Error Status Register 744
25.2.40 MECR : Manchester Extended Error Control Register 745
25.2.41 ESMER : Simple LIN Mode Enable Register 746
25.2.42 CR0 : Control Register 0 747
25.2.43 CR1 : Control Register 1 747
25.2.44 CR2 : Control Register 2 748
25.2.45 CR3 : Control Register 3 749
25.2.46 PCR : Port Control Register 749
25.2.47 ICR : Interrupt Control Register 749
25.2.48 STR : Status Register 750
25.2.49 STCR : Status Clear Register 751
25.2.50 CF0DR : Control Field 0 Data Register 751
25.2.51 CF0CR : Control Field 0 Compare Enable Register 752
25.2.52 CF0RR : Control Field 0 Receive Data Register 752
25.2.53 PCF1DR : Primary Control Field 1 Data Register 753
25.2.54 SCF1DR : Secondary Control Field 1 Data Register 753
25.2.55 CF1CR : Control Field 1 Compare Enable Register 753
25.2.56 CF1RR : Control Field 1 Receive Data Register 754
25.2.57 TCR : Timer Control Register 754
25.2.58 TMR : Timer Mode Register 754
25.2.59 TPRE : Timer Prescaler Register 755
25.2.60 TCNT : Timer Count Register 755
25.2.61 SCIMSKEN : SCI5 TXD Output Mask Enable Register 756
25.3 Operation in Asynchronous Mode 756
25.3.1 Serial Data Transfer Format 757
25.3.2 Receive Data Sampling Timing and Reception Margin in Asynchronous Mode 758
25.3.3 Clock 759
25.3.4 Double-Speed Operation and Frequency of 6 Times the Bit Rate 759
25.3.5 CTS and RTS Functions 760
25.3.6 Address Match (Receive Data Match Detection) Function 760
25.3.7 SCI Initialization in Asynchronous Mode 762
25.3.8 Serial Data Transmission in Asynchronous Mode 764

25.3.9 Serial Data Reception in Asynchronous Mode 769
25.3.10 The function of adjust receive sampling timing (Asynchronous Mode) 782
25.3.11 The function of adjust transmit timing (Asynchronous Mode) 786
25.4 Multi-Processor Communication Function 791
25.4.1 Multi-Processor Serial Data Transmission 792
25.4.2 Multi-Processor Serial Data Reception 795
25.5 Operation in Manchester mode 800
25.5.1 Frame Format 801
25.5.2 Clock 805
25.5.3 Initialization of the SCI in Manchester Mode 805
25.5.4 Double-speed operation 806
25.5.5 CTS and RTS functions 806
25.5.6 Serial data transmission in Manchester mode 807
25.5.7 Serial Data Reception in Manchester Mode 810
25.5.8 Operation When Multi-Processor Bit Is Used 814
25.5.9 Receive Retiming 814
25.5.10 Polarity Setting for Manchester Code 815
25.5.11 Errors in Manchester Mode 816
25.6 Operation in Clock Synchronous Mode 821
25.6.1 Clock 821
25.6.2 CTS and RTS Functions 821
25.6.3 SCI Initialization in Clock Synchronous Mode 822
25.6.4 Serial Data Transmission in Clock Synchronous Mode 823
25.6.5 Serial Data Reception in Clock Synchronous Mode 827
25.6.6 Simultaneous Serial Data Transmission and Reception in Clock Synchronous Mode 832
25.7 Operation in Smart Card Interface Mode 835
25.7.1 Example Connection 835
25.7.2 Data Format (Except in Block Transfer Mode) 835
25.7.3 Block Transfer Mode 837
25.7.4 Receive Data Sampling Timing and Reception Margin 837
25.7.5 SCI Initialization (Smart Card Interface Mode) 838
25.7.6 Serial Data Transmission (Except in Block Transfer Mode) 839
25.7.7 Serial Data Reception (Except in Block Transfer Mode) 841
25.7.8 Clock Output Control 843
25.8 Operation in Simple IIC Mode 844
25.8.1 Generation of Start, Restart, and Stop Conditions 845
25.8.2 Clock Synchronization 846
25.8.3 SDAn Output Delay 847
25.8.4 SCI Initialization in Simple IIC Mode 847
25.8.5 Operation in Master Transmission in Simple IIC Mode 848
25.8.6 Master Reception in Simple IIC Mode 851
25.9 Operation in Simple SPI Mode 852
25.9.1 States of Pins in Master and Slave Modes 853
25.9.2 SS Function in Master Mode 854
25.9.3 SS Function in Slave Mode 854
25.9.4 Relationship between Clock and Transmit/Receive Data 854
25.9.5 SCI Initialization in Simple SPI Mode 855

25.9.6 Transmission and Reception of Serial Data in Simple SPI Mode 855
25.10 Bit Rate Modulation Function 855
25.11 Operation in Simple LIN Mode 856
25.11.1 Serial Transfer Protocol 856
25.11.2 Transmitting a Start Frame 857
25.11.3 Receiving a Start Frame 860
25.11.4 Detection of Bus Collisions 866
25.11.5 Digital Filter for Input on the RXDXn (n = 1) Pin 867
25.11.6 Bit Rate Measurement 868
25.11.7 Selectable Timing for Sampling Data Received through RXDXn (n = 1) 869
25.11.8 Timer 869
25.12 Interrupt Sources 871
25.12.1 Buffer Operation for SCIn_TXI and SCIn_RXI Interrupts (Non-FIFO Selected) 871
25.12.2 Buffer Operation for SCIn_TXI and SCIn_RXI Interrupts (FIFO Selected) 872
25.12.3 Interrupts in Asynchronous, Manchester, Clock Synchronous, and Simple SPI Modes 872
25.12.4 Interrupts in Smart Card Interface Mode 873
25.12.5 Interrupts in Simple IIC Mode 874
25.12.6 Interrupt Requests from the Simple LIN Mode Control Section 875
25.13 Event Linking 875
25.14 Address Non-match Event Output (SCI0_DCUF) 876
25.15 Noise Cancellation Function 876
25.16 Usage Notes 877
25.16.1 Settings for the Module-Stop Function 877
25.16.2 SCI Operation during Low Power State 877
25.16.3 Break Detection and Processing 882
25.16.4 Mark State and Production of Breaks 883
25.16.5 Receive Error Flags and Transmit Operation in Clock Synchronous Mode and Simple SPI Mode 883
25.16.6 Restrictions on Clock Synchronous Transmission in Clock Synchronous Mode and Simple SPI Mode 883
25.16.7 Restrictions on Using DTC or DMAC 884
25.16.8 Notes on Starting Transfer 885
25.16.9 External Clock Input in Clock Synchronous Mode and Simple SPI Mode 885
25.16.10 Limitations on Simple SPI Mode 885
25.16.11 Notes on Transmit Enable Bit (SCR.TE) 886
25.16.12 Limitation 1 on Usage of the Simple LIN Mode Control Section 886
25.16.13 Limitation 2 on Usage of the Simple LIN Mode Control Section 886
25.16.14 Note on Stopping Reception When Using the RTS Function in Asynchronous Mode 887
26. IrDA Interface (IrDA) 888
26.1 Overview 888
26.2 Register Descriptions 888
26.2.1 IRCR : IrDA Control Register 888
26.3 Operation 889
26.3.1 IrDA Interface Setup Procedure 889
26.3.2 Transmission 889
26.3.3 Reception 890
26.4 Usage Notes 890

26.4.1 Settings for the Module-Stop Function 890
26.4.2 Asynchronous Reference Clock for SCI5 890
27. I²C Bus Interface (IIC) 891
27.1 Overview 891
27.2 Register Descriptions 893
27.2.1 ICCR1 : I²C Bus Control Register 1 893
27.2.2 ICCR2 : I²C Bus Control Register 2 895
27.2.3 ICMR1 : I²C Bus Mode Register 1 898
27.2.4 ICMR2 : I²C Bus Mode Register 2 899
27.2.5 ICMR3 : I²C Bus Mode Register 3 900
27.2.6 ICFER : I²C Bus Function Enable Register 902
27.2.7 ICSER : I²C Bus Status Enable Register 903
27.2.8 ICIER : I²C Bus Interrupt Enable Register 905
27.2.9 ICSR1 : I²C Bus Status Register 1 906
27.2.10 ICSR2 : I²C Bus Status Register 2 908
27.2.11 ICWUR : I²C Bus Wakeup Unit Register 911
27.2.12 ICWUR2 : I²C Bus Wakeup Unit Register 2 912
27.2.13 SARLy : Slave Address Register L y (y = 0 to 2) 914
27.2.14 SARUy : Slave Address Register U y (y = 0 to 2) 914
27.2.15 ICBRL : I²C Bus Bit Rate Low-Level Register 915
27.2.16 ICBRH : I²C Bus Bit Rate High-Level Register 915
27.2.17 ICDRT : I²C Bus Transmit Data Register 917
27.2.18 ICDRR : I²C Bus Receive Data Register 917
27.2.19 ICDRS : I²C Bus Shift Register 917
27.3 Operation 917
27.3.1 Communication Data Format 917
27.3.2 Initial Settings 918
27.3.3 Master Transmit Operation 919
27.3.4 Master Receive Operation 923
27.3.5 Slave Transmit Operation 928
27.3.6 Slave Receive Operation 930
27.4 SCL Synchronization Circuit 932
27.5 SDA Output Delay Function 933
27.6 Digital Noise Filter Circuits 934
27.7 Address Match Detection 935
27.7.1 Slave-Address Match Detection 935
27.7.2 Detection of General Call Address 938
27.7.3 Device-ID Address Detection 939
27.7.4 Host Address Detection 940
27.8 Wakeup Function 941
27.8.1 Normal Wakeup Mode 1 942
27.8.2 Normal Wakeup Mode 2 945
27.8.3 Command Recovery Mode and EEP Response Mode (Special Wakeup Modes) 947
27.9 Automatic Low-Hold Function for SCL 950
27.9.1 Function to Prevent Wrong Transmission of Transmit Data 950

27.9.2 NACK Reception Transfer Suspension Function 951
27.9.3 Function to Prevent Failure to Receive Data 952
27.10 Arbitration-Lost Detection Functions 953
27.10.1 Master Arbitration-Lost Detection (MALE Bit) 953
27.10.2 Function to Detect Loss of Arbitration During NACK Transmission (NALE Bit) 955
27.10.3 Slave Arbitration-Lost Detection (SALE Bit) 956
27.11 Start, Restart, and Stop Condition Issuing Function 957
27.11.1 Issuing a Start Condition 957
27.11.2 Issuing a Restart Condition 957
27.11.3 Issuing a Stop Condition 959
27.12 Bus Hanging 959
27.12.1 Timeout Function 959
27.12.2 Extra SCL Clock Cycle Output Function 960
27.12.3 IIC Reset and Internal Reset 961
27.13 SMBus Operation 961
27.13.1 SMBus Timeout Measurement 962
27.13.2 Packet Error Code (PEC) 963
27.13.3 SMBus Host Notification Protocol (Notify ARP Master Command) 963
27.14 Interrupt Sources 963
27.14.1 Buffer Operation for IICn_TXI and IICn_RXI Interrupts 964
27.15 State of Registers When Issuing Each Condition 964
27.16 Event Link Output 965
27.16.1 Interrupt Handling and Event Linking 965
27.17 Usage Notes 966
27.17.1 Settings for the Module-Stop Function 966
27.17.2 Notes on Starting Transfer 966
28. Serial Interface UARTA (UARTA) 967
28.1 Overview 967
28.2 Register Descriptions 969
28.2.1 TXBAn : Transmit Buffer Register n (n = 0, 1) 969
28.2.2 RXBAn : Receive Buffer Register n (n = 0, 1) 969
28.2.3 ASIMAn0 : Operation Mode Setting Register n0 (n = 0, 1) 970
28.2.4 ASIMAn1 : Operation Mode Setting Register n1 (n = 0, 1) 971
28.2.5 BRGCAn : Baud Rate Generator Control Register n (n = 0, 1) 972
28.2.6 ASISAn : Status Register n (n = 0, 1) 972
28.2.7 ASCTAn : Status Clear Trigger Register n (n = 0, 1) 974
28.2.8 UTA0CK : UARTA Clock Select Register 0 974
28.2.9 UTA1CK : UARTA Clock Select Register 1 975
28.3 Operation 976
28.3.1 Operation Stop Mode 976
28.3.2 UART Mode 976
28.3.3 Receive Data Noise Filter 985
28.3.4 Baud Rate Generator 985
28.4 Usage Notes 990
28.4.1 Port Setting for RxDAn Pin 990
28.4.2 Point for Caution when Selecting the UARTAn Operation Clock (f_{UTAn}) 990

29. CAN with Flexible Data-rate (CANFD) ... 991
29.1 Overview ... 991
29.1.1 CANFD Module ... 991
29.1.2 Clock restriction ... 993
29.2 Register Descriptions ... 993
29.2.1 Register Table ... 993
29.2.2 CFDC0NCFG : Nominal Baud Rate Configuration Register ... 994
29.2.3 CFDC0CTR : Control Register ... 995
29.2.4 CFDC0STS : Status Register ... 999
29.2.5 CFDC0ERFL : Error Flag Register ... 1002
29.2.6 CFDC0DCFG : Data Baud Rate Configuration Register ... 1007
29.2.7 CFDC0FDCFG : CANFD Configuration Register ... 1009
29.2.8 CFDC0FDCTR : CANFD Control Register ... 1011
29.2.9 CFDC0FDSTS : CANFD Status Register ... 1012
29.2.10 CFDC0FDCRC : CANFD CRC Register ... 1014
29.2.11 CFDGCFG : Global Configuration Register ... 1015
29.2.12 CFDGCTR : Global Control Register ... 1017
29.2.13 CFDGSTS : Global Status Register ... 1018
29.2.14 CFDGERFL : Global Error Flag Register ... 1019
29.2.15 CFDGTINTSTS : Global TX Interrupt Status Register ... 1021
29.2.16 CFDGTSC : Global Timestamp Counter Register ... 1022
29.2.17 CFDGAFLECTR : Global Acceptance Filter List Entry Control Register ... 1023
29.2.18 CFDGAFLCFG : Global Acceptance Filter List Configuration Register ... 1023
29.2.19 CFDGAFLIDr : Global Acceptance Filter List ID Registers (r = 1 to 16) ... 1024
29.2.20 CFDGAFLMr : Global Acceptance Filter List Mask Registers (r = 1 to 16) ... 1025
29.2.21 CFDGAFLP0r : Global Acceptance Filter List Pointer 0 Registers (r = 1 to 16) ... 1026
29.2.22 CFDGAFLP1r : Global Acceptance Filter List Pointer 1 Registers (r = 1 to 16) ... 1028
29.2.23 CFDRMNB : RX Message Buffer Number Register ... 1029
29.2.24 CFDRMND : RX Message Buffer New Data Register ... 1029
29.2.25 CFDRFCCa : RX FIFO Configuration/Control Registers a (a = 0 to 1) ... 1030
29.2.26 CFDRFSTSa : RX FIFO Status Registers a (a = 0 to 1) ... 1032
29.2.27 CFDRFPCTRa : RX FIFO Pointer Control Registers a (a = 0 to 1) ... 1033
29.2.28 CFDCFCC : Common FIFO Configuration/Control Register ... 1034
29.2.29 CFDCFSTS : Common FIFO Status Register ... 1037
29.2.30 CFDCFPCTR : Common FIFO Pointer Control Register ... 1039
29.2.31 CFDFESTS : FIFO Empty Status Register ... 1040
29.2.32 CFDFFSTS : FIFO Full Status Register ... 1040
29.2.33 CFDFMSTS : FIFO Message Lost Status Register ... 1041
29.2.34 CFDRFISTS : RX FIFO Interrupt Flag Status Register ... 1042
29.2.35 CFDCDTCT : DMA Transfer Control Register ... 1042
29.2.36 CFDCDTSTS : DMA Transfer Status Register ... 1043
29.2.37 CFDTMCi : TX Message Buffer Control Registers i (i = 0 to 3) ... 1044
29.2.38 CFDTMSTSj : TX Message Buffer Status Registers j (j = 0 to 3) ... 1045
29.2.39 CFDTMTRSTS : TX Message Buffer Transmission Request Status Register ... 1047
29.2.40 CFDTMTARSTS : TX Message Buffer Transmission Abort Request Status Register ... 1047
29.2.41 CFDTMTCSTS : TX Message Buffer Transmission Completion Status Register ... 1048
29.2.42 CFDTMTASTS : TX Message Buffer Transmission Abort Status Register ... 1048

29.2.43 CFDTMIEC : TX Message Buffer Interrupt Enable Configuration Register 1049
29.2.44 CFDTXQCC : TX Queue Configuration/Control Register 1049
29.2.45 CFDTXQSTS : TX Queue Status Register 1051
29.2.46 CFDTXQPCTR : TX Queue Pointer Control Register 1052
29.2.47 CFDTHLCC : TX History List Configuration/Control Register 1052
29.2.48 CFDTHLSTS : TX History List Status Register 1053
29.2.49 CFDTHLACC0 : TX History List Access Register 0 1055
29.2.50 CFDTHLACC1 : TX History List Access Register 1 1056
29.2.51 CFDTHLPCTR : TX History List Pointer Control Register 1056
29.2.52 CFDGRSTC : Global SW reset Register 1057
29.2.53 CFDGTSTCFG : Global Test Configuration Register 1057
29.2.54 CFDGTSTCTR : Global Test Control Register 1058
29.2.55 CFDGFDCFG : Global FD Configuration Register 1059
29.2.56 CFDGLOCKK : Global Lock Key Register 1059
29.2.57 CFDRPGACCk : RAM Test Page Access Registers k (k = 0 to 63) 1060
29.2.58 CFDGAFLIGNENT : Global AFL Ignore Entry Register 1060
29.2.59 CFDGAFLIGNCTR : Global AFL Ignore Control Register 1061
29.2.60 CFDRMIEC : RX Message Buffer Interrupt Enable Configuration Register 1061
29.2.61 Identifier Bits Alignment 1062
29.2.62 Message Buffer Component Structure 1062
29.3 Modes of Operation 1082
29.3.1 Overview 1082
29.3.2 Global Modes 1082
29.3.3 Channel Modes 1091
29.3.4 Global Mode and Channel Mode Transition Interactions 1096
29.4 Initialization 1098
29.4.1 Initialization of CAN Clock, Bit Timing and Baud Rate 1098
29.4.2 CAN Module Configuration after Hardware Reset 1105
29.5 Acceptance Filtering Function using Global Acceptance Filter List (AFL) 1106
29.5.1 Overview 1106
29.5.2 Allocation of AFL Entries 1108
29.5.3 AFL Entry Description 1108
29.5.4 Entering Entries in the AFL 1110
29.5.5 Loopback Modes 1111
29.5.6 IDE Masking 1112
29.5.7 Updating AFL Entry during Communication 1113
29.6 FIFO Buffers and Normal Message Buffer Configuration 1115
29.6.1 Normal RX Message Buffers 1116
29.6.2 FIFO Buffers 1116
29.7 Interrupts and DMA 1121
29.7.1 Interrupts 1121
29.7.2 DMA Transfer 1124
29.8 Reception and Transmission 1127
29.8.1 Reception 1127
29.8.2 Transmission 1133
29.9 Test Mode 1147
29.9.1 Channel Specific Test Modes 1148

29.9.2 Global Test Modes 1150
29.10 Usage notes 1154
29.10.1 Module-stop function 1154
30. CANFD ECC (CNECC) 1155
30.1 Overview 1155
30.2 Register Descriptions 1155
30.2.1 EC710CTL : ECC Control Register 1155
30.2.2 EC710TMC : ECC Test Mode Control Register 1158
30.2.3 EC710TED : ECC Test Substitute Data Register 1159
30.2.4 EC710EAD0 : ECC Error Address Register 1160
30.3 Operation 1160
30.3.1 ECC Function Setting 1160
30.3.2 ECC Decoder Testing 1161
30.4 Interrupts 1162
31. Serial Peripheral Interface (SPI) 1163
31.1 Overview 1163
31.2 Register Descriptions 1165
31.2.1 SPCR : SPI Control Register 1165
31.2.2 SSLP : SPI Slave Select Polarity Register 1167
31.2.3 SPPCR : SPI Pin Control Register 1167
31.2.4 SPSR : SPI Status Register 1168
31.2.5 SPDR/SPDR_HA/SPDR_BY : SPI Data Register 1172
31.2.6 SPSCR : SPI Sequence Control Register 1174
31.2.7 SPSSR : SPI Sequence Status Register 1175
31.2.8 SPBR : SPI Bit Rate Register 1176
31.2.9 SPDCR : SPI Data Control Register 1177
31.2.10 SPCKD : SPI Clock Delay Register 1178
31.2.11 SSLND : SPI Slave Select Negation Delay Register 1179
31.2.12 SPND : SPI Next-Access Delay Register 1179
31.2.13 SPCR2 : SPI Control Register 2 1180
31.2.14 SPCMDm : SPI Command Register m (m = 0 to 7) 1181
31.2.15 SPDCR2 : SPI Data Control Register 2 1183
31.2.16 SPCR3 : SPI Control Register 3 1184
31.3 Operation 1185
31.3.1 Overview of SPI Operation 1185
31.3.2 Controlling the SPI Pins 1186
31.3.3 SPI System Configuration Examples 1188
31.3.4 Data Formats 1193
31.3.5 Transfer Formats 1204
31.3.6 Data Transfer Modes 1206
31.3.7 Transmit Buffer Empty and Receive Buffer Full Interrupts 1208
31.3.8 Idle Interrupt 1210
31.3.9 Communication End Interrupt 1211
31.3.10 Error Detection 1217
31.3.11 Initializing the SPI 1222
31.3.12 SPI Operation 1223

31.3.13 Clock Synchronous Operation 1237
31.3.14 Loopback Mode 1243
31.3.15 Self-Diagnosis of Parity Bit Function 1244
31.3.16 Interrupt Sources 1245
31.4 Event Link Controller Event Output 1246
31.4.1 Receive Buffer Full Event Output 1246
31.4.2 Transmit Buffer Empty Event Output 1246
31.4.3 Mode-Fault, Underrun, Overrun, or Parity Error Event Output 1247
31.4.4 SPI Idle Event Output 1247
31.4.5 Communication End Event Output 1247
31.5 Usage Notes 1249
31.5.1 Settings for the Module-Stop State 1249
31.5.2 Constraint on Low-Power Functions 1249
31.5.3 Constraints on Starting Transfer 1249
31.5.4 Constraints on Mode-Fault, Underrun, Overrun, or Parity Error Event Output 1249
31.5.5 Constraints on the SPSR.SPRF and SPSR.SPTEF Flags 1249
32. Quad Serial Peripheral Interface (QSPI) 1250
32.1 Overview 1250
32.2 Register Descriptions 1251
32.2.1 SFMSMD : Transfer Mode Control Register 1251
32.2.2 SFMSSC : Chip Selection Control Register 1252
32.2.3 SFMSKC : Clock Control Register 1253
32.2.4 SFMSST : Status Register 1254
32.2.5 SFMCOM : Communication Port Register 1255
32.2.6 SFMCMD : Communication Mode Control Register 1256
32.2.7 SFMCST : Communication Status Register 1256
32.2.8 SFMSIC : Instruction Code Register 1257
32.2.9 SFMSAC : Address Mode Control Register 1257
32.2.10 SFMSDC : Dummy Cycle Control Register 1258
32.2.11 SFMSPC : SPI Protocol Control Register 1259
32.2.12 SFMPMD : Port Control Register 1259
32.2.13 SFMCNT1 : External QSPI Address Register 1260
32.3 Memory Map 1260
32.3.1 External Bus Space 1260
32.3.2 Address Width of the SPI Space and SPI Bus 1261
32.4 SPI Bus 1262
32.4.1 SPI Protocol 1262
32.4.2 SPI Mode 1265
32.5 SPI Bus Timing Adjustment 1266
32.5.1 SPI Bus Reference Cycles 1266
32.5.2 QSPCLK Signal Duty Ratio 1267
32.5.3 Minimum High-Level Width for the QSSL Signal 1267
32.5.4 QSSL Signal Setup Time 1268
32.5.5 QSSL Signal Hold Time 1268
32.5.6 Hold Time of the Serial Data Output Enable 1268
32.5.7 Setup Time for Serial Data Output 1269
32.5.8 Hold Time for Serial Data Output 1270

32.5.9 Serial Data Receiving Latency 1270
32.6 SPI Instruction Set Used for Serial Flash Memory Access 1271
32.6.1 SPI Instructions That Are Automatically Generated 1271
32.6.2 Standard Read Instruction 1272
32.6.3 Fast Read Instruction 1273
32.6.4 Fast Read Dual Output Instruction 1274
32.6.5 Fast Read Dual I/O Instruction 1275
32.6.6 Fast Read Quad Output Instruction 1276
32.6.7 Fast Read Quad I/O Instruction 1277
32.6.8 Enter 4-Byte Mode Instruction 1279
32.6.9 Exit 4-Byte Mode Instruction 1279
32.6.10 Write Enable Instruction 1279
32.7 SPI Bus Cycle Arrangement 1280
32.7.1 Serial Flash Memory Read Based on Individual Conversion 1280
32.7.2 Serial Flash Memory Read Using the Prefetch Function 1280
32.7.3 Halt of Prefetching 1281
32.7.4 Direct Specification of Prefetch Destination 1281
32.7.5 Prefetch State Polling 1281
32.7.6 SPI Bus Cycle Extension Function 1282
32.8 XIP Control 1282
32.8.1 Setting XIP Mode 1283
32.8.2 Releasing the XIP Mode 1284
32.9 QIO2 and QIO3 Pin States 1285
32.10 Direct Communication Mode 1286
32.10.1 About Direct Communication 1286
32.10.2 Using Direct Communication Mode 1286
32.10.3 Generating the SPI Bus Cycle during Direct Communication 1286
32.11 Interrupts 1290
32.12 Usage Note 1290
32.12.1 Settings for the Module-Stop Function 1290
32.12.2 Procedure for Changing Settings in Multiple Control Registers 1290
33. Cyclic Redundancy Check (CRC) 1292
33.1 Overview 1292
33.2 Register Descriptions 1293
33.2.1 CRCCR0 : CRC Control Register 0 1293
33.2.2 CRCDIR/CRCDIR_BY : CRC Data Input Register 1293
33.2.3 CRCDOR/CRCDOR_HA/CRCDOR_BY : CRC Data Output Register 1294
33.3 Operation 1294
33.3.1 Basic Operation 1294
33.4 Usage Notes 1297
33.4.1 Settings for the Module-Stop State 1297
33.4.2 Note on Transmission 1297
34. Renesas Secure IP (RSIP-E31A) 1299
34.1 Overview 1299
34.2 Operation 1301
34.2.1 Symmetric cryptography 1301

34.2.2 Asymmetric Cryptography 1301
34.2.3 Hash generator 1302
34.2.4 Encryption and Decryption 1302
34.3 Usage Notes 1303
34.3.1 Software Standby Mode 1303
34.3.2 Module-Stop Function Setting 1303
34.3.3 SPA/DPA Protections 1303
34.3.4 Restrictions on Open process 1303
35. 12-Bit A/D Converter (ADC12) 1304
35.1 Overview 1304
35.2 Register Descriptions 1307
35.2.1 ADDRn : A/D Data Registers n (n = 0 to 6, 17 to 25) 1307
35.2.2 ADDBLDR : A/D Data Duplexing Register 1309
35.2.3 ADDBLDRn : A/D Data Duplexing Register n (n = A, B) 1310
35.2.4 ADTSDR : A/D Temperature Sensor Data Register 1311
35.2.5 ADOCDR : A/D Internal Reference Voltage Data Register 1313
35.2.6 ADRD : A/D Self-Diagnosis Data Register 1314
35.2.7 ADCSR : A/D Control Register 1315
35.2.8 ADANSA0 : A/D Channel Select Register A0 1318
35.2.9 ADANSA1 : A/D Channel Select Register A1 1319
35.2.10 ADANSB0 : A/D Channel Select Register B0 1320
35.2.11 ADANSB1 : A/D Channel Select Register B1 1320
35.2.12 ADADS0 : A/D-Converted Value Addition/Average Channel Select Register 0 1321
35.2.13 ADADS1 : A/D-Converted Value Addition/Average Channel Select Register 1 1322
35.2.14 ADADC : A/D-Converted Value Addition/Average Count Select Register 1323
35.2.15 ADCER : A/D Control Extended Register 1323
35.2.16 ADSTRGR : A/D Conversion Start Trigger Select Register 1325
35.2.17 ADEXICR : A/D Conversion Extended Input Control Registers 1326
35.2.18 ADSSTRn/ADSSTRL/ADSSTRT/ADSSTRO : A/D Sampling State Register (n = 0 to 6). 1327
35.2.19 ADDISCR : A/D Disconnection Detection Control Register 1328
35.2.20 ADACSR : A/D Conversion Operation Mode Select Register 1329
35.2.21 ADGSPCR : A/D Group Scan Priority Control Register 1329
35.2.22 ADCMPCR : A/D Compare Function Control Register 1330
35.2.23 ADCMPANSR0 : A/D Compare Function Window A Channel Select Register 0 1332
35.2.24 ADCMPANSR1 : A/D Compare Function Window A Channel Select Register 1 1332
35.2.25 ADCMPANSER : A/D Compare Function Window A Extended Input Select Register 1333
35.2.26 ADCMPLR0 : A/D Compare Function Window A Comparison Condition Setting Register 0 1333
35.2.27 ADCMPLR1 : A/D Compare Function Window A Comparison Condition Setting Register 1 1335
35.2.28 ADCMPLER : A/D Compare Function Window A Extended Input Comparison Condition Setting Register 1335
35.2.29 ADCMPDRn : A/D Compare Function Window A Lower-Side/Upper-Side Level Setting Register (n = 0, 1) 1336
35.2.30 ADWINnLB : A/D Compare Function Window B Lower-Side/Upper-Side Level Setting Register (n = L, U) 1337
35.2.31 ADCMPSR0 : A/D Compare Function Window A Channel Status Register 0 1339

35.2.32 ADCMPSR1 : A/D Compare Function Window A Channel Status Register1 1339
35.2.33 ADCMPSER : A/D Compare Function Window A Extended Input Channel Status Register 1340
35.2.34 ADCMPBNSR : A/D Compare Function Window B Channel Select Register 1341
35.2.35 ADCMPBSR : A/D Compare Function Window B Status Register 1342
35.2.36 ADWINMON : A/D Compare Function Window A/B Status Monitor Register 1343
35.2.37 ADHVREFCNT : A/D High-Potential/Low-Potential Reference Voltage Control Register. 1344
35.3 Operation 1345
35.3.1 Scanning Operation 1345
35.3.2 Single Scan Mode 1346
35.3.3 Continuous Scan Mode 1350
35.3.4 Group Scan Mode 1352
35.3.5 Compare Function for Windows A and B 1361
35.3.6 Analog Input Sampling and Scan Conversion Time 1365
35.3.7 Usage Example of A/D Data Register Automatic Clearing Function 1367
35.3.8 A/D-Converted Value Addition/Average Mode 1368
35.3.9 Disconnection Detection Assist Function 1368
35.3.10 Starting A/D Conversion with an Asynchronous Trigger 1370
35.3.11 Starting A/D Conversion with a Synchronous Trigger from a Peripheral Module 1371
35.4 Interrupt Sources and DTC Transfer Requests 1371
35.4.1 Interrupt Requests 1371
35.5 Event Link Function 1372
35.5.1 Event Output to the ELC 1372
35.5.2 ADC12 Operation through an Event from the ELC 1372
35.6 Selecting Reference Voltage 1373
35.7 A/D Conversion Procedure When Selecting Internal Reference Voltage as High-Potential Reference Voltage 1373
35.8 Usage Notes 1373
35.8.1 Constraints on Setting the Registers 1373
35.8.2 Constraints on Reading the Data Registers 1373
35.8.3 Constraints on Stopping A/D Conversion 1374
35.8.4 A/D Conversion Restart and Termination Timing 1376
35.8.5 Constraints on Scan End Interrupt Handling 1376
35.8.6 Settings for the Module-Stop Function 1376
35.8.7 Notes on Entering the Low-Power States 1376
35.8.8 Error in Absolute Accuracy When Disconnection Detection Assistance Is in Use 1376
35.8.9 ADHSC Bit Rewriting Procedure 1376
35.8.10 Constraints on Operating Modes and Status Bits 1377
35.8.11 Notes on Board Design 1377
35.8.12 Constraints on Noise Prevention 1377
35.8.13 Port Settings When Using the ADC12 Input 1378
35.8.14 Notes on Canceling Software Standby Mode 1378
36. Temperature Sensor (TSN) 1379
36.1 Overview 1379
36.2 Register Descriptions 1379
36.2.1 TSCDR : Temperature Sensor Calibration Data Register 1379
36.2.2 TSCDRR : Temperature Sensor Calibration Data Register (Room Temperature) 1380

36.2.3 TSCDRL : Temperature Sensor Calibration Data Register (Low Temperature) 1380
36.3 Using the Temperature Sensor 1380
36.3.1 Preparation for Using the Temperature Sensor 1380
36.3.2 Procedures for Using the Temperature Sensor 1381
37. Data Operation Circuit (DOC) 1382
37.1 Overview 1382
37.2 DOC Register Descriptions 1383
37.2.1 DOCR : DOC Control Register 1383
37.2.2 DOSR : DOC Flag Status Register 1384
37.2.3 DOSCR : DOC Flag Status Clear Register 1384
37.2.4 DODIR : DOC Data Input Register 1385
37.2.5 DODSR0 : DOC Data Setting Register 0 1385
37.2.6 DODSR1 : DOC Data Setting Register 1 1385
37.3 Operation 1386
37.3.1 Data Comparison Mode 1386
37.3.2 Data Addition Mode 1388
37.3.3 Data Subtraction Mode 1389
37.4 Interrupt Source 1389
37.5 Event Link Output 1390
37.6 Interrupt Handling and Event Linking 1390
37.7 Usage Notes 1390
37.7.1 Settings for the Module-Stop State 1390
38. SRAM 1391
38.1 Overview 1391
38.2 Register Descriptions 1391
38.2.1 SRAMSAR : SRAM Security Attribution Register 1391
38.2.2 PARIOAD : SRAM Parity Error Operation After Detection Register 1392
38.2.3 SRAMPRCR : SRAM Protection Register 1392
38.2.4 ECCMODE : ECC Operating Mode Control Register 1393
38.2.5 ECC2STS : ECC 2-Bit Error Status Register 1394
38.2.6 ECC1STSEN : ECC 1-Bit Error Information Update Enable Register 1394
38.2.7 ECC1STS : ECC 1-Bit Error Status Register 1395
38.2.8 ECCPRCR : ECC Protection Register 1395
38.2.9 ECCPRCR2 : ECC Protection Register 2 1396
38.2.10 ECCETST : ECC Test Control Register 1396
38.2.11 ECCOAD : SRAM ECC Error Operation After Detection Register 1397
38.3 Operation 1397
38.3.1 Module Stop Function 1397
38.3.2 Correction of ECC Errors 1398
38.3.3 ECC Error Interrupt Function 1398
38.3.4 ECC Decoder Testing 1398
38.3.5 Parity Calculation Function 1399
38.3.6 TrustZone Filter Function 1401
38.3.7 Interrupt Source 1402
38.3.8 Number of Access Cycles to SRAM 1402
39. Flash Memory 1404

39.1 Overview 1404
39.2 Structure of Memory 1406
39.3 Address Space 1409
39.4 Register Descriptions 1409
39.4.1 DFLCTL : Data Flash Control Register 1409
39.4.2 PFBER : Prefetch Buffer Enable Register 1410
39.4.3 FSAR : Flash Security Attribution Register 1410
39.4.4 UIDRn : Unique ID Registers n (n = 0 to 3) 1411
39.4.5 PNRn : Part Numbering Register n (n = 0 to 3) 1411
39.4.6 MCUVER : MCU Version Register 1411
39.4.7 FASTAT : Flash Access Status Register 1412
39.4.8 FAEINT : Flash Access Error Interrupt Enable Register 1413
39.4.9 FRDYIE : Flash Ready Interrupt Enable Register 1414
39.4.10 FSADDR : FACI Command Start Address Register 1414
39.4.11 FEADDR : FACI Command End Address Register 1415
39.4.12 FMEPROT : Flash P/E Mode Entry Protection Register 1416
39.4.13 FBPROT0 : Flash Block Protection Register 1416
39.4.14 FBPROT1 : Flash Block Protection for Secure Register 1417
39.4.15 FSTATR : Flash Status Register 1418
39.4.16 FENTRYR : Flash P/E Mode Entry Register 1422
39.4.17 FSUINITR : Flash Sequencer Setup Initialization Register 1423
39.4.18 FCMDR : FACI Command Register 1424
39.4.19 FBCCNT : Blank Check Control Register 1424
39.4.20 FBCSTAT : Blank Check Status Register 1425
39.4.21 FBCADDR : Flash Blank Check Address Register 1425
39.4.22 FSUASMON : Flash Startup Area Select Monitor Register 1426
39.4.23 FPCKAR : Flash Sequencer Processing Clock Notification Register 1426
39.4.24 FSUACR : Flash Startup Area Control Register 1427
39.5 Prefetch Buffer 1428
39.6 Operating Modes Associated with Flash Memory 1428
39.7 Overview of Functions 1428
39.8 Operating Modes of the Flash Sequencer 1430
39.9 FACI Commands 1431
39.9.1 List of FACI Commands 1431
39.9.2 Relationship between the Flash Sequencer State and FACI Commands 1432
39.9.3 Usage of FACI Commands 1433
39.10 Suspend Operation 1447
39.11 Protection Function 1447
39.11.1 Software Protection 1447
39.11.2 Error Protection 1452
39.11.3 Startup Program Protection 1454
39.11.4 Dual Bank Function 1458
39.11.5 Block Swap Function 1460
39.12 Security Function 1461
39.12.1 Security Flag for Startup Area Select 1461
39.12.2 Permanent Block Protect Setting 1461
39.12.3 Flash Memory Protection for TrustZone 1463

39.13 Boot Mode 1469
39.13.1 Boot Mode (for the SCI Interface) 1470
39.13.2 Boot Mode (for the SWD Interface) 1470
39.14 Using the Serial Programmer for Rewriting 1471
39.14.1 Environments for Serial Programming 1471
39.15 Programming through Self-Programming 1472
39.15.1 Overview 1472
39.15.2 Background Operation 1473
39.16 Reading Flash Memory 1474
39.16.1 Reading Code Flash Memory 1474
39.16.2 Reading Data Flash Memory 1474
39.16.3 Access Cycle 1474
39.17 Usage Notes 1475
40. Segment LCD Controller (SLCDC) 1477
40.1 Overview 1477
40.2 Register Descriptions 1485
40.2.1 LCDM0 : LCD Mode Register 0 1485
40.2.2 LCDM1 : LCD Mode Register 1 1487
40.2.3 LCDC0 : LCD Clock Control Register 0 1488
40.2.4 VLCD : LCD Boost Level Control Register 1489
40.2.5 LCD Display Data Registers 1492
40.3 Selection of LCD Display Data Register 1495
40.3.1 A-pattern Area and B-pattern Area Data Display 1496
40.3.2 Blinking Display (Alternately Displaying A-pattern and B-pattern Area Data) 1496
40.4 Setting LCD Controller/Driver 1497
40.5 Operation Stop Procedure 1501
40.6 Supplying LCD Drive Voltages VL1, VL2, VL3, and VL4 1502
40.6.1 External Resistance Division Method 1502
40.6.2 Internal Voltage Boosting Method 1504
40.6.3 Capacitor Split Method 1505
40.7 Common and Segment Signals 1507
40.8 Display Modes 1513
40.8.1 Static Display Example 1513
40.8.2 Two-Time Slice Display Example 1516
40.8.3 Three-Time Slice Display Example 1518
40.8.4 Four-Time Slice Display Example 1522
40.8.5 Six-Time Slice Display Example 1526
40.8.6 Eight-Time Slice Display Example 1530
41. Internal Voltage Regulator 1535
41.1 Overview 1535
41.2 Operation 1535
41.3 VRTC-Domain 1535
42. Security Features 1537
42.1 Overview 1537
42.2 Arm TrustZone Security 1537
42.2.1 Arm TrustZone Technology 1537

42.2.2 Memory Security Attribution 1537
42.2.3 Peripheral Security Attribution 1539
42.2.4 Flash Sequencer Security Attribution 1539
42.2.5 Address Space Security Attribution 1540
42.2.6 TrustZone Access Error 1540
42.3 Device Lifecycle Management 1541
42.3.1 Changing the Lifecycle State 1542
42.3.2 Debug Access Level 1543
42.3.3 Serial Programming 1543
42.3.4 Lifecycle Change Example 1543
42.3.5 Failure Analysis 1543
42.4 Key Injection 1543
42.5 Secure Factory Programming 1546
42.6 Field Updating in Dual Mode 1547
42.7 Register Description 1548
42.7.1 PSARB : Peripheral Security Attribution Register B 1549
42.7.2 PSARC : Peripheral Security Attribution Register C 1550
42.7.3 PSARD : Peripheral Security Attribution Register D 1551
42.7.4 PSARE : Peripheral Security Attribution Register E 1552
42.7.5 MSSAR : Module Stop Security Attribution Register 1553
42.7.6 CFSAMONA : Code Flash Security Attribution Monitor Register A 1553
42.7.7 CFSAMONB : Code Flash Security Attribution Monitor Register B 1554
42.7.8 DFSAMON : Data Flash Security Attribution Monitor Register 1554
42.7.9 SSAMONA : SRAM Security Attribution Monitor Register A 1554
42.7.10 SSAMONB : SRAM Security Attribution Monitor Register B 1555
42.7.11 DLMMON : Device Lifecycle Management State Monitor Register 1555
42.7.12 TZFSAR : TrustZone Filter Security Attribution Register 1556
42.7.13 TZFOAD : TrustZone Filter Operation After Detection Register 1556
42.7.14 TZFPT : TrustZone Filter Protect Register 1557
42.8 Usage Notes 1557
42.8.1 Restrictions on setting the security attribution 1557
42.8.2 SAU setting 1558
43. Electrical Characteristics 1559
43.1 Absolute Maximum Ratings 1559
43.2 DC Characteristics 1560
43.2.1 Tj/Ta Definition 1560
43.2.2 I/O V_{IH}, V_{IL} 1561
43.2.3 I/O I_{OH}, I_{OL} 1561
43.2.4 I/O V_{OH}, V_{OL}, and Other Characteristics 1565
43.2.5 Operating and Standby Current 1566
43.2.6 VCC Rise and Fall Gradient and Ripple Frequency 1571
43.2.7 VRTC Rise and Fall Gradient 1572
43.2.8 Thermal Characteristics 1572
43.3 AC Characteristics 1574
43.3.1 Frequency 1575
43.3.2 Clock Timing 1576

43.3.3 Reset Timing 1579
43.3.4 Wakeup Time 1580
43.3.5 NMI and IRQ Noise Filter 1583
43.3.6 I/O Ports, POEG, GPT, AGT, and ADC12 Trigger Timing 1584
43.3.7 CAC Timing 1585
43.3.8 SCI Timing 1586
43.3.9 SPI Timing 1592
43.3.10 QSPI Timing 1597
43.3.11 IIC Timing 1599
43.3.12 UARTA Timing 1602
43.3.13 CANFD Timing 1602
43.4 ADC12 Characteristics 1603
43.5 TSN Characteristics 1610
43.6 OSC Stop Detect Characteristics 1610
43.7 POR and LVD Characteristics 1611
43.8 VRTC POR Characteristics 1615
43.9 EXLVDVBAT Pin Voltage Detection Characteristics 1616
43.10 VRTC Pin Voltage Detection Characteristics 1617
43.11 EXLVD Pin Voltage Detections 1618
43.12 Segment LCD Controller Characteristics 1619
43.12.1 External Resistance Division Method 1619
43.12.2 Internal Voltage Boosting Method (VL1 Reference) 1620
43.12.3 Internal Voltage Boosting Method (VL2 Reference) 1621
43.12.4 Capacitor Split Method (VCC Reference) 1623
43.12.5 Capacitor Split Method (VL4 Reference) 1623
43.13 Flash Memory Characteristics 1624
43.13.1 Code Flash Memory Characteristics 1624
43.13.2 Data Flash Memory Characteristics 1625
43.13.3 Serial Wire Debug (SWD) 1627
Appendix 1. Port States in Each Processing Mode 1629
Appendix 2. Package Dimensions 1630
Appendix 3. I/O Registers 1632
3.1 Peripheral Base Addresses 1632
3.2 Access Cycles 1633
Appendix 4. Peripheral Variant 1636

The RA4C1 group are low power, 32-bit microcontrollers (MCUs) based on the Arm® Cortex®-M33 (CM33) core with TrustZone®, delivering an ideal balance of low voltage operation, low power consumption and high performance combined with an advanced security engine needed by many security sensitive applications. The RA4C1 offers up to 512 KB of code flash memory, 8 KB of data flash memory and 96 KB of SRAM. The RA4C1 offers a wide range of peripheral features including 2 × I^2C, CANFD, 3 × SPI, Quad SPI, a segment LCD controller and an RTC with independent power supply, and comes in 64 and 100 pin LQFP packages.

Features

■ Arm® Cortex®-M33 Core

- Armv8-M architecture with the main extension
- Maximum operating frequency: 80 MHz
- Arm Memory Protection Unit (Arm MPU)
  - Protected Memory System Architecture (PMSAv8)
  - Secure MPU (MPU_S): 8 regions
  - Non-secure MPU (MPU_NS): 8 regions
- SysTick timer
  - Embeds two Systick timers: Secure and Non-secure instance
  - Driven by LOCO or system clock
- CoreSight™ ETM-M33

■ Memory

- Up to 512 KB code flash memory
- 8 KB data flash memory (100,000 program/erase (P/E) cycles)
- 96 KB SRAM

■ Connectivity

- Serial Communications Interface (SCI) × 6
  - Asynchronous interfaces
  - 8-bit clock synchronous interface
  - Smart card interface
  - Simple IIC
  - Simple SPI
  - Simple LIN (SCI1)
  - Manchester coding (SCI3, SCI4)
- IrDA interface (IrDA)
- I^2C bus interface (IIC) × 2
- Serial Interface UARTA (UARTA) × 2
- Serial Peripheral Interface (SPI) × 3
- Quad Serial Peripheral Interface (QSPI)
- CAN with Flexible Data-rate (CANFD)

■ Analog

- 12-bit A/D Converter (ADC12)
- Temperature Sensor (TSN)

■ Timers

- General PWM Timer 32-bit (GPT32) × 2
- General PWM Timer 16-bit (GPT16) × 4
- Low Power Asynchronous General Purpose Timer (AGT) × 2

■ Security and Encryption

- Renesas Secure IP (RSIP-E31A)
  - Symmetric algorithms: AES
  - Asymmetric algorithms: ECC
  - Hash-value generation: SHA224, SHA256
  - 128-bit unique ID
- Arm® TrustZone®
  - Up to three or six regions for the code flash, depending on the bank mode
  - Up to two regions for the data flash
  - Up to three regions for the SRAM
  - Individual secure or non-secure security attribution for each peripheral
- Device lifecyle management
- Pin function
  - Up to three tamper pins
  - Secure pin multiplexing

■ System and Power Management

- Low power modes
- Independent power supply Realtime Clock (RTC)
- Independent power supply (VRTC) domain power-on reset (VRTC_POR) circuit
- Event Link Controller (ELC)
- Data Transfer Controller (DTC)
- DMA Controller (DMAC) × 8
- Power-on reset
- Low Voltage Detection (LVD) with voltage settings
- Low Voltage Detection for EXLVDVBAT pin
- Low Voltage Detection for VRTC pin
- Low Voltage Detection for EXLVD pin
- Watchdog Timer (WDT)
- Independent Watchdog Timer (IWDT)

■ Human Machine Interface (HMI)

- Segment LCD Controller (SLCDC)

■ Multiple Clock Sources

- Main clock oscillator (MOSC) (1 to 20 MHz)
- Sub-clock oscillator (SOSC) (32.768 kHz)
- High-speed on-chip oscillator (HOCO) (48/64/80 MHz)
- Middle-speed on-chip oscillator (MOCO) (8 MHz)
- Low-speed on-chip oscillator (LOCO) (32.768 kHz)
- IWDT-dedicated on-chip oscillator (15 kHz)
- Clock trim function for HOCO/MOCO/LOCO
- PLL
- PLL_RTC
- Clock out support

■ General-Purpose I/O Ports

- 5-V tolerance, open drain, input pull-up

■ Operating Voltage

- VCC: 1.6 to 3.6 V

■ Operating Temperature and Packages

- Ta = -40 °C to +105 °C
  - 100-pin LQFP (14 mm × 14 mm, 0.5 mm pitch)
  - 64-pin LQFP (10 mm × 10 mm, 0.5 mm pitch)

1. Overview

The MCU integrates multiple series of software- and pin-compatible Arm®-based 32-bit cores that share a common set of Renesas peripherals to facilitate design scalability and efficient platform-based product development.

The MCU in this series incorporates a high-performance Arm Cortex®-M33 core running up to 80 MHz with the following features:

- Up to 512 KB code flash memory
- 96 KB SRAM
- Quad Serial Peripheral Interface (QSPI)
- Analog peripherals
- Security and safety features

1.1 Function Outline

Table 1.1 Arm core

Feature	Functional description
Arm Cortex-M33 core	• Maximum operating frequency: up to 80 MHz • Arm Cortex-M33 core: – Armv8-M architecture with security extension – Revision: r0p4-00rel1 • Arm Memory Protection Unit (Arm MPU) – Protected Memory System Architecture (PMSAv8) – Secure MPU (MPU_S): 8 regions – Non-secure MPU (MPU_NS): 8 regions • SysTick timer – Embeds two Systick timers: Secure and Non-secure instance – Driven by SysTick timer clock (SYSTICCLK) or system clock (ICLK) • CoreSight™ ETM-M33

Table 1.2 Memory

Feature	Functional description
Code flash memory	Maximum 512 KB of code flash memory. See section 39, Flash Memory.
Data flash memory	8 KB of data flash memory. See section 39, Flash Memory.
Option-setting memory	The option-setting memory determines the state of the MCU after a reset. See section 6, Option-Setting Memory.
SRAM	On-chip high-speed SRAM with either parity bit or Error Correction Code (ECC). See section 38, SRAM.

Table 1.3 System (1 of 2)

Feature	Functional description
Operating modes	Two operating modes: • Single-chip mode • SCI/SWD boot mode See section 3, Operating Modes.
Resets	The MCU provides 13 resets. See section 5, Resets.

Table 1.3 System (2 of 2)

Feature	Functional description
Low Voltage Detection (LVD)	The Low Voltage Detection (LVD) module monitors the voltage level input to the following pins: ● VCC ● EXLVDVBAT ● VRTC ● EXLVD The detection level can be selected by register settings. The LVD module consists of six separate low voltage detectors: ● LVD0 ● LVD1 ● LVD2 ● LVD_EXLVDVBAT ● LVD_VRTC ● LVD_EXLVD LVD0, LVD1, and LVD2 measure the voltage level input to the VCC pin. LVD_EXLVDVBAT measures the voltage level input to the EXLVDVBAT pin. LVD_VRTC measures the voltage level input to the VRTC pin. LVD2 and LVD_EXLVD measure the voltage level input to the EXLVD pin. LVD registers allow your application to configure detection of VCC, EXLVDVBAT, VRTC, and EXLVD changes at various voltage thresholds. See section 7, Low Voltage Detection (LVD).
Clocks	● Main clock oscillator (MOSC) ● Sub-clock oscillator (SOSC) ● High-speed on-chip oscillator (HOCO) ● Middle-speed on-chip oscillator (MOCO) ● Low-speed on-chip oscillator (LOCO) ● IWDT-dedicated on-chip oscillator ● PLL ● PLL_RTC ● Clock out support See section 8, Clock Generation Circuit.
Clock Frequency Accuracy Measurement Circuit (CAC)	The Clock Frequency Accuracy Measurement Circuit (CAC) counts pulses of the clock to be measured (measurement target clock) within the time generated by the clock selected as the measurement reference (measurement reference clock), and determines the accuracy depending on whether the number of pulses is within the allowable range. When measurement is complete or the number of pulses within the time generated by the measurement reference clock is not within the allowable range, an interrupt request is generated. See section 9, Clock Frequency Accuracy Measurement Circuit (CAC).
Interrupt Controller Unit (ICU)	The Interrupt Controller Unit (ICU) controls which event signals are linked to the Nested Vector Interrupt Controller (NVIC), the DMA Controller (DMAC), and the Data Transfer Controller (DTC) modules. The ICU also controls non-maskable interrupts. See section 12, Interrupt Controller Unit (ICU).
Low power modes	Power consumption can be reduced in multiple ways, including setting clock dividers, stopping modules, selecting power control mode in normal operation, and transitioning to low power modes. See section 10, Low Power Modes.
Register write protection	The register write protection function protects important registers from being overwritten due to software errors. The registers to be protected are set with the Protect Register (PRCR). See section 11, Register Write Protection.
Memory Protection Unit (MPU)	The MCU has one Memory Protection Unit (MPU). See section 14, Memory Protection Unit (MPU).

Table 1.4 Event link

Feature	Functional description
Event Link Controller (ELC)	The Event Link Controller (ELC) uses the event requests generated by various peripheral modules as source signals to connect them to different modules, allowing direct link between the modules without CPU intervention. See section 17, Event Link Controller (ELC).

Table 1.5 Direct memory access

Feature	Functional description
Data Transfer Controller (DTC)	A Data Transfer Controller (DTC) module is provided for transferring data when activated by an interrupt request. See section 16, Data Transfer Controller (DTC).
DMA Controller (DMAC)	The MCU includes an 8-channel direct memory access controller (DMAC) that can transfer data without intervention from the CPU. When a DMA transfer request is generated, the DMAC transfers data stored at the transfer source address to the transfer destination address. See section 15, DMA Controller (DMAC).

Table 1.6 External bus interface

Feature	Functional description
External bus	• QSPI area (EQBIU): Connected to the QSPI (external device interface)

Table 1.7 Timers

Feature	Functional description
General PWM Timer (GPT)	The General PWM Timer (GPT) is a 32-bit timer with GPT32 × 2 channels and a 16-bit timer with GPT16 × 4 channels. PWM waveforms can be generated by controlling the up-counter, down-counter, or the up- and down-counter. In addition, PWM waveforms can be generated for controlling brushless DC motors. The GPT can also be used as a general-purpose timer. See section 20, General PWM Timer (GPT).
Port Output Enable for GPT (POEG)	The Port Output Enable (POEG) function can place the General PWM Timer (GPT) output pins in the output disable state. See section 19, Port Output Enable for GPT (POEG).
Low Power Asynchronous General Purpose Timer (AGT)	The low power Asynchronous General Purpose Timer (AGT) is a 32-bit timer that can be used for pulse output, external pulse width or period measurement, and counting external events. This timer consists of a reload register and a down counter. The reload register and the down counter are allocated to the same address, and can be accessed with the AGT register. See section 21, Low Power Asynchronous General Purpose Timer (AGTW).
Realtime Clock (RTC)	The Realtime Clock (RTC) has two operation modes, normal operation mode and low-consumption clock mode. In each of the operation mode, the RTC has two counting modes, calendar count mode and binary count mode, that are used by switching register settings. For calendar count mode, the RTC has a 100-year calendar from 2000 to 2099 and automatically adjusts dates for leap years. For binary count mode, the RTC counts seconds and retains the information as a serial value. Binary count mode can be used for calendars other than the Gregorian (Western) calendar. See section 22, Realtime Clock (RTC).
Watchdog Timer (WDT)	The Watchdog Timer (WDT) is a 14-bit down counter that can be used to reset the MCU when the counter underflows because the system has run out of control and is unable to refresh the WDT. In addition, the WDT can be used to generate a non-maskable interrupt or an underflow interrupt. See section 23, Watchdog Timer (WDT).
Independent Watchdog Timer (IWDT)	The Independent Watchdog Timer (IWDT) consists of a 14-bit down counter that must be serviced periodically to prevent counter underflow. The IWDT provides functionality to reset the MCU or to generate a non-maskable interrupt or an underflow interrupt. Because the timer operates with an independent, dedicated clock source, it is particularly useful in returning the MCU to a known state as a fail-safe mechanism when the system runs out of control. The IWDT can be triggered automatically by a reset, underflow, refresh error, or a refresh of the count value in the registers. See section 24, Independent Watchdog Timer (IWDT).

Table 1.8 Communication interfaces

Feature	Functional description
Serial Communications Interface (SCI)	The Serial Communications Interface (SCI) × 6 channels have asynchronous and synchronous serial interfaces: ● Asynchronous interfaces (UART and Asynchronous Communications Interface Adapter (ACIA)) ● 8-bit clock synchronous interface ● Simple IIC (master-only) ● Simple SPI ● Smart card interface ● Manchester interface ● Simple LIN The smart card interface complies with the ISO/IEC 7816-3 standard for electronic signals and transmission protocol. SCIn (n = 0, 3 to 5, 9) has FIFO buffers to enable continuous and full-duplex communication, and the data transfer speed can be configured independently using an on-chip baud rate generator. See section 25, Serial Communications Interface (SCI).
IrDA Interface	The IrDA interface sends and receives IrDA data communication waveforms in cooperation with the SCI5 based on the IrDA (Infrared Data Association) standard 1.0. See section 26, IrDA Interface (IrDA).
I^2C bus interface (IIC)	The I^2C bus interface (IIC) has two channels. The IIC module conforms with and provides a subset of the NXP I^2C (Inter-Integrated Circuit) bus interface functions. See section 27, I^2C Bus Interface (IIC).
Serial Interface UARTA (UARTA)	The serial interface UARTA (UARTA) has two channels. The UARTA supports the following modes: ● Operation stop mode ● UART mode See section 28, Serial Interface UARTA (UARTA).
Serial Peripheral Interface (SPI)	The Serial Peripheral Interface (SPI) has three channels. The SPI provides high-speed full-duplex synchronous serial communications with multiple processors and peripheral devices. See section 31, Serial Peripheral Interface (SPI).
Control Area Network with Flexible Data-Rate Module (CAN-FD)	The CAN with Flexible Data-Rate (CANFD) module can handle classical CAN frames and CANFD frames complied with ISO 11898-1 standard. The module supports 4 transmit buffers and 16 receive buffers. See section 29, CAN with Flexible Data-rate (CANFD).
Quad Serial Peripheral Interface (QSPI)	The Quad Serial Peripheral Interface (QSPI) is a memory controller for connecting a serial ROM (nonvolatile memory such as a serial flash memory, serial EEPROM, or serial FeRAM) that has an SPI-compatible interface. See section 32, Quad Serial Peripheral Interface (QSPI).

Table 1.9 Analog

Feature	Functional description
12-bit A/D Converter (ADC12)	A 12-bit successive approximation A/D converter (ADC12) is provided. Analog input channels are selectable up to 16. The temperature sensor output and an internal reference voltage are selectable for conversion. See section 35, 12-Bit A/D Converter (ADC12).
Temperature Sensor (TSN)	The on-chip Temperature Sensor (TSN) determines and monitors the die temperature for reliable operation of the device. The sensor outputs a voltage directly proportional to the die temperature, and the relationship between the die temperature and the output voltage is fairly linear. The output voltage is provided to the ADC12 for conversion and can be further used by the end application. See section 36, Temperature Sensor (TSN).

Table 1.10 Human machine interfaces

Feature	Functional description
Segment LCD Controller (SLCDC)	The SLCDC provides the following functions: ● Internal voltage boosting method, capacitor split method, and external resistance division method are switchable ● VL1 or VL2 reference mode is selectable under internal voltage boosting method ● VCC or VL4 reference mode is selectable under capacitor split method ● Segment signal output: 48 (44) ● Common signal output: 4 (8) ● Waveform A or B selectable ● The LCD can be made to blink Note: The values in parentheses are the number of signal outputs when 8 com is used. See section 40, Segment LCD Controller (SLCDC).

Table 1.11 Data processing

Feature	Functional description
Cyclic Redundancy Check (CRC) calculator	The Cyclic Redundancy Check (CRC) generates CRC codes to detect errors in the data. The bit order of CRC calculation results can be switched for LSB-first or MSB-first communication. Additionally, various CRC-generation polynomials are available. See section 33, Cyclic Redundancy Check (CRC).
Data Operation Circuit (DOC)	The Data Operation Circuit (DOC) compares, adds, and subtracts 32-bit data. When a selected condition applies, 32-bit data is compared and an interrupt can be generated. See section 37, Data Operation Circuit (DOC).

Table 1.12 Security

Feature	Functional description
Security function	● ARMv8-M TrustZone security ● Device lifecycle management ● Debug access level ● Key injection ● Secure pin multiplexing
Renesas Secure IP (RSIP-E31A)	● Symmetric algorithms: AES ● Asymmetric algorithms: ECC ● Hash value generation: SHA-224, SHA-256, SHA-512/224, SHA-512/256, SHA-384, SHA-512 ● True random number generator ● 128-bit unique ID. See section 34, Renesas Secure IP (RSIP-E31A).

Table 1.13 I/O ports

Feature	Functional description
Programmable I/O ports	● I/O ports for the 100-pin LQFP – I/O pins: 80 – Input pins: 3 – Pull-up resistors: 80 – N-ch open-drain outputs: 73 – 5-V tolerance: 4 ● I/O ports for the 64-pin LQFP – I/O pins: 46 – Input pins: 3 – Pull-up resistors: 46 – N-ch open-drain outputs: 39 – 5-V tolerance: 4

1.2 Block Diagram

Figure 1.1 shows a block diagram of the MCU superset. Some individual devices within the group have a subset of the features.

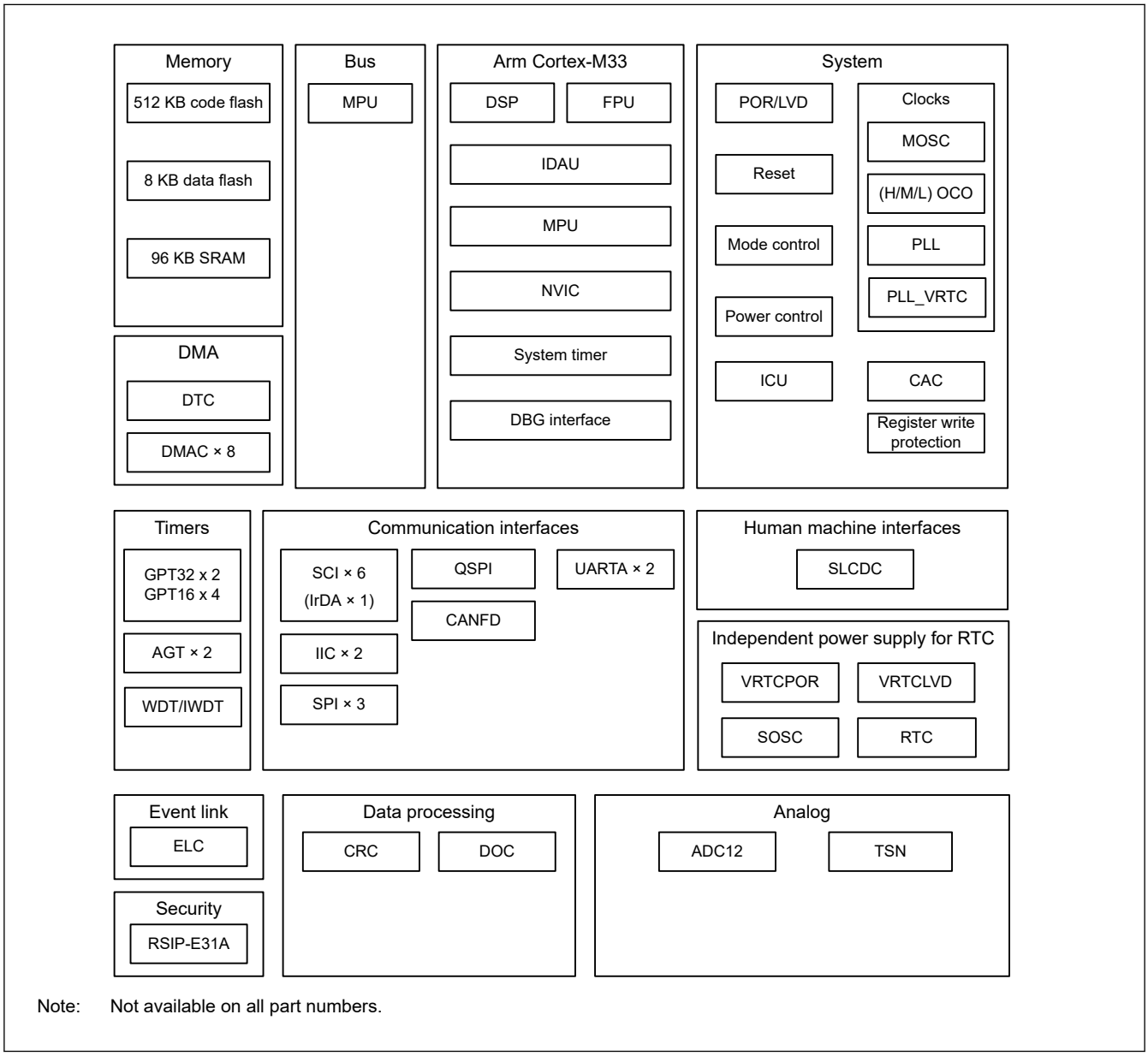

Figure 1.1 Block diagram

1.3 Part Numbering

Figure 1.2 shows the product part number information, including memory capacity and package type. Table 1.14 shows a list of products.

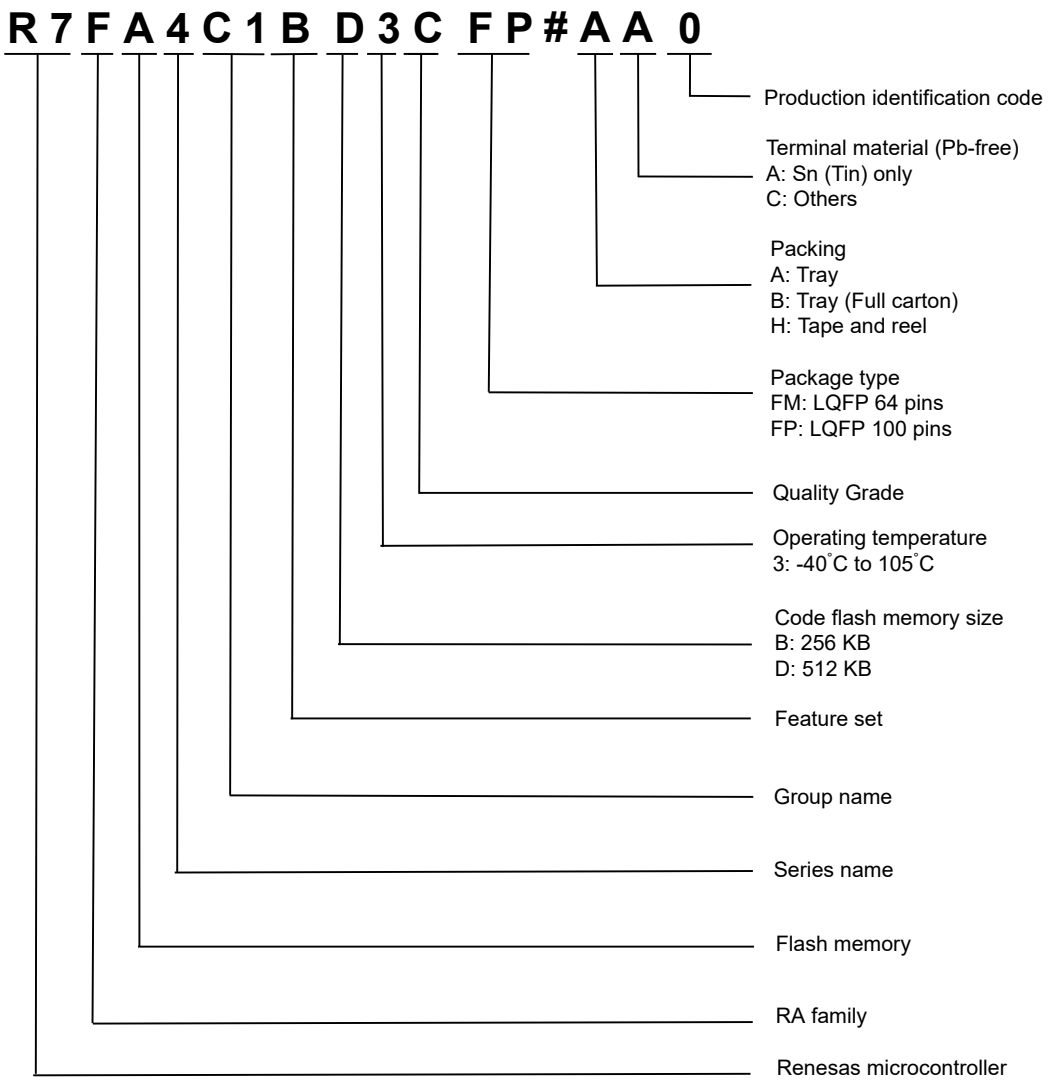

Note: Check the order screen for each product on the Renesas website for valid symbols after the #.

Figure 1.2 Part numbering scheme

Table 1.14 Product list

Product part number	Package code	Code flash	Data flash	SRAM	Operating temperature
R7FA4C1BD3CFP	PLQP0100KB-B	512 KB	8 KB	96 KB	-40 to +105 °C
R7FA4C1BD3CFM	PLQP0064KB-C				
R7FA4C1BB3CFP	PLQP0100KB-B	256 KB	8 KB	96 KB	-40 to +105 °C
R7FA4C1BB3CFM	PLQP0064KB-C				

1.4 Function Comparison

Table 1.15 Function comparison

Parts number		R7FA4C1BD3CFP R7FA4C1BB3CFP	R7FA4C1BD3CFM R7FA4C1BB3CFM
Pin count		100	64
Package		LQFP	LQFP
Code flash memory		512 KB 256 KB	
Data flash memory		8 KB	
SRAM		96 KB	
	Parity	64 KB	
	ECC	32 KB	
DMA	DTC	Yes	
	DMAC	8	
System	CPU clock	80 MHz (max.)	
	CPU clock sources	MOSC, SOSC, HOCO, MOCO, LOCO, PLL	
	CAC	Yes	
	WDT/IWDT	Yes	
Communication	SCI*1	6	
	IIC	2	
	UARTA	2	
	SPI	3	
	CANFD	1	
	QSPI	Yes	
Timers	GPT32*1	2	
	GPT16*1	4	
	AGT*1	2	
	RTC	Yes	
Analog	ADC12	Unit 0: 16	Unit 0: 12
	TSN	Yes	
HMI	SLCDC	48 seg × 4 com 44 seg × 8 com	20 seg × 4 com 16 seg × 8 com
Data processing	CRC	Yes	
	DOC	Yes	
Event control	ELC	Yes	
Security		RSIP-E31A, TrustZone, and Lifecycle management	
I/O ports	I/O pins	80	46
	Input pins	3	3
	Pull-up resistors	80	46
	N-ch open-drain outputs	73	39
	5-V tolerance	4	4

Note 1. Available pins depend on the pin count. For details, see section 1.7. Pin Lists.

1.5 Pin Functions

Table 1.16 Pin functions (1 of 3)

Function	Signal	I/O	Description
Power supply	VCC	Input	Power supply pin. Connect it to the system power supply. Connect this pin to VSS by a 0.1-μF capacitor. The capacitor should be placed close to the pin.
	VCL/VCL0	I/O	Connect this pin to the VSS pin by the smoothing capacitor used to stabilize the internal power supply. Place the capacitor close to the pin.
	VSS	Input	Ground pin. Connect it to the system power supply (0 V).
	VRTC	Input	Independent power supply for sub-clock oscillator (XCIN, XCOUT) and RTC (RTCIC0).
Voltage detector	EXLVD	Input	Low voltage detector for external pin.
	EXLVDVBAT	Input	Low voltage detector for battery backup.
Clock	XTAL	Output	Pins for a crystal resonator. An external clock signal can be input through the EXTAL pin.
	EXTAL	Input	
	XCIN	Input	Input/output pins for the sub-clock oscillator. Connect a crystal resonator between XCOUT and XCIN.
	XCOUT	Output	
	CLKOUT	Output	Clock output pin
Operating mode control	MD	Input	Pin for setting the operating mode. The signal level on this pin must not be changed during operation mode transition on release from the reset state.
System control	RES	Input	Reset signal input pin. The MCU enters the reset state when this signal goes low.
CAC	CACREF	Input	Measurement reference clock input pin
On-chip emulator	SWDIO	I/O	Serial wire debug data input/output pin
	SWCLK	Input	Serial wire clock pin
Interrupt	NMI	Input	Non-maskable interrupt request pin
	IRQn	Input	Maskable interrupt request pins
GPT	GTETRGA, GTETRGB, GTETRGC, GTETRGD	Input	External trigger input pins
	GTIOCnA, GTIOCnB	I/O	Input capture, output compare, or PWM output pins
	GTIU	Input	Hall sensor input pin U
	GTIV	Input	Hall sensor input pin V
	GTIW	Input	Hall sensor input pin W
	GTOUUP	Output	3-phase PWM output for BLDC motor control (positive U phase)
	GTOULO	Output	3-phase PWM output for BLDC motor control (negative U phase)
	GTOVUP	Output	3-phase PWM output for BLDC motor control (positive V phase)
	GTOVLO	Output	3-phase PWM output for BLDC motor control (negative V phase)
	GTOWUP	Output	3-phase PWM output for BLDC motor control (positive W phase)
	GTOWLO	Output	3-phase PWM output for BLDC motor control (negative W phase)
AGT	AGTEEn	Input	External event input enable signals
	AGTIOn	I/O	External event input and pulse output pins
	AGTOn	Output	Pulse output pins
	AGTOAn	Output	Output compare match A output pins
	AGTOBn	Output	Output compare match B output pins

Table 1.16 Pin functions (2 of 3)

Function	Signal	I/O	Description
RTC	RTCOUT	Output	Output pin for 1-Hz or 64-Hz clock
	RTCIC0	Input	Time capture event input pin
SCI	SCKn	I/O	Input/output pins for the clock (clock synchronous mode)
	RXDn	Input	Input pins for received data (asynchronous mode/clock synchronous mode)
	TXDn	Output	Output pins for transmitted data (asynchronous mode/clock synchronous mode)
	CTSn_RTSn	I/O	Input/output pins for controlling the start of transmission and reception (asynchronous mode/clock synchronous mode), active-low.
	CTSn	Input	Input for the start of transmission.
	SCLn	I/O	Input/output pins for the IIC clock (simple IIC mode)
	SDAn	I/O	Input/output pins for the IIC data (simple IIC mode)
	SCKn	I/O	Input/output pins for the clock (simple SPI mode)
	MISOn	I/O	Input/output pins for slave transmission of data (simple SPI mode)
	MOSIn	I/O	Input/output pins for master transmission of data (simple SPI mode)
	RXDXn	Input	Input pins for received data (Simple LIN Mode)
	TXDXn	Output	Output pins for transmitted data (Simple LIN Mode)
	SIOXn	I/O	Input/output pins for received or transmitted data (Simple LIN Mode)
	SSn	Input	Chip-select input pins (simple SPI mode), active-low
IIC	SCLn	I/O	Input/output pins for the clock
	SDAn	I/O	Input/output pins for data
UARTA	RxDAn	Input	Serial data input signal
	TxDAn	Output	Serial data output signal
	CLKAn	Output	Serial clock output signal
SPI	RSPCKA, RSPCKB, RSPCKC	I/O	Clock input/output pin
	MOSIA, MOSIB, MOSIC	I/O	Input or output pin for data output from the master
	MISOA, MISOB, MISOC	I/O	Input or output pin for data output from the slave
	SSLA0, SSLB0, SSLC0	I/O	Input or output pin for slave selection
	SSLA1 to SSLA3, SSLB1 to SSLB3, SSLC1 to SSLC3	Output	Output pins for slave selection
CANFD	CRXn	Input	Receive data
	CTXn	Output	Transmit data
QSPI	QSPCLK	Output	QSPI clock output pin
	QSSL	Output	QSPI slave output pin
	QIO0 to QIO3	I/O	Data0 to Data3

Table 1.16 Pin functions (3 of 3)

Function	Signal	I/O	Description
Analog power supply	AVCC0	Input	Analog voltage supply pin. This is used as the analog power supply for the respective modules. Supply this pin with the same voltage as the VCC pin.
	AVSS0	Input	Analog ground pin. This is used as the analog ground for the respective modules. Supply this pin with the same voltage as the VSS pin.
	VREFH0	Input	Analog reference voltage supply pin for the ADC12. Connect this pin to AVCC0 when not using the ADC12.
	VREFL0	Input	Analog reference ground pin for the ADC12. Connect this pin to AVSS0 when not using the ADC12.
ADC12	AN0n	Input	Input pins for the analog signals to be processed by the A/D converter.
	ADTRG0	Input	Input pins for the external trigger signals that start the A/D conversion, active-low.
SLCDC	VL1, VL2, VL3, VL4	I/O	Voltage pin for driving the LCD
	CAPH, CAPL	I/O	Capacitor connection for the LCD controller/driver
	COM0 to COM7	Output	Common signal output pins for the LCD controller/driver
	SEG0 to SEG47	Output	Segment signal output pins for the LCD controller/driver
I/O ports	Pmn	I/O	General-purpose input/output pins (m: port number, n: pin number)
	P200	Input	General-purpose input pin

1.6 Pin Assignments

The following figures show the pin assignments from the top view.

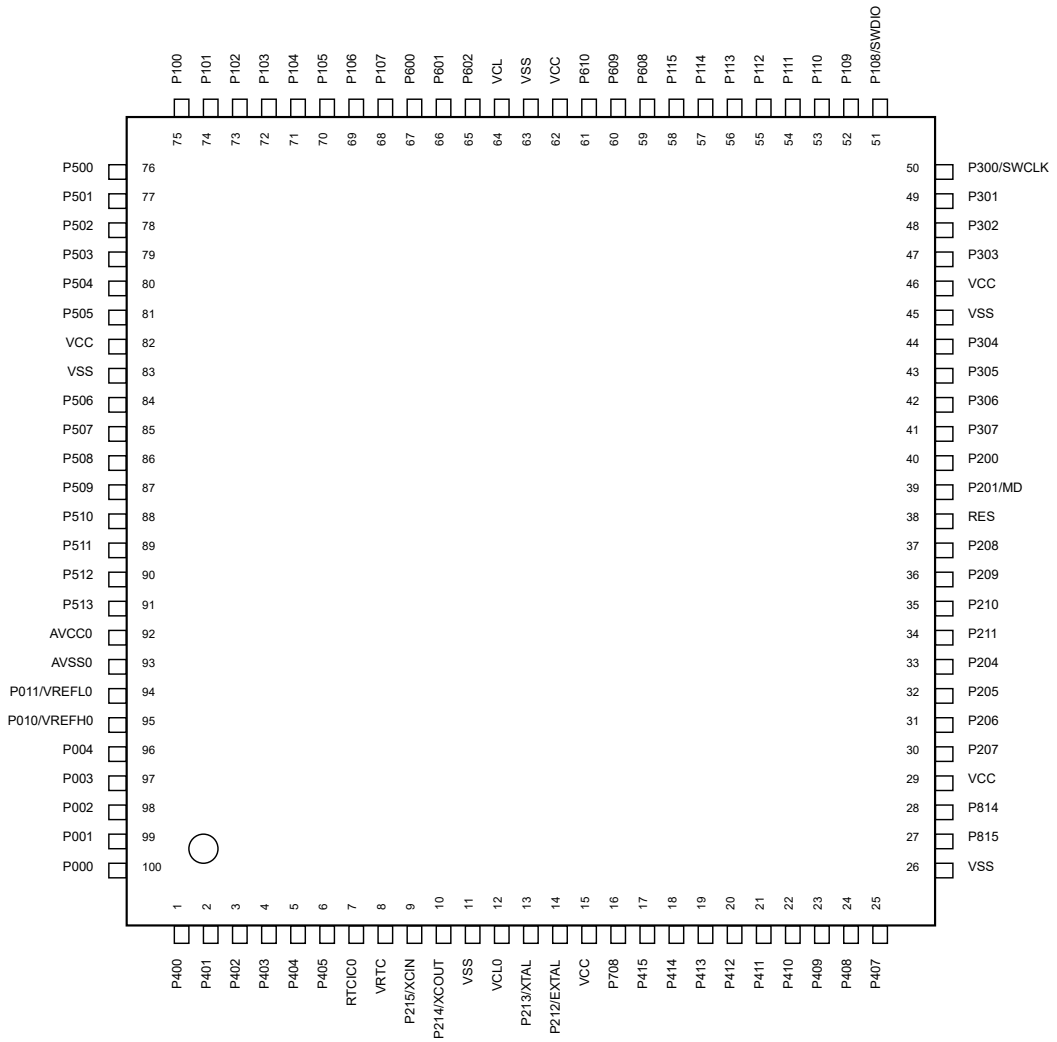

Figure 1.3 Pin assignment for LQFP 100-pin

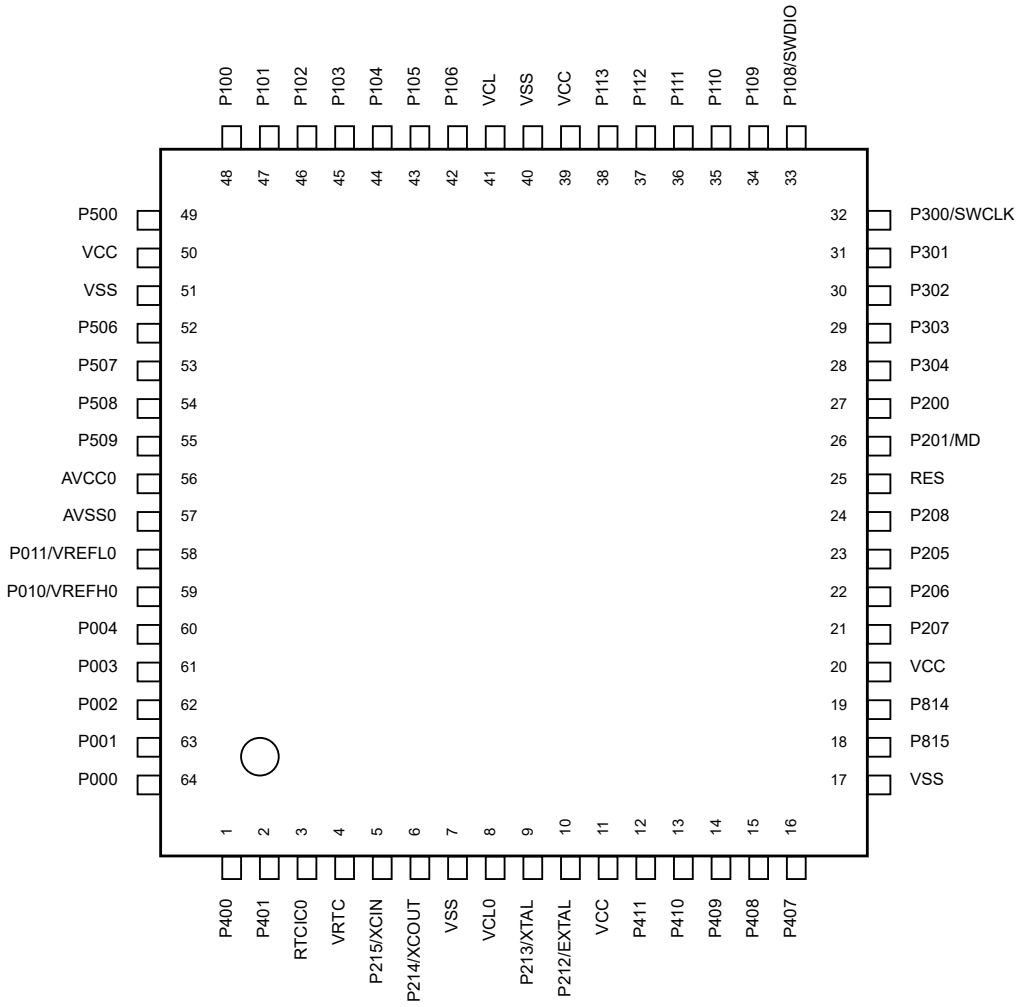

Figure 1.4 Pin assignment for LQFP 64-pin

1.7 Pin Lists

Table 1.17 Pin list (1 of 4)

LQFP100	LQFP64	Power, System, Clock, Debug, CAC	I/O ports	Ex. Interrupt	SCI/IIC/ CANFD/SPI/QSPI/ UARTA	GPT/AGT/RTC	ADC12	SLCDC
1	1	—	P400	IRQ0	TXD1/SDA1/ MOSI1/TXDX1/ SIOX1/SCL1_A	GTETRGB/ GTIOC2A/AGTIO1	—	SEG4
2	2	—	P401	IRQ5	RXD1/SCL1/ MISO1/RXDX1/ SDA1_A/CRX0	GTETRGA/ GTIOC2B	—	SEG5
3	—	CACREF	P402	IRQ4	CTS_RTS1/SS1/ CTX0	GTETRGC/ AGTIO0/AGTIO1	—	SEG6
4	—	—	P403	IRQ14	SCK1	AGTIO0/AGTIO1	—	SEG7
5	—	—	P404	IRQ15	TXD5/SDA5/ MOSI5	GTIOC1B/ AGTIO0/AGTIO1	—	SEG23
6	—	—	P405	—	RXD5/SCL5/ MISO5	GTIOC1A	—	SEG24
7	3	RTCIC0	—	—	—	—	—	—
8	4	VRTC	—	—	—	—	—	—
9	5	XCIN	P215	—	—	—	—	—
10	6	XCOUT	P214	—	—	—	—	—
11	7	VSS	—	—	—	—	—	—
12	8	VCL0	—	—	—	—	—	—
13	9	XTAL	P213	IRQ2	TXD0/SDA0/ MOSI0	GTETRGC/ GTIOC0A	—	—
14	10	EXTAL	P212	IRQ3	RXD0/SCL0/ MISO0	GTETRGD/ GTIOC0B/ AGTEE1	—	—
15	11	VCC	—	—	—	—	—	—
16	—	CACREF	P708	IRQ11	—	—	—	SEG8
17	—	—	P415	IRQ8	—	GTIOC0A	—	SEG9
18	—	—	P414	IRQ9	SSLB3_A	GTIOC0B	—	SEG10
19	—	—	P413	—	SSLB2_A	GTOUUP	—	SEG11
20	—	—	P412	—	CTS3/SSLB1_A	GTOULO/AGTEE1	—	SEG12
21	12	—	P411	IRQ4	CTS_RTS3/SS3/ SSLB0_A	GTOVUP/AGTOA1	—	VL1
22	13	—	P410	IRQ5	SCK3/MOSIB_A	GTOVLO/AGTOB1	—	VL2
23	14	—	P409	IRQ6	TXD3/SDA3/ MOSI3/MISO_A	GTOWUP	—	VL4
24	15	—	P408	IRQ7	CTS_RTS4/SS4/ RXD3/SCL3/ MISO3/ RSPCKB_A	GTOWLO/ GTIOC2B	—	VL3
25	16	—	P407	—	CTS4	GTIOC2A/ AGTIO0/RTCOUT	ADTRG0	SEG13
26	17	VSS	—	—	—	—	—	—
27	18	—	P815	—	CRX0/TxDA1	—	—	CAPH
28	19	—	P814	—	CTX0/RxDA1	—	—	CAPL

Table 1.17 Pin list (2 of 4)

LQFP100	LQFP64	Power, System, Clock, Debug, CAC	I/O ports	Ex. Interrupt	SCI/IIC/ CANFD/SPI/QSPI/ UARTA	GPT/AGT/RTC	ADC12	SLCDC
29	20	VCC	—	—	—	—	—	—
30	21	—	P207	—	TXD4/SDA4/ MOSI4/QSSL	GTIOC3A	—	—
31	22	—	P206	IRQ0	RXD4/SCL4/ MISO4	GTIU/GTIOC3B	—	—
32	23	CLKOUT	P205	IRQ1	SCK4	GTIV/GTIOC4A/ AGTO1	—	COM0
33	—	—	P204	—	CTS_RTS4/SS4/ SSLA0_A/ QSPCLK	GTIU	—	SEG14
34	—	—	P211	—	MOSIA_A/QIO0	GTIV	—	SEG15
35	—	—	P210	—	MISOA_A/QIO1	GTIW	—	SEG16
36	—	—	P209	—	RSPCKA_A/QIO2	GTOVUP	—	SEG17
37	24	—	P208	IRQ12	QIO3	GTOVLO	—	COM1
38	25	RES	—	—	—	—	—	—
39	26	MD	P201	—	—	—	—	—
40	27	—	P200	NMI	—	—	—	—
41	—	—	P307	—	—	GTOUUP	—	SEG18
42	—	—	P306	—	TxDA0	GTOULO	—	SEG19
43	—	—	P305	IRQ8	RxDA0	GTOWUP	—	SEG20
44	28	—	P304	IRQ9	CTS_RTS5/SS5/ CLKA0	GTOWLO/ GTIOC3A	—	COM2
45	—	VSS	—	—	—	—	—	—
46	—	VCC	—	—	—	—	—	—
47	29	—	P303	—	SCK5	GTIOC3B	—	COM3
48	30	—	P302	IRQ5	TXD5/SDA5/ MOSI5/SCL0_A/ SSLA3_B	GTOUUP/ GTIOC4A	ADTRG0	SEG21
49	31	—	P301	IRQ6	RXD5/SCL5/ MISO5/SDA0_A/ SSLA2_B	GTOULO/ GTIOC4B/AGTIO0	—	SEG22
50	32	SWCLK	P300	—	CTS5/SSLA1_B	GTOUUP/ GTIOC0A	—	SEG23
51	33	SWDIO	P108	—	CTS_RTS9/SS9/ SSLA0_B	GTOULO/ GTIOC0B	—	SEG24
52	34	CLKOUT	P109	—	TXD9/SDA9/ MOSI9/MOSIA_B	GTOVUP/ GTIOC1A	—	COM4/ SEG0
53	35	—	P110	IRQ3	RXD9/SCL9/ MISO9/MISOA_B	GTOVLO/ GTIOC1B	—	COM5/ SEG1
54	36	—	P111	IRQ4	SCK9/RSPCKA_B	—	—	COM6/ SEG2
55	37	—	P112	—	CTS_RTS9/SS9/ SSLA0_B/QSSL	—	—	COM7/ SEG3
56	38	—	P113	IRQ10	—	AGTIO1	—	SEG25
57	—	—	P114	—	CTS9	—	—	SEG26

Table 1.17 Pin list (3 of 4)

LQFP100	LQFP64	Power, System, Clock, Debug, CAC	I/O ports	Ex. Interrupt	SCI/IIC/ CANFD/SPI/QSPI/ UARTA	GPT/AGT/RTC	ADC12	SLCDC
58	—	—	P115	—	TXD1/SDA1/ MOSI1/TXDX1/ SIOX1	GTIOC4A	—	SEG27
59	—	—	P608	—	RXD1/SCL1/ MISO1/RXDX1	GTIOC4B	—	SEG28
60	—	—	P609	—	SCK1	GTIOC5A	—	SEG29
61	—	—	P610	—	CTS_RTS1/SS1	GTIOC5B	—	SEG30
62	39	VCC	—	—	—	—	—	—
63	40	VSS	—	—	—	—	—	—
64	41	VCL	—	—	—	—	—	—
65	—	—	P602	—	—	—	—	SEG31
66	—	—	P601	—	—	GTIOC2A	—	SEG32
67	—	CACREF/ CLKOUT	P600	—	—	GTIOC2B	—	SEG33
68	—	—	P107	—	—	AGTOA0	—	SEG34
69	42	—	P106	—	CTS3/SSLC3_A	GTETRGD/ AGTOB0	—	SEG35
70	43	—	P105	IRQ0	CTS_RTS3/SS3/ SSLC2_A	GTETRGA/ GTIOC1A	—	SEG36
71	44	—	P104	IRQ1	SCK3/SSLC1_A/ QSPCLK	GTETRGB/ GTIOC1B	—	SEG37
72	45	—	P103	—	CTS_RTS0/SS0/ TXD3/SDA3/ MOSI3/CRX0/ SSLC0_A/QIO2	GTOWUP	—	SEG38
73	46	—	P102	—	SCK0/RXD3/ SCL3/MISO3/ CTX0/RSPCKC_A/ QIO3	GTOWLO/AGTO0	ADTRG0	SEG39
74	47	—	P101	IRQ1	TXD0/SDA0/ MOSI0/SCL0_B/ MOSIC_A/QIO0	GTETRGB/ GTIOC5A/ AGTEE0	—	SEG40
75	48	—	P100	IRQ2	RXD0/SCL0/ MISO0/SDA0_B/ MISOC_A/QIO1	GTETRGA/ GTIOC5B/AGTIO0	—	SEG41
76	49	CACREF	P500	—	CTS0/QSPCLK	GTIU/AGTOA0	AN021	SEG42
77	—	—	P501	IRQ11	QSSL	GTIV/AGTOB0	—	SEG43
78	—	—	P502	IRQ12	QIO0	GTIW	—	SEG44
79	—	—	P503	—	QIO1	GTETRGC	—	SEG45
80	—	—	P504	—	QIO2	GTETRGD	—	SEG46
81	—	—	P505	IRQ14	QIO3	—	—	SEG47
82	50	VCC	—	—	—	—	—	—
83	51	VSS	—	—	—	—	—	—
84	52	—	P506	IRQ13	TXD5/SDA5/ MOSI5/MOSIC_B	GTIOC4A	AN020	—

Table 1.17 Pin list (4 of 4)

LQFP100	LQFP64	Power, System, Clock, Debug, CAC	I/O ports	Ex. Interrupt	SCI/IIC/ CANFD/SPI/QSPI/ UARTA	GPT/AGT/RTC	ADC12	SLCDC
85	53	—	P507	—	RXD5/SCL5/ MISO5/MISOC_B/ CLKA0	GTIOC4B	AN019	—
86	54	EXLVDVBA T	P508	—	CTS_RTS5/SS5/ RSPCKC_B/ TxDA0	—	AN018	—
87	55	EXLVD	P509	—	SCK5/SSLC0_B/ RxDA0	—	AN017	—
88	—	—	P510	—	TXD9/SDA9/ MOSI9/SSLC1_B	—	AN025	—
89	—	—	P511	—	RXD9/SCL9/ MISO9/SSLC2_B/ CLKA1	—	AN024	—
90	—	—	P512	—	CTS_RTS9/SS9/ SSLC3_B/TxDA1	—	AN023	—
91	—	—	P513	IRQ15	SCK9/RxDA1	—	AN022	—
92	56	AVCC0	—	—	—	—	—	—
93	57	AVSS0	—	—	—	—	—	—
94	58	VREFL0	P011	IRQ11	—	—	AN004	—
95	59	VREFH0	P010	IRQ10	—	—	AN003	—
96	60	—	P004	IRQ9	—	—	AN002	—
97	61	—	P003	—	—	—	AN001	—
98	62	—	P002	IRQ8	—	—	AN000	—
99	63	—	P001	IRQ7	—	—	AN006	—
100	64	—	P000	IRQ6	—	—	AN005	—

2. CPU

The MCU is based on the Arm® Cortex®-M33 core.

2.1 Overview

2.1.1 CPU

- Arm Cortex-M33
  - Revision: r0p4-00rel1
  - Armv8-M architecture profile
  - Single Precision Floating-Point Unit compliant with the ANSI/IEEE Std 754-2008
- SAU (Security Attribution Unit): 0 region
- IDAU (Implementation Defined Attribution Unit): 8 regions
  - Code flash (secure/non-secure callable/non-secure)
  - Data Flash (secure/non-secure)
  - SRAM0 (secure/non-secure callable/non-secure)
- Memory Protection Unit (MPU)
  - Armv8 Protected Memory System Architecture (PMSAv8)
  - Secure MPU (MPU_S): 8 regions
  - Non-secure MPU (MPU_NS): 8 regions
- SysTick timer
  - Two SysTick timers: Secure and Non-secure instance
  - Driven by SysTick timer clock (SYSTICCLK) or system clock (ICLK)

See reference 1. and reference 2. in section 2.13. References for details.

2.1.2 Debug

- Arm® CoreSight™ ETM-M33
  - Revision: r0p2-00rel0
  - ARM ETM Architecture version 4.2
- Instrumentation Trace Macrocell (ITM)
- Data Watchpoint and Trace Unit (DWT)
  - 4 comparators for watchpoints and triggers
- Breakpoint Unit (BPU)
  - Breakpoint function is available.
    - 8 instruction comparators
    - 0 literal comparators
- Time Stamp Generator (TSG)
  - Time stamp for ETM and ITM
  - Driven by CPU clock
- Debug Register Module (DBGREG)
  - Reset control
  - Halt control
- Debug Access Port (DAP)

  - Serial Wire Debug Port (SW-DP)
- Cross Trigger Interface (CTI)
- Embedded Trace Buffer (ETB)
  - CoreSight Trace Memory Controller with ETB configuration
  - Buffer size: 2 KB

See reference 1. and reference 2. in section 2.13. References for details.

2.1.3 Operating Frequency

The operating frequencies for the MCU are as follows:

- CPU: maximum 80 MHz
- Serial Wire Debug (SWD) interface: maximum 12.5 MHz

2.1.4 Block Diagram

Figure 2.1 shows a block diagram of the Cortex-M33 core.

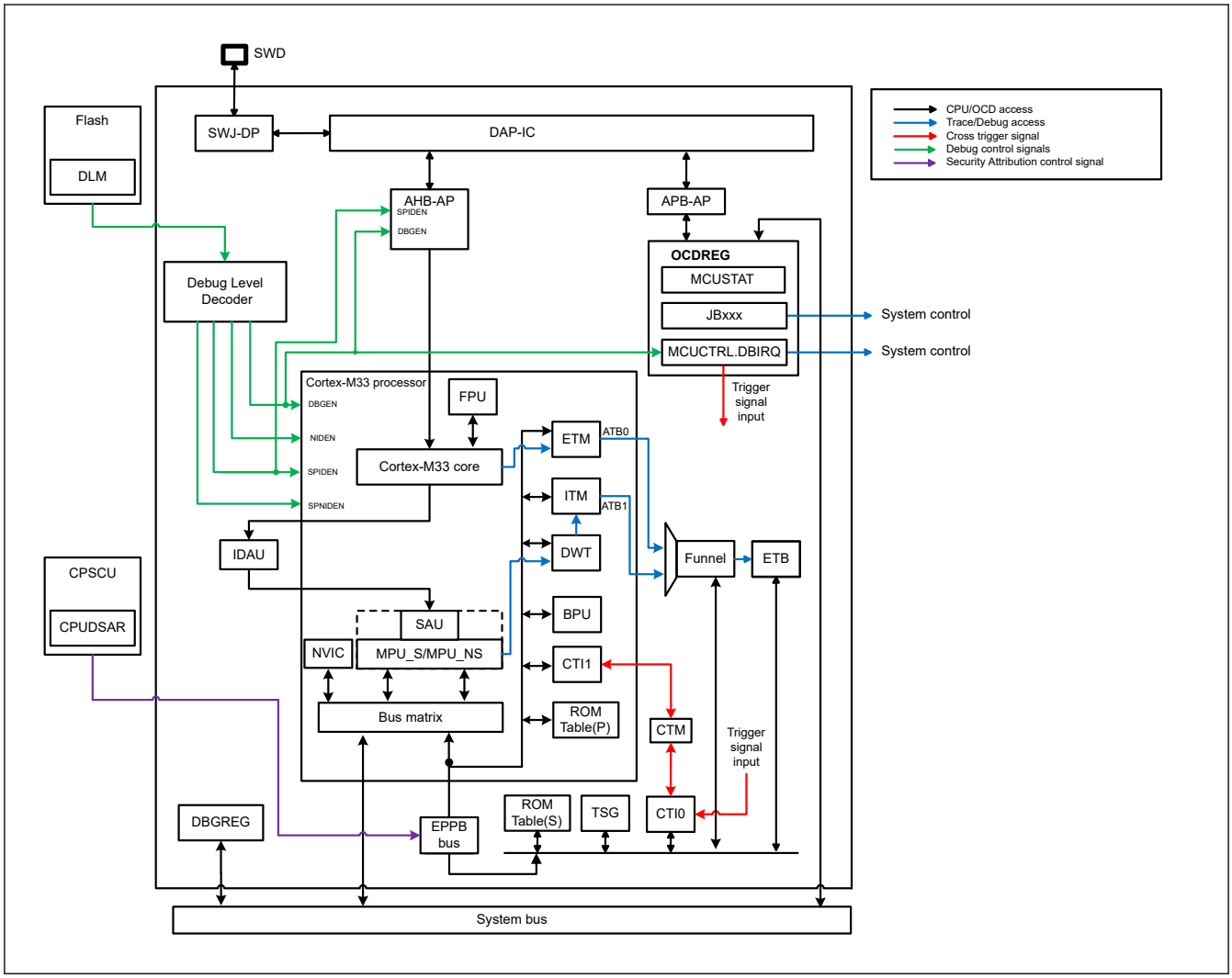

Figure 2.1 Cortex-M33 block diagram

2.2 Implementation Options

Table 2.1 shows the implementation options of the MCU.

Table 2.1 Implementation options

Option	Implementation
SAU	Not included
IDAU	Included, 8 regions
MPU	Included, 8 regions for Secure and 8 regions for Non-secure
BPU	Included
Cross Trigger Interface (CTI)	Included
DWT	Included
Number of Wakeup Interrupt Controllers (WIC)	Not included ICU can wake up CPU instead of WIC. See section 12, Interrupt Controller Unit (ICU) for details.
TPIU	Not included
FPU	Included
DSP	Included
Embedded Trace Macrocell (ETM)	Included
Sleep mode power saving	Sleep mode and other low power modes are supported. For more details, see section 10, Low Power Modes. Note: SCB.SCR.SLEEPDEEP is ignored.
Interrupts	66
Priority bits	4 bits (16 levels)
Endianness	Little-endian
SysTick	Included
SYST_CALIB register (0x4000_0147)	Bit [31] = 0 Reference clock provided Bit [30] = 1 TERMS value is inexact Bits [29:24] = 0x00 Reserved Bits [23:0] = 0x000147 TERM: (32768 × 10 ms) - 1/32.768 kHz = 326.66 decimal = 327 with skew = 0x000147
Event input/output	Not implemented
Global exclusive monitor	Not implemented
System reset request output	The SYSRESETREQ bit in Application Interrupt and Reset Control Register causes a CPU reset

2.3 SWD Interface

Table 2.2 shows the SWD pins.

Table 2.2 SWD pins

Name	I/O	Function	When not in use
SWCLK	Input	Serial wire clock pin	Pull-up
SWDIO	I/O	Serial wire data I/O pin	Pull-up

2.4 Security Attribution for Memory

In this MCU, SAU is not implemented and IDAU performs region definition for memory. IDAU divides the memory into 8 different areas as shown in Figure 2.2.

The code flash, the data flash, and the SRAM are divided into Secure (S), Non-secure (NS) and Non-secure callable (NSC) regions. These memory security attributions are set into the nonvolatile memory by the serial programming command when the device lifecycle is in SSD state. These memory security attributions are loaded into the IDAU and the memory controller before application execution. These memory security attributions cannot be updated by application but can read through the dedicated registers.

Note: When configuring, the memory regions should satisfy the setting condition of minimum address unit shown in Table 2.3.

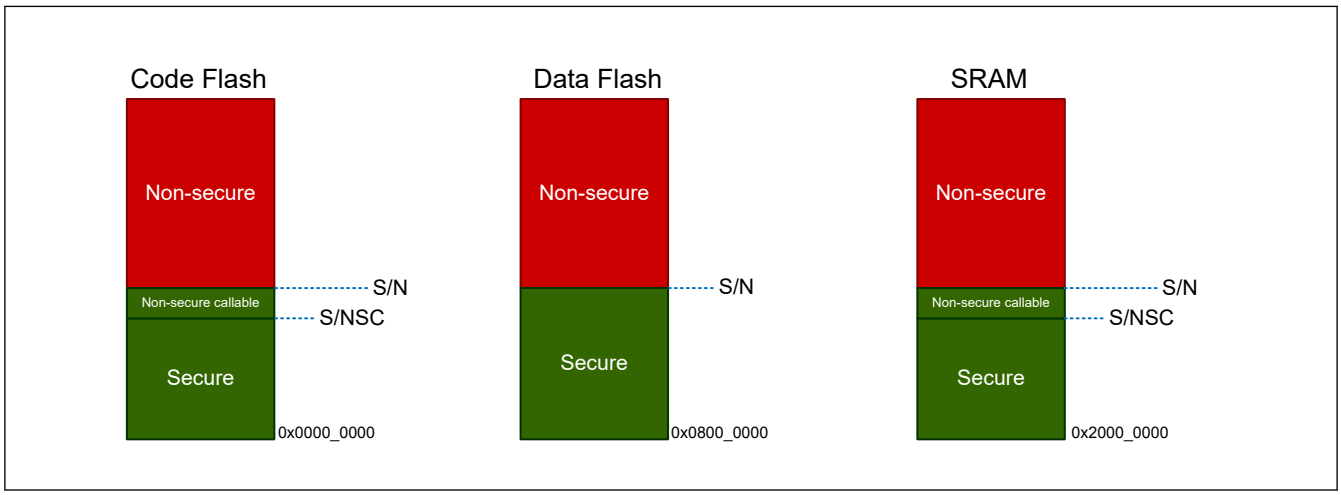

Figure 2.2 Memory partitioning

Table 2.3 S/NS and S/NSC boundary list

Boundary	Code flash	Data flash	SRAM
S/NS	32 KB	1 KB	8 KB
S/NSC	1 KB	—	1 KB

Each region has its dedicated ID as follows. For more details, see section 2.13. References.

IREGION (IDAU region number)	Description
0x0D	Non-secure SRAM
0x0E	Non-secure callable SRAM
0x0F	Secure SRAM
0x09	Non-secure data flash
0x0B	Secure data flash
0x05	Non-secure code flash
0x06	Non-secure callable code flash
0x07	Secure code flash

2.5 Debug Function

2.5.1 Debugger Connectivity

In this MCU, debug function is considered in three levels, DBG0, DBG1, DBG2. At DBG0, no debug function is available. DBG1 level is defined as non-secure debug in ARMv-8 and the debugger can only access defined non-secure debug accessible regions. DBG2 level is defined as secure debug in ARMv-8 and at this level, nonsecure and secure debug function is enabled and can be accessible from the debugger.

Debug level is determined by the Device Lifecycle Management (DLM) state of the product.

See Figure 2.1 for debugger accessible regions.

Table 2.4 shows the CPU debug function and conditions.

Table 2.4 CPU debug function and conditions

Condition			Permitted debug function
OCD connect*1	**DLM State**	**Debug level**	**Description**
Connected	SSD	DBG2	All debug functions are available
Connected	NSECSD	DBG1	Only Non-secure debug function is available
Connected	DPL	DBG0	Debugger connection is not available
Connected	LCK_DBG	DBG0	Debugger connection is not available
Connected	LCK_BOOT	DBG0	Debugger connection is not available
Connected	RMA_REQ	DBG0	Debugger connection is not available
Connected	RMA_ACK	DBG2	All debug functions are available

Note 1. OCD connect is determined by the CDBGPWRUPREQ bit output in the SWJ-DP register. The bit can only be written by the OCD. However, the level of the bit can be confirmed by reading the DBGSTR.CDBGPWRUPREQ bit.

2.5.2 Emulator Connection

Renesas provides the emulator which supports both debugging using SWD communication and serial programming using SCI or SWD communication.

Table 2.5 shows the pinout of 10 pin or 20 pin socket pinouts when using this emulator.

Table 2.5 Pin assign for emulator

Pin No.	SWD	Serial programming using SCI
1	VCC	VCC
2	P108/SWDIO	NC
4	P300/SWCLK	P201/MD
6	NC	P109/TXD9
8	NC	P110/RXD9
9	GND detect	GND detect
10	nRESET	nRESET
12	NC	NC
14	NC	NC
16	NC	NC
18	NC	NC
20	NC	NC
3, 5, 15, 17, 19	GND	GND
7	NC	NC
11, 13	NC	NC

2.5.3 Self-Hosted Debug Function

As described in section 2.6.6. CPUDSAR : CPU Debug Security Attribution Register, at the initial setting access from the CPU in non-secure state to CoreSight debug components is protected, that is, the non-secure access to CoreSight debug components from the self-hosted debugger is not allowed when the debug level is DBG2 at the initial setting. Therefore, the CPUDSAR.CPUDSA0 must be set to 1 to enable the self-hosted debug for CPU in non-secure state.

Note: There is no restriction for the self-hosted debug function while the CPU is in the secure state.

2.5.4 Effect of Debug Function

The debug function effects inside and outside of CPU.

2.5.4.1 Low power mode

All CoreSight debug components can store the register settings even when the CPU enters Software Standby or Snooze mode. However, AHB-AP cannot respond to On-Chip Debug (OCD) access in these low power modes. The OCD must wait for cancellation of the low power mode to access the CoreSight debug components. To request low power mode cancellation, the OCD can set the DBIRQ bit in the MCUCTRL register. For details, see section 2.6.5.2. MCUCTRL : MCU Control Register.

2.5.4.2 Reset

In OCD mode, some resets depend on the CPU status and the DBGSTOPCR register setting.

Table 2.6 Reset or interrupt and mode setting

Reset or interrupt name	Control in On-Chip Debug (OCD) mode	
	OCD break mode	OCD run mode
RES pin reset	Same as user mode	
Power-on reset	Same as user mode	
Independent watchdog timer reset/interrupt	Does not occur*1	Depends on DBGSTOPCR setting
Watchdog timer reset/interrupt	Does not occur*1	Depends on DBGSTOPCR setting
Voltage monitor 0 reset	Depends on DBGSTOPCR setting	
Voltage monitor 1 reset/interrupt	Depends on DBGSTOPCR setting	
Voltage monitor 2 reset/interrupt	Depends on DBGSTOPCR setting	
SRAM parity error reset/interrupt	Depends on DBGSTOPCR setting	
SRAM ECC error reset/interrupt	Depends on DBGSTOPCR setting	
Cache Parity error reset/interrupt	Depends on DBGSTOPCR setting	
Bus master MPU error reset/interrupt	Same as user mode	
Software reset	Same as user mode	

Note: In OCD break mode, the CPU is halted. In OCD run mode, the CPU is in OCD mode and the CPU is not halted.
Note 1. The IWDT and WDT always stop in this mode.

2.6 Programmers Model

2.6.1 Address Spaces

The MCU debug system includes two CoreSight Access Ports (AP):

- AHB-AP, which is connected to the CPU bus matrix and has the same access to the system address space as the CPU
- APB-AP, which has a dedicated address space (OCD address space) and is connected to the OCDREG registers.

Figure 2.3 shows a block diagram of the AP connection and address spaces.

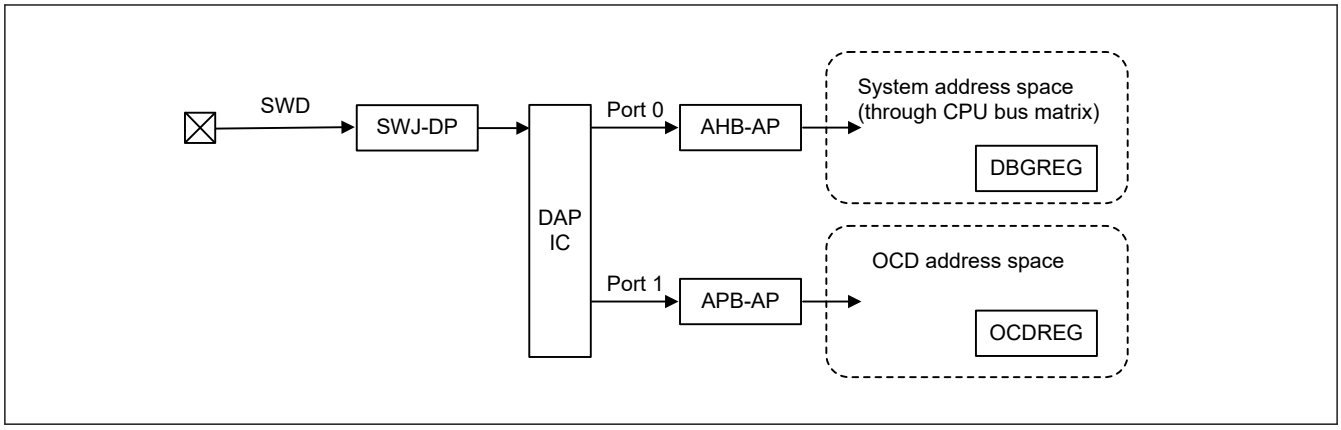

Figure 2.3 SWD authentication block diagram

For debugging purposes, there are two register modules, DBGREG and OCDREG. DBGREG is located in the system address space and can be accessed from the OCD emulator, the CPU, and other bus masters in the MCU. OCDREG is located in the OCD address space and can only be accessed from the OCD tool. The CPU and other bus masters cannot access OCDREG.

2.6.2 Peripheral Address Map

In system address space, the Cortex-M33 core has a Private Peripheral Bus (PPB) which can be accessed only from CPU and OCD emulator. The PPB is expanded from the original implementation of the Cortex-M33 core for this MCU. Table 2.7 shows the address map of the MCU.

Table 2.7 Peripheral address map

Component name	Start address	End address	Note
ITM	0xE000_0000	0xE000_0FFF	See reference 2. in section 2.13. References
DWT	0xE000_1000	0xE000_1FFF	See reference 2. in section 2.13. References
BPU	0xE000_2000	0xE000_2FFF	See reference 2. in section 2.13. References
Secure SCS/SCS	0xE000_E000	0xE000_EFFF	See reference 1. in section 2.13. References
Non-Secure SCS	0xE002_E000	0xE002_EFFF	See reference 2. in section 2.13. References
ETM	0xE004_1000	0xE004_1FFF	See reference 1. in section 2.13. References
CTI1	0xE004_2000	0xE004_2FFF	See reference 4. in section 2.13. References
CTI0	0xE004_4000	0xE004_4FFF	See reference 4. in section 2.13. References
ATB Funnel	0xE004_7000	0xE004_7FFF	See section 2.8. CoreSight ATB Funnel and reference 4. in section 2.13. References
ETB	0xE004_8000	0xE004_8FFF	See reference 4. in section 2.13. References
Time Stamp Generator	0xE004_9000	0xE004_9FFF	See section 2.10. CoreSight Time Stamp Generator and reference 4. in section 2.13. References
System ROM Table	0xE00F_E000	0xE00F_EFFF	See reference 3. in section 2.13. References
Processor ROM Table	0xE00F_F000	0xE00F_FFFF	See reference 2. in section 2.13. References

2.6.3 CoreSight ROM Table

The MCU contains two CoreSight ROM Tables, the processor and system ROM Tables. The Processor ROM Table contains entries which hold a list of debug components inside the processor. The System ROM Table contains entries of Processor ROM Table and others debug components outside the processor.

2.6.3.1 ROM Entries

ROM entries hold a list of components in the system. OCD emulator can use the ROM entries to determine which components are implemented in a system.

Table 2.8 and Table 2.9 show the System ROM entries and Processor ROM entries. See reference 5. in section 2.13. References for details.

Table 2.8 System ROM entries

#	Address	Access size	R/W	Value	Target module pointer
0	0xE00F_E000	32 bits	R	0xFFF46003	CTI0
1	0xE00F_E004	32 bits	R	0xFFF49003	Funnel
2	0xE00F_E008	32 bits	R	0xFFF4A003	ETB
3	0xE00F_E00C	32 bits	R	0xFFF4B003	TSG
4	0xE00F_E010	32 bits	R	0xFFF42002	Reserved
5	0xE00F_E014	32 bits	R	0x00001003	Processor ROM table
6	0xE00F_E018	32 bits	R	0x00000000	End of entries

Table 2.9 Processor ROM Entries

#	Address	Access size	R/W	Value	Target module pointer
0	0xE00F_F000	32 bits	R	0xFFF0F003	SCS
1	0xE00F_F004	32 bits	R	0xFFF02003	DWT
2	0xE00F_F008	32 bits	R	0xFFF03003	BPU
3	0xE00F_F00C	32 bits	R	0xFFF01003	ITM
4	0xE00F_F014	32 bits	R	0xFFF42003	ETM
5	0xE00F_F018	32 bits	R	0xFFF43003	CTI1
6	0xE00F_F020	32 bits	R	0x00000000	End of entries

2.6.3.2 CoreSight Component Registers

The CoreSight ROM Table lists the CoreSight component registers defined in the Arm CoreSight architecture.

Table 2.10 shows the registers. See reference 5. in section 2.13. References for details of each register.

Table 2.10 CoreSight component registers in the CoreSight ROM Table

Name	Address	Access size	R/W	Initial value
PID4	0xE00F_EFD0	32 bits	R	0x00000004
PID5	0xE00F_EFD4	32 bits	R	0x00000000
PID6	0xE00F_EFD8	32 bits	R	0x00000000
PID7	0xE00F_EFDC	32 bits	R	0x00000000
PID0	0xE00F_EFE0	32 bits	R	0x0000006A
PID1	0xE00F_EFE4	32 bits	R	0x00000030
PID2	0xE00F_EFE8	32 bits	R	0x0000000A
PID3	0xE00F_EFEC	32 bits	R	0x00000000
CID0	0xE00F_EFF0	32 bits	R	0x0000000D
CID1	0xE00F_EFF4	32 bits	R	0x00000010
CID2	0xE00F_EFF8	32 bits	R	0x00000005
CID3	0xE00F_EFFC	32 bits	R	0x000000B1

2.6.4 DBGREG Module

The DBGREG module controls the debug functionalities and is implemented as a CoreSight-compliant component.

Table 2.11 shows the DBGREG registers other than the CoreSight component registers.

Table 2.11 Non-CoreSight DBGREG registers

Name		DAP port	Address	Access size	R/W
Debug Status Register	DBGSTR	Port 0	0x4001_B000	32 bits	R
Debug Stop Control Register	DBGSTOPCR	Port 0	0x4001_B010	32 bits	R/W

2.6.4.1 DBGSTR : Debug Status Register

Base address: DBG = 0x4001_B000

Offset address: 0x00

Bit position:	31	30	29	28	27	26	25	24	23	22	21	20	19	18	17	16
Bit field:	—	—	CDBGPWRUPACK	CDBGPWRUPREQ	—	—	—	—	—	—	—	—	—	—	—	—
Value after reset:	0	0	0	0	0	0	0	0	0	0	0	0	0	0	0	0

Bit position:	15	14	13	12	11	10	9	8	7	6	5	4	3	2	1	0
Bit field:	—	—	—	—	—	—	—	—	—	—	—	—	—	—	—	—
Value after reset:	0	0	0	0	0	0	0	0	0	0	0	0	0	0	0	0

Bit	Symbol	Function	R/W
27:0	—	These bits are read as 0.	R
28	CDBGPWRUPREQ	Debug power-up request 0: OCD is not requesting debug power up 1: OCD is requesting debug power up	R
29	CDBGPWRUPACK	Debug power-up acknowledge 0: Debug power-up request is not acknowledged 1: Debug power-up request is acknowledged	R
31:30	—	These bits are read as 0.	R

The DBGSTR register is a status register which indicates the state of the debug power-up request to the MCU from the emulator.

2.6.4.2 DBGSTOPCR : Debug Stop Control Register

Base address: DBG = 0x4001_B000

Offset address: 0x10

Bit position:	31	30	29	28	27	26	25	24	23	22	21	20	19	18	17	16
Bit field:	DBGSTOP_CPER	—	—	—	—	—	DBGSTOP_RECCR	DBGSTOP_RPER	—	—	—	—	—	DBGSTOP_LVD2	DBGSTOP_LVD1	DBGSTOP_LVD0
Value after reset:	0	0	0	0	0	0	0	0	0	0	0	0	0	0	0	0

Bit position:	15	14	13	12	11	10	9	8	7	6	5	4	3	2	1	0
Bit field:	—	—	—	—	—	—	—	—	—	—	—	—	—	—	DBGSTOP_WDT	DBGSTOP_IWDT
Value after reset:	0	0	0	0	0	0	0	0	0	0	0	0	0	0	1	1

Bit	Symbol	Function	R/W
0	DBGSTOP_IWDT	Mask bit for IWDT reset/interrupt in the OCD run mode In the OCD break mode, the reset/interrupt is masked and IWDT counter is stopped, regardless of this bit value. 0: Enable IWDT reset/interrupt 1: Mask IWDT reset/interrupt and stop IWDT counter	R/W
1	DBGSTOP_WDT	Mask bit for WDT reset/interrupt in the OCD run mode In the OCD break mode, the reset/interrupt is masked and WDT counter is stopped, regardless of this bit value. 0: Enable WDT reset/interrupt 1: Mask WDT reset/interrupt and stop WDT counter	R/W
15:2	—	These bits are read as 0. The write value should be 0.	R/W
16	DBGSTOP_LVD0	Mask bit for LVD0 reset 0: Enable LVD0 reset 1: Mask LVD0 reset	R/W
17	DBGSTOP_LVD1	Mask bit for LVD1 reset/interrupt 0: Enable LVD1 reset/interrupt 1: Mask LVD1 reset/interrupt	R/W
18	DBGSTOP_LVD2	Mask bit for LVD2 reset/interrupt 0: Enable LVD2 reset/interrupt 1: Mask LVD2 reset/interrupt	R/W
23:19	—	These bits are read as 0. The write value should be 0.	R/W
24	DBGSTOP_RPER	Mask bit for SRAM parity error reset/interrupt 0: Enable SRAM parity error reset/interrupt 1: Mask SRAM parity error reset/interrupt	R/W
25	DBGSTOP_RECCR	Mask bit for SRAM ECC error reset/interrupt 0: Enable SRAM ECC error reset/interrupt 1: Mask SRAM ECC error reset/interrupt	R/W
30:26	—	These bits are read as 0. The write value should be 0.	R/W
31	DBGSTOP_CPER	Mask bit for Cache SRAM parity error reset/interrupt 0: Enable Cache SRAM parity error reset/interrupt 1: Mask Cache SRAM parity error reset/interrupt	R/W

The Debug Stop Control Register (DBGSTOPCR) controls the functional stop in OCD mode. All bits in the register are regarded as 0 when the MCU is not in OCD mode.

2.6.4.3 DBGREG CoreSight Component Registers

The DBGREG module provides the CoreSight component registers defined in the Arm CoreSight architecture.

Table 2.12 shows the registers. See reference 4. in section 2.13. References for details of each register.

Table 2.12 DBGREG CoreSight component registers (1 of 2)

Name	Address	Access size	R/W	Initial value
PIDR4	0x4001_BFD0	32 bits	R	0x00000004
PIDR5	0x4001_BFD4	32 bits	R	0x00000000
PIDR6	0x4001_BFD8	32 bits	R	0x00000000
PIDR7	0x4001_BFDC	32 bits	R	0x00000000
PIDR0	0x4001_BFE0	32 bits	R	0x00000005
PIDR1	0x4001_BFE4	32 bits	R	0x00000030
PIDR2	0x4001_BFE8	32 bits	R	0x0000000A
PIDR3	0x4001_BFEC	32 bits	R	0x00000000
CIDR0	0x4001_BFF0	32 bits	R	0x0000000D
CIDR1	0x4001_BFF4	32 bits	R	0x000000F0

Table 2.12 DBGREG CoreSight component registers (2 of 2)

Name	Address	Access size	R/W	Initial value
CIDR2	0x4001_BFF8	32 bits	R	0x00000005
CIDR3	0x4001_BFFC	32 bits	R	0x000000B1

2.6.5 OCDREG Module

The OCDREG module are only accessible by the On-Chip Debug (OCD) emulator. OCDREG is implemented as a CoreSight-compliant component.

Table 2.13 lists the OCDREG registers.

Table 2.13 OCDREG registers

Name		DAP port	Address	Access size	R/W
MCU Status Register	MCUSTAT	Port 1	0x8000_0400	32 bits	R
MCU Control Register	MCUCTRL	Port 1	0x8000_0410	32 bits	R/W
SWD Boot Mode Entry Register*1	JBMDR	Port 1	0x8001_1100 0x4001_b100*2	32 bits	R/W
SWD Boot Receive Data Register*1	JBRDR	Port 1	0x8001_1120 0x4001_b120*2	32 bits	R/W
SWD Boot Transmit Data Register*1	JBTDR	Port 1	0x8001_1130 0x4001_b130*2	32 bits	R/W
SWD Boot Status Register*1	JBSTR	Port 1	0x8001_1140 0x4001_b140*2	32 bits	R/W
SWD Boot Interrupt Control Register*1	JBICR	Port 1	0x8001_1150 0x4001_b150*2	32 bits	R/W

Note: OCDREG is located in the dedicated OCD address space. This address map is independent from the system address map.
Note 1. Accessible from both DAP and CPU. Others are DAP only.
Note 2. Address when accessing from CPU

2.6.5.1 MCUSTAT : MCU Status Register

Base address: CPU_OCD = 0x8000_0000

Offset address: 0x400

Bit position:	31	30	29	28	27	26	25	24	23	22	21	20	19	18	17	16
Bit field:	—	—	—	—	—	—	—	—	—	—	—	—	—	—	—	—
Value after reset:	0	0	0	0	0	0	0	0	0	0	0	0	0	0	0	0

Bit position:	15	14	13	12	11	10	9	8	7	6	5	4	3	2	1	0
Bit field:	—	—	SECDBG	DBGFUNCEN	—	—	—	—	—	—	—	—	—	CPUSTOPCLK	CPUSLEEP	—
Value after reset:	0	0	1/0*1	1/0*1	0	0	0	1	0	0	0	0	0	1/0*1	1/0*1	0

Bit	Symbol	Function	R/W
0	—	These bits are read as 0.	R
1	CPUSLEEP	Sleep mode status This bit is unpredictable when the MCU is in Software Standby mode or Snooze mode. 0: CPU is not in Sleep mode 1: CPU in Sleep mode	R
2	CPUSTOPCLK	CPU clock status 0: CPU clock is not stopped 1: CPU clock is stopped	R

Bit	Symbol	Function	R/W
7:3	—	These bits are read as 0.	R
8	—	These bits are read as 1.	R
11:9	—	These bits are read as 0.	R
12	DBGFUNCEN	Debugger status 0: Debugger connection is not available 1: Debugger function is enabled	R
13	SECDBG	Secure Debug status 0: Secure Debug is not available 1: Secure Debug is available	R
31:14	—	These bits are read as 0.	R

Note 1. Depends on the MCU status.

2.6.5.2 MCUCTRL : MCU Control Register

Base address: CPU_OCD = 0x8000_0000

Offset address: 0x410

Bit position:	31	30	29	28	27	26	25	24	23	22	21	20	19	18	17	16
Bit field:	—	—	—	—	—	—	—	—	—	—	—	—	—	—	—	CPUWAIT
Value after reset:	0	0	0	0	0	0	0	0	0	0	0	0	0	0	0	0

Bit position:	15	14	13	12	11	10	9	8	7	6	5	4	3	2	1	0
Bit field:	—	—	—	—	—	—	—	DBIRQ	—	—	—	—	—	—	—	—
Value after reset:	0	0	0	0	0	0	0	0	0	0	0	0	0	0	0	0

Bit	Symbol	Function	R/W
7:0	—	These bits are read as 0. The write value should be 0.	R/W
8	DBIRQ*2	Debug Interrupt Request Writing 1 to the bit wakes up the MCU from low power mode. The condition can be cleared by writing 0 to the DBIRQ bit. 0: Debug interrupt not requested 1: Debug interrupt requested	R/W
15:9	—	These bits are read as 0. The write value should be 0.	R/W
16	CPUWAIT*2	CPU Wait Setting Write 1 to assert CPUWAIT, write 0 to deassert CPUWAIT*1. 0: Clear CPUWAIT to low 1: Set CPUWAIT to high	R/W
31:17	—	These bits are read as 0. The write value should be 0.	R/W

Note 1. CPUWAIT is used to prevent the processor from executing code immediately after reset.
Note 2. Access (R/W) to bit is valid only when Debug Level is DBG1 or DBG2.

2.6.5.3 JBMDR : SWD Boot Mode Entry Register

Base address: CPU_OCD = 0x8000_0000

Offset address: 0x1_1100

Bit position:	31	30	29	28	27	26	25	24	23	22	21	20	19	18	17	16
Bit field:	—	—	—	—	—	—	—	—	—	—	—	—	—	—	—	—
Value after reset:	0	0	0	0	0	0	0	0	0	0	0	0	0	0	0	0

Bit position:	15	14	13	12	11	10	9	8	7	6	5	4	3	2	1	0
Bit field:	—	—	—	—	—	—	—	—	KEY[7:0]							
Value after reset:	0	0	0	0	0	0	0	0	0	0	0	0	0	0	0	0

Bit	Symbol	Function	R/W
7:0	KEY[7:0]	Mode entry key Pin reset released after 0xA5 is set, then the system enters the SWD boot mode. MDSR.JBOTS = 1 when system transitions to SWD boot mode.	R/W
31:8	—	These bits are read as 0. The write value should be 0.	

The JBMDR register sets a command from the debugger.

This register is initialized by POR or debugger disconnection.

The MCU supports the SWD interface but does not support the JTAG interface.

2.6.5.4 JBRDR : SWD Boot Receive Data Register

Base address: CPU_OCD = 0x8000_0000

Offset address: 0x1_1120

Bit position:	31	30	29	28	27	26	25	24	23	22	21	20	19	18	17	16
Bit field:	RDAT[31:0]															
Value after reset:	0	0	0	0	0	0	0	0	0	0	0	0	0	0	0	0

Bit position:	15	14	13	12	11	10	9	8	7	6	5	4	3	2	1	0
Bit field:	RDAT[31:0]															
Value after reset:	0	0	0	0	0	0	0	0	0	0	0	0	0	0	0	0

Bit	Symbol	Function	R/W
31:0	RDAT[31:0]	Received data register R/W is possible for both the external host and CPU, but the following usage is recommended: W: External host R: CPU (boot firmware) When JBSTR.RDF = 1, write is not possible and an error occurs.	R/W

The JBRDR register is used for receiving data from the debugger.

This register is initialized by the system reset.

The MCU supports the SWD interface but does not support the JTAG interface.

2.6.5.5 JBTDR : SWD Boot Transmit Data Register

Base address: CPU_OCD = 0x8000_0000

Offset address: 0x1_1130

Bit position:	31	30	29	28	27	26	25	24	23	22	21	20	19	18	17	16
Bit field:	TDAT[31:0]															
Value after reset:	0	0	0	0	0	0	0	0	0	0	0	0	0	0	0	0

Bit position:	15	14	13	12	11	10	9	8	7	6	5	4	3	2	1	0
Bit field:	TDAT[31:0]															
Value after reset:	0	0	0	0	0	0	0	0	0	0	0	0	0	0	0	0

Bit	Symbol	Function	R/W
31:0	TDAT[31:0]	Transmitted data register R/W is possible for both the external host and CPU, but the following usage is recommended: W: CPU (boot firmware) R: External host When JBSTR.TDE = 1, read is not possible and an error occurs.	R/W

The JBTDR register is used for transmitting data to the debugger.

This register is initialized by the system reset.

The MCU supports the SWD interface but does not support the JTAG interface.

2.6.5.6 JBSTR : SWD Boot Status Register

Base address: CPU_OCD = 0x8000_0000

Offset address: 0x1_1140

Bit position:	31	30	29	28	27	26	25	24	23	22	21	20	19	18	17	16
Bit field:	—	—	—	—	—	—	—	—	—	—	—	—	—	—	—	—
Value after reset:	0	0	0	0	0	0	0	0	0	0	0	0	0	0	0	0

Bit position:	15	14	13	12	11	10	9	8	7	6	5	4	3	2	1	0
Bit field:	—	—	—	—	—	—	—	—	—	—	—	—	—	—	TDE	RDF
Value after reset:	0	0	0	0	0	0	0	0	0	0	0	0	0	0	1	0

Bit	Symbol	Function	R/W
0	RDF	Receive buffer full [Set conditions] ● Write access to JBRDR ● Write 1 to JBSTR.RDF [Clear conditions] ● Read access to JBRDR ● Write 0 to JBSTR.RDF 0: No receiving data 1: There is receiving data	R/W

Bit	Symbol	Function	R/W
1	TDE	Transmit data empty [Set conditions] ● Read access to JBTDR ● Write 1 to JBSTR.TDE [Clear conditions] ● Write access to JBTDR ● Write 0 to JBSTR.TDE 0: There is data transmission 1: No data transmission	R/W
31:2	—	These bits are read as 0. The write value should be 0.	R/W

The JBSTR register is used for monitoring booting status.

This register is initialized by system reset.

The MCU supports the SWD interface but does not support the JTAG interface.

2.6.5.7 JBICR : SWD Boot Interrupt Control Register

Base address: CPU_OCD = 0x8000_0000

Offset address: 0x1_1150

Bit position:	31	30	29	28	27	26	25	24	23	22	21	20	19	18	17	16
Bit field:	—	—	—	—	—	—	—	—	—	—	—	—	—	—	—	—
Value after reset:	0	0	0	0	0	0	0	0	0	0	0	0	0	0	0	0

Bit position:	15	14	13	12	11	10	9	8	7	6	5	4	3	2	1	0
Bit field:	—	—	—	—	—	—	—	—	—	—	—	—	—	—	—	RDFIE
Value after reset:	0	0	0	0	0	0	0	0	0	0	0	0	0	0	0	0

Bit	Symbol	Function	R/W
0	RDFIE	Receive buffer full interrupt enabled 0: Interrupt request disabled by RDF = 1 1: Enable interrupt request by RDF = 1	R/W
31:1	—	These bits are read as 0. The write value should be 0.	R/W

The JBICR register is used for controlling interrupt during SWD Boot.

This register is initialized by system reset.

The MCU supports the SWD interface but does not support the JTAG interface.

2.6.5.8 OCDREG CoreSight Component Registers

The OCDREG module provides the CoreSight component registers defined in the Arm CoreSight architecture.

Table 2.14 shows the registers. See reference 4. in section 2.13. References for details of each register.

Table 2.14 OCDREG CoreSight component registers (1 of 2)

Name	Address	Access size	R/W	Initial value
PIDR4	0x8000_0FD0	32 bits	R	0x00000004
PIDR5	0x8000_0FD4	32 bits	R	0x00000000
PIDR6	0x8000_0FD8	32 bits	R	0x00000000
PIDR7	0x8000_0FDC	32 bits	R	0x00000000
PIDR0	0x8000_0FE0	32 bits	R	0x00000004
PIDR1	0x8000_0FE4	32 bits	R	0x00000030

Table 2.14 OCDREG CoreSight component registers (2 of 2)

Name	Address	Access size	R/W	Initial value
PIDR2	0x8000_0FE8	32 bits	R	0x0000000A
PIDR3	0x8000_0FEC	32 bits	R	0x00000000
CIDR0	0x8000_0FF0	32 bits	R	0x0000000D
CIDR1	0x8000_0FF4	32 bits	R	0x000000F0
CIDR2	0x8000_0FF8	32 bits	R	0x00000005
CIDR3	0x8000_0FFC	32 bits	R	0x000000B1

2.6.6 CPUDSAR : CPU Debug Security Attribution Register

Base address: CPSCU = 0x4000_8000

Offset address: 0x1B0

Bit position:	31	30	29	28	27	26	25	24	23	22	21	20	19	18	17	16
Bit field:	—	—	—	—	—	—	—	—	—	—	—	—	—	—	—	—
Value after reset:	1	1	1	1	1	1	1	1	1	1	1	1	1	1	1	1

Bit position:	15	14	13	12	11	10	9	8	7	6	5	4	3	2	1	0
Bit field:	—	—	—	—	—	—	—	—	—	—	—	—	—	—	—	CPUDSA0
Value after reset:	1	1	1	1	1	1	1	1	1	1	1	1	1	1	1	0

Bit	Symbol	Function	R/W
0	CPUDSA0	CPU Debug Security Attribution 0 0: Secure 1: Non-secure	R/W
31:1	—	These bits are read as 1. The write value should be 1.	R/W

Note: Only secure access can write to this register. Both secure access and non-secure read access are allowed. Non-secure write access is denied, and no TrustZone access error is generated.

Note: This register is write-protected by PRCR register.

When Debug level of the MCU is DBG2, by guarding entire EPPB bus, the non-secure access from CPU to debug related components is completely controlled by the current value of the CPUDSA0 bit. Since this bit is modifiable only when CPU is in secure state, user must be aware of the CPUDSAR register before using CoreSight debug components.

CPUDSA0 bit (CPU Debug Security Attribution 0)

Security attributes of register for accessing the debug component of the CPU.

0: Debug component can only be accessed with secure access.

1: There is no restriction on accessing the debug component.

2.6.7 Processing on Error Response Generated by CPU Access

In addition to the specific-error detection specification of the Arm Cortex-M33 processor, this MCU also provides additional error information which is described in section 13, Buses.

This section describes how to handle the additional error information with no conflict to that of the Arm Cortex-M33 processor.

Table 2.15 shows error detection modules, which are also described in section 13, Buses. These error detection modules not only provide error information on the bus module, but also notify the processor to trigger the exception handler.

Table 2.15 Error detection modules

	NMI/RESET request	Interrupt	Bus error status register	Error address register Error RW register
Slave TZF	NMISR.TZFST	Bus Fault*1 (Hard Fault)	BUS.BUSnERRSTAT.STERRSTAT	BUS.BTZFnERRADD BUS.BTZFnERRRW
Slave bus error	—	Bus Fault*1 (Hard Fault)	BUS.BUSnERRSTAT.SLERRSTAT	BUS.BUSnERRADD BUS.BUSnERRRW
Illegal address access error	—	Bus Fault*1 (Hard Fault)	BUS.BUSnERRSTAT.ILERRSTAT	BUS.BUSnERRADD BUS.BUSnERRRW

Note 1. A Bus Fault can be treated as HardFault. For details, see *ARM® Cortex®-M33 Device Generic User Guide* in the section 2.13. References.

To prevent unexpected operation, when handling the exception, additional operation should be added into exception routing.

BusFault when occurred by error detected as shown in Table 2.15:

- See section 13, Buses for the error information in the corresponding register
- Clear the data in cache for the error address
- Clear the Error Status register in the bus module
- Service exception handling with Arm-guided operation

For a Bus Fault that is not detected in the Renesas-specific error detection module (occurred inside the Arm Cortex-M33 core), see the *ARM® Cortex®-M33 Device Generic User Guide* to handle this case.

In the system bus specification, there is a specific case for Slave TrustZone Filter, that is, if an error is selected to generate an NMI, then before the processor handles the Bus Fault exception, NMI with higher priority takes the exception first. Therefore, use the BusFault handler and not NMI handler to handle this error. In other words, the NMI status should be cleared but the error status bit should not be cleared to ensure that BusFault captures all the error information.

Figure 2.4 and Figure 2.5 show the recommended flows for NMI handler and BusFault handler for the errors described in Table 2.15.

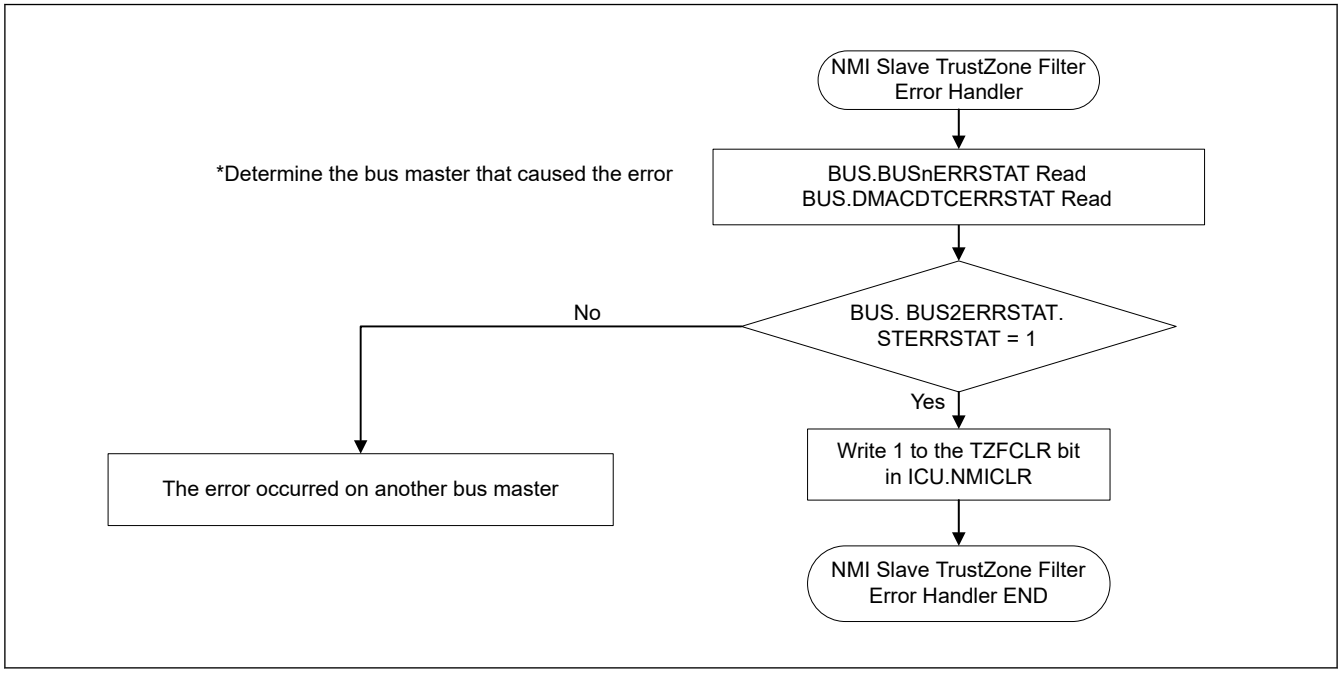

Figure 2.4 NMI handling flowchart

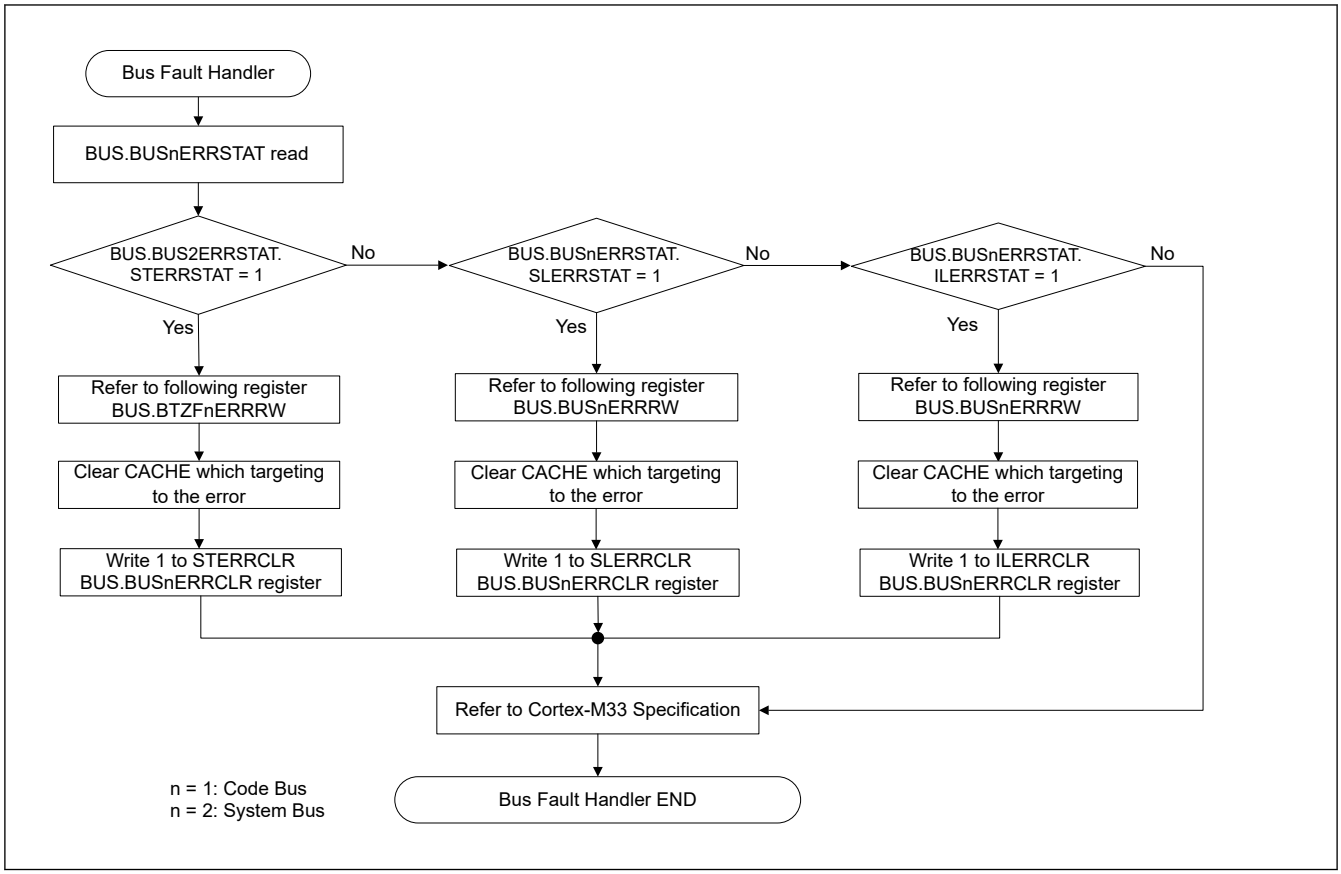

Figure 2.5 BusFault interrupt handling flowchart

2.7 CoreSight Cross Trigger Interface (CTI)

As shown in Figure 2.6, the input and output of a Cross Trigger Interface (CTI) interact with each other through four CTM channels. Input of a CTI can be used to trigger the output of another CTI using the four CTM channels.

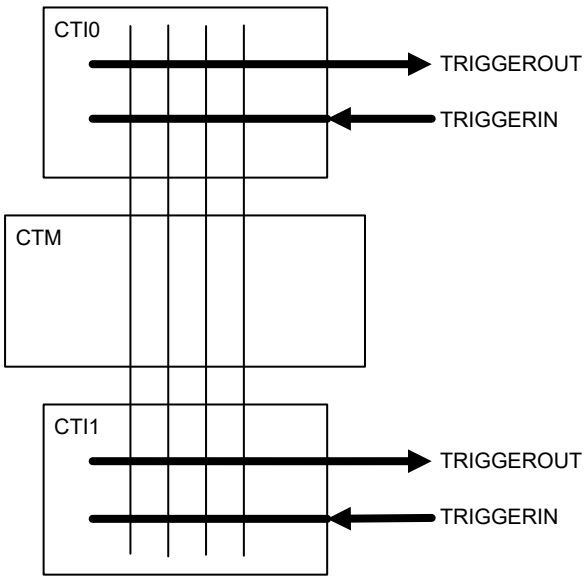

Figure 2.6 CTI System

Debug Interrupt Request (DBGIRQ) is controlled by MCUCTRL register in OCDREG module.

Table 2.16 CTI Trigger signals

Number of CTI channel	CTITRIGIN		CTITRIGOUT	
CTI0 (Debug common)	0	ACQCOMP	0	—
	1	FULL	1	—
	2	DBIRQ	2	ETB FLUSHIN
	3	—	3	ETB TRIGIN
	4	—	4	—
	5	—	5	—
	6	—	6	—
	7	—	7	—
CTI1 (CPU)	0	Processor Halted	0	Processor debug request
	1	DWT Comparator Output 0	1	Processor Restart
	2	DWT Comparator Output 1	2	CTIIRQ[0] (Connected to IRQ64)
	3	DWT Comparator Output 2	3	CTIIRQ[1] (Connected to IRQ65)
	4	ETM Event Output 0	4	ETM Event Input 0
	5	ETM Event Output 1	5	ETM Event Input 1
	6	—	6	ETM Event Input 2
	7	—	7	ETM Event Input 3

2.8 CoreSight ATB Funnel

There is one CoreSight ATB funnel in the MCU. The funnel has two ATB slaves and one ATB master, and it selects the debug trace source from ETM and ITM to ETB. Figure 2.7 shows the CoreSight ATB connection in the MCU.

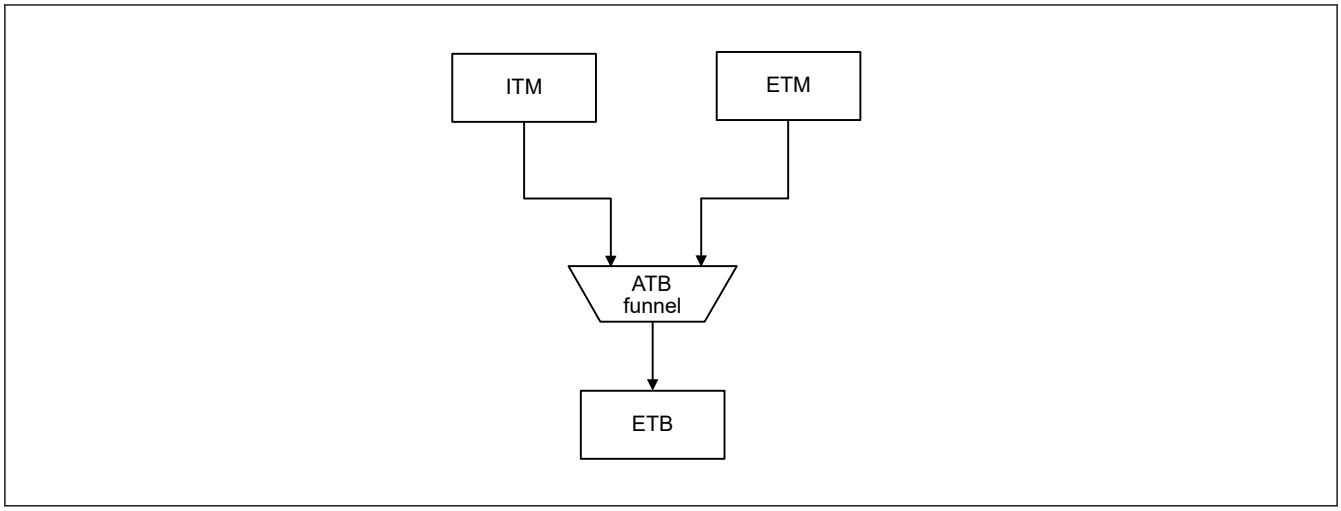

Figure 2.7 CoreSight ATB connection

Table 2.17 shows the ATB slave connection for the funnel.

Table 2.17 ATB slave connection

ATB slave number	Connected trace source
#0	ITM
#1	ETM

See reference 4. in section 2.13. References for details of the ATB and funnel.

2.9 Break Point Unit

The MCU has Break Point Unit. See Break Point Unit chapter of reference 1. in section 2.13. References for details about register description of this module.

2.10 CoreSight Time Stamp Generator

A CoreSight Time Stamp Generator provides a CPU clock-based timestamp to ITM and ETM. The timestamp is generated by a 64-bit counter. See reference 4. in section 2.13. References for details.

2.11 SysTick Timer

The MCU has SysTick timer that provides two 24-bit down counters, non-secure and secure counters. The timer can select SysTick timer clock (SYSTICCLK) or System clock (ICLK).

See section 8, Clock Generation Circuit and reference 1. in section 2.13. References for details.

Note: SysTick timer counter operation is enabled by signal synchronized with CPU clock. Therefore, the counter might not operate correctly if the CPU clock is slower than the SysTick timer clock. In other words, clock setting must satisfy the following: CPU clock ≥ SysTick timer clock (LOCO: 32.768 kHz).

2.12 OCD Emulator Connection

In this product, the MCU confirms the access permission for Non-secure debug and Non-secure chip resources by checking Debug level is DBG1 or higher. For full access permission for debug and chip resources, Secure debug level DBG2 is required.

Figure 2.8 shows a block diagram of SWD authentication mechanism.

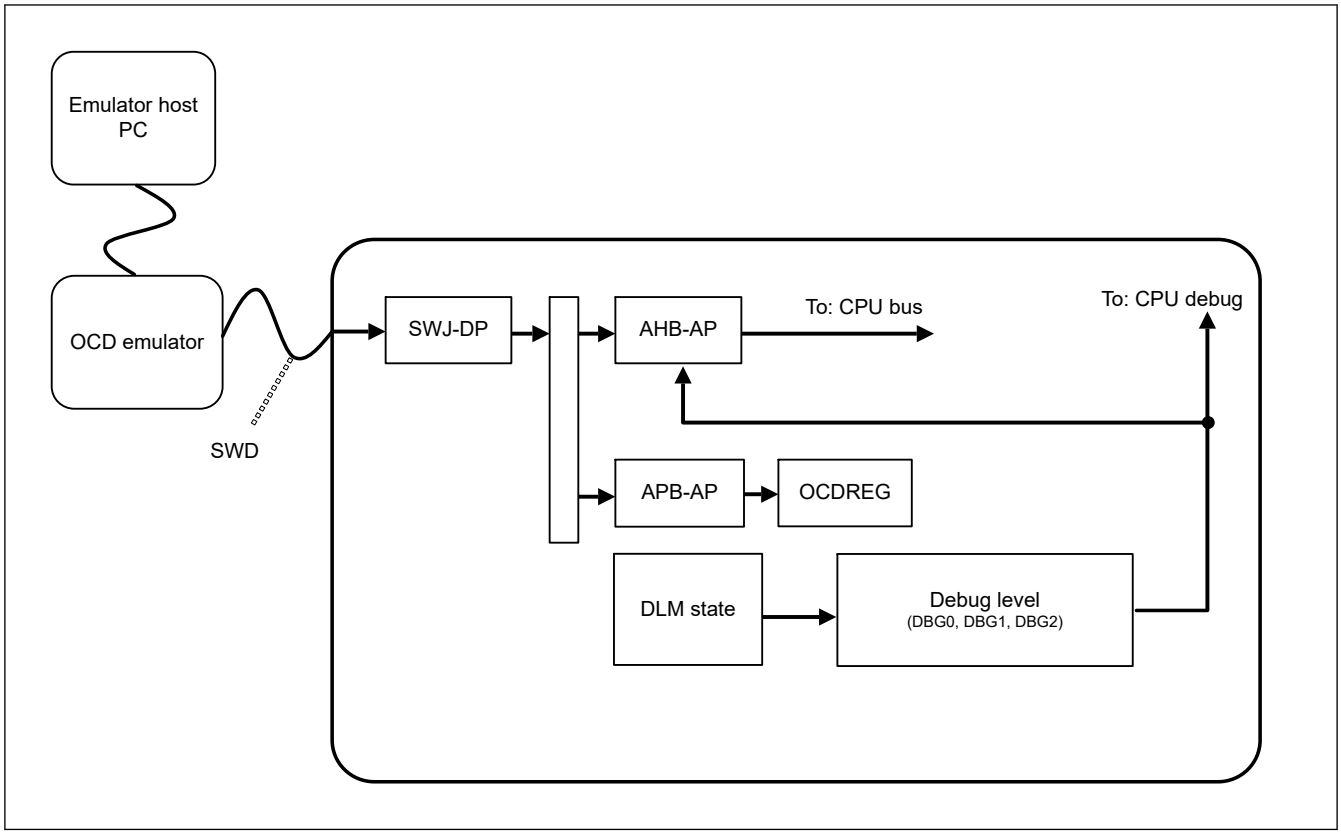

Figure 2.8 SWD Authentication mechanism block diagram

Three levels of debug capability are available, DBG0, DBG1, and DBG2, which correspond to the Device Level Management (DLM) states. When debug level is DBG0, access to debug components and system bus from OCD emulator is not permitted. When debug level is DBG1 or DBG2, the corresponding non-secure or secure debug components and system bus can be accessed from the OCD emulator. See Table 2.4 for more information about debug levels.

2.12.1 DBGEN

After the OCD emulator gets access permission, the OCD emulator must set the DBGEN bit in the System Control OCD Control Register (SYOCDCR). In addition, the OCD emulator must clear the DBGEN bit before disconnecting it. See section 10, Low Power Modes for details.

2.12.2 Restrictions on connecting an OCD emulator

This section describes the restrictions on emulator access.

2.12.2.1 Starting connection while in low power mode

When starting a SWD connection from an OCD emulator, the MCU must be in Normal or Sleep mode. If the MCU is in Software Standby or Snooze mode, the OCD emulator can cause the MCU to hang.

2.12.2.2 Changing low power mode while in OCD mode

When the MCU is in OCD mode, the low power mode can be changed. However, system bus access from AHB-AP is prohibited in Software Standby or Snooze mode. Only SWJ-DP, APB-AP, and OCDREG can be accessed from the OCD emulator in these modes. Table 2.18 shows the restrictions.

Table 2.18 Restrictions by mode (1 of 2)

Active mode	Start OCD emulator connection	Change low power mode	Access AHB-AP and system bus	Access APB-AP and OCDREG
Normal	Yes	Yes	Yes	Yes
Sleep	Yes	Yes	Yes	Yes

Table 2.18 Restrictions by mode (2 of 2)

Active mode	Start OCD emulator connection	Change low power mode	Access AHB-AP and system bus	Access APB-AP and OCDREG
Software Standby	No	Yes	No	Yes
Snooze	No	Yes	No	Yes

If system bus access is required in Software Standby or Snooze mode, set the MCUCTRL.DBIRQ bit in OCDREG to wake up the MCU from the low power modes. Simultaneously, by asserting the MCUCTRL.DBIRQ bit in OCDREG, the OCD emulator can wake up the MCU without starting CPU execution by using a CPU break.

2.12.2.3 Connecting sequence and SWD authentication

1. Connect the OCD debugger to the MCU through the SWD interface.
2. Set up SWJ-DP to access DAP bus.
   In the setup, the OCD emulator must assert CDBGPWRUPREQ in the SWJDP.
   Control Status Register, and then wait until CDBGPWRUPACK in the same register is asserted.
3. Set the APB-AP to access OCDREG. This APB-AP is connected to DAP bus port 1.
4. Set MCUCTRL.CPUWAIT = 1.
5. Confirm the debug capability of device by reading MCUSTAT:
   - If Debug function is prohibited, this device is not able to debug.
   - If Debug function is enabled and secure debug is not available, only non-secure debug is available.
   - If Debug function is enabled and secure debug is available, full debug functions are available.

   If Debug function is available, set debug-related register then clear MCUCTRL.CPUWAIT = 0.
6. Set up the AHB-AP to access the system address space. The AHB-AP is connected to DAP bus port 0.
7. Set SYOCDCR.DBGEN to 1.
8. Start accessing the CPU debug resources using the AHB-AP.

Note: Debug level is determined by the current DLM state of product.

2.13 References

1. *ARM®v8-M Architecture Reference Manual* (ARM DDI 0553B.a)
2. *ARM® Cortex®-M33 Processor Technical Reference Manual* (ARM 100230)
3. *ARM® Cortex®-M33 Device Generic User Guide* (ARM 100235)
4. *ARM® CoreSight™ SoC-400 Technical Reference Manual* (ARM DDI 0480G)
5. *ARM® CoreSight™ Architecture Specification* (ARM IHI 0029E)

3. Operating Modes

3.1 Overview

Table 3.1 shows the selection of operating modes by the mode-setting pin. For details, see section 3.2. Details of Operating Modes. Operation starts with the on-chip flash memory enabled, regardless of the mode in which operation started.

Table 3.1 Selection of operating modes by the mode-setting pin

Mode-setting pin (MD)	Operating mode	On-chip Flash
1	Single chip mode/SWD boot mode	Enable
0	SCI boot mode	Enable

3.2 Details of Operating Modes

3.2.1 Single-Chip Mode

In single-chip mode, all I/O pins are available for use as input or output port, inputs or outputs for peripheral functions, or as interrupt inputs.

When a reset is released while the MD pin is high, the MCU starts in single-chip mode and the on-chip flash is enabled.

3.2.2 SCI Boot Mode

In this mode, the on-chip flash memory programming routine (SCI boot program), stored in the boot area within the MCU, is used. The on-chip flash, including code flash memory and data flash memory, can be modified from outside the MCU by using a universal asynchronous receiver/transmitter (UART) SCI. For details, see section 39, Flash Memory. The MCU starts in SCI boot mode if the MD pin is held low on release from the reset state.

3.2.3 SWD Boot Mode

In this mode, the on-chip flash memory programming routine (SWD boot program), stored in the boot area within the MCU, is used. The on-chip flash, including code flash memory and data flash memory, can be modified from outside the MCU by using the SWD interface. For details, see section 39, Flash Memory. To enter this mode, it is necessary to input the request from the SWD-I/F during RES pin reset.

3.3 Operating Modes Transitions

3.3.1 Operating Mode Transitions as Determined by the Mode-Setting Pin

Figure 3.1 shows operating mode transitions determined by the MD pin settings.

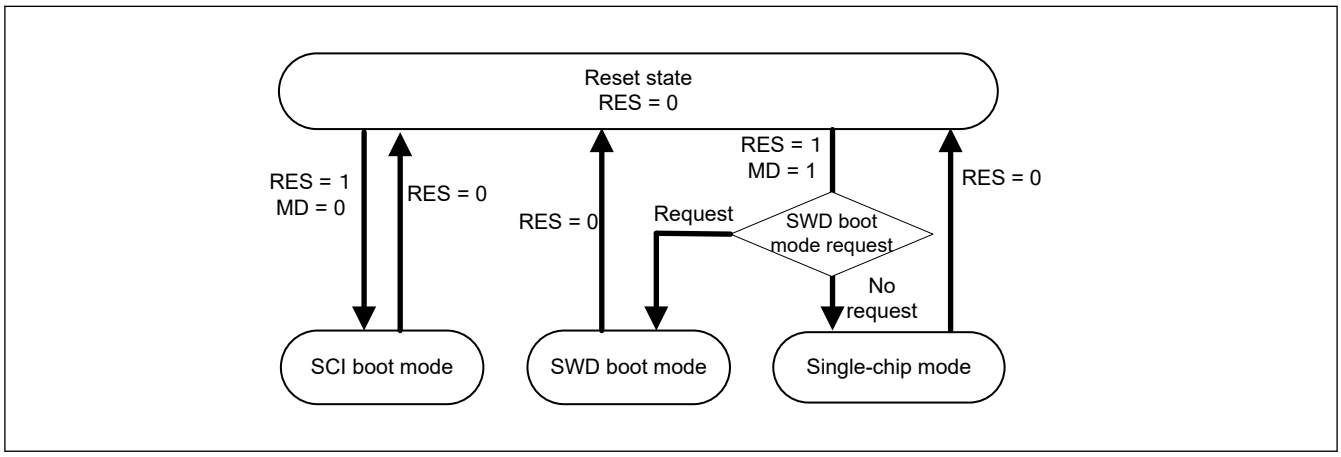

Figure 3.1 Mode-setting pin level and operating mode

4. Address Space

4.1 Address Space

The MCU supports a 4-GB linear address space ranging from 0x0000_0000 to 0xFFFF_FFFF that can contain both program and data. Figure 4.1 shows the memory map.

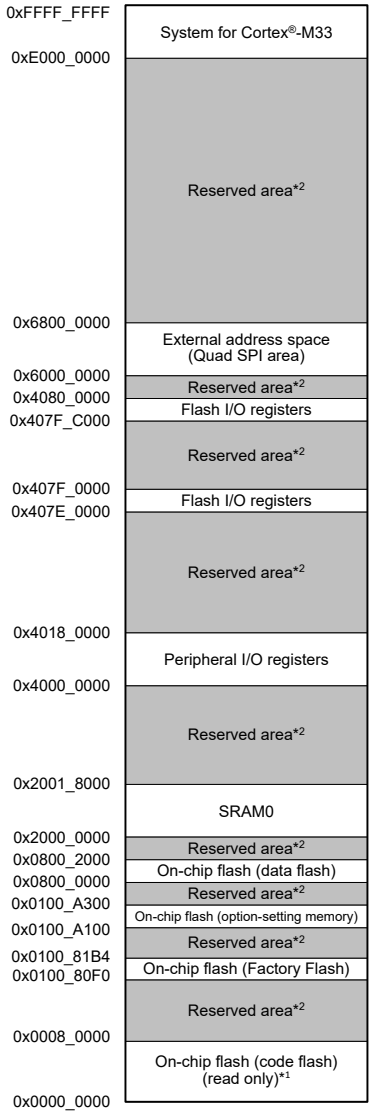

Note 1. See Table 4.1. The capacity of the flash differs depending on the product.
Note 2. Do not access reserved areas.

Figure 4.1 Memory map

Table 4.1 Capacity of the code flash memory, data flash memory, and SRAM0

Code flash memory		Data flash memory		SRAM0	
Capacity	**Address**	**Capacity**	**Address**	**Capacity**	**Address**
512 KB	0x0000_0000 - 0x0007_FFFF	8 KB	0x0800_0000 - 0x0800_1FFF	96 KB	0x2000_0000 - 0x2001_7FFF
256 KB	0x0000_0000 - 0x0003_FFFF				

5. Resets

5.1 Overview

The MCU provides 14 resets.

Table 5.1 lists the reset names and sources.

Table 5.1 Reset names and sources

Reset name	Source
RES pin reset	Voltage input to the RES pin is driven low
Power-on reset	VCC falls (voltage detection V_{POR})*1
VRTC domain power-on reset (VRTC_POR)	VRTC falls (voltage detection V_{VRTC_POR})*1
Independent watchdog timer reset	IWDT underflow or refresh error
Watchdog timer reset	WDT underflow or refresh error
Voltage monitor 0 reset	VCC falls (voltage detection V_{det0})*1
Voltage monitor 1 reset	VCC falls (voltage detection V_{det1})*1
Voltage monitor 2 reset	VCC or EXLVD fall (voltage detection V_{det2})*1
SRAM parity error reset	SRAM parity error detection
SRAM ECC error reset	SRAM ECC error detection
Bus master MPU error reset	Bus master MPU error detection
TrustZone error reset	TrustZone error detection
Cache Parity error reset	Cache Parity error detection
Software reset	Register setting (use the software reset bit AIRCR.SYSRESETREQ)

Note 1. For details on the voltages to be monitored (V_{POR}, V_{det0}, V_{det1}, V_{det2} and V_{VRTC_POR}), see section 7, Low Voltage Detection (LVD) and section 43, Electrical Characteristics.

The internal state and pins are initialized by a reset. Table 5.2 and Table 5.3 list the targets initialized by resets.

Table 5.2 Reset detect flags initialized by each reset source (1 of 2)

Flag to be initialized	Reset source													
	RES pin reset	Power-on reset	Voltage monitor 0 reset	Independent watchdog timer reset	Watchdog timer reset	Voltage monitor 1 reset	Voltage monitor 2 reset	Software reset	SRAM parity error reset	SRAM ECC error reset	Bus master MPU error reset	TrustZone reset error	Cache Parity error reset	VRTC domain power-on reset
Power-On Reset Detect Flag (RSTSR0.PORF)	✓	—	—	—	—	—	—	—	—	—	—	—	—	—
Voltage Monitor 0 Reset Detect Flag (RSTSR0.LVD0RF)	✓	✓	—	—	—	—	—	—	—	—	—	—	—	—
Independent Watchdog Timer Reset Detect Flag (RSTSR1.IWDTRF)	✓	✓	✓	—	—	—	—	—	—	—	—	—	—	—
Watchdog Timer Reset Detect Flag (RSTSR1.WDTRF)	✓	✓	✓	—	—	—	—	—	—	—	—	—	—	—

Table 5.2 Reset detect flags initialized by each reset source (2 of 2)

Flag to be initialized	Reset source													
	RES pin reset	Power-on reset	Voltage monitor 0 reset	Independent watchdog timer reset	Watchdog timer reset	Voltage monitor 1 reset	Voltage monitor 2 reset	Software reset	SRAM parity error reset	SRAM ECC error reset	Bus master MPU error reset	TrustZone reset error	Cache Parity error reset	VRTC domain power-on reset
Voltage Monitor 1 Reset Detect Flag (RSTSR0.LVD1RF)	✓	✓	✓	—	—	—	—	—	—	—	—	—	—	—
Voltage Monitor 2 Reset Detect Flag (RSTSR0.LVD2RF)	✓	✓	✓	—	—	—	—	—	—	—	—	—	—	—
Software Reset Detect Flag (RSTSR1.SWRF)	✓	✓	✓	—	—	—	—	—	—	—	—	—	—	—
SRAM Parity Error Reset Detect Flag (RSTSR1.RPERF)	✓	✓	✓	—	—	—	—	—	—	—	—	—	—	—
SRAM ECC Error Reset Detect Flag (RSTSR1.REERF)	✓	✓	✓	—	—	—	—	—	—	—	—	—	—	—
Bus Master MPU Error Reset Detect Flag (RSTSR1.BUSMRF)	✓	✓	✓	—	—	—	—	—	—	—	—	—	—	—
TrustZone Error Reset Detect Flag (RSTSR1.TZERF)	✓	✓	✓	—	—	—	—	—	—	—	—	—	—	—
Cache Parity Reset Detect Flag (RSTSR1.CPERF)	✓	✓	✓	—	—	—	—	—	—	—	—	—	—	—
Cold Start/ Warm Start Determination Flag (RSTSR2.CWSF)	—	✓	—	—	—	—	—	—	—	—	—	—	—	—
VRTC-domain Power-On Reset Detect Flag (VRTSR.PORDET)	—	—	—	—	—	—	—	—	—	—	—	—	—	—

Note: ✓ : Initialized to 0
— : Not initialized

Table 5.3 Module-related registers initialized by each reset source (1 of 5)

Registers to be initialized		Reset source							
		RES pin reset	Power-on reset	Voltage monitor 0 reset	Independent watchdog timer reset	Watchdog timer reset	Voltage monitor 1 reset	Voltage monitor 2 reset	Software reset
Independent watchdog timer registers	IWDTRR, IWDTSR	✓	✓	✓	✓	✓	✓	✓	✓

Table 5.3 Module-related registers initialized by each reset source (2 of 5)

Registers to be initialized		Reset source							
		RES pin reset	Power-on reset	Voltage monitor 0 reset	Independent watchdog timer reset	Watchdog timer reset	Voltage monitor 1 reset	Voltage monitor 2 reset	Software reset
Watchdog timer registers	WDTRR, WDTCR, WDTSR, WDTRCR, WDTCSTPR	✓	✓	✓	✓	✓	✓	✓	✓
Voltage monitor function 1 registers	LVD1CR0,LVD1CMPCR	✓	✓	✓	✓	✓	—	—	—
	LVD1CR1/LVD1SR	✓	✓	✓	✓	✓	—	—	—
Voltage monitor function 2 registers	LVD2CR0, LVD2CMPCR	✓	✓	✓	✓	✓	—	—	—
	LVD2CR1/LVD2SR	✓	✓	✓	✓	✓	—	—	—
SOSC registers	SOSCCR	—	—	—	—	—	—	—	—
	SOMCR	—	—	—	—	—	—	—	—
	SOMRG	—	—	—	—	—	—	—	—
LOCO registers	LOCOCR	✓	✓	✓	✓	✓	✓	✓	✓
	LOCOUTCR	—	✓	✓	—	—	✓	✓	—
MOSC register	MOMCR	✓	✓	✓	✓	✓	✓	✓	✓
Realtime Clock (RTC) registers[*1]	RSR.AF	✓	✓	✓	✓	✓	✓	✓	✓
	RSR.CF								
	RSR.PF								
	RCR1.CIE								
	RCR1.RTCOS								
	RCR2.RESET								
	RCR2.ADJ30								
	RCR2.RTCOE								
	RCR4.RTCOHP								
	Other than above	—	—	—	—	—	—	—	—
AGTn registers (n = 0 to 1)		—	✓	✓	—	—	✓	✓	—
Bus, MPU and TrustZone error registers[*2]	BUSnERRADD (n = 1 to 3) BUSnERRRW (n = 1 to 3) BTZFnERRADD (n = 1 to 3) BTZFnERRRW (n = 1 to 3) BUSnERRSTAT (n = 1 to 3) DMACDTCERRSTAT BUSnERRCLR (n = 1 to 3) DMACDTCERRCLR	✓	✓	✓	✓	✓	✓	✓	✓
Pin states (except XCIN/XCOUT pin)		✓	✓	✓	✓	✓	✓	✓	✓
Pin states (XCIN/XCOUT pin)		—	—	—	—	—	—	—	—
Low-power function registers	SYOCDCR	—	✓	—	—	—	—	—	—

Table 5.3 Module-related registers initialized by each reset source (3 of 5)

Registers to be initialized		Reset source							
		RES pin reset	Power-on reset	Voltage monitor 0 reset	Independent watchdog timer reset	Watchdog timer reset	Voltage monitor 1 reset	Voltage monitor 2 reset	Software reset
Security Attribute Registers	CPUDSAR, RSTSAR, LVDSAR, CGFSAR, LPMSAR, ICUSARx, BUSSARA, BUSSARB, MMPUSARA, MMPUSARB, DMACSAR, DTCSAR, ELCSARA, ELCSARB, ELCSARC, PmSAR, SRAMSAR, FSAR, PSARB, PSARC, PSARD, PSARE, MSSAR, TZFSAR	✓*3	✓	✓*3	✓*3	✓*3	✓*3	✓*3	✓*3
Registers other than those shown, CPU, and internal state		✓	✓	✓	✓	✓	✓	✓	✓

Table 5.3 Module-related registers initialized by each reset source (4 of 5)

Registers to be initialized		Reset source					
		SRAM parity error reset	SRAM ECC error reset	Bus master MPU error reset	TrustZone error reset	Cache Parity error reset	VRTC domain power-on reset
Independent watchdog timer registers	IWDTRR, IWDTSR	✓	✓	✓	✓	✓	—
Watchdog timer registers	WDTRR, WDTCR, WDTSR, WDTRCR, WDTCSTPR	✓	✓	✓	✓	✓	—
Voltage monitor function 1 registers	LVD1CR0,LVD1CMP CR	—	—	—	—	—	—
	LVD1CR1/LVD1SR	—	—	—	—	—	—
Voltage monitor function 2 registers	LVD2CR0, LVD2CMPCR	—	—	—	—	—	—
	LVD2CR1/LVD2SR	—	—	—	—	—	—
SOSC registers	SOSCCR	—	—	—	—	—	✓
	SOMCR	—	—	—	—	—	✓
	SOMRG	—	—	—	—	—	✓
LOCO registers	LOCOCR	✓	✓	✓	✓	✓	—
	LOCOUTCR	—	—	—	—	—	—
MOSC register	MOMCR	✓	✓	✓	✓	✓	—

Table 5.3 Module-related registers initialized by each reset source (5 of 5)

Registers to be initialized		Reset source					
		SRAM parity error reset	SRAM ECC error reset	Bus master MPU error reset	TrustZone error reset	Cache Parity error reset	VRTC domain power-on reset
Realtime Clock (RTC) registers*1	RSR.AF	✓	✓	✓	✓	✓	—
	RSR.CF						
	RSR.PF						
	RCR1.CIE						
	RCR1.RTCOS						
	RCR2.RESET						
	RCR2.ADJ30						
	RCR2.RTCOE						
	RCR4.RTCOHP						
	Other than above	—	—	—	—	—	—
AGTn registers (n = 0 to 1)		—	—	—	—	—	—
Bus, MPU and TrustZone error registers*2	BUSnERRADD (n = 1 to 3) BUSnERRRW (n = 1 to 3) BTZFnERRADD (n = 1 to 3) BTZFnERRRW (n = 1 to 3) BUSnERRSTAT (n = 1 to 3) DMACDTCERRSTAT BUSnERRCLR (n = 1 to 3) DMACDTCERRCLR	✓	✓	—	—	—	—
Pin states (except XCIN/XCOUT pin)		✓	✓	✓	✓	✓	—
Pin states (XCIN/XCOUT pin)		—	—	—	—	—	✓
Low-power function registers	SYOCDCR	—	—	—	—	—	—
Security Attribute Registers	CPUDSAR, RSTSAR, LVDSAR, CGFSAR, LPMSAR, ICUSARx, BUSSARA, BUSSARB, MMPUSARA, MMPUSARB, DMACSAR, DTCSAR, ELCSARA, ELCSARB, ELCSARC, PmSAR, SRAMSAR, FSAR, PSARB, PSARC, PSARD, PSARE, MSSAR, TZFSAR	✓*3	✓*3	✓*3	✓*3	✓*3	—
Registers other than those shown, CPU, and internal state		✓	✓	✓	✓	✓	—

Note: ✓ : Initialized
— : Not initialized

Note 1. The RTC has a software reset. Some control bits are not initialized by all types of resets. For details on the target bits, see section 22, Realtime Clock (RTC).

Note 2. Some control bits are not initialized by all types of resets. For details on the target bits, see section 13, Buses

Note 3. Reset does not occur while the debugger is connected (DBGSTR.CDBGPWRUPREQ = 1) even if On-chip debugger is disabled (SYOCDCR.DBGEN = 0).

The RTC is not initialized by any reset source. SOSC and External sub-clock input can be selected as the clock sources of the RTC.

Table 5.4 shows the states of SOSC and External sub-clock input when a reset occurs. Table 5.5 shows the states of LOCO when a reset occurs.

Table 5.4 States of SOSC when a reset occurs

		Reset source	
		VRTC_POR	**Other**
SOSC	Enable or disable	Initialized to disable	Continue with the state that was selected before the reset occurred
	Drive capability	Initialized to Nomal Mode	Continue with the state that was selected before the reset occurred
	XCIN/XCOUT	Initialized to Port Mode	Continue with the state that was selected before the reset occurred
External sub-clock	Enable or disable	Initialized to disable	Continue with the state that was selected before the reset occurred
	External sub-clock input	Initialized to Port Mode	Continue with the state that was selected before the reset occurred

Table 5.5 States of LOCO when a reset occurs

		Reset source		
		POR, LVD0, LVD1, LVD2	**VRTC_POR**	**Other**
LOCO	Enable or disable	Initialized to enable	Continue with the state that was selected before the reset occurred	Initialized to enable
	Oscillation accuracy	Initialized to accuracy before trimming by power-on (accuracy: ± 10%)	Continue with the accuracy that was trimmed by LOCOUTCR	

When a reset is released, reset exception handling starts.

Table 5.6 lists the pin related to the reset function.

Table 5.6 Pin related to reset

Pin name	I/O	Function
RES	Input	Reset pin

5.2 Register Descriptions

5.2.1 RSTSAR : Reset Security Attribution Register

Base address: SYSC = 0x4001_E000

Offset address: 0x3C4

Bit position:	31	30	29	28	27	26	25	24	23	22	21	20	19	18	17	16
Bit field:	—	—	—	—	—	—	—	—	—	—	—	—	—	—	—	—
Value after reset:	1	1	1	1	1	1	1	1	1	1	1	1	1	1	1	1

Bit position:	15	14	13	12	11	10	9	8	7	6	5	4	3	2	1	0
Bit field:	—	—	—	—	—	—	—	—	—	—	—	—	—	NONSEC2	NONSEC1	NONSEC0
Value after reset:	1	1	1	1	1	1	1	1	1	1	1	1	1	1	1	1

Bit	Symbol	Function	R/W
0	NONSEC0	Non-secure Attribute bit 0 Target register: Reset Status Register 0 0: Secure 1: Non-secure	R/W
1	NONSEC1	Non-secure Attribute bit 1 Target register: Reset Status Register 1 0: Secure 1: Non-secure	R/W
2	NONSEC2	Non-secure Attribute bit 2 Target register: Reset Status Register 2 0: Secure 1: Non-secure	R/W
31:3	—	These bits are read as 1. The write value should be 1.	R/W

Note: Only Secure access can write to this register. Both Secure access and Non-secure read access are allowed but Non-secure write access is not allowed and TrustZone access error is not generated.
Note: This register is write-protected by PRCR register.

NONSEC0 bit (Non-secure Attribute bit 0)

This bit controls the security attribute of RSTSR0.

NONSEC1 bit (Non-secure Attribute bit 1)

This bit controls the security attribute of RSTSR1.

NONSEC2 bit (Non-secure Attribute bit 2)

This bit controls the security attribute of RSTSR2.

5.2.2 RSTSR0 : Reset Status Register 0

Base address: SYSC = 0x4001_E000

Offset address: 0x410

Bit position:	7	6	5	4	3	2	1	0
Bit field:	—	—	—	—	LVD2RF	LVD1RF	LVD0RF	PORF
Value after reset:	0	0	0	0	x*1	x*1	x*1	x*1

Bit	Symbol	Function	R/W
0	PORF	Power-On Reset Detect Flag 0: Power-on reset not detected 1: Power-on reset detected	R/W*2
1	LVD0RF	Voltage Monitor 0 Reset Detect Flag 0: Voltage monitor 0 reset not detected 1: Voltage monitor 0 reset detected	R/W*2
2	LVD1RF	Voltage Monitor 1 Reset Detect Flag 0: Voltage monitor 1 reset not detected 1: Voltage monitor 1 reset detected	R/W*2
3	LVD2RF	Voltage Monitor 2 Reset Detect Flag 0: Voltage monitor 2 reset not detected 1: Voltage monitor 2 reset detected	R/W*2
7:4	—	These bits are read as 0. The write value should be 0.	R/W

Note: If the security attribution is configured as Secure:
- Secure access and Non-secure read access are allowed
- Non-secure write access is ignored, and TrustZone access error is not generated.

If the security attribution is configured as Non-secure:
- Secure and Non-secure access are allowed.

Note 1. The value after reset depends on the reset source.

Note 2. The register is cleared when a reset source listed in Table 5.2 occurs or when 0 is written to clear a flag. Bits other than the flag that is cleared should be set to 1.

PORF flag (Power-On Reset Detect Flag)

The PORF flag indicates that a power-on reset occurred.

[Setting condition]

- When a power-on reset occurs.

[Clearing conditions]

- When a reset listed in Table 5.2 occurs
- When PORF is read as 1 and then 0 is written to PORF

LVD0RF flag (Voltage Monitor 0 Reset Detect Flag)

The LVD0RF flag indicates that the VCC voltage fell below V_{det0}.

[Setting condition]

- When a voltage monitor 0 reset occurs.

[Clearing conditions]

- When a reset listed in Table 5.2 occurs
- When LVD0RF is read as 1 and then 0 is written to LVD0RF.

LVD1RF flag (Voltage Monitor 1 Reset Detect Flag)

The LVD1RF flag indicates that the VCC voltage fell below V_{det1}.

[Setting condition]

- When a voltage monitor 1 reset occurs.

[Clearing conditions]

- When a reset listed in Table 5.2 occurs
- When LVD1RF is read as 1 and then 0 is written to LVD1RF

LVD2RF flag (Voltage Monitor 2 Reset Detect Flag)

The LVD2RF flag indicates that the VCC or EXLVD voltage fell below V_{det2}.

[Setting condition]

- When a voltage monitor 2 reset occurs.

[Clearing conditions]

- When a reset listed in Table 5.2 occurs
- When LVD2RF is read as 1 and then 0 is written to LVD2RF

5.2.3 RSTSR1 : Reset Status Register 1

Base address: SYSC = 0x4001_E000

Offset address: 0x0C0

Bit position:	15	14	13	12	11	10	9	8	7	6	5	4	3	2	1	0
Bit field:	CPERF	—	TZERF	—	BUSMRF	—	REERF	RPERF	—	—	—	—	—	SWRF	WDTRF	IWDTRF
Value after reset:	x*1	0	x*1	0	x*1	0	x*1	x*1	0	0	0	0	0	x*1	x*1	x*1

Bit	Symbol	Function	R/W
0	IWDTRF	Independent Watchdog Timer Reset Detect Flag 0: Independent watchdog timer reset not detected 1: Independent watchdog timer reset detected	R/W*2
1	WDTRF	Watchdog Timer Reset Detect Flag 0: Watchdog timer reset not detected 1: Watchdog timer reset detected	R/W*2
2	SWRF	Software Reset Detect Flag 0: Software reset not detected 1: Software reset detected	R/W*2
7:3	—	These bits are read as 0. The write value should be 0.	R/W
8	RPERF	SRAM Parity Error Reset Detect Flag 0: SRAM parity error reset not detected 1: SRAM parity error reset detected	R/W*2
9	REERF	SRAM ECC Error Reset Detect Flag 0: SRAM ECC error reset not detected 1: SRAM ECC error reset detected	R/W*2
10	—	This bit is read as 0. The write value should be 0.	R/W
11	BUSMRF	Bus Master MPU Error Reset Detect Flag 0: Bus master MPU error reset not detected 1: Bus master MPU error reset detected	R/W*2
12	—	This bit is read as 0. The write value should be 0.	R/W
13	TZERF	TrustZone Error Reset Detect Flag 0: TrustZone error reset not detected 1: TrustZone error reset detected	R/W*2
14	—	This bit is read as 0. The write value should be 0.	R/W
15	CPERF	Cache Parity Error Reset Detect Flag 0: Cache Parity error reset not detected 1: Cache Parity error reset detected	R/W*2

Note: If the security attribution is configured as Secure:
- Secure access and Non-secure read access are allowed
- Non-secure write access is ignored, and TrustZone access error is not generated.

If the security attribution is configured as Non-secure:
- Secure and Non-secure access are allowed.

Note 1. The value after reset depends on the reset source.
Note 2. Only 0 can be written to clear the flag. The flag must be cleared by writing 0 after 1 is read.

IWDTRF flag (Independent Watchdog Timer Reset Detect Flag)

The IWDTRF flag indicates that an independent watchdog timer reset occurs.

[Setting condition]

- When an independent watchdog timer reset occurs.

[Clearing conditions]

- When a reset listed in Table 5.2 occurs
- When 1 is read and then 0 is written to IWDTRF.

WDTRF flag (Watchdog Timer Reset Detect Flag)

The WDTRF flag indicates that a watchdog timer reset occurs.

[Setting condition]

- When a watchdog timer reset occurs.

[Clearing conditions]

- When a reset listed in Table 5.2 occurs
- When 1 is read and then 0 is written WDTRF.

SWRF flag (Software Reset Detect Flag)

The SWRF flag indicates that a software reset occurs.

[Setting condition]

- When a software reset occurs.

[Clearing conditions]

- When a reset listed in Table 5.2 occurs
- When 1 is read and then 0 is written to SWRF.

RPERF flag (SRAM Parity Error Reset Detect Flag)

The RPERF flag indicates that an SRAM parity error reset occurs.

[Setting condition]

- When an SRAM parity error reset occurs.

[Clearing conditions]

- When a reset listed in Table 5.2 occurs
- When 1 is read as 1 and then 0 is written to RPERF.

REERF flag (SRAM ECC Error Reset Detect Flag)

The REERF flag indicates that an SRAM ECC error reset occurs.

[Setting condition]

- When an SRAM ECC error reset occurs.

[Clearing conditions]

- When a reset listed in Table 5.2 occurs
- When 1 is read as 1 and then 0 is written to REERF.

BUSMRF flag (Bus Master MPU Error Reset Detect Flag)

The BUSMRF flag indicates that a bus master MPU error reset occurs.

[Setting condition]

- When a bus master MPU error reset occurs.

[Clearing conditions]

- When a reset listed in Table 5.2 occurs
- When 1 is read and then 0 is written to BUSMRF.

TZERF flag (TrustZone Error Reset Detect Flag)

The TZERF flag indicates that a TrustZone error reset has occurred.

[Setting condition]

- When a TrustZone error reset occurs.

[Clearing conditions]

- When a reset listed in Table 5.2 occurs
- When 1 is read then and 0 is written to TZERF.

CPERF flag (Cache Parity Error Reset Detect Flag)

The CPERF flag indicates that a Cache Parity error reset has occurred.

[Setting condition]

- When a Cache Parity error reset occurs.

[Clearing conditions]

- When a reset listed in Table 5.2 occurs.
- When CPERF is read as 1 and then 0 is written to CPERF.

5.2.4 RSTSR2 : Reset Status Register 2

Base address: SYSC = 0x4001_E000

Offset address: 0x411

Bit position:	7	6	5	4	3	2	1	0
Bit field:	—	—	—	—	—	—	—	CWSF
Value after reset:	0	0	0	0	0	0	0	x*1

Bit	Symbol	Function	R/W
0	CWSF	Cold/Warm Start Determination Flag 0: Cold start 1: Warm start	R/W*2
7:1	—	These bits are read as 0. The write value should be 0.	R/W

Note: If the security attribution is configured as Secure:
- Secure access and Non-secure read access are allowed
- Non-secure write access is ignored, and TrustZone access error is not generated.

If the security attribution is configured as Non-secure:
- Secure and Non-secure access are allowed.

Note 1. The value after reset depends on the reset source.
Note 2. Only 1 can be written to set the flag.

RSTSR2 determines whether a power-on reset caused the reset processing (cold start) or a reset signal input during operation caused the reset processing (warm start).

CWSF flag (Cold/Warm Start Determination Flag)

The CWSF flag indicates the type of reset processing, either cold start or warm start. The determines whether a power-on reset caused the reset processing (cold start) or a reset signal input during operation caused the reset processing (warm start). CWSF flag is initialized by a power-on reset. It is not initialized by a reset signal generated by the RES pin.

[Setting condition]

- When 1 is written by software.

[Clearing condition]

- When a reset listed in Table 5.2 occurs.

5.3 Operation

5.3.1 RES Pin Reset

The RES pin generates this reset. When the RES pin is driven low, all the processing in progress is aborted and the MCU enters a reset state. To successfully reset the MCU, the RES pin must be held low for the power supply stabilization time specified at power-on.

When the RES pin is driven high from low, the internal reset is canceled after the post-RES cancellation wait time (t_{RESWT}) elapses. The CPU then starts the reset exception handling.

For details, see section 43, Electrical Characteristics.

5.3.2 Power-On Reset

The power-on reset (POR) is an internal reset generated by the power-on reset circuit. A power-on reset is generated under the following conditions.

1. If the RES pin is in a high level state when power is supplied

2. If the RES pin is in a high level state when VCC is below V_{POR}

After VCC exceeds V_{POR} and the specified power-on reset time (t_{POR}) elapses, the CPU starts the reset exception handling. The power-on reset time is a stabilization period of the external power supply and the MCU circuit.

After a power-on reset is generated, the PORF flag in the RSTSR0 is set to 1. The PORF flag is initialized by the RES pin reset. When VCC falls below V_{POR}, a power-on reset state is occurred.

Figure 5.1 shows example of operations during a power-on reset.

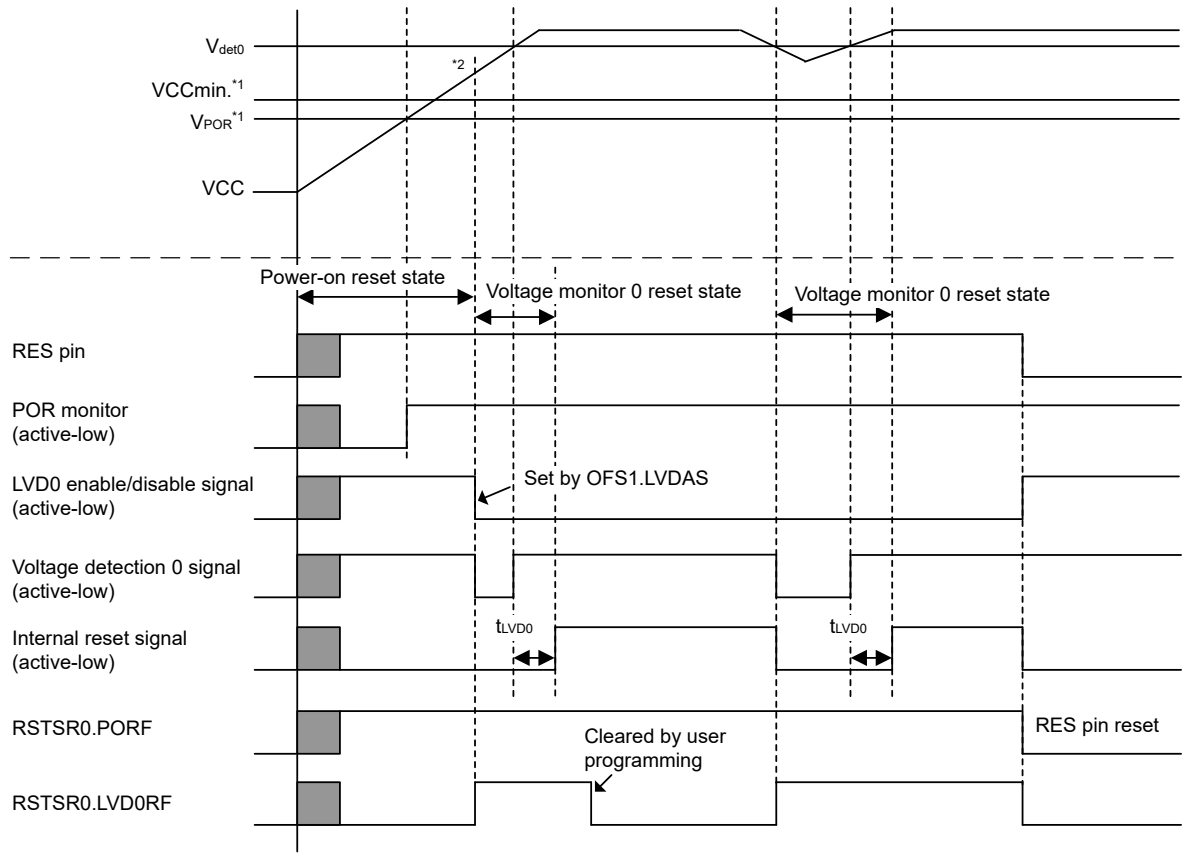

Note: For details on the electrical characteristics, see section 43, Electrical Characteristics.
Note 1. V_{POR} shows a power-on reset detection level, and VCCmin shows the minimum guaranteed voltage of MCU.
Note 2. At power-on, VCC should rise to the minimum guaranteed voltage before the power-on reset is released.

Figure 5.1 Example of operations during a power-on reset

5.3.3 Voltage Monitor Reset

The voltage monitor i (i = 0, 1, 2) reset is an internal reset generated by the voltage monitor i circuit. If the Voltage Detection 0 Circuit Start (LVDAS) bit in the Option Function Select Register 1 (OFS1) is 0 (voltage monitor 0 reset is enabled after a reset) and VCC falls below V_{det0}, the RSTSR0.LVD0RF flag becomes 1 and the voltage detection circuit generates voltage monitor 0 reset. Clear the OFS1.LVDAS bit to 0 if the voltage monitor 0 reset is to be used. After VCC exceeds V_{det0} and the voltage monitor 0 reset time (t_{LVD0}) elapses, the internal reset is canceled and the CPU starts the reset exception handling.

When the Voltage Monitor 1 Interrupt/Reset Enable bit (RIE) is set to 1 (enabling generation of a reset or interrupt by the voltage detection circuit) and the Voltage Monitor 1 Circuit Mode Select bit (RI) is set to 1 (selecting generation of a reset in response to detection of a low voltage) in Voltage Monitor 1 Circuit Control Register 0 (LVD1CR0), the RSTSR0.LVD1RF flag is set to 1 and the voltage detection circuit generates a voltage monitor 1 reset if VCC falls to or below V_{det1}.

Likewise, when the Voltage Monitor 2 Interrupt/Reset Enable bit (RIE) is set to 1 (enabling generation of a reset or interrupt by the voltage detection circuit) and the Voltage Monitor 2 Circuit Mode Select bit (RI) is set to 1 (selecting generation of a reset in response to detection of a low voltage) in Voltage Monitor 2 Circuit Control Register 0 (LVD2CR0), the RSTSR0.LVD2RF flag is set to 1 and the voltage detection circuit generates a voltage monitor 2 reset if VCC or EXLVD falls to or below V_{det2}.

Similarly, timing for release from the voltage monitor 1 reset state is selectable with the Voltage Monitor 1 Reset Negate Select bit (RN) in the LVD1CR0. When the LVD1CR0.RN bit is 0 and VCC falls to or below V_{det1}, the CPU is released from the internal reset state and starts reset exception handling when the LVD1 reset time (t_{LVD1}) elapses after VCC rises above V_{det1}. When the LVD1CR0.RN bit is 1 and VCC falls to or below V_{det1}, the CPU is released from the internal reset state and starts reset exception handling when the LVD1 reset time (t_{LVD1}) elapses.

Likewise, timing for release from the voltage monitor 2 reset state is selectable by setting the Voltage Monitor 2 Reset Negate Select bit (RN) in the LDV2CR0 register.

Detection levels V_{det1} and V_{det2} can be changed in the Voltage Monitoring Comparator Control Register (LVD1CMPCR/LVD2CMPCR).

Figure 5.2 shows example of operations during voltage monitor 1 and 2 resets. For details on the voltage monitor 1 reset and voltage monitor 2 reset, see section 7, Low Voltage Detection (LVD).

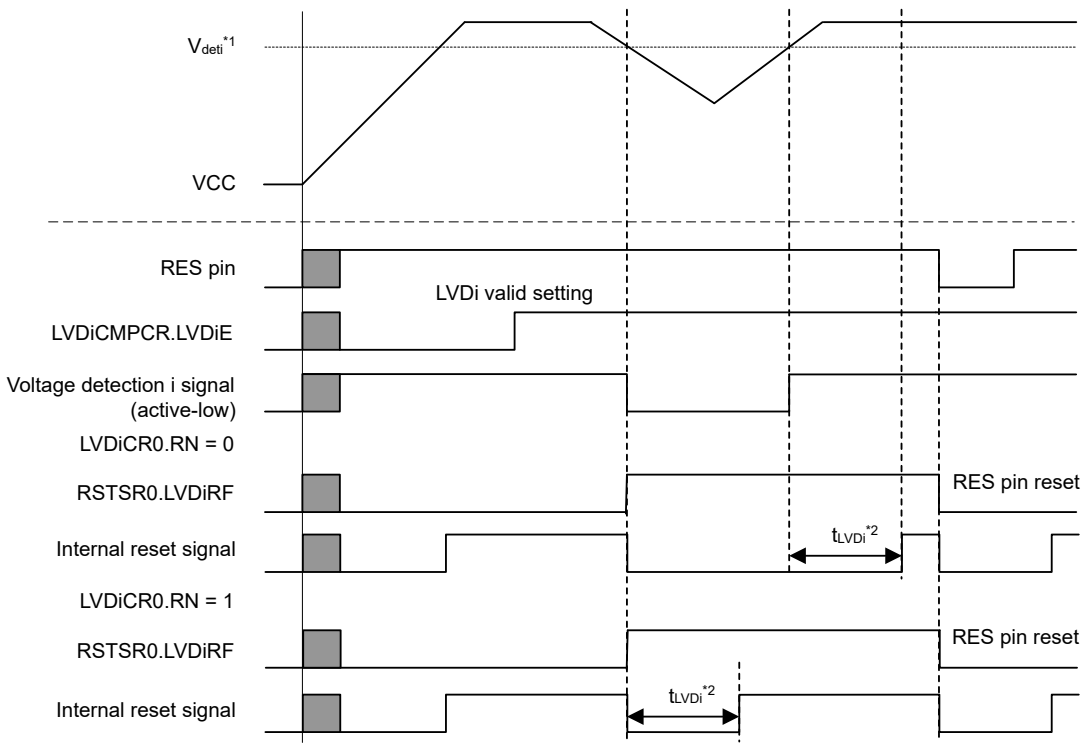

Note: For details on the electrical characteristics, see section 43, Electrical Characteristics.
Note 1. V_{deti} indicates the detection level of a voltage monitor 1 reset and a voltage monitor 2 reset (i = 1, 2).
Note 2. t_{LVDi} indicates the time for a voltage monitor 1 reset and a voltage monitor 2 reset (i = 1, 2).

Figure 5.2 Example of operations during voltage monitor 1 and voltage monitor 2 resets

5.3.4 Independent Watchdog Timer Reset

The independent watchdog timer reset is an internal reset generated from the Independent Watchdog Timer (IWDT). Output of the reset from the IWDT can be selected in the Option Function Select Register 0 (OFS0).

When output of the independent watchdog timer reset is selected, the reset is generated if the IWDT underflows, or if data is written when refresh operation is disabled. When the internal reset time (t_{RESW2}) elapses after the independent watchdog timer reset is generated, the internal reset is canceled and the CPU starts the reset exception handling.

For details on the independent watchdog timer reset, see section 24, Independent Watchdog Timer (IWDT).

5.3.5 Watchdog Timer Reset

The watchdog timer reset is an internal reset generated from the Watchdog Timer (WDT). Output of the reset from the WDT can be selected in the WDT Reset Control Register (WDTRCR) or Option Function Select register 0 (OFS0).

When output of the watchdog timer reset is selected, a watchdog timer reset is generated if the WDT underflows, or if data is written when refresh operation is disabled. When the internal reset time (t_{RESW2}) elapses after the watchdog timer reset is generated, the internal reset is canceled and the CPU starts the reset exception handling.

For details on the watchdog timer reset, see section 23, Watchdog Timer (WDT).

5.3.6 Software Reset

The software reset is an internal reset generated by a software setting of the SYSRESETREQ bit in the AIRCR register in the Arm core. When the SYSRESETREQ bit is set to 1, a software reset is generated. When the internal reset time (t_{RESW2}) elapses after the software reset is generated, the internal reset is canceled and the CPU starts the reset exception handling.

For details on the SYSRESETREQ bit, see the *ARM® Cortex®-M33 Technical Reference Manual*.

5.3.7 VRTC Domain Power-On Reset

The VRTC domain power-on reset is an internal reset generated by the power-on reset circuit for the VRTC domain.

After VRTC exceeds VRTC_POR and the specified period (t_{RTCPOR}) elapses, the internal reset is released. The state that the internal reset has been released can be confirmed by the VRTSR.VRTVLD flag. After the VRTSR.VRTVLD flag is set to 1, the VRTC domain becomes available. The VRTSR.PORDET flag is set to 1, indicating that a VRTC_POR has occurred, which must be cleared by software after the VRTC domain is available.

When VRTC falls below VRTC_POR, the VRTSR.VRTVLD flag is cleared and VRTSR.PORDET flag is set again.

VRTSR.VRTVLD and VRTSR.PORDET are described in section 7, Low Voltage Detection (LVD). Figure 5.3 shows examples of operations during a VRTC domain power-on reset.

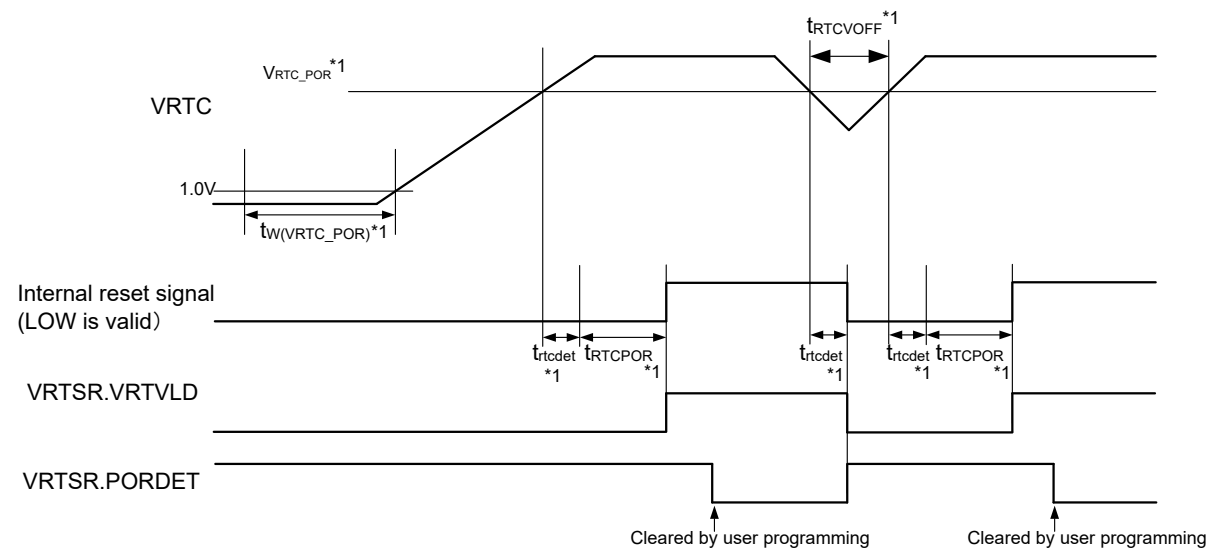

Note 1. For details on the electrical characteristics, see section 43, Electrical Characteristics.

Figure 5.3 Operation Examples during a VRTC Domain Power-On Reset

5.3.8 Determination of Cold/Warm Start

Read the CWSF flag in RSTSR2 to determine the cause of reset processing. This flag indicates whether a power-on reset caused the reset processing (cold start) or a reset signal input during operation caused the reset processing (warm start).

The CWSF flag is set to 0 when a power-on reset occurs (cold start), otherwise the flag is not set to 0. The flag is set to 1 when 1 is written to it through software. It is not set to 0 even on writing 0 to it.

Figure 5.4 shows an example of cold/warm start determination operation.

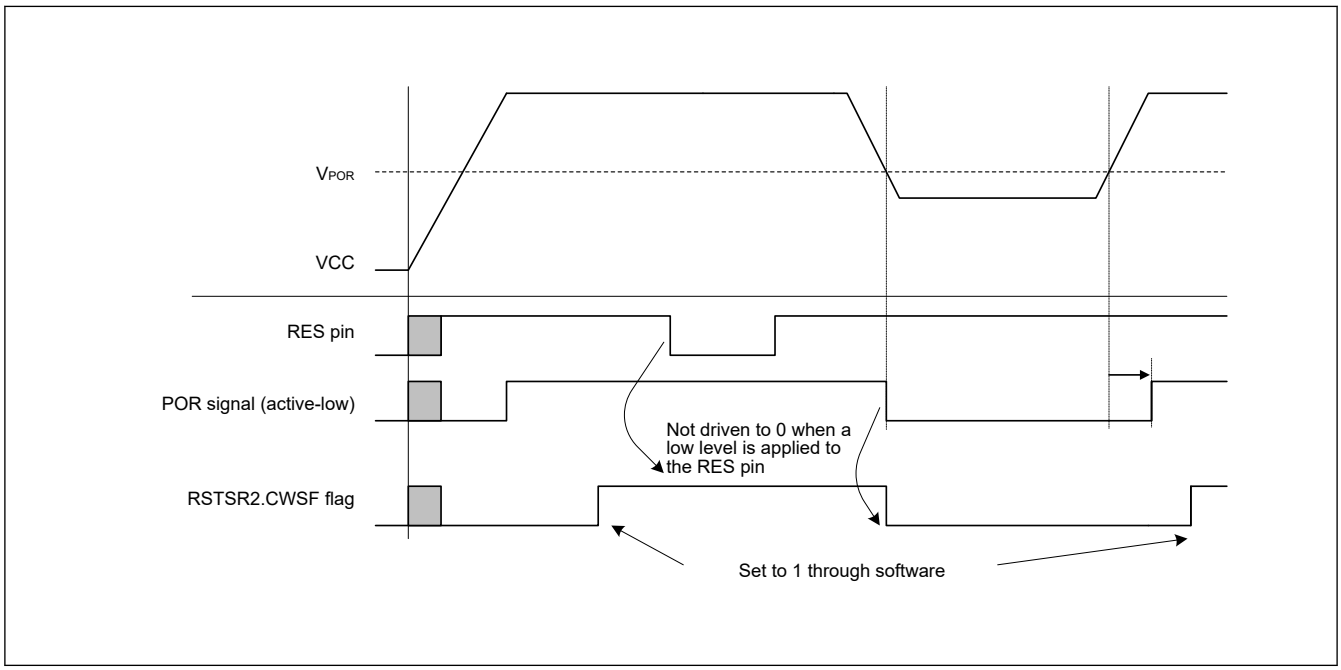

Figure 5.4 Example of cold/warm start determination operation

5.3.9 Determination of Reset Generation Source

Read RSTSR0 and RSTSR1 to determine which reset executes the reset exception handling.

Figure 5.5 shows an example of the flow to identify a reset generation source. The reset flag must be written with 0 after it is read as 1.

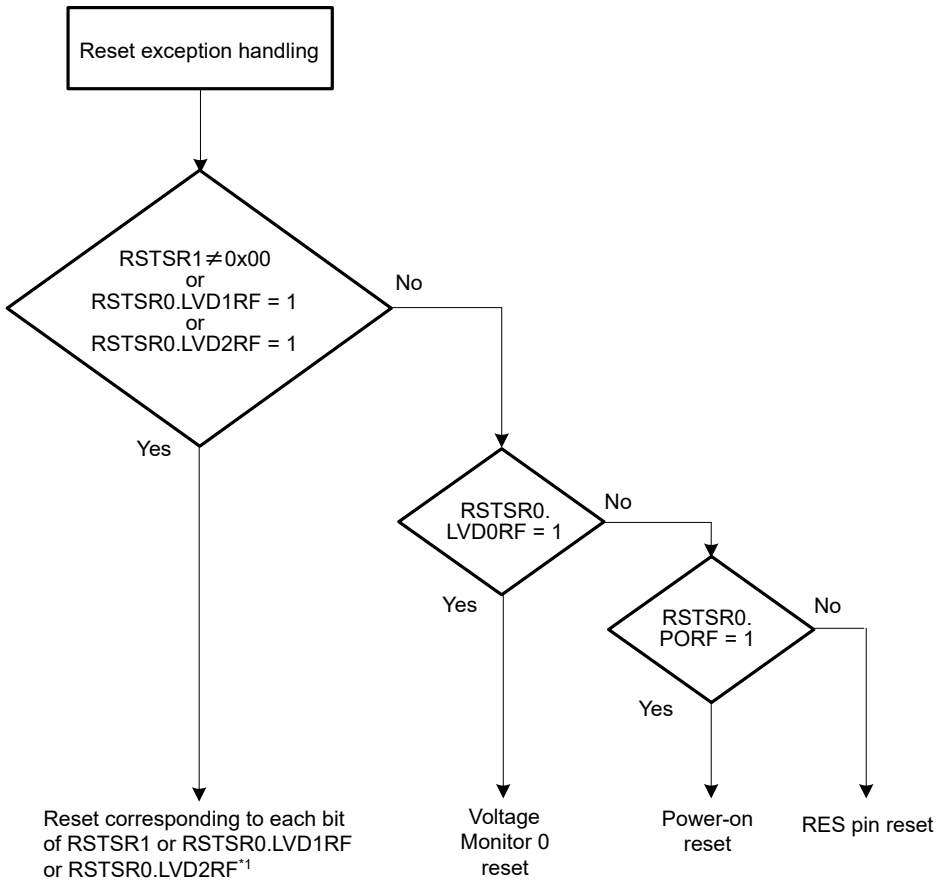

Note 1. When resets are generated simultaneously by two or more sources, the two or more corresponding reset flags will be set to 1.

Figure 5.5 Example of reset generation source determination flow

6. Option-Setting Memory

6.1 Overview

The option-setting memory determines the state of the MCU after a reset. The option-setting memory is allocated to the configuration setting area of the flash memory.

Figure 6.1 shows the option-setting memory area. The option-setting memory area has secure region. Table 6.1 shows the programming condition of the option-setting memory area.

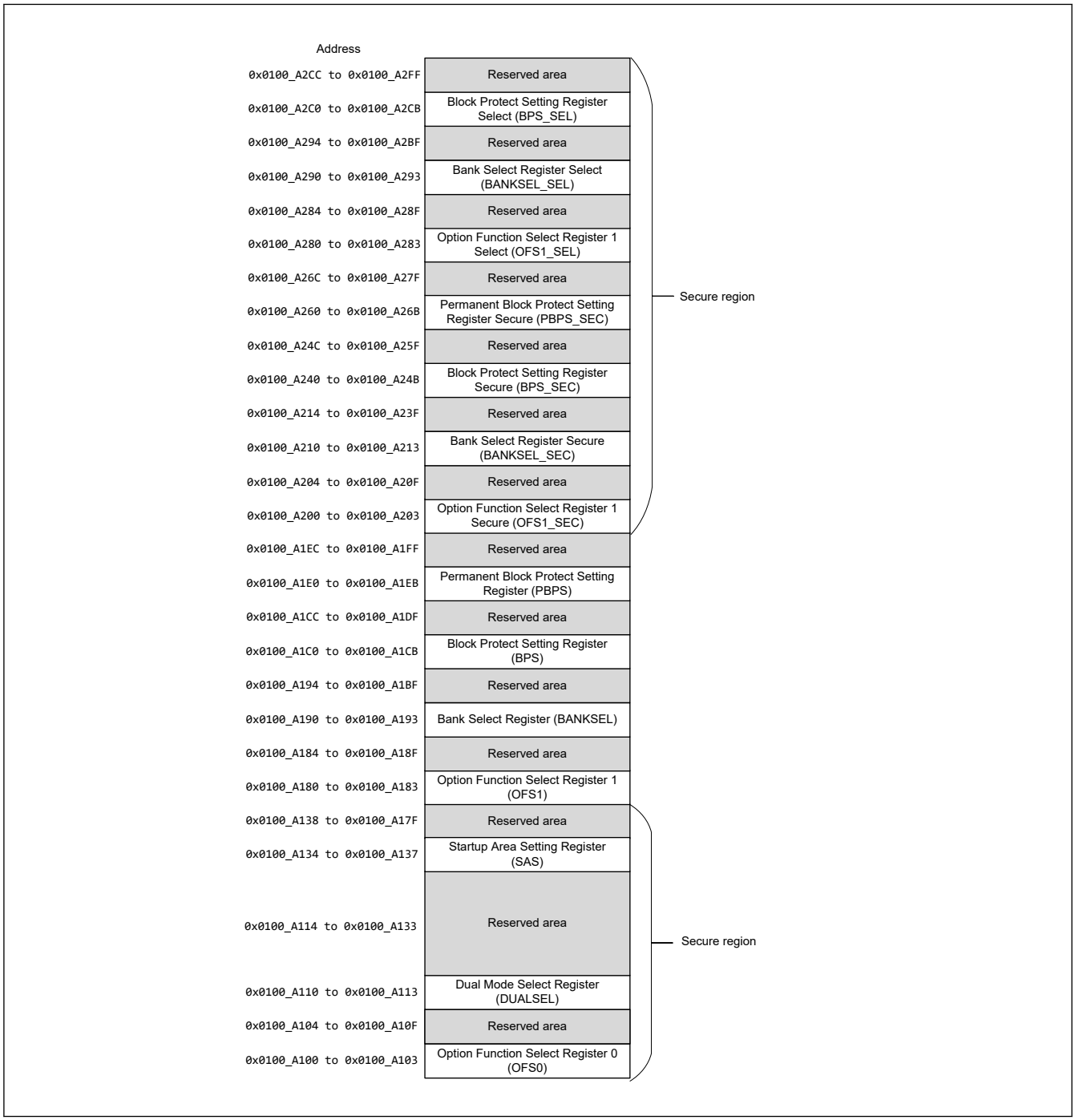

Figure 6.1 Option-setting memory area

Table 6.1 The programming condition of the option-setting memory area

	Self programming	Serial programming	Programming by the on-chip debugger
Secure region	Programming commands issued by secure access.	Programming commands issued when the device life cycle is SSD.	Programming commands issued when the debug level is DBG2.
Other region	Programming commands issued by secure or non-secure access.	Programming commands issued when the devise life cycle is SSD or NSECSD.	Programming commands issued when the debug level is DBG2 or DBG1.

6.2 Register Descriptions

6.2.1 OFS0 : Option Function Select Register 0

Address: 0x0100_A100

Bit position:	31	30	29	28	27	26	25	24	23	22	21	20	19	18	17	16
Bit field:	—	WDTSTPCTL	—	WDTRSTIRQS	WDTRPSS[1:0]		WDTRPES[1:0]		WDTCKS[3:0]				WDTTOPS[1:0]		WDTSTRT	—
Value after reset:	User setting*1															

Bit position:	15	14	13	12	11	10	9	8	7	6	5	4	3	2	1	0
Bit field:	—	IWDTSTPCTL	—	IWDTRSTIRQS	IWDTRPSS[1:0]		IWDTRPES[1:0]		IWDTCKS[3:0]				IWDTTOPS[1:0]		IWDTSTRT	—
Value after reset:	User setting*1															

Bit	Symbol	Function	R/W
0	—	When read, this bit returns the written value. The write value should be 1.	R
1	IWDTSTRT	IWDT Start Mode Select 0: Automatically activate IWDT after a reset (auto start mode) 1: Disable IWDT after a reset	R
3:2	IWDTTOPS[1:0]	IWDT Timeout Period Select 0 0: 128 cycles (0x007F) 0 1: 512 cycles (0x01FF) 1 0: 1024 cycles (0x03FF) 1 1: 2048 cycles (0x07FF)	R
7:4	IWDTCKS[3:0]	IWDT-Dedicated Clock Frequency Division Ratio Select 0x0: × 1 0x2: × 1/16 0x3: × 1/32 0x4: × 1/64 0xF: × 1/128 0x5: × 1/256 Others: Setting prohibited	R
9:8	IWDTRPES[1:0]	IWDT Window End Position Select 0 0: 75% 0 1: 50% 1 0: 25% 1 1: 0% (no window end position setting)	R
11:10	IWDTRPSS[1:0]	IWDT Window Start Position Select 0 0: 25% 0 1: 50% 1 0: 75% 1 1: 100% (no window start position setting)	R
12	IWDTRSTIRQS	IWDT Reset Interrupt Request Select 0: Interrupt 1: Reset	R

Bit	Symbol	Function	R/W
13	—	When read, this bit returns the written value. The write value should be 1.	R
14	IWDTSTPCTL	IWDT Stop Control 0: Continue counting 1: Stop counting when in Sleep, Snooze, or Software Standby mode	R
16:15	—	When read, these bits return the written value. The write value should be 1.	R
17	WDTSTRT	WDT Start Mode Select 0: Automatically activate WDT after a reset (auto start mode) 1: Stop WDT after a reset (register start mode)	R
19:18	WDTTOPS[1:0]	WDT Timeout Period Select 0 0: 1024 cycles (0x03FF) 0 1: 4096 cycles (0x0FFF) 1 0: 8192 cycles (0x1FFF) 1 1: 16384 cycles (0x3FFF)	R
23:20	WDTCKS[3:0]	WDT Clock Frequency Division Ratio Select 0x1: PCLKB divided by 4 0x4: PCLKB divided by 64 0xF: PCLKB divided by 128 0x6: PCLKB divided by 512 0x7: PCLKB divided by 2048 0x8: PCLKB divided by 8192 Others: Setting prohibited	R
25:24	WDTRPES[1:0]	WDT Window End Position Select 0 0: 75% 0 1: 50% 1 0: 25% 1 1: 0% (no window end position setting)	R
27:26	WDTRPSS[1:0]	WDT Window Start Position Select 0 0: 25% 0 1: 50% 1 0: 75% 1 1: 100% (no window start position setting)	R
28	WDTRSTIRQS	WDT Reset Interrupt Request Select 0: Interrupt 1: Reset	R
29	—	When read, these bits return the written value. The write value should be 1.	R
30	WDTSTPCTL	WDT Stop Control 0: Continue counting 1: Stop counting when entering Sleep mode	R
31	—	When read, these bits return the written value. The write value should be 1.	R

Note 1. The value in a blank product is 0xFFFFFFFF. It is set to the value written by your application.

IWDTSTRT bit (IWDT Start Mode Select)

The IWDTSTRT bit selects the mode in which the IWDT is activated after a reset (stopped state or activated state).

IWDTTOPS[1:0] bits (IWDT Timeout Period Select)

The IWDTTOPS[1:0] bits specify the timeout period, that is, the time it takes for the down counter to underflow, as 128, 512, 1024, or 2048 cycles of the frequency-divided clock set in the IWDTCKS[3:0] bits. The time it takes for the counter to underflow after a refresh operation is determined by the combination of the IWDTCKS[3:0] and IWDTTOPS[1:0] bits.

For details, see section 24, Independent Watchdog Timer (IWDT).

IWDTCKS[3:0] bits (IWDT-Dedicated Clock Frequency Division Ratio Select)

The IWDTCKS[3:0] bits specify the division ratio of the prescaler for dividing the frequency of the clock for the IWDT as 1/1, 1/16, 1/32, 1/64, 1/128, and 1/256. Using this setting combined with the IWDTTOPS[1:0] bits setting, the IWDT counting period can be set from 128 to 524288 IWDT clock cycles.

For details, see section 24, Independent Watchdog Timer (IWDT).

IWDTRPES[1:0] bits (IWDT Window End Position Select)

The IWDTRPES[1:0] bits specify the position where the window for the down counter ends as 0%, 25%, 50%, or 75% of the count value. The value of the window end position must be smaller than the value of the window start position, otherwise only the value for the window start position is valid.

The counter values associated with the settings for the start and end positions of the window in the IWDTRPSS[1:0] and IWDTRPES[1:0] bits vary with the setting in the IWDTTOPS[1:0] bits.

For details, see section 24, Independent Watchdog Timer (IWDT).

IWDTRPSS[1:0] bits (IWDT Window Start Position Select)

The IWDTRPSS[1:0] bits specify the position where the window for the down counter starts as 25%, 50%, 75%, or 100% of the counted value. The point at which counting starts is 100% and the point at which an underflow occurs is 0%. The interval between the window starts and ends positions becomes the period in which a refresh is possible. Refresh is not possible outside this period.

For details, see section 24, Independent Watchdog Timer (IWDT).

IWDTRSTIRQS bit (IWDT Reset Interrupt Request Select)

The IWDTRSTIRQS bit selects the operation on an underflow of the down counter or generation of a refresh error. The operation is selectable to an independent watchdog timer reset, a non-maskable interrupt request, or an interrupt request.

For details, see section 24, Independent Watchdog Timer (IWDT).

IWDTSTPCTL bit (IWDT Stop Control)

The IWDTSTPCTL bit specifies whether to stop counting when entering Sleep mode, Snooze mode, or Software Standby mode.

For details, see section 24, Independent Watchdog Timer (IWDT).

WDTSTRT bit (WDT Start Mode Select)

The WDTSTRT bit selects the mode in which the WDT is activated after a reset (stopped state or activated in auto start mode). When WDT is activated in auto start mode, the OFS0 register setting for the WDT is valid.

WDTTOPS[1:0] bits (WDT Timeout Period Select)

The WDTTOPS[1:0] bits specify the timeout period, that is, the time it takes for the down counter to underflow as 1024, 4096, 8192, or 16384 cycles of the frequency-divided clock set in the WDTCKS[3:0] bits. The number of PCLKB cycles that takes to underflow after a refresh operation is determined by a combination of the WDTCKS[3:0] and WDTTOPS[1:0] bits.

For details, see section 23, Watchdog Timer (WDT).

WDTCKS[3:0] bits (WDT Clock Frequency Division Ratio Select)

The WDTCKS[3:0] bits specify the division ratio of the prescaler for dividing the frequency of PCLKB as 1/4, 1/64, 1/128, 1/512, 1/2048, and 1/8192. Using this setting combined with the WDTTOPS[1:0] bits setting, the WDT counting period can be set from 4096 to 134217728 PCLKB cycles.

For details, see section 23, Watchdog Timer (WDT).

WDTRPES[1:0] bits (WDT Window End Position Select)

The WDTRPES[1:0] bits specify the position where the window on the down counter ends as 0%, 25%, 50%, or 75% of the counted value. The value of the window end position must be smaller than the value of the window start position, otherwise only the value for the window start position is valid.

The counter values associated with the settings for the start and end positions of the window in the WDTRPSS[1:0] and WDTRPES[1:0] bits vary with the setting of the WDTTOPS[1:0] bits.

For details, see section 23, Watchdog Timer (WDT).

WDTRPSS[1:0] bits (WDT Window Start Position Select)

The WDTRPSS[1:0] bits specify the position where the window for the down counter starts as 25%, 50%, 75%, or 100% of the counted value. The point at which counting starts is 100% and the point at which an underflow occurs is 0%. The interval between the positions where the window starts and ends becomes the period in which a refresh is possible.

Refresh is not possible outside this period.

For details, see section 23, Watchdog Timer (WDT).

WDTRSTIRQS bit (WDT Reset Interrupt Request Select)

The WDTRSTIRQS bit selects the operation on an underflow of the down-counter or generation of a refresh error. The operation is selectable to a watchdog timer reset, a non-maskable interrupt request, or an interrupt request.

For details, see section 23, Watchdog Timer (WDT).

WDTSTPCTL bit (WDT Stop Control)

The WDTSTPCTL bit specifies whether to stop counting when entering Sleep mode.

For details, see section 23, Watchdog Timer (WDT).

6.2.2 DUALSEL : Dual Mode Select Register

address: 0x0100_A110

Bit position:	31	30	29	28	27	26	25	24	23	22	21	20	19	18	17	16
Bit field:	—	—	—	—	—	—	—	—	—	—	—	—	—	—	—	—
Value after reset:	User setting*1															

Bit position:	15	14	13	12	11	10	9	8	7	6	5	4	3	2	1	0
Bit field:	—	—	—	—	—	—	—	—	—	—	—	—	—	BANKMD[2:0]		
Value after reset:	User setting*1															

Bit	Symbol	Function	R/W
2:0	BANKMD[2:0]	Bank Mode Select 0 0 0: Dual mode 1 1 1: Linear mode Others: Setting prohibited	R
31:3	—	When read, these bits return the written value. The write value should be 1.	R

Note 1. The value in a blank product is 0xFFFF_FFFF. It is set to the value written by your application

BANKMD[2:0] bit (Bank Mode Select)

The BANKMD[2:0] bits select bank mode of the dual bank function of the code flash memory

6.2.3 SAS : Startup Area Setting Register

Address: 0x0100_A134

Bit position:	31	30	29	28	27	26	25	24	23	22	21	20	19	18	17	16
Bit field:	BTFLG	—	—	—	—	—	—	—	—	—	—	—	—	—	—	—
Value after reset:	User setting															

Bit position:	15	14	13	12	11	10	9	8	7	6	5	4	3	2	1	0
Bit field:	FSPR	—	—	—	—	—	—	—	—	—	—	—	—	—	—	—
Value after reset:	User setting															

Bit	Symbol	Function	R/W
14:0	—	When read, these bits return the written value. The write value should be 1.	R
15	FSPR	Protection of Startup Area Select Function This bit controls the programming of the write/erase protection for the Startup Area Select flag (SAS.BTFLG), and the temporary boot swap control. When this bit is set to 0, it cannot be changed to 1. 0: Executing the configuration setting command for programming the Startup Area Select flag (SAS.BTFLG) is invalid. 1: Executing the configuration setting command for programming the Startup Area Select flag (SAS.BTFLG) is valid.	R
30:16	—	When read, these bits return the written value. The write value should be 1.	R
31	BTFLG	Startup Area Select Flag This bit specifies whether the address of the startup area is exchanged for the boot swap function or not. In dual mode (the DUALSEL.BANKMD[2:0] bits are 000b), set 1 to this bit. 0: First 8-KB area (0x0000_0000 to 0x0000_1FFF) and second 8-KB area (0x0000_2000 to 0x0000_3FFF) are exchanged. 1: First 8-KB area (0x0000_0000 to 0x0000_1FFF) and second 8-KB area (0x0000_2000 to 0x0000_3FFF) are not exchanged.	R

6.2.4 OFS1, OFS1_SEC : Option Function Select Register 1 for Non-secure and Secure

Address: OFS1: 0x0100_A180
OFS1_SEC: 0x0100_A200

Bit position:	31	30	29	28	27	26	25	24	23	22	21	20	19	18	17	16
Bit field:	—	—	—	—	—	—	—	—	—	—	—	—	—	—	—	—
Value after reset:	The value set by the user*1															

Bit position:	15	14	13	12	11	10	9	8	7	6	5	4	3	2	1	0
Bit field:	—	—	—	—	HOCOFRQ0[2:0]			HOCOEN	—	—	—	—	—	LVDAS	VDSEL[1:0]	
Value after reset:	The value set by the user*1															

Bit	Symbol	Function	R/W
1:0	VDSEL[1:0]	Voltage Detection 0 Level Select*2 0 0: Vdet0_0 0 1: Vdet0_1 1 0: Vdet0_2 1 1: Vdet0_3	R
2	LVDAS	Voltage Detection 0 Circuit Start 0: Enable voltage monitor 0 reset after a reset 1: Disable voltage monitor 0 reset after a reset	R
7:3	—	When read, these bits return the written value. The write value should be 1.	R
8	HOCOEN	HOCO Oscillation Enable 0: Enable HOCO oscillation after a reset 1: Disable HOCO oscillation after a reset	R
11:9	HOCOFRQ0[2:0]	HOCO Frequency Setting 0 0 0 0: 48 MHz 0 0 1: 64 MHz 0 1 0: 80 MHz 1 0 0: 24 MHz 1 0 1: 32 MHz 1 1 0: 40 MHz Others: Setting prohibited	R
31:12	—	When read, these bits return the written value. The write value should be 1.	R

Note 1. The value in a blank product is 0xFFFFFFFF. It is set to the value written by your application.
Note 2. See section 43, Electrical Characteristics for the voltage levels to be detected.

OFS1 register is for Non-secure developer, and OFS1_SEC register is for Secure developer.

VDSEL[1:0] bits (Voltage Detection 0 Level Select)

The VDSEL[1:0] bits select the voltage detection level of the voltage detection 0 circuit.

LVDAS bits (Voltage Detection 0 Circuit Start)

The LVDAS bit selects whether the voltage monitor 0 reset is enabled or disabled after a reset.

HOCOEN bit (HOCO Oscillation Enable)

The HOCOEN bit selects whether the HOCO oscillation is enabled or disabled after a reset. Setting this bit to 0 allows the HOCO oscillation to start before the CPU starts operation, which reduces the wait time for oscillation stabilization.

Note: When the HOCOEN bit is set to 0, the system clock source is not switched to HOCO. The system clock source is only switched to HOCO by setting the Clock Source Select bits (SCKSCR.CKSEL[2:0]). To use the HOCO clock, you must set the HOCO Frequency Setting 0 bits (OFS1.HOCOFRQ0[2:0][*1]) to an optimum value.

Note 1. OFS1 is for non-secure developers and OFS1_SEC is for secure developers. The applied setting value is determined by OFS1_SEL.

The value of OFS1.HOCOFRQ0[2:0] bits is automatically transferred to HOCOCR2.HCFRQ0[2:0] bits after reset, therefore HOCO frequency can also be specified by HOCOCR2.HCFRQ0[2:0] bits when OFS1.HOCOEN = 1.

HOCOFRQ0[2:0] bits (HOCO Frequency Setting 0)

The HOCOFRQ0[2:0] bits specify the HOCO frequency after a reset as 24, 32, 40, 48, 64, or 80 MHz.

6.2.5 OFS1_SEL : Option Function Select Register 1 for Security Attribution

Address: OFS1_SEL: 0x0100_A280

Bit position:	31	30	29	28	27	26	25	24	23	22	21	20	19	18	17	16
Bit field:	—	—	—	—	—	—	—	—	—	—	—	—	—	—	—	—
Value after reset:	User setting[*1]															

Bit position:	15	14	13	12	11	10	9	8	7	6	5	4	3	2	1	0
Bit field:	—	—	—	—	HOCOFRQ0[2:0]			HOCOEN	—	—	—	—	—	LVDAS	VDSEL[1:0]	
Value after reset:	User setting[*1]															

Bit	Symbol	Function	R/W
1:0	VDSEL[1:0]	Security attributes of Voltage Detection 0 Level Select 0 0: Select OFS1_SEC.VDSEL[1:0] 1 1: Select OFS1.VDSEL[1:0] Others: Setting prohibited	R
2	LVDAS	Security attributes of Voltage Detection 0 Circuit Start 0: Select OFS1_SEC.LVDAS 1: Select OFS1.LVDAS	R
7:3	—	When read, these bits return the written value. The write value should be 1.	R
8	HOCOEN	Security attributes of HOCO Oscillation Enable 0: Select OFS1_SEC.HOCOEN 1: Select OFS1.HOCOEN	R
11:9	HOCOFRQ0[2:0]	Security attributes of HOCO Frequency Setting 0 0 0 0: Select OFS1_SEC.HOCOFRQ0[2:0] 1 1 1: Select OFS1.HOCOFRQ0[2:0] Others: Setting prohibited	R
31:12	—	When read, these bits return the written value. The write value should be 1.	R

Note 1. The value in a blank product is 0xFFFF_FFFF. It is set to the value written by your application.

The OFS1_SEL register selects the security attribute. Which security attribute is applied, OFS or OFS_SEC, is determined by the setting value of the corresponding bit in the OFS1_SEL register.

For details, see section 6.3.3. Security attribution of option-setting memory.

6.2.6 BANKSEL, BANKSEL_SEC : Bank Select Register for Non-secure and Secure

Address: BANKSEL: 0x0100_A190
BANKSEL_SEC: 0x0100_A210

Bit position:	31	30	29	28	27	26	25	24	23	22	21	20	19	18	17	16
Bit field:	—	—	—	—	—	—	—	—	—	—	—	—	—	—	BLCKSWP[1:0]	
Value after reset:	User setting*1															

Bit position:	15	14	13	12	11	10	9	8	7	6	5	4	3	2	1	0
Bit field:	—	—	—	—	—	—	—	—	—	—	—	—	—	BANKSWP[2:0]		
Value after reset:	User setting*1															

Bit	Symbol	Function	R/W
2:0	BANKSWP[2:0]	Startup Bank Switch This setting is valid in dual mode. 0 0 0: Start address of Bank0 is 0x0020_0000 and Bnak1 is 0x0000_0000 in dual mode 1 1 1: Start address of Bank0 is 0x0000_0000 and Bnak1 is 0x0020_0000 in dual mode Others: Setting prohibited	R
15:3	—	When read, these bits return the written value. The write value should be 1.	R
17:16	BLCKSWP[1:0]	Block Swap Select When all bits are set to 1, the block swap is disabled. When at least one bit is set to 0, block swap is enabled and the corresponding blocks of code flash memory are swapped. This setting is valid in linear mode.	R
31:18	—	When read, these bits return the written value. The write value should be 1.	R

Note 1. The value in a blank product is 0xFFFF_FFFF. It is set to the value written by your application.

BANKSEL register is for Non-secure developer, and BANKSEL_SEC register is for Secure developer.

BANKSWP[2:0] bits (Startup Bank Switch)

The BANKSWP[2:0] bits select the start address of the bank0 and bank1 of code flash memory in dual mode. For details of the startup bank selection, see section 39.11.4.2. Selecting the Startup Bank.

BLCKSWP[1:0] bit (Block Swap Select)

The BLCKSWP[1:0] bits enable the block swap and select the valid blocks of the code flash memory in linear mode. Figure 6.2 shows the mapping of the flash memory in linear mode. Table 6.2 shows the specification of BLCKSWP bits for each product. Unused bits are reserved and should be set to 1. For details of block swap, see section 39.11.5. Block Swap Function.

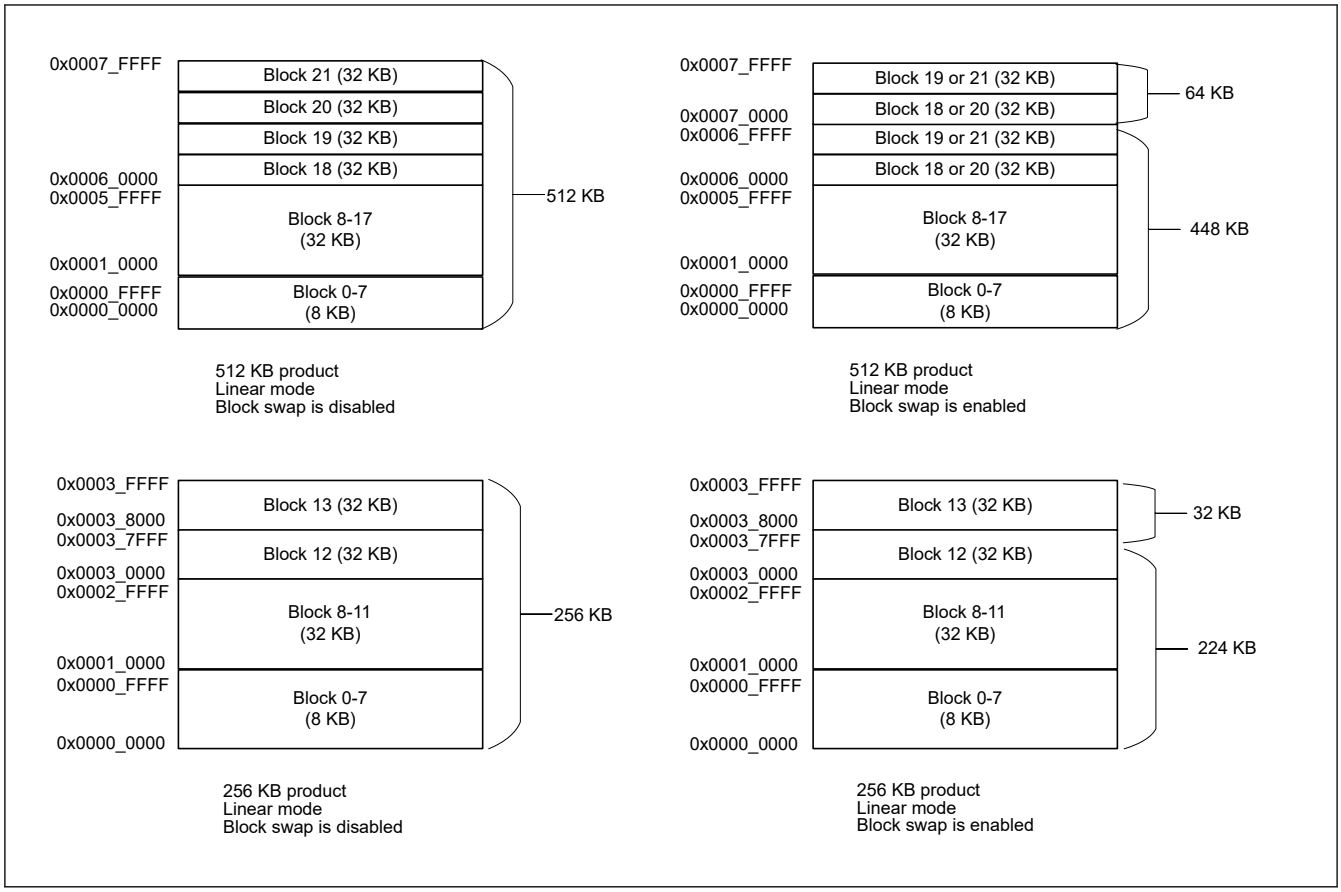

Figure 6.2 Mapping of the flash memory in linear mode

Table 6.2 Specification of BLCKSWP bits for each product

	BLCKSWP bits	Select 0/1
512 KB product	BLCKSWP[0]	1 : Block18 start address is 0x0006_0000. Block20 start address is 0x0007_0000. 0 : Block18 start address is 0x0007_0000. Block20 start address is 0x0006_0000.
	BLCKSWP[1]	1 : Block19 start address is 0x0006_8000. Block21 start address is 0x0007_8000. 0 : Block19 start address is 0x0007_8000. Block21 start address is 0x0006_8000.
256 KB product	BLCKSWP[0]	1 : Block12 start address is 0x0003_0000. Block13 start address is 0x0003_8000. 0 : Block12 start address is 0x0003_8000. Block13 start address is 0x0003_0000.

6.2.7 BANKSEL_SEL : Bank Select Register for Security Attribution

Address: BANKSEL_SEL: 0x0100_A290

Bit position:	31	30	29	28	27	26	25	24	23	22	21	20	19	18	17	16
Bit field:	—	—	—	—	—	—	—	—	—	—	—	—	—	—	BLCKSWP[1:0]	
Value after reset:	User setting*1															

Bit position:	15	14	13	12	11	10	9	8	7	6	5	4	3	2	1	0
Bit field:	—	—	—	—	—	—	—	—	—	—	—	—	—	BANKSWP[2:0]		
Value after reset:	User setting*1															

Bit	Symbol	Function	R/W
2:0	BANKSWP[2:0]	Security Attributes of Startup Bank Switch This setting is valid in dual mode. 0 0 0: Select BANKSEL_SEC.BANKSWP[2:0] 1 1 1: Select BANKSEL.BANKSWP[2:0] Others: Setting prohibited	R
15:3	—	When read, these bits return the written value. The write value should be 1.	R
17:16	BLCKSWP[1:0]	Security Attributes of Block Swap Select BANKSEL_SEL.BLCKSWP[1:0] bits can select Secure or Non-secure access for each bit. The bit positions of BLCKSWP[1:0] in the BANKSEL_SEL register and the bit positions of BLCKSWP[1:0] in the BANKSEL and BANKSEL_SEC registers correspond to indicate the same block. For example, when BANKSEL_SEL.BLCKSWP[0] = 0 and BANKSEL_SEL.BLCKSWP[1] = 1, BANKSEL_SEC.BLCKSWP[0] and BANKSEL.BLCKSWP[1] are selected.	R
31:18	—	When read, these bits return the written value. The write value should be 1.	R

Note 1. The value in a blank product is 0xFFFF_FFFF. It is set to the value written by your application.

The BANKSEL_SEL register selects the security attribute. Which security attribute is applied, BANKSEL or BANKSEL_SEC, is determined by the setting value of corresponding bit in the BANKSEL_SEL register.

For details, see section 6.3.3. Security attribution of option-setting memory.

6.2.8 BPS, BPS_SEC, BPS_SEL : Block Protect Setting Register

address:

BPS: 0x0100_A1C0, 0x0100_A1C8
BPS_SEC: 0x0100_A240, 0x0100_A248
BPS_SEL: 0x0100_A2C0, 0x0100_A2C8

Bit position:	31	0
Bit field:		
Value after reset:	User setting*1	

Note 1. The value in a blank product is 0xFFFFFFFF. It is set to the value written by your application.

Only secure developer can program BPS_SEC and BPS_SEL registers. BPS_SEC register is for secure developer, and BPS register is for non-secure developer. The applied setting value is determined by the setting value of the corresponding bit in BPS_SEL register. For details, see section 6.3.3. Security attribution of option-setting memory.

The BPS and BPS_SEC registers invalidate the programming and erasure to the code flash memory. When the bit of this register is set to 0, the programming and erasure to the corresponding block are invalid. Figure 6.3 shows the code flash block structure of each product. Figure 6.4 shows the relationship between the bit of register and the block number. Unused bits are reserved and should be set to 1.

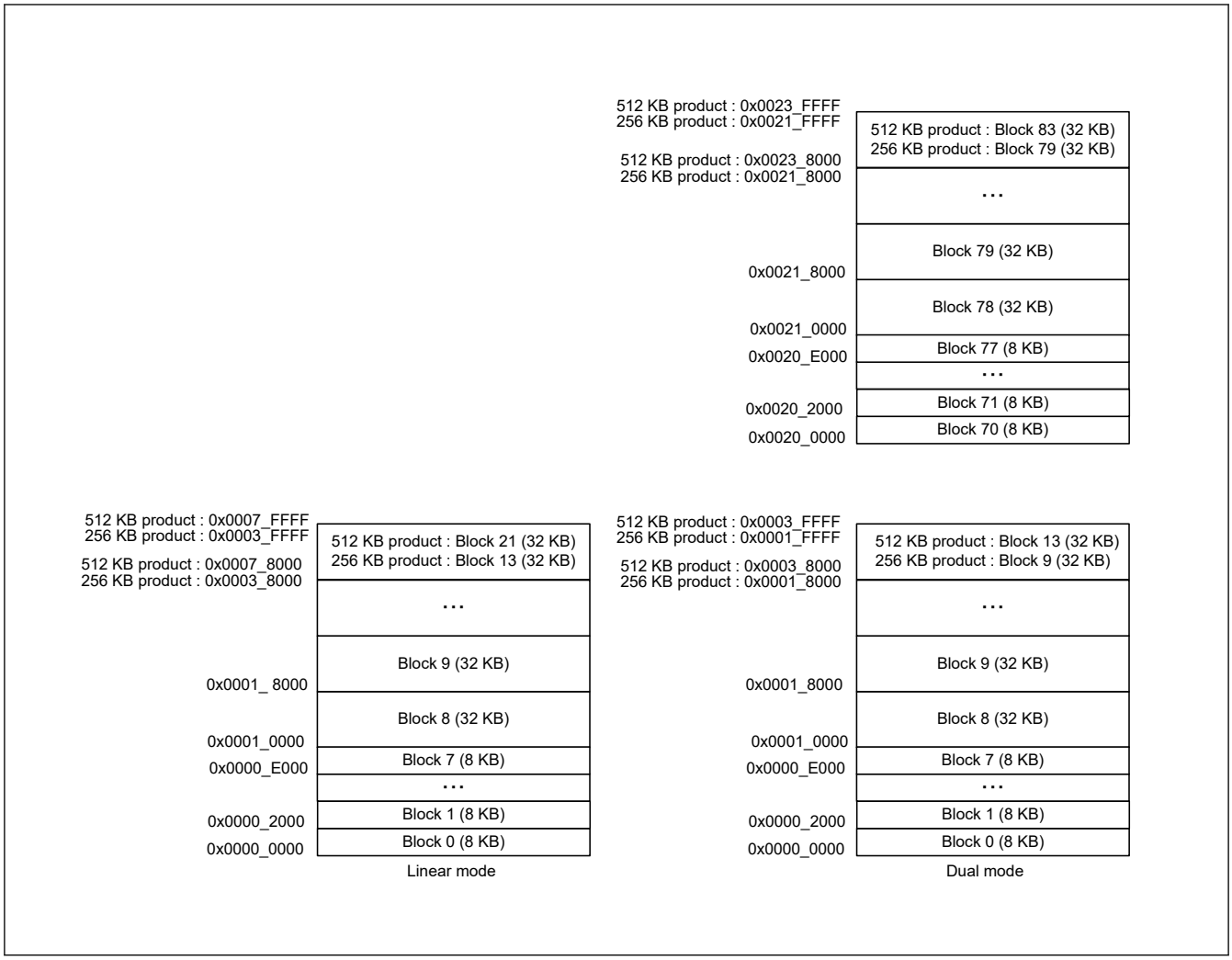

Figure 6.3 Code flash block structure

Regiser	Address	+31	+30	+29	+28	+27	+26	+25	+24	+23	+22	+21	+20	+19	+18	+17	+16	+15	+14	+13	+12	+11	+10	+ 9	+ 8	+ 7	+ 6	+ 5	+ 4	+ 3	+ 2	+ 1	+ 0
BPS_SEL	0x0100_A2C8													83	82	81	80	79	78	77	76	75	74	73	72	71	70						
	0x0100_A2C4																																
	0x0100_A2C0											21	20	19	18	17	16	15	14	13	12	11	10	9	8	7	6	5	4	3	2	1	0
	⋮																																
BPS_SEC	0x0100_A248													83	82	81	80	79	78	77	76	75	74	73	72	71	70						
	0x0100_A244																																
	0x0100_A240											21	20	19	18	17	16	15	14	13	12	11	10	9	8	7	6	5	4	3	2	1	0
	⋮																																
BPS	0x0100_A1C8													83	82	81	80	79	78	77	76	75	74	73	72	71	70						
	0x0100_A1C4																																
	0x0100_A1C0											21	20	19	18	17	16	15	14	13	12	11	10	9	8	7	6	5	4	3	2	1	0

Figure 6.4 Relationship between the bit of register and the block number

6.2.9 PBPS, PBPS_SEC : Permanent Block Protect Setting Register

Address: PBPS: 0x0100_A1E0, 0x0100_A1E8
PBPS_SEC: 0x0100_A260, 0x0100_A268

Bit position:	31	0
Bit field:		
Value after reset:	User setting*1	

Note 1. The value in a blank product is 0xFFFFFFFF. It is set to the value written by your application.

Only secure developer can program PBPS_SEC register. PBPS_SEC register is for secure developer, and PBPS register is for non-secure developer. The applied setting value is determined by the setting value of the corresponding bit in BPS_SEL register. For details, see section 6.3.3. Security attribution of option-setting memory. The security attribution register is same BPS_SEL register between the block protection and permanent block protection.

The PBPS and PBPS_SEC registers invalidate writes to bits of BPS and BPS_SEC. The bit of this register can be set to 0 when corresponding bit of BPS and BPS_SEC is set to 0. When the bit of this register is set to 0, writing the corresponding bit of BPS and BPS_SEC register is invalid. Once the bit of this register is set to 0, it is impossible to change the bit to 1. Table 6.3 shows the relationship between the bit of applied PBPS and bit of applied BPS.

The relationship between the bit of this register and the block number is same as BPS and BPS_SEC registers (section 6.2.8. BPS, BPS_SEC, BPS_SEL : Block Protect Setting Register). Unused bits are reserved and should be set to 1.

Table 6.3 The relationship between the bit of PBPS, PBPS_SEC and bit of BPS, BPS_SEC

The bit of applied PBPS	The bit of applied BPS	Content
1	1	Programming and erasure to the corresponding block is valid.
1	0	Programming and erasure to the corresponding block is invalid. This protection can be canceled by FBPROT0 or FBPROT1 registers.
0	1	Cannot set this condition
0	0	Programming and erasure to the corresponding block is invalid permanently

6.3 Setting Option-Setting Memory

6.3.1 Allocation of Data in Option-Setting Memory

Programming data is allocated to the addresses in the option-setting memory shown in Figure 6.1. The allocated data is used by tools such as a flash programming software or an on-chip debugger.

Note: Programming formats vary depending on the compiler. See the compiler manual for details.

6.3.2 Setting Data for Programming Option-Setting Memory

Allocating data according to the procedure described in section 6.3.1. Allocation of Data in Option-Setting Memory, alone does not actually write the data to the option-setting memory. You must also follow one of the actions described in this section.

(1) Changing the option-setting memory by self-programming

Use the configuration setting command to write data to the option-setting memory in the configuration setting area.

The option-setting memory does not support background operations (BGO). When writing the option-setting memory, jump to SRAM after copying writing software to SRAM.

For details of the configuration setting command, see section 39, Flash Memory.

(2) Debugging through an OCD or programming by a flash writer

This procedure depends on the tool in use, see the tool manual for details.

The MCU provides two setting procedures:

- Read the data allocated as described in section 6.3.1. Allocation of Data in Option-Setting Memory, from an object file or Motorola S-format file generated by the compiler, and write the data to the MCU
- Use the GUI interface of the tool to program the same data as allocated in section 6.3.1. Allocation of Data in Option-Setting Memory.

6.3.3 Security attribution of option-setting memory

Some functionality has 3 registers for non-secure (FUNC NAME), and secure (FUNC NAME_SEC), and security attribution (FUNC NAME_SEL). Only secure developer can set the registers for secure and security attribution. As shown in Figure 6.5, when the bit of security attribution register is set to 0, the corresponding bit of secure register is applied. When the bit of security attribution register is set to 1, the corresponding bit of non-secure register is applied.

For example, if the secure developer wants to configure LVD of OFS1 as secure, HOCO of OFS1 as non-secure, the secure developer needs to set OFS1_SEL as follows.

OFS1_SEL = 0xFFFF_FFF8

By this setting, LVDAS and VDSEL[1:0] values of OFS1_SEC and HOCOFRQ0[2:0] and HOCOEN values of OFS1 are applied to MCU. The reserved bits of the security attribution register (FUNC NAME_SEL) should be set to 1.

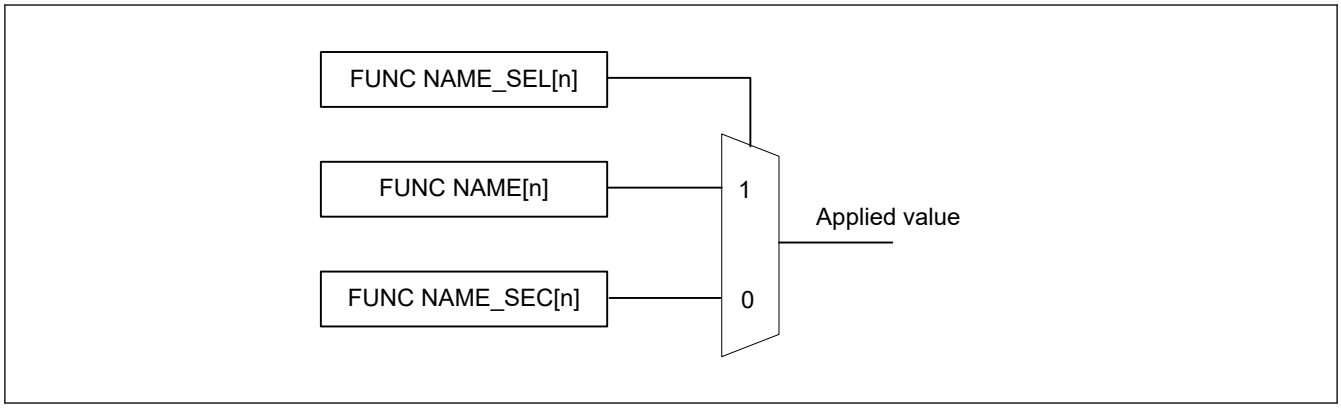

Figure 6.5 Selection of applied value

6.3.4 Timing of the Setting Value

For SAS, BPS, BPS_SEC, PBPS, and PBPS_SEC registers, the setting value of the related startup area and block protection is applied immediately after programming. For other registers, the setting value is applied after the MCU is reset.

In case the programming using the serial programming mode in customer's factory, be careful that the block protection for secure user is applied after MCU is reset. Because initial value of the security attribution registers of block protection (BPS_SEL) is 1 (non-secure), the block protection setting for secure developer (BPS_SEC/PBPS_SEC) is not applied until MCU is reset even if the corresponding bit of BPS_SEL is programmed to 0 (secure).

6.4 Usage Notes

6.4.1 Data for Programming Reserved Areas and Reserved Bits in the Option-Setting Memory

When reserved areas and reserved bits in the option-setting memory are within the scope of programming, write 1 to all bits of reserved areas and all reserved bits. If 0 is written to these bits, normal operation cannot be guaranteed.

7. Low Voltage Detection (LVD)

7.1 Overview

The Low Voltage Detection (LVD) module monitors the voltage level input to the VCC pin, EXLVDVBAT pin, VRTC pin, and EXLVD pin. The detection level can be selected by register settings. The LVD module consists of six separate low voltage detectors (LVD0, LVD1, LVD2, LVD_EXLVDVBAT, LVD_VRTC, and LVD_EXLVD). LVD0, LVD1, and LVD2 measure the voltage level input to the VCC pin. LVD_EXLVDVBAT measures the voltage level input to the EXLVDVBAT pin. LVD_VRTC measures the voltage level input to the VRTC pin. LVD2 and LVD_EXLVD measure the voltage level input to the EXLVD pin. LVD registers allow your application to configure detection of VCC, EXLVDVBAT, VRTC, and EXLVD changes at various voltage thresholds.

Voltage monitor registers are used to configure the LVD to trigger an interrupt, event link output, or reset when the thresholds are crossed.

Table 7.1 and Table 7.2 list the LVD specifications. Figure 7.1 shows a block diagram of the voltage monitor 0 reset generation circuit. Figure 7.2 shows a block diagram of the voltage monitor 1 interrupt and reset circuit, Figure 7.3 shows a block diagram of the voltage monitor 2 interrupt and reset circuits. Figure 7.4, Figure 7.5, and Figure 7.6 show block diagrams of LVD_EXLVDVBAT, LVD_VRTC, and LVD_EXLVD interrupt circuits. Table 7.3 lists the I/O pins.

Table 7.1 LVD specifications

Parameter		Voltage monitor 0	Voltage monitor 1	Voltage monitor 2
Means for setting up operation		OFS1 register	Registers	Registers
Target for monitoring		VCC pin input voltage	VCC pin input voltage	VCC or EXLVD pin input voltage
Monitored voltage		V_{det0}	V_{det1}	V_{det2}
Detected event		Voltage falls past V_{det0}	Voltage rises or falls past V_{det1}	Voltage[*1] rises or falls past V_{det2}
Detection voltage		Selectable from 4 different levels in the OFS1.VDSEL[1:0] bits	Selectable from 12 different levels in the LVD1CMPCR.LVD1LVL[3:0] bits	Selectable from 8 different levels in the LVD2CMPCR.LVD2LVL[2:0] bits
Monitoring flag		None	LVD1SR.MON flag: Monitors whether voltage is higher or lower than V_{det1}	LVD2SR.MON flag: Monitors whether voltage is higher or lower than V_{det2}
			LVD1SR.DET flag: V_{det1} passage detection	LVD2SR.DET flag: V_{det2} passage detection
Process on voltage detection	Reset	Voltage monitor 0 reset	Voltage monitor 1 reset	Voltage monitor 2 reset
		Reset when V_{det0} > VCC CPU restart after specified time with VCC > V_{det0}	Reset when V_{det1} > VCC CPU restart timing selectable: after specified time with VCC > V_{det1} or V_{det1} > VCC	Reset when V_{det2} > VCC or the EXLVD pin CPU restart timing selectable: after specified time with either VCC or the EXLVD pin > V_{det2} or V_{det2} > VCC or the EXLVD pin
	Interrupt	No interrupt	Voltage monitor 1 interrupt	Voltage monitor 2 interrupt
			Non-maskable or maskable interrupt selectable	Non-maskable or maskable interrupt selectable
			Interrupt request issued when V_{det1} > VCC and VCC > V_{det1} or either	Interrupt request issued when V_{det2} > VCC or the EXLVD pin and VCC or the EXLVD pin > V_{det2} or either
Event link function		None	Available Output of event signals on detection of V_{det1} crossings	Available Output of event signals on detection of V_{det2} crossings
TrustZone Filter		—	Security attribution can be set for each registers	

Note 1. Input voltages to VCC and EXLVD pin can be switched using LVD2CMPCR.EXVCCINP2 bit.

Table 7.2 LVD_EXLVDVBAT, LVD_VRTC, and LVD_EXLVD specifications

Parameter		LVD_EXLVDVBAT	LVD_VRTC	LVD_EXLVD
Means for setting up operation		Registers	Registers	Registers
Target for monitoring		EXLVDVBAT pin input voltage	VRTC pin input voltage	EXLVD pin input voltage
Monitored voltage		$V_{det_lvdvbat}$	V_{det_vrtc}	V_{det_exlvd}
Detected event		Voltage rises or falls past $V_{det_lvdvbat}$	Voltage rises or falls past V_{det_vrtc}	Voltage rises or falls past V_{det_exlvd}
Detection voltage		Selectable from 7 different levels by using VBTLVDCR.LVL[2:0] bits	Selectable from 8 different levels by using VRTLVDCR.LVL[2:0] bits	Fixed
Monitoring flag		VBTLVDSR.MON flag: Monitors whether voltage is higher or lower than $V_{det_lvdvbat}$	VRTSR.MON flag: Monitors whether voltage is higher or lower than V_{det_vrtc}	EXLVDSR.MON flag: Monitors whether voltage is higher or lower than V_{det_exlvd}
		VBTLVDSR.DET flag: $V_{det_lvdvbat}$ passage detection	VRTSR.DET flag: V_{det_vrtc} passage detection	EXLVDSR.DET flag: V_{det_exlvd} passage detection
Process on voltage detection	Reset	Non-reset	Non-reset	Non-reset
	Interrupt	Voltage monitor lvdvbat interrupt	Voltage monitor vrtc interrupt	Voltage monitor exlvd interrupt
		Maskable interrupt selectable	Maskable interrupt selectable	Maskable interrupt selectable
		Interrupt request issued when $V_{det_lvdvbat}$ > EXLVDVBAT and EXLVDVBAT > $V_{det_lvdvbat}$ or either	Interrupt request issued when V_{det_vrtc} > VRTC and VRTC > V_{det_vrtc} or either	Interrupt request issued when V_{det_exlvd} > EXLVD and EXLVD > V_{det_exlvd} or either
Event link function		None	None	None
TrustZone Filter		Security attribution can be set for each registers		

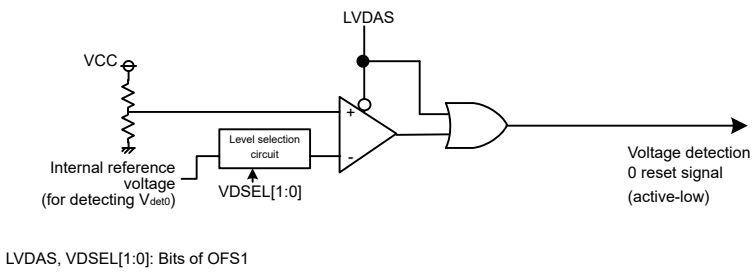

Figure 7.1 Block diagram of voltage monitor 0 reset generation circuit

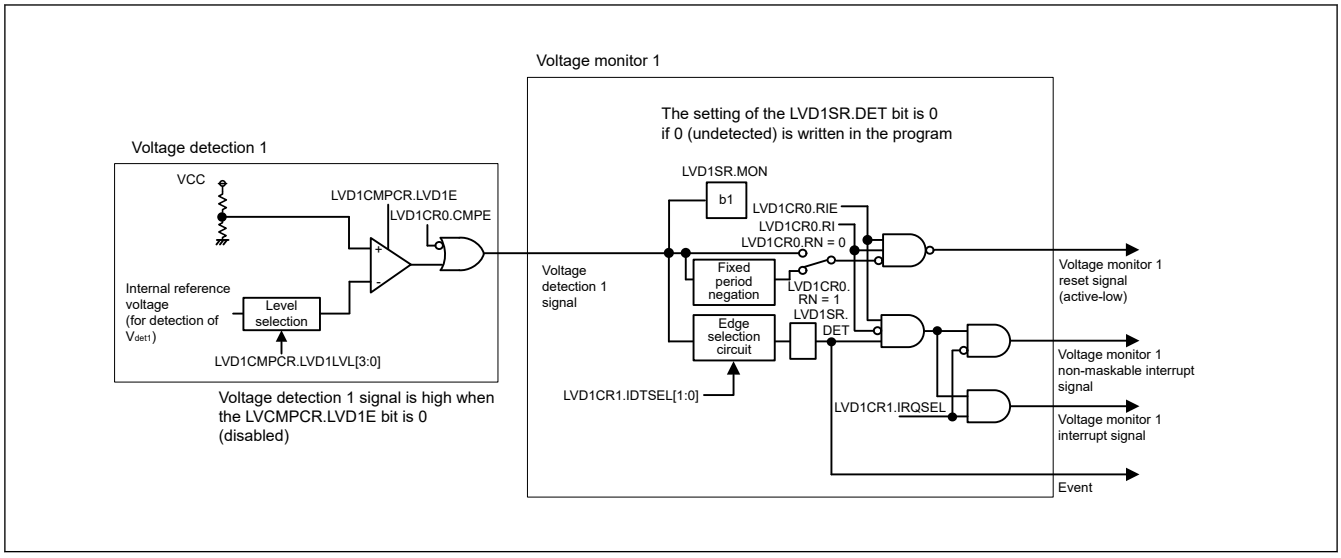

Figure 7.2 Block diagram of voltage monitor 1 interrupt and reset circuit

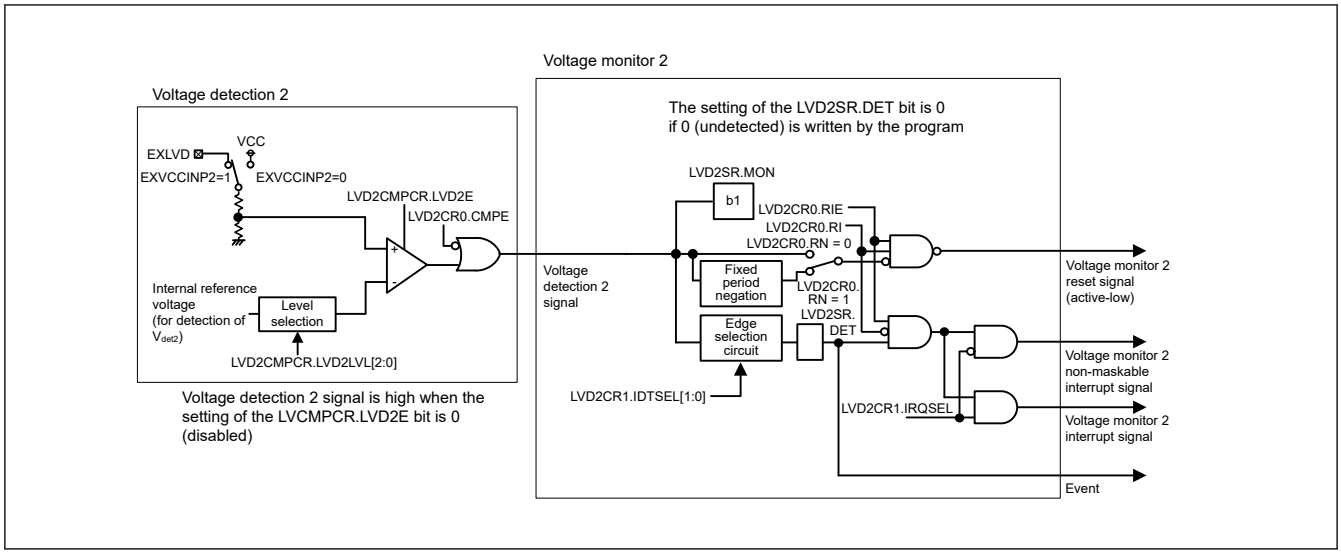

Figure 7.3 Block diagram of voltage monitor 2 interrupt and reset circuit

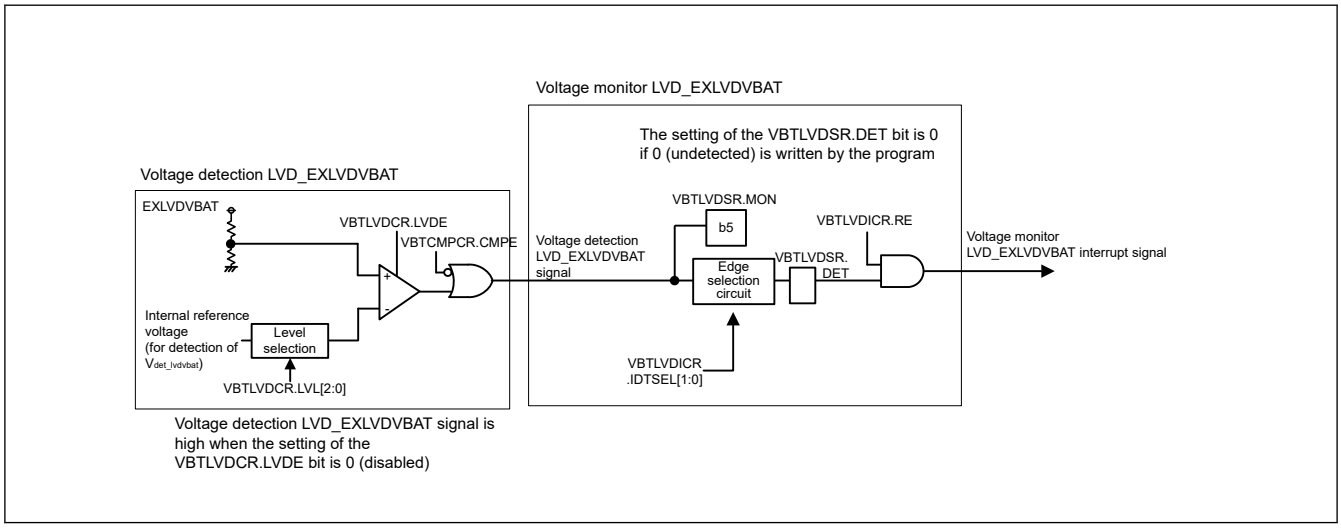

Figure 7.4 Block diagram of voltage monitor LVD_EXLVDVBAT interrupt circuit

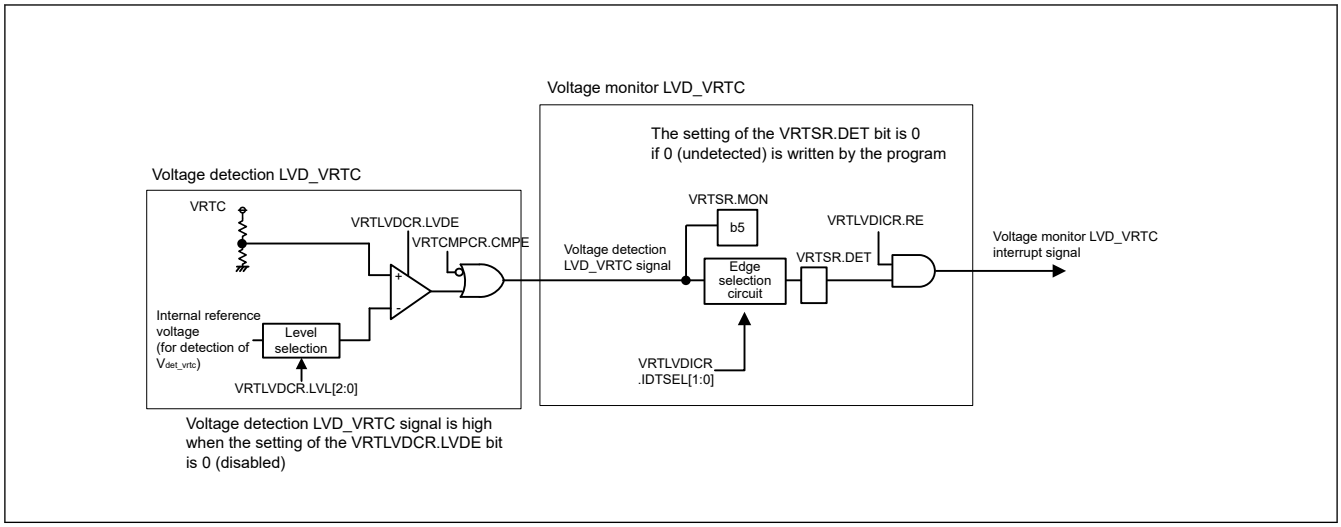

Figure 7.5 Block diagram of voltage monitor LVD_VRTC interrupt circuit

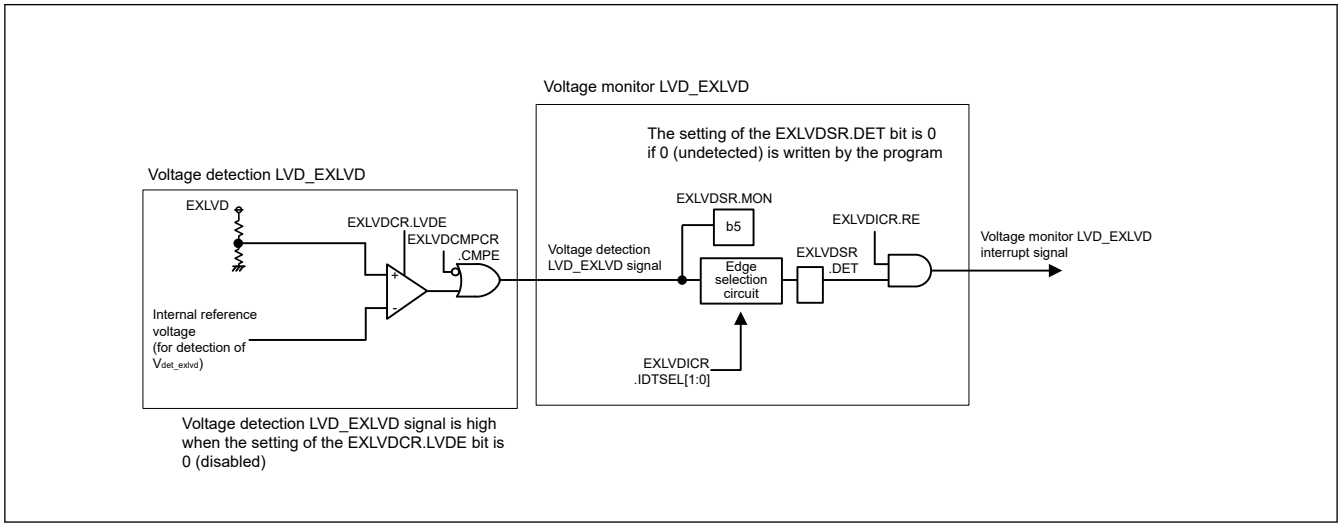

Figure 7.6 Block diagram of voltage monitor LVD_EXLVD interrupt circuit

Table 7.3 LVD input pin

Pin name	I/O	Description
EXLVDVBAT	Input	Detection target voltage pin for LVD_EXLVDVBAT
VRTC	Input	Detection target voltage pin for LVD_VRTC
EXLVD	Input	Detection target voltage pin for voltage detection 2 and LVD_EXLVD

7.2 Register Descriptions

7.2.1 LVDSAR : Low Voltage Detection Security Attribution Register

Base address: SYSC = 0x4001_E000

Offset address: 0x3CC

Bit position:	31	30	29	28	27	26	25	24	23	22	21	20	19	18	17	16
Bit field:	—	—	—	—	—	—	—	—	—	—	—	—	—	—	—	—
Value after reset:	1	1	1	1	1	1	1	1	1	1	1	1	1	1	1	1

Bit position:	15	14	13	12	11	10	9	8	7	6	5	4	3	2	1	0
Bit field:	—	—	—	—	—	NONSEC10	NONSEC9	NONSEC8	—	—	—	—	—	—	NONSEC1	NONSEC0
Value after reset:	1	1	1	1	1	1	1	1	1	1	1	1	1	1	1	1

Bit	Symbol	Function	R/W
0	NONSEC0	Non-secure Attribute bit 0 Target register: registers for LVD1 0: Secure 1: Non-secure	R/W
1	NONSEC1	Non-secure Attribute bit 1 Target register: registers for LVD2 0: Secure 1: Non-secure	R/W
7:2	—	These bits are read as 1. The write value must be 1 when it is possible to write.	R/W
8	NONSEC8	Non-secure Attribute bit 8 Target register: registers for LVD_EXLVDVBAT	R/W
9	NONSEC9	Non-secure Attribute bit 9 Target register: registers for LVD_VRTC	R/W
10	NONSEC10	Non-secure Attribute bit 10 Target register: registers for LVD_EXLVD	R/W
31:11	—	These bits are read as 1. The write value must be 1 when it is possible to write.	R/W

Note: Only Secure access can write to this register. Both Secure access and Non-secure read access are allowed but Non-secure write access is not allowed and TrustZone access error is not generated.

Note: This register is write-protected by PRCR register.

The LVDSAR register controls the secure attribute of LVD registers.

NONSEC0 bit (Non-secure Attribute bit 0)

This bit controls the security attribute of LVD1CMPCR, LVD1CR0, LVD1CR1, LVD1SR.

NONSEC1 bit (Non-secure Attribute bit 1)

This bit controls the security attribute of LVD2CMPCR, LVD2CR0, LVD2CR1, LVD2SR.

NONSEC8 bit (Non-secure Attribute bit 8)

This bit controls the security attribute of VBTLVDCR, VBTLVDSR, VBTCMPCR, VBTLVDICR.

NONSEC9 bit (Non-secure Attribute bit 9)

This bit controls the security attribute of VRTLVDCR, VRTSR, VRTCMPCR, VRTLVDICR.

NONSEC10 bit (Non-secure Attribute bit 10)

This bit controls the security attribute of EXLVDCR, EXLVDSR, EXLVDCMPCR, EXLVDICR.

7.2.2 LVD1CMPCR : Voltage Monitoring 1 Comparator Control Register

Base address: SYSC = 0x4001_E000

Offset address: 0x417

Bit position:	7	6	5	4	3	2	1	0
Bit field:	LVD1E	—	—	—	LVD1LVL[3:0]			
Value after reset:	0	0	0	0	1	0	1	1

Bit	Symbol	Function	R/W
3:0	LVD1LVL[3:0]	Voltage Detection 1 Level Select*1 0x00: Vdet1_0 0x01: Vdet1_1 0x02: Vdet1_2 0x03: Vdet1_3 0x04: Vdet1_4 0x05: Vdet1_5 0x06: Vdet1_6 0x07: Vdet1_7 0x08: Vdet1_8 0x09: Vdet1_9 0x0A: Vdet1_A 0x0B: Vdet1_B Others: Setting prohibited	R/W
6:4	—	These bits are read as 0. The write value should be 0.	R/W
7	LVD1E	Voltage Detection 1 Enable 0: Voltage detection 1 circuit disabled 1: Voltage detection 1 circuit enabled	R/W

Note: If the security attribution is configured as Secure:
- Secure access and Non-secure read access are allowed
- Non-secure write access is ignored, and TrustZone access error is not generated.

If the security attribution is configured as Non-secure:
- Secure and Non-secure access are allowed.

Note: Set the PRCR.PRC3 bit to 1 (write enabled) before rewriting this register.

Note 1. See section 43, Electrical Characteristics for the voltage levels to be detected. Keep the initial value if LVD1 is not used. When using LVD0, set the detection voltage of LVD1 higher than the detection voltage of LVD0. The LVD1LVL[3:0] bits can be rewritten only once after reset.

The LVD1CMPCR.LVD1LVL can be changed only if the LVD1CMPCR.LVD1E and LVD2CMPCR.LVD2E bits are both 0. The voltage detection circuits 1 and 2 should not be set at the same voltage detection level.

Do not change LVD1CMPCR.LVD1LVL and LVD1CMPCR.LVD1E at the same time.

LVD1E bit (Voltage Detection 1 Enable)

When using voltage detection 1 interrupt/reset or the LVD1SR.MON bit, set the LVD1E bit to 1. The voltage detection 1 circuit starts once $t_{d(E-A)}$ passes after the LVD1E bit value is changed from 0 to 1.

7.2.3 LVD2CMPCR : Voltage Monitoring 2 Comparator Control Register

Base address: SYSC = 0x4001_E000

Offset address: 0x418

Bit position:	7	6	5	4	3	2	1	0
Bit field:	LVD2E	EXVC CINP2	—	—	—	LVD2LVL[2:0]		
Value after reset:	0	0	0	0	0	1	1	1

Bit	Symbol	Function	R/W
2:0	LVD2LVL[2:0]	Voltage Detection 2 Level Select*1 0 0 0: Vdet2_0 0 0 1: Vdet2_1 0 1 0: Vdet2_2 0 1 1: Vdet2_3 1 0 0: Vdet2_4 1 0 1: Vdet2_5 1 1 0: Vdet2_6 1 1 1: Vdet2_7	R/W
5:3	—	These bits are read as 0. The write value should be 0.	R/W
6	EXVCCINP2	Voltage Detection 2 Comparison (Voltage external input select)*2 0: Power supply voltage (VCC) 1: EXLVD pin input voltage	R/W
7	LVD2E	Voltage Detection 2 Enable 0: Voltage detection 2 circuit disabled 1: Voltage detection 2 circuit enabled	R/W

Note: If the security attribution is configured as Secure:
- Secure access and Non-secure read access are allowed
- Non-secure write access is ignored, and TrustZone access error is not generated.

If the security attribution is configured as Non-secure:
- Secure and Non-secure access are allowed.

Note: Set the PRCR.PRC3 bit to 1 (write enabled) before rewriting this register.

Note 1. See section 43, Electrical Characteristics for the voltage levels to be detected. Keep the initial value if LVD2 is not used. When using LVD0, set the detection voltage of LVD2 higher than the detection voltage of LVD0. The LVD2LVL[2:0] bits can be rewritten only once after reset.

Note 2. EXVCCINP2 can only be changed if LVD1CMPCR.LVD1E bit and LVD2CMPCR.LVD2E bit are both 0.

The LVD2CMPCR.LVD2LVL[2:0] and LVD2CMPCR.EXVCCINP2 can be changed only if the LVD1CMPCR.LVD1E and LVD2CMPCR.LVD2E bits are both 0. The voltage detection circuits 1 and 2 should not be set at the same voltage detection level.

Do not change LVD2CMPCR.LVD2LVL and LVD2CMPCR.LVD2E at the same time.

LVD2E bit (Voltage Detection 2 Enable)

When using voltage detection 2 interrupt/reset or the LVD2SR.MON bit, set the LVD2E bit to 1. The voltage detection 2 circuit starts once $t_{d(E-A)}$ passes after the LVD2E bit value is changed from 0 to 1.

7.2.4 LVD1CR0 : Voltage Monitor 1 Circuit Control Register 0

Base address: SYSC = 0x4001_E000

Offset address: 0x41A

Bit position:	7	6	5	4	3	2	1	0
Bit field:	RN	RI	—	—	—	CMPE	—	RIE
Value after reset:	1	0	0	0	x	0	0	0

Bit	Symbol	Function	R/W
0	RIE	Voltage Monitor 1 Interrupt/Reset Enable 0: Disable 1: Enable	R/W
1	—	This bit is read as 0. The write value should be 0.	R/W
2	CMPE	Voltage Monitor 1 Circuit Comparison Result Output Enable 0: Disable voltage monitor 1 circuit comparison result output 1: Enable voltage monitor 1 circuit comparison result output	R/W
3	—	The read value is undefined. The write value should be 1.	R/W
5:4	—	These bits are read as 0. The write value should be 0.	R/W

Bit	Symbol	Function	R/W
6	RI	Voltage Monitor 1 Circuit Mode Select 0: Generate voltage monitor 1 interrupt on V_{det1} crossing 1: Enable voltage monitor 1 reset when the voltage falls to and below V_{det1}	R/W
7	RN	Voltage Monitor 1 Reset Negate Select 0: Negate after a stabilization time (t_{LVD1}) when VCC > V_{det1} is detected 1: Negate after a stabilization time (t_{LVD1}) on assertion of the LVD1 reset	R/W

Note: If the security attribution is configured as Secure:
- Secure access and Non-secure read access are allowed
- Non-secure write access is ignored, and TrustZone access error is not generated.

If the security attribution is configured as Non-secure:
- Secure and Non-secure access are allowed.

Note: Set the PRCR.PRC3 bit to 1 (write enabled) before rewriting this register.

RIE bit (Voltage Monitor 1 Interrupt/Reset Enable)

The RIE bit enables or disables voltage monitor 1 interrupt/reset. Ensure that neither a voltage monitor 1 interrupt nor a voltage monitor 1 reset is generated during programming or erasure of the flash memory.

CMPE bit (Voltage Monitor 1 Circuit Comparison Result Output Enable)

The CMPE bit enables or disables voltage monitor 1 circuit comparison result output. Set the CMPE bit to 1 after the voltage detection 1 circuit enables and stabilization time ($t_{d(E-A)}$) elapses. When stopping the voltage detection 1 circuit, disable the voltage detection 1 circuit after setting the CMPE bit is 0.

RN bit (Voltage Monitor 1 Reset Negate Select)

If the RN bit is set to 1 (negation follows a stabilization time on assertion of the LVD1 reset signal), set the MOCOCR.MCSTP bit to 0 (the MOCO operates). In addition, for a transition to Software Standby mode, the only possible value for the RN bit is 0 (negation follows stabilization time when VCC > V_{det1} is detected). Do not set the RN bit to 1 when this is the case.

7.2.5 LVD2CR0 : Voltage Monitor 2 Circuit Control Register 0

Base address: SYSC = 0x4001_E000

Offset address: 0x41B

Bit position:	7	6	5	4	3	2	1	0
Bit field:	RN	RI	—	—	—	CMPE	—	RIE
Value after reset:	1	0	0	0	x	0	0	0

Bit	Symbol	Function	R/W
0	RIE	Voltage Monitor 2 Interrupt/Reset Enable 0: Disable 1: Enable	R/W
1	—	This bit is read as 0. The write value should be 0.	R/W
2	CMPE	Voltage Monitor 2 Circuit Comparison Result Output Enable 0: Disable voltage monitor 2 circuit comparison result output 1: Enable voltage monitor 2 circuit comparison result output	R/W
3	—	The read value is undefined. The write value should be 1.	R/W
5:4	—	These bits are read as 0. The write value should be 0.	R/W
6	RI	Voltage Monitor 2 Circuit Mode Select 0: Generate voltage monitor 2 interrupt on V_{det2} crossing 1: Enable voltage monitor 2 reset when the voltage falls to and below V_{det2}	R/W

Bit	Symbol	Function	R/W
7	RN	Voltage Monitor 2 Reset Negate Select 0: Negate after a stabilization time (t_{LVD2}) when VCC or the EXLVD pin > V_{det2} is detected 1: Negate after a stabilization time (t_{LVD2}) on assertion of the LVD2 reset	R/W

Note: If the security attribution is configured as Secure:
- Secure access and Non-secure read access are allowed
- Non-secure write access is ignored, and TrustZone access error is not generated.

If the security attribution is configured as Non-secure:
- Secure and Non-secure access are allowed.

Note: Set the PRCR.PRC3 bit to 1 (write enabled) before rewriting this register.

RIE bit (Voltage Monitor 2 Interrupt/Reset Enable)

The RIE bit enables or disables the voltage monitor 2 interrupt/reset. Ensure that neither a voltage monitor 2 interrupt nor a voltage monitor 2 reset is generated during programming or erasure of the flash memory.

CMPE bit (Voltage Monitor 2 Circuit Comparison Result Output Enable)

The CMPE bit enables or disables voltage monitor 2 circuit comparison result output. Set the CMPE bit to 1 after the voltage detection 2 circuit enables and stabilization time ($t_{d(E-A)}$) elapses. When stopping the voltage detection 2 circuit, disable the voltage detection 2 circuit after setting the CMPE bit is 0.

RN bit (Voltage Monitor 2 Reset Negate Select)

If the RN bit is set to 1 (negating LVD2 reset in a specified time after its assertion), set the MOCOCR.MCSTP bit to 0 (the MOCO operates). Additionally, for a transition to Software Standby mode, the only possible value for the RN bit is 0 (negation follows a stabilization time when VCC or the EXLVD pin > V_{det2} is detected). Do not set the RN bit to 1 (negation follows a stabilization time after assertion of the LVD2 reset signal) when this is the case.

7.2.6 LVD1CR1 : Voltage Monitor 1 Circuit Control Register

Base address: SYSC = 0x4001_E000

Offset address: 0x0E0

Bit position:	7	6	5	4	3	2	1	0
Bit field:	—	—	—	—	—	IRQSEL	IDTSEL[1:0]	
Value after reset:	0	0	0	0	0	0	0	1

Bit	Symbol	Function	R/W
1:0	IDTSEL[1:0]	Voltage Monitor 1 Interrupt Generation Condition Select 0 0: When VCC ≥ V_{det1} (rise) is detected 0 1: When VCC < V_{det1} (fall) is detected 1 0: When fall or rise is detected 1 1: Settings prohibited	R/W
2	IRQSEL	Voltage Monitor 1 Interrupt Type Select 0: Non-maskable interrupt 1: Maskable interrupt*1	R/W
7:3	—	These bits are read as 0. The write value should be 0.	R/W

Note: If the security attribution is configured as Secure:
- Secure access and Non-secure read access are allowed
- Non-secure write access is ignored, and TrustZone access error is not generated.

If the security attribution is configured as Non-secure:
- Secure and Non-secure access are allowed.

Note: Set the PRCR.PRC3 bit to 1 (writing enabled) before rewriting this register.

Note 1. When enabling maskable interrupts, do not change the NMIER.LVD1EN bit value in the ICU from the reset state.

7.2.7 LVD1SR : Voltage Monitor 1 Circuit Status Register

Base address: SYSC = 0x4001_E000

Offset address: 0x0E1

Bit position:	7	6	5	4	3	2	1	0
Bit field:	—	—	—	—	—	—	MON	DET
Value after reset:	0	0	0	0	0	0	1	0

Bit	Symbol	Function	R/W
0	DET	Voltage Monitor 1 Voltage Variation Detection Flag 0: Not detected 1: V_{det1} crossing is detected	R/W*1
1	MON	Voltage Monitor 1 Signal Monitor Flag 0: VCC < V_{det1} 1: VCC ≥ V_{det1} or MON is disabled	R
7:2	—	These bits are read as 0. The write value should be 0.	R/W

Note: If the security attribution is configured as Secure:
- Secure access and Non-secure read access are allowed
- Non-secure write access is ignored, and TrustZone access error is not generated.

If the security attribution is configured as Non-secure:
- Secure and Non-secure access are allowed.

Note: Set the PRCR.PRC3 bit to 1 (write enabled) before rewriting this register.

Note 1. Only 0 can be written to this bit. After writing 0 to this bit, 2 system clock cycles are required for the bit to be read as 0.

DET flag (Voltage Monitor 1 Voltage Variation Detection Flag)

The DET flag is enabled when the LVD1CMPCR.LVD1E bit is 1 (voltage detection 1 circuit enabled) and the LVD1CR0.CMPE bit is 1 (voltage monitor 1 circuit comparison result output enabled).

When detecting V_{det1}, set the DET flag to 0 after setting LVD1CR0.RIE is 0 (disabled). When setting LVD1CR0.RIE bit to 1 (enabled) after setting it to 0, wait for 2 or more PCLKB cycles which have elapsed.

MON flag (Voltage Monitor 1 Signal Monitor Flag)

The MON flag is enabled when the LVD1CMPCR.LVD1E bit is 1 (voltage detection 1 circuit enabled) and the LVD1CR0.CMPE bit is 1 (voltage monitor 1 circuit comparison result output enabled).

7.2.8 LVD2CR1 : Voltage Monitor 2 Circuit Control Register 1

Base address: SYSC = 0x4001_E000

Offset address: 0x0E2

Bit position:	7	6	5	4	3	2	1	0
Bit field:	—	—	—	—	—	IRQSEL	IDTSEL[1:0]	
Value after reset:	0	0	0	0	0	0	0	1

Bit	Symbol	Function	R/W
1:0	IDTSEL[1:0]	Voltage Monitor 2 Interrupt Generation Condition Select 0 0: When VCC or the EXLVD pin ≥ V_{det2} (rise) is detected 0 1: When VCC or the EXLVD pin < V_{det2} (fall) is detected 1 0: When fall or rise is detected 1 1: Settings prohibited	R/W
2	IRQSEL	Voltage Monitor 2 Interrupt Type Select 0: Non-maskable interrupt 1: Maskable interrupt*1	R/W
7:3	—	These bits are read as 0. The write value should be 0.	R/W

Note: If the security attribution is configured as Secure:
- Secure access and Non-secure read access are allowed
- Non-secure write access is ignored, and TrustZone access error is not generated.

If the security attribution is configured as Non-secure:
- Secure and Non-secure access are allowed.

Note: Set the PRCR.PRC3 bit to 1 (writing enabled) before rewriting this register.
Note 1. When enabling maskable interrupts, do not change the NMIER.LVD2EN bit value in the ICU from the reset state.

7.2.9 LVD2SR : Voltage Monitor 2 Circuit Status Register

Base address: SYSC = 0x4001_E000

Offset address: 0x0E3

Bit position:	7	6	5	4	3	2	1	0
Bit field:	—	—	—	—	—	—	MON	DET
Value after reset:	0	0	0	0	0	0	1	0

Bit	Symbol	Function	R/W
0	DET	Voltage Monitor 2 Voltage Variation Detection Flag 0: Not detected 1: V_{det2} crossing is detected	R/W*1
1	MON	Voltage Monitor 2 Signal Monitor Flag 0: VCC or the EXLVD pin < V_{det2} 1: VCC or the EXLVD pin ≥ V_{det2} or MON is disabled	R
7:2	—	These bits are read as 0. The write value should be 0.	R/W

Note: If the security attribution is configured as Secure:
- Secure access and Non-secure read access are allowed
- Non-secure write access is ignored, and TrustZone access error is not generated.

If the security attribution is configured as Non-secure:
- Secure and Non-secure access are allowed.

Note: Set the PRCR.PRC3 bit to 1 (write enabled) before rewriting this register.
Note 1. Only 0 can be written to this bit. After writing 0 to this bit, 2 system clock cycles are required for the bit to be read as 0.

DET flag (Voltage Monitor 2 Voltage Variation Detection Flag)

The DET flag is enabled when the LVD2CMPCR.LVD2E bit is 1 (voltage detection 2 circuit enabled) and the LVD2CR0.CMPE bit is 1 (voltage monitor 2 circuit comparison result output enabled).

When detecting V_{det2}, set the DET flag to 0 after setting LVD2CR0.RIE is 0 (disabled). When setting LVD2CR0.RIE bit to 1 (enabled) after setting it to 0, wait for 2 or more PCLKB cycles which have elapsed.

MON flag (Voltage Monitor 2 Signal Monitor Flag)

The MON flag is enabled when the LVD2CMPCR.LVD2E bit is 1 (voltage detection 2 circuit enabled) and the LVD2CR0.CMPE bit is 1 (voltage monitor 2 circuit comparison result output enabled).

7.2.10 VBTLVDCR : EXLVDVBAT Circuit Control Register

Base address: SYSC = 0x4001_E000

Offset address: 0x4C0

Bit position:	7	6	5	4	3	2	1	0
Bit field:	LVL[2:0]			LVDE	—	—	—	—
Value after reset:	0	0	0	0	0	0	0	0

Bit	Symbol	Function	R/W
3:0	—	These bits are read as 0. The write value should be 0.	R/W

Bit	Symbol	Function	R/W
4	LVDE	EXLVDVBAT Pin Low Voltage Detect Enable 0: EXLVDVBAT pin low voltage detection disabled 1: EXLVDVBAT pin low voltage detection enabled	R/W
7:5	LVL[2:0]	EXLVDVBAT Pin Low Voltage Detect Level Select*1 0 0 0: $V_{LVDVBAT0}$ 0 0 1: $V_{LVDVBAT1}$ 0 1 0: $V_{LVDVBAT2}$ 0 1 1: $V_{LVDVBAT3}$ 1 0 0: $V_{LVDVBAT4}$ 1 0 1: $V_{LVDVBAT5}$ 1 1 0: $V_{LVDVBAT6}$ 1 1 1: Setting prohibited	R/W

Note: If the security attribution is configured as Secure:
- Secure access and Non-secure read access are allowed
- Non-secure write access is ignored, and TrustZone access error is not generated.

If the security attribution is configured as Non-secure:
- Secure and Non-secure access are allowed.

Note: Set the PRCR.PRC3 bit to 1 (write enabled) before rewriting this register.
Note 1. See section 43, Electrical Characteristics for the voltage levels to be detected.

LVDE bit (EXLVDVBAT Pin Low Voltage Detect Enable)

The LVDE bit controls the EXLVDVBAT pin low voltage detection.

LVL[2:0] bits (EXLVDVBAT Pin Low Voltage Detect Level Select)

The LVL[2:0] bits select the EXLVDVBAT pin low voltage detection level.

7.2.11 VBTLVDSR : EXLVDVBAT Circuit Status Register

Base address: SYSC = 0x4001_E000

Offset address: 0x4C1

Bit position:	7	6	5	4	3	2	1	0
Bit field:	—	—	MON	—	—	—	DET	—
Value after reset:	0	0	1	0	0	0	0	0

Bit	Symbol	Function	R/W
0	—	This bit is read as 0. The write value should be 0.	R/W
1	DET	EXLVDVBAT Pin Low Voltage Detect Flag*1*2 0: EXLVDVBAT pin low voltage not detected 1: EXLVDVBAT pin low voltage detected	R/W
4:2	—	These bits are read as 0. The write value should be 0.	R/W
5	MON	EXLVDVBAT Pin Low Voltage Monitor Flag 0: EXLVDVBAT < $V_{det_lvdvbat}$ 1: EXLVDVBAT ≥ $V_{det_lvdvbat}$ or MON flag is disabled	R
7:6	—	These bits are read as 0. The write value should be 0.	R/W

Note: If the security attribution is configured as Secure:
- Secure access and Non-secure read access are allowed
- Non-secure write access is ignored, and TrustZone access error is not generated.

If the security attribution is configured as Non-secure:
- Secure and Non-secure access are allowed.

Note: Set the PRCR.PRC3 bit to 1 (write enabled) before rewriting this register.
Note 1. Only 0 can be written after reading 1.
Note 2. This flag is only valid when VBTLVDCR.LVDE bit is 1. If VBTLVDCR.LVDE bit is 0, this flag is read as 0.

DET flag (EXLVDVBAT Pin Low Voltage Detect Flag)

The DET flag indicates that EXLVDVBAT pin low voltage detection occurs.

The DET flag should be set to 0 after VBTLVDICR.IE is set to 0 (disabled).

MON flag (EXLVDVBAT Pin Low Voltage Monitor Flag)

The MON flag is enabled when VBTLVDCR.LVDE bit is 1 (EXLVDVBAT pin low voltage detection circuit enabled) and VBTCMPCR.CMPE bit is 1 (EXLVDVBAT pin low voltage detect circuit comparison result output enabled).

7.2.12 VBTCMPCR : EXLVDVBAT Comparator Control Register

Base address: SYSC = 0x4001_E000

Offset address: 0x4C2

Bit position:	7	6	5	4	3	2	1	0
Bit field:	—	—	—	—	—	—	—	CMPE
Value after reset:	0	0	0	0	0	0	0	0

Bit	Symbol	Function	R/W
0	CMPE	EXLVDVBAT Pin Low Voltage Detect Circuit Output Enable 0: EXLVDVBAT pin low voltage detect circuit output disabled 1: EXLVDVBAT pin low voltage detect circuit output enabled	R/W
7:1	—	These bits are read as 0. The write value should be 0.	R/W

Note: If the security attribution is configured as Secure:
- Secure access and Non-secure read access are allowed
- Non-secure write access is ignored, and TrustZone access error is not generated.

If the security attribution is configured as Non-secure:
- Secure and Non-secure access are allowed.

Note: Set the PRCR.PRC3 bit to 1 (write enabled) before rewriting this register.

CMPE bit (EXLVDVBAT Pin Low Voltage Detect Circuit Output Enable)

The CMPE bit controls the EXLVDVBAT pin low voltage detection circuit output.

7.2.13 VBTLVDICR : EXLVDVBAT Pin Low Voltage Detect Interrupt Control Register

Base address: SYSC = 0x4001_E000

Offset address: 0x4C3

Bit position:	7	6	5	4	3	2	1	0
Bit field:	—	—	IDTSEL[1:0]		—	—	—	IE
Value after reset:	0	0	0	1	0	0	0	0

Bit	Symbol	Function	R/W
0	IE	EXLVDVBAT Pin Low Voltage Detect Interrupt Enable 0: EXLVDVBAT pin low voltage detection interrupt disabled 1: EXLVDVBAT pin low voltage detection interrupt enabled	R/W
3:1	—	These bits are read as 0. The write value should be 0.	R/W
5:4	IDTSEL[1:0]	EXLVDVBAT Pin Low Voltage Detect Interrupt Generation Condition Select 0 0: When EXLVDVBAT ≥ $V_{det_lvdvbat}$ (rise) is detected 0 1: When EXLVDVBAT < $V_{det_lvdvbat}$ (fall) is detected 1 0: When fall or rise is detected 1 1: Settings prohibited	R/W
7:6	—	These bits are read as 0. The write value should be 0.	R/W

Note: If the security attribution is configured as Secure:
- Secure access and Non-secure read access are allowed
- Non-secure write access is ignored, and TrustZone access error is not generated.

If the security attribution is configured as Non-secure:
- Secure and Non-secure access are allowed.

Note: Set the PRCR.PRC3 bit to 1 (write enabled) before rewriting this register.

7.2.14 VRTLVDCR : VRTC Low Voltage Detect Circuit Control Register

Base address: SYSC = 0x4001_E000

Offset address: 0x4C4

Bit position:	7	6	5	4	3	2	1	0
Bit field:	LVL[2:0]			LVDE	—	—	—	—
Value after reset:	0	1	0	0	0	0	0	0

Bit	Symbol	Function	R/W
3:0	—	These bits are read as 0. The write value should be 0.	R/W
4	LVDE	VRTC Pin Low Voltage Detect Enable 0: VRTC pin low voltage detection disabled 1: VRTC pin low voltage detection enabled	R/W
7:5	LVL[2:0]	VRTC Pin Low Voltage Detect Level Select*1 0 0 0: $V_{LVDVRTC0}$ 0 0 1: $V_{LVDVRTC1}$ 0 1 0: $V_{LVDVRTC2}$ 0 1 1: $V_{LVDVRTC3}$ 1 0 0: $V_{LVDVRTC4}$ 1 0 1: $V_{LVDVRTC5}$ 1 1 0: $V_{LVDVRTC6}$ 1 1 1: $V_{LVDVRTC7}$	R/W

Note: If the security attribution is configured as Secure:
- Secure access and Non-secure read access are allowed
- Non-secure write access is ignored, and TrustZone access error is not generated.

If the security attribution is configured as Non-secure:
- Secure and Non-secure access are allowed.

Note: Set the PRCR.PRC3 bit to 1 (write enabled) before rewriting this register.

Note 1. See section 43, Electrical Characteristics for the voltage levels to be detected.

LVDE bit (VRTC Pin Low Voltage Detect Enable)

The LVDE bit controls the VRTC pin low voltage detection.

LVL[2:0] bits (VRTC Pin Low Voltage Detect Level Select)

The LVL[2:0] bits select the VRTC pin low voltage detection level.

In the case of change from “011 to 111” to “000 to 001”, direct change is prohibited. Please follow next procedure.

1. Stop the VRTC pin low voltage detection
2. Set VRTLVDCR.LVL[2:0] = 010
3. Wait 300 µs
4. Set a value in VRTLVDCR.LVL[2:0]
5. Enable the VRTC pin low voltage detection
6. Wait for the VRTC comparator operation stabilization time (td_lvdvrtc) as described in section 43, Electrical Characteristics

In other cases, direct change is allowed. Please follow next procedure.

1. Stop the VRTC pin low voltage detection
2. Set a value in VRTLVDCR.LVL[2:0]
3. Enable the VRTC pin low voltage detection
4. Wait for the VRTC comparator operation stabilization time (td_lvdvrtc) as described in section 43, Electrical Characteristics

See section 7.8. VRTC Pin Low Voltage Detection Procedures, for how to stop and enable the VRTC pin low voltage detection.

Table 7.4 shows allowed/prohibited cases of VRTC pin low voltage detection level change.

Table 7.4 Allowed/Prohibited cases of VRTC pin low voltage detection level change

<table>
<tr><th colspan="2" rowspan="2"></th><th colspan="8">To</th></tr>
<tr><th>000</th><th>001</th><th>010</th><th>011</th><th>100</th><th>101</th><th>110</th><th>111</th></tr>
<tr><td rowspan="8">From</td><td>000</td><td colspan="8" rowspan="3">Allowed to change</td></tr>
<tr><td>001</td></tr>
<tr><td>010</td></tr>
<tr><td>011</td><td colspan="2" rowspan="5">Prohibited.
Please change to "010" first, and change “000” or “001” after 300 μs.</td><td colspan="6" rowspan="5">Allowed to change</td></tr>
<tr><td>100</td></tr>
<tr><td>101</td></tr>
<tr><td>110</td></tr>
<tr><td>111</td></tr>
</table>

7.2.15 VRTSR : VRTC Status Register

Base address: SYSC = 0x4001_E000

Offset address: 0x4C5

Bit position:	7	6	5	4	3	2	1	0
Bit field:	—	—	MON	VRTVLD	—	—	DET	PORDET
Value after reset:	0	0	1	0*4	0	0	0	1*1

Bit	Symbol	Function	R/W
0	PORDET	VRTC-domain Power-on Reset Detect Flag*2 0: VRTC-domain power-on reset not detected 1: VRTC-domain power-on reset detected	R/W
1	DET	VRTC Voltage Variation Detection Flag*2*3 0: V_{det_vrtc} crossing not detected 1: V_{det_vrtc} crossing detected	R/W
3:2	—	These bits are read as 0. The write value should be 0.	R/W
4	VRTVLD	VRTC-domain Valid 0: VRTC-domain area not valid 1: VRTC-domain area valid	R
5	MON	VRTC Signal Monitor Flag 0: VRTC < V_{det_vrtc} 1: VRTC ≥ V_{det_vrtc} or MON flag is disabled	R
7:6	—	These bits are read as 0. The write value should be 0.	R/W

Note: If the security attribution is configured as Secure:
- Secure access and Non-secure read access are allowed
- Non-secure write access is ignored, and TrustZone access error is not generated.

If the security attribution is configured as Non-secure:
- Secure and Non-secure access are allowed.

Note: Set the PRCR.PRC3 bit to 1 (write enabled) before rewriting this register.
Note 1. This flag is only set by VRTC-domain power-on reset.
Note 2. Only 0 can be written after reading 1.
Note 3. This flag is only valid when VRTLVDCR.LVDE bit is 1. If VRTLVDCR.LVDE bit is 0, this flag is read as 0.
Note 4. Depends on the VRTC voltage level.

PORDET flag (VRTC-domain Power-on Reset Detect Flag)

The PORDET flag indicates that VRTC-domain power-on reset occurs.

See section 41, Internal Voltage Regulator.

DET flag (VRTC Voltage Variation Detection Flag)

The DET flag indicates that VRTC pin low voltage detection occurs.

The DET flag should be set to 0 after VRTLVDICR.IE is set to 0 (disabled).

VRTVLD flag (VRTC-domain Valid)

The VRTVLD bit checks whether the VRTC-domain area is valid. The VRTVLD bit must be 1 before writing to or reading from the following registers:

- SOSCCR, SOMCR, and SOMRG described in section 8, Clock Generation Circuit
- VRTSR.PORDET bit described in this section
- All registers described in section 22, Realtime Clock (RTC)
- PCNTR2 and PmnPFS for XCIN/XCOUT described in section 18, I/O Ports

Also, access the above registers according to the flowchart below.

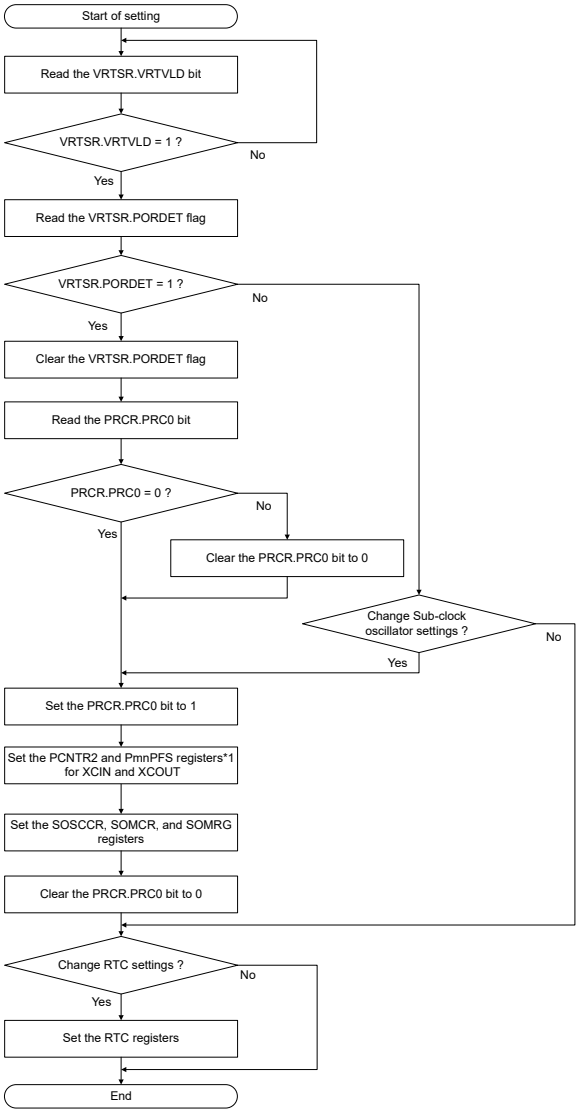

Note 1. See section 18, I/O Ports for register setting details.

Figure 7.7 Flowchart of accessing registers in the VRTC-domain area

See section 41, Internal Voltage Regulator.

MON flag (VRTC Signal Monitor Flag)

The MON flag is enabled when VRTLVDCR.LVDE bit is 1 (VRTC pin low voltage detection circuit enabled) and VRTCMPCR.CMPE bit is 1 (VRTC pin low voltage detect circuit comparison result output enabled).

7.2.16 VRTCMPCR : VRTC Comparator Control Register

Base address: SYSC = 0x4001_E000

Offset address: 0x4C6

Bit position:	7	6	5	4	3	2	1	0
Bit field:	—	—	—	—	—	—	—	CMPE
Value after reset:	0	0	0	0	0	0	0	0

Bit	Symbol	Function	R/W
0	CMPE	VRTC Pin Low Voltage Detect Circuit Output Enable 0: VRTC pin low voltage detect circuit output disabled 1: VRTC pin low voltage detect circuit output enabled	R/W
7:1	—	These bits are read as 0. The write value should be 0.	R/W

Note: If the security attribution is configured as Secure:
- Secure access and Non-secure read access are allowed
- Non-secure write access is ignored, and TrustZone access error is not generated.

If the security attribution is configured as Non-secure:
- Secure and Non-secure access are allowed.

Note: Set the PRCR.PRC3 bit to 1 (write enabled) before rewriting this register.

CMPE bit (VRTC Pin Low Voltage Detect Circuit Output Enable)

The CMPE bit controls the VRTC pin low voltage detection circuit output.

7.2.17 VRTLVDICR : VRTC Pin Low Voltage Detect Interrupt Control Register

Base address: SYSC = 0x4001_E000

Offset address: 0x4C7

Bit position:	7	6	5	4	3	2	1	0
Bit field:	—	—	IDTSEL[1:0]		—	—	—	IE
Value after reset:	0	0	0	1	0	0	0	0

Bit	Symbol	Function	R/W
0	IE	VRTC Pin Low Voltage Detect Interrupt Enable 0: VRTC pin low voltage detection interrupt disabled 1: VRTC pin low voltage detection interrupt enabled	R/W
3:1	—	These bits are read as 0. The write value should be 0.	R/W
5:4	IDTSEL[1:0]	VRTC Pin Low Voltage Detect Interrupt Generation Condition Select 0 0: When VRTC ≥ V_{det_vrtc} (rise) is detected 0 1: When VRTC < V_{det_vrtc} (fall) is detected 1 0: When fall or rise is detected 1 1: Settings prohibited	R/W
7:6	—	These bits are read as 0. The write value should be 0.	R/W

Note: If the security attribution is configured as Secure:
- Secure access and Non-secure read access are allowed
- Non-secure write access is ignored, and TrustZone access error is not generated.

If the security attribution is configured as Non-secure:
- Secure and Non-secure access are allowed.

Note: Set the PRCR.PRC3 bit to 1 (write enabled) before rewriting this register.

7.2.18 EXLVDCR : EXLVD Circuit Control Register

Base address: SYSC = 0x4001_E000

Offset address: 0x4C8

Bit position:	7	6	5	4	3	2	1	0
Bit field:	—	—	—	LVDE	—	—	—	—
Value after reset:	0	0	0	0	0	0	0	0

Bit	Symbol	Function	R/W
3:0	—	These bits are read as 0. The write value should be 0.	R/W
4	LVDE	EXLVD Pin Low Voltage Detect Enable 0: EXLVD pin low voltage detection disabled 1: EXLVD pin low voltage detection enabled	R/W
7:5	—	These bits are read as 0. The write value should be 0.	R/W

Note: If the security attribution is configured as Secure:
- Secure access and Non-secure read access are allowed
- Non-secure write access is ignored, and TrustZone access error is not generated.

If the security attribution is configured as Non-secure:
- Secure and Non-secure access are allowed.

Note: Set the PRCR.PRC3 bit to 1 (write enabled) before rewriting this register.

LVDE bit (EXLVD Pin Low Voltage Detect Enable)

The LVDE bit controls the EXLVD pin low voltage detection.

7.2.19 EXLVDSR : EXLVD Circuit Status Register

Base address: SYSC = 0x4001_E000

Offset address: 0x4C9

Bit position:	7	6	5	4	3	2	1	0
Bit field:	—	—	MON	—	—	—	DET	—
Value after reset:	0	0	1	0	0	0	0	0

Bit	Symbol	Function	R/W
0	—	This bit is read as 0. The write value should be 0.	R/W
1	DET	EXLVD Pin Low Voltage Detect Flag*1*2 0: EXLVD pin low voltage not detected 1: EXLVD pin low voltage detected	R/W
4:2	—	These bits are read as 0. The write value should be 0.	R/W
5	MON	EXLVD Pin Low Voltage Monitor Flag 0: EXLVD < V_{det_exlvd} 1: EXLVD ≥ V_{det_exlvd} or MON flag is disabled	R
7:6	—	These bits are read as 0. The write value should be 0.	R/W

Note: If the security attribution is configured as Secure:
- Secure access and Non-secure read access are allowed
- Non-secure write access is ignored, and TrustZone access error is not generated.

If the security attribution is configured as Non-secure:
- Secure and Non-secure access are allowed.

Note: Set the PRCR.PRC3 bit to 1 (write enabled) before rewriting this register.

Note 1. Only 0 can be written after reading 1.

Note 2. This flag is only valid when EXLVDCR.LVDE bit is 1. If EXLVDCR.LVDE bit is 0, this flag is read as 0.

DET flag (EXLVD Pin Low Voltage Detect Flag)

The DET flag indicates that EXLVD pin low voltage detection occurs.

The DET flag should be set to 0 after EXLVDICR.IE is set to 0 (disabled).

MON flag (EXLVD Pin Low Voltage Monitor Flag)

The MON flag is enabled when EXLVDCR.LVDE bit is 1 (EXLVD pin low voltage detection circuit enabled) and EXLVDCMPCR.CMPE bit is 1 (EXLVD pin low voltage detect circuit comparison result output enabled).

7.2.20 EXLVDCMPCR : EXLVD Comparator Control Register

Base address: SYSC = 0x4001_E000

Offset address: 0x4CA

Bit position:	7	6	5	4	3	2	1	0
Bit field:	—	—	—	—	—	—	—	CMPE
Value after reset:	0	0	0	0	0	0	0	0

Bit	Symbol	Function	R/W
0	CMPE	EXLVD Pin Low Voltage Detect Circuit Output Enable 0: EXLVD pin low voltage detect circuit output disabled 1: EXLVD pin low voltage detect circuit output enabled	R/W
7:1	—	These bits are read as 0. The write value should be 0.	R/W

Note: If the security attribution is configured as Secure:
- Secure access and Non-secure read access are allowed
- Non-secure write access is ignored, and TrustZone access error is not generated.

If the security attribution is configured as Non-secure:
- Secure and Non-secure access are allowed.

Note: Set the PRCR.PRC3 bit to 1 (write enabled) before rewriting this register.

CMPE bit (EXLVD Pin Low Voltage Detect Circuit Output Enable)

The CMPE bit controls the EXLVD pin low voltage detection circuit output.

7.2.21 EXLVDICR : EXLVD Pin Low Voltage Detect Interrupt Control Register

Base address: SYSC = 0x4001_E000

Offset address: 0x4CB

Bit position:	7	6	5	4	3	2	1	0
Bit field:	—	—	IDTSEL[1:0]		—	—	—	IE
Value after reset:	0	0	0	1	0	0	0	0

Bit	Symbol	Function	R/W
0	IE	EXLVD Pin Low Voltage Detect Interrupt Enable 0: EXLVD pin low voltage detection interrupt disabled 1: EXLVD pin low voltage detection interrupt enabled	R/W
3:1	—	These bits are read as 0. The write value should be 0.	R/W
5:4	IDTSEL[1:0]	EXLVD Pin Low Voltage Detect Interrupt Generation Condition Select 0 0: When EXLVD ≥ V_{det_exlvd} (rise) is detected 0 1: When EXLVD < V_{det_exlvd} (fall) is detected 1 0: When fall or rise is detected 1 1: Settings prohibited	R/W
7:6	—	These bits are read as 0. The write value should be 0.	R/W

Note: If the security attribution is configured as Secure:
- Secure access and Non-secure read access are allowed
- Non-secure write access is ignored, and TrustZone access error is not generated.

If the security attribution is configured as Non-secure:
- Secure and Non-secure access are allowed.

Note: Set the PRCR.PRC3 bit to 1 (write enabled) before rewriting this register.

7.3 VCC Input Voltage Monitor

7.3.1 Monitoring V_{det0}

The comparison results from voltage monitor 0 are not available for reading.

7.3.2 Monitoring V_{det1}

Table 7.5 shows the procedures to set up monitoring against V_{det1}. After the settings are complete, the comparison results from voltage monitor 1 can be monitored with the LVD1SR.MON flag.

Table 7.5 Procedures to set up monitoring against V_{det1}

Step		Monitoring the comparison results from voltage monitor 1
Setting up the voltage detection 1 circuit	1	Set LVD1CMPCR.LVD1E = 0 to disable voltage detection 1 before writing to the LVD1CMPCR.LVD1LVL[3:0] bits.
	2	Select the detection voltage in the LVD1CMPCR.LVD1LVL[3:0] bits.
	3	Set LVD1CMPCR.LVD1E = 1 to enable the voltage detection 1 circuit.
	4	Wait for at least $t_{d\ (E\text{-}A)}$ for the LVD1 operation stabilization time after LVD1 is enabled.
Enabling output	5	Set LVD1CR0.CMPE = 1 to enable output of the comparison results from voltage monitor 1.

7.3.3 Monitoring V_{det2}

Table 7.6 shows the procedures to set up monitoring against V_{det2}. After the settings are complete, the comparison results from voltage monitor 2 can be monitored in the LVD2SR.MON flag.

Table 7.6 Procedures to set up monitoring against V_{det2}

Step		Monitoring the results of comparison by voltage monitor 2
Setting up the voltage detection 2 circuit	1	Set LVD2CMPCR.LVD2E = 0 to disable voltage detection 2 before writing to the LVD2CMPCR.LVD2LVL[2:0] bits.
	2	Select the detection voltage in the LVD2CMPCR.LVD2LVL[2:0] bits.
	3	Set LVD2CMPCR.EXVCCINP2 = 0 (VCC voltage) or 1 (EXLVD pin input voltage)
	4	Set LVD2CMPCR.LVD2E = 1 to enable the voltage detection 2 circuit.
	5	Wait for at least $t_{d\ (E\text{-}A)}$ for the LVD2 operation stabilization time after LVD2 is enabled.
Enabling output	6	Set LVD2CR0.CMPE = 1 to enable output of the comparison results from voltage monitor 2.

7.4 Reset from Voltage Monitor 0

When using the reset from voltage monitor 0, clear the OFS1.LVDAS bit to 0 to enable the voltage monitor 0 reset after a reset. However, at boot mode, the reset from voltage monitor 0 is disabled regardless of the value of the OFS1.LVDAS bit.

Figure 7.8 shows an example of operations for a voltage monitor 0 reset.

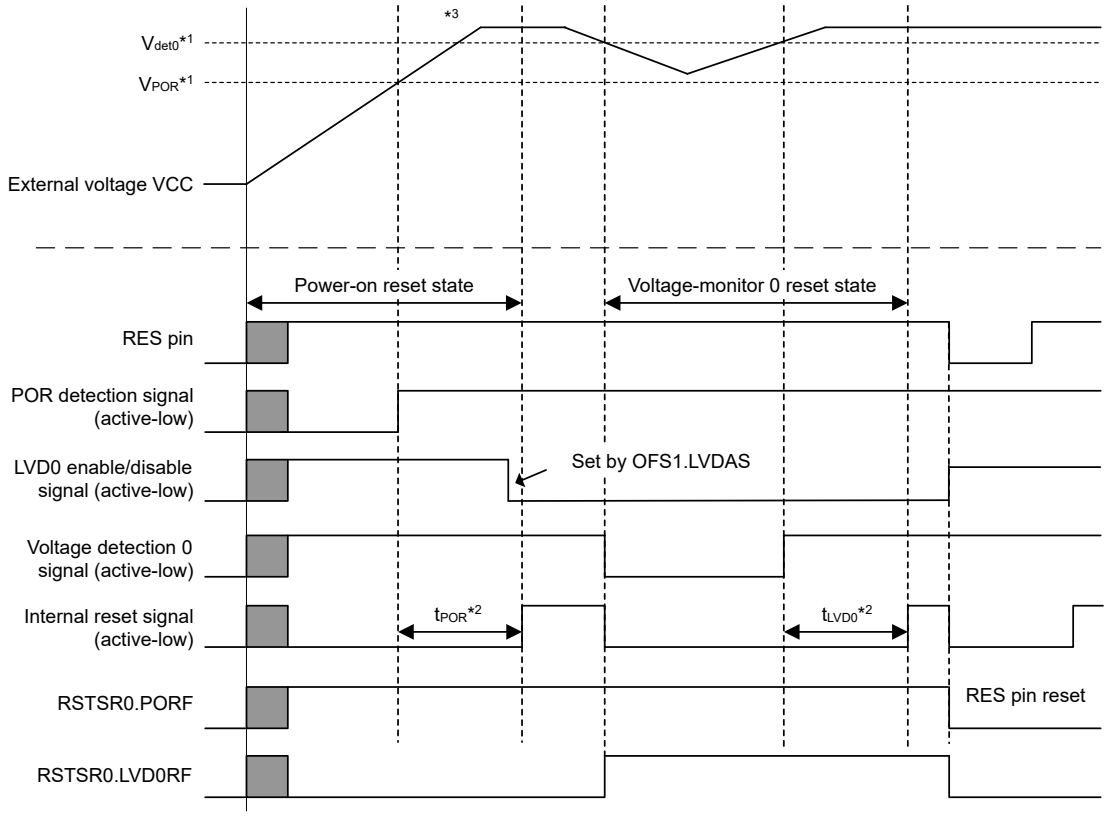

Note: For details of the electrical characteristics, see section 43, Electrical Characteristics.
Note 1. V_{POR} indicates the detection level for a power-on reset and V_{det0} indicates the detection level for a voltage monitor 0 reset.
Note 2. t_{POR}: the period until the power-on reset is released.
t_{LVD0}: the period until the LVD0 reset is released.
Note 3. At power-on, the POR reset is released after VCC has reached the minimum guaranteed voltage.

Figure 7.8 Example of voltage monitor 0 reset operation

7.5 Interrupt and Reset from Voltage Monitor 1

An interrupt or reset can be generated in response to the comparison results from the voltage monitor 1 circuit.

Table 7.7 shows the procedures for setting bits related to the voltage monitor 1 interrupt/reset so that voltage monitoring occurs. Table 7.8 shows the procedures for setting bits related to the voltage monitor 1 interrupt/reset so that voltage monitoring stops. Figure 7.9 shows an example of operations for a voltage monitor 1 interrupt. For the operation of the voltage monitor 1 reset, see Figure 5.2 in section 5, Resets.

When using the voltage monitor 1 circuit in Software Standby mode, set up the circuit using the procedures in this section.

(1) Setting in Software Standby mode

- When VCC > V_{det1} is detected, negate the voltage monitor 1 reset signal (LVD1CR0.RN = 0) following a stabilization time.

Table 7.7 Procedures for setting bits related to voltage monitor 1 interrupt and voltage monitor 1 reset so that voltage monitoring occurs

Step		Voltage monitor 1 interrupt (voltage monitor 1 ELC event output)	Voltage monitor 1 reset
Setting up the voltage detection 1 circuit	1	Set LVD1CMPCR.LVD1E = 0 to disable voltage detection 1 before writing to the LVD1CMPCR register.	
	2	Select the detection voltage in the LVD1CMPCR.LVD1LVL[3:0] bits.	
	3	Set LVD1CMPCR.LVD1E = 1 to enable the voltage detection 1 circuit.	
	4	Wait for at least $t_{d\ (E\text{-}A)}$ for the LVD1 operation stabilization time after LVD1 is enabled.	
Setting up the voltage monitor 1 interrupt or reset	5	Set LVD1CR0.RI = 0 to select the voltage monitor 1 interrupt.	• Set LVD1CR0.RI = 1 to select the voltage monitor 1 reset. • Select the type of reset negation in the LVD1CR0.RN bit.
	6	• Select the interrupt request condition in the LVD1CR1.IDTSEL[1:0] bits. • Select the interrupt type in the LVD1CR1.IRQSEL bit.	—
Enabling output	7	Set LVD1SR.DET = 0.	
	8	Set LVD1CR0.RIE = 1 to enable the voltage monitor 1 interrupt or reset.*1	
	9	Set LVD1CR0.CMPE = 1 to enable output of the comparison results from voltage monitor 1.	

Note: Steps 5 to 8 can be performed during the wait time in step 4. For details on $t_{d\ (E\text{-}A)}$, see section 43, Electrical Characteristics.
Note 1. Step 8 is not required if only the ELC event signal is to be output.

Table 7.8 Procedures for setting bits related to voltage monitor 1 interrupt and voltage monitor 1 reset so that voltage monitoring stops

Step		Voltage monitor 1 interrupt (voltage monitor 1 ELC event output), voltage monitor 1 reset
Stopping the enabling output	1	Set LVD1CR0.CMPE = 0 to disable output of the comparison results from voltage monitor 1.
	2	Set LVD1CR0.RIE = 0 to disable the voltage monitor 1 interrupt or reset.*1
Stopping the voltage detection 1 circuit	3	Set LVD1CMPCR.LVD1E = 0 to disable the voltage detection 1 circuit.

Note 1. Step 2 is not required if only the ELC event signal is to be output.

If the voltage monitor 1 interrupt or reset setting is to be made again after it is used and stopped once, you can omit the following steps in the procedures for stopping and setting, depending on the conditions:

- Setting the voltage detection 1 circuit is not required if the settings for the circuit do not change.
- Setting the voltage monitor 1 interrupt or reset is not required if the settings for the voltage monitor 1 interrupt or voltage monitor 1 reset do not change.

Figure 7.9 shows an example of the voltage monitor 1 interrupt operation.

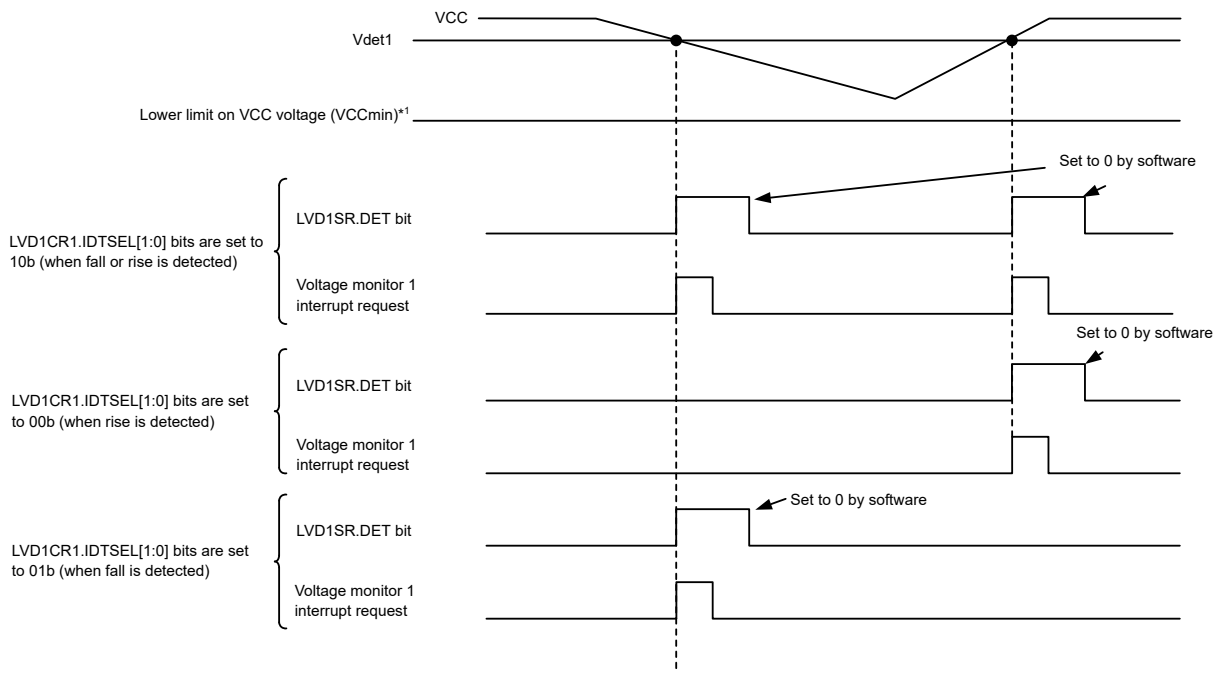

Note 1. When the voltage monitor 0 reset is not in use, use at VCC ≥ VCCmin.

Figure 7.9 Example of voltage monitor 1 interrupt operation

7.6 Interrupt and Reset from Voltage Monitor 2

An interrupt or reset can be generated in response to the comparison results from the voltage monitor 2 circuit.

Table 7.9 shows the procedures for setting bits related to the voltage monitor 2 interrupt/reset so that voltage monitoring occurs. Table 7.10 shows the procedures for setting bits related to the voltage monitor 2 interrupt/reset so that voltage monitoring stops. Figure 7.10 shows an example of operations for a voltage monitor 2 interrupt. For the operation of the voltage monitor 2 reset, see Figure 5.2 in section 5, Resets.

When using the voltage monitor 2 circuit in Software Standby mode, set up the circuit with the following procedures.

(1) Setting in Software Standby mode

- When VCC or the EXLVD pin > V_{det2} is detected, negate the voltage monitor 2 reset signal (LVD2CR0.RN = 0) following a LVD2 stabilization time.

Table 7.9 Procedures for setting bits related to voltage monitor 2 interrupt and voltage monitor 2 reset so that voltage monitoring occurs (1 of 2)

Step		Voltage monitor 2 interrupt (voltage monitor 2 ELC event output) / Voltage monitor 2 reset
Setting up the voltage detection 2 circuit	1	Set LVD2CMPCR.LVD2E = 0 to disable voltage detection 2 before writing to the LVD2CMPCR register.
	2	Select the detection voltage in the LVD2CMPCR.LVD2LVL[2:0] bits.
	3	Set LVD2CMPCR.EXVCCINP2 = 0 (VCC voltage) or 1 (EXLVD pin input voltage)
	4	Set LVD2CMPCR.LVD2E = 1 to enable the voltage detection 2 circuit.
	5	Wait for at least $t_{d\ (E\text{-}A)}$ for the LVD2 operation stabilization time after LVD2 is enabled.*1

Table 7.9 Procedures for setting bits related to voltage monitor 2 interrupt and voltage monitor 2 reset so that voltage monitoring occurs (2 of 2)

Step		Voltage monitor 2 interrupt (voltage monitor 2 ELC event output)	Voltage monitor 2 reset
Setting up the voltage monitor 2 interrupt or reset	6	Set LVD2CR0.RI = 0 to select the voltage monitor 2 interrupt.	• Set LVD2CR0.RI = 1 to select the voltage monitor 2 reset. • Select the type of reset negation in the LVD2CR0.RN bit.
	7	• Select the interrupt request condition in the LVD2CR1.IDTSEL[1:0] bits. • Select the interrupt type in the LVD2CR1.IRQSEL bit.	—
Enabling output	8	Set LVD2SR.DET = 0.	
	9	Set LVD2CR0.RIE = 1 to enable the voltage monitor 2 interrupt or reset.*2	
	10	Set LVD2CR0.CMPE = 1 to enable output of the comparison results from voltage monitor 2.	

Note 1. Steps 6 to 9 can be performed during the wait time in step 5. For details on $t_{d(E-A)}$, see section 43, Electrical Characteristics.
Note 2. Step 9 is not required if only the ELC event signal is to be output.

Table 7.10 Procedures for setting bits related to voltage monitor 2 interrupt and voltage monitor 2 reset so that voltage monitoring stops

Step		Voltage monitor 2 interrupt (voltage monitor 2 ELC event output), voltage monitor 2 reset
Settings to stop enabling output	1	Set LVD2CR0.CMPE = 0 to disable output of the comparison results from voltage monitor 2.
	2	Set LVD2CR0.RIE = 0 to disable the voltage monitor 2 interrupt or reset.*1
Stopping the voltage detection 2 circuit	3	Set LVD2CMPCR.LVD2E = 0 to disable the voltage detection 2 circuit.

Note 1. Step 2 is not required if only the ELC event signal is to be output.

If the voltage monitor 2 interrupt or reset setting is to be made again after it is used and stopped once, you can omit the following steps in the procedures for stopping and setting, depending on the conditions:

- Setting the voltage detection 2 is not required if the settings for the circuit do not change.
- Setting the voltage monitor 2 interrupt or reset is not required if the settings for the voltage monitor 2 interrupt or voltage monitor 2 reset do not change.

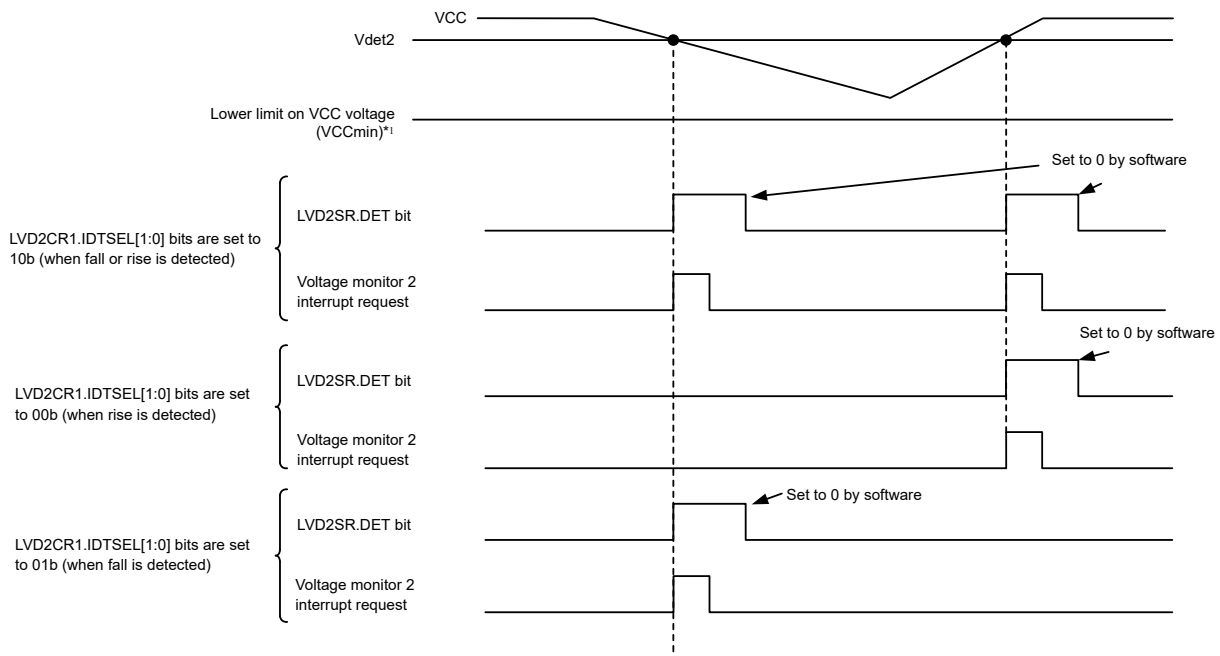

Note 1. When the voltage monitor 0 reset is not in use, use at VCC ≥ VCCmin.

Figure 7.10 Example of voltage monitor 2 interrupt operation

7.7 EXLVDVBAT Pin Low Voltage Detection Procedures

The VBTLVDSR.DET flag and interrupt can be used to monitor EXLVDVBAT pin low voltage detection using the procedures described in this section.

The following procedure shows how to enable the EXLVDVBAT pin low voltage detection:

1. Specify the detection voltage by setting VBTLVDCR.LVL[2:0] bits (EXLVDVBAT pin voltage detect level select).
2. Select the interrupt request timing in VBTLVDICR.IDTSEL[1:0] bits.
3. Set VBTLVDCR.LVDE bit to 1 to enable the EXLVDVBAT pin low voltage detection.
4. After waiting for the EXLVDVBAT comparator operation stabilization time (td_lvdvbat) as described in section 43, Electrical Characteristics, set VBTCMPCR.CMPE bit to 1 to enable the EXLVDVBAT pin voltage detect circuit.
5. Make sure that VBTLVDSR.DET flag is 0, and then set VBTLVDICR.IE bit to 1 to enable the EXLVDVBAT pin low voltage detection interrupt output.

Figure 7.11 shows an example of the voltage monitor LVD_EXLVDVBAT interrupt operation.

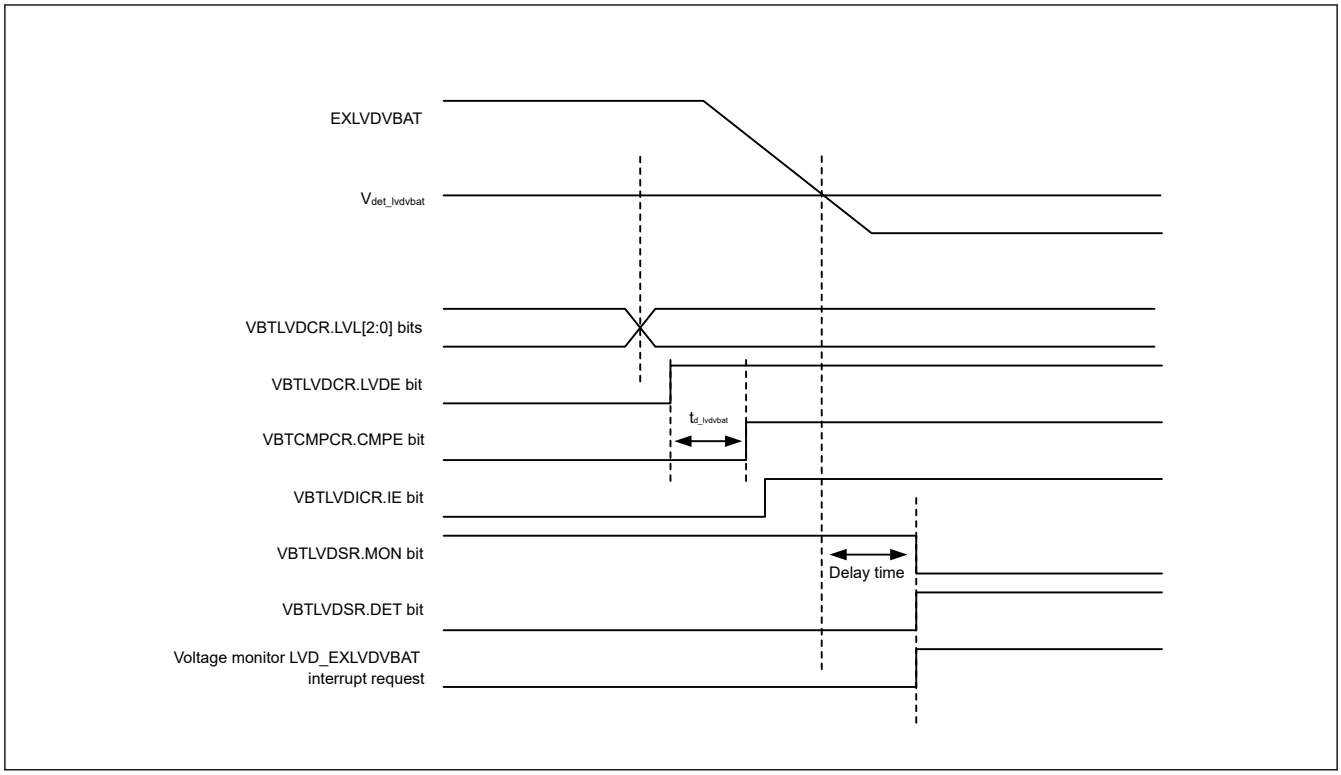

Figure 7.11 Basic operation of EXLVDVBAT pin low voltage detection ON

The following procedure shows how to reset the EXLVDVBAT pin low voltage detection:

1. Make sure that VBTLVDSR.DET bit is 1.
2. Set VBTLVDICR.IE bit to 0 to disable the voltage detect interrupt.
3. Set VBTLVDSR.DET bit to 0 to clear the interrupt detect flag.
4. Set VBTLVDICR.IE bit to 1 to enable the EXLVDVBAT pin low voltage detection interrupt output.

Figure 7.12 shows an example of how to reset the EXLVDVBAT pin low voltage detection.

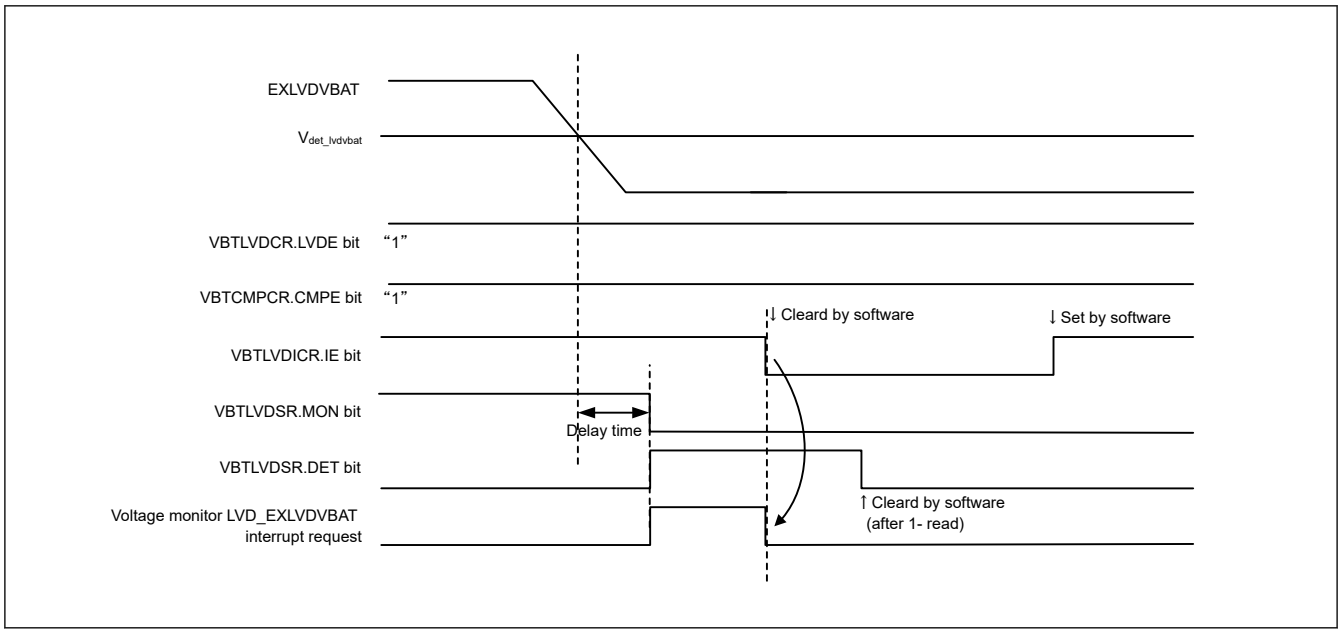

Figure 7.12 Procedures for reset the EXLVDVBAT pin low voltage detection

The following procedure shows how to stop the EXLVDVBAT pin low voltage detection:

1. Make sure that VBTLVDSR.DET bit is 0. If VBTLVDSR.DET bit is 1, set VBTLVDSR.DET bit to 0 to clear the interrupt detect flag.
2. Set VBTLVDICR.IE bit to 0 to disable the voltage detect interrupt.
3. Set VBTCMPCR.CMPE bit to 0 to disable the EXLVDVBAT pin voltage detect circuit output.
4. Set VBTLVDCR.LVDE bit to 0 to disable the EXLVDVBAT pin low voltage output.

7.8 VRTC Pin Low Voltage Detection Procedures

The VRTSR.DET flag and interrupt can be used to monitor VRTC pin low voltage detection using the procedures described in this section.

The following procedure shows how to enable the VRTC pin low voltage detection:

1. Specify the detection voltage by setting VRTLVDCR.LVL[2:0] bits (VRTC pin voltage detect level select).
2. Select the interrupt request timing in VRTLVDICR.IDTSEL[1:0] bits.
3. Set VRTLVDCR.LVDE bit to 1 to enable the VRTC pin low voltage detection.
4. After waiting for the VRTC comparator operation stabilization time (td_lvdvrtc) as described in section 43, Electrical Characteristics, set VRTCMPCR.CMPE bit to 1 to enable the VRTC pin voltage detect circuit.
5. Make sure that VRTSR.DET flag is 0, and then set VRTLVDICR.IE bit to 1 to enable the VRTC pin low voltage detection interrupt output.

Figure 7.13 shows an example of the voltage monitor LVD_VRTC interrupt operation.

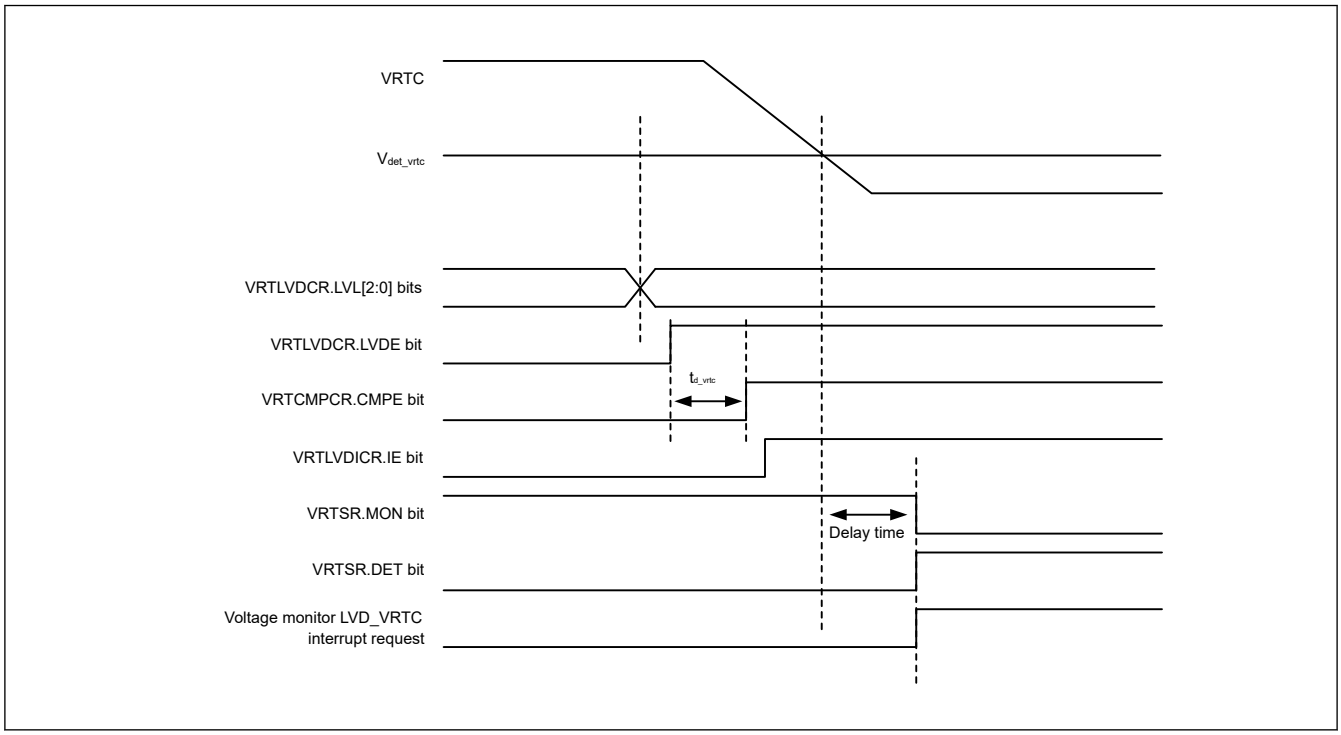

Figure 7.13 Basic operation of VRTC pin low voltage detection ON

The following procedure shows how to reset the VRTC pin low voltage detection:

1. Make sure that VRTSR.DET bit is 1.
2. Set VRTLVDICR.IE bit to 0 to disable the voltage detect interrupt.
3. Set VRTSR.DET bit to 0 to clear the interrupt detect flag.
4. Set VRTLVDICR.IE bit to 1 to enable the VRTC pin low voltage detection interrupt output.

Figure 7.14 shows an example of how to reset the VRTC pin low voltage detection.

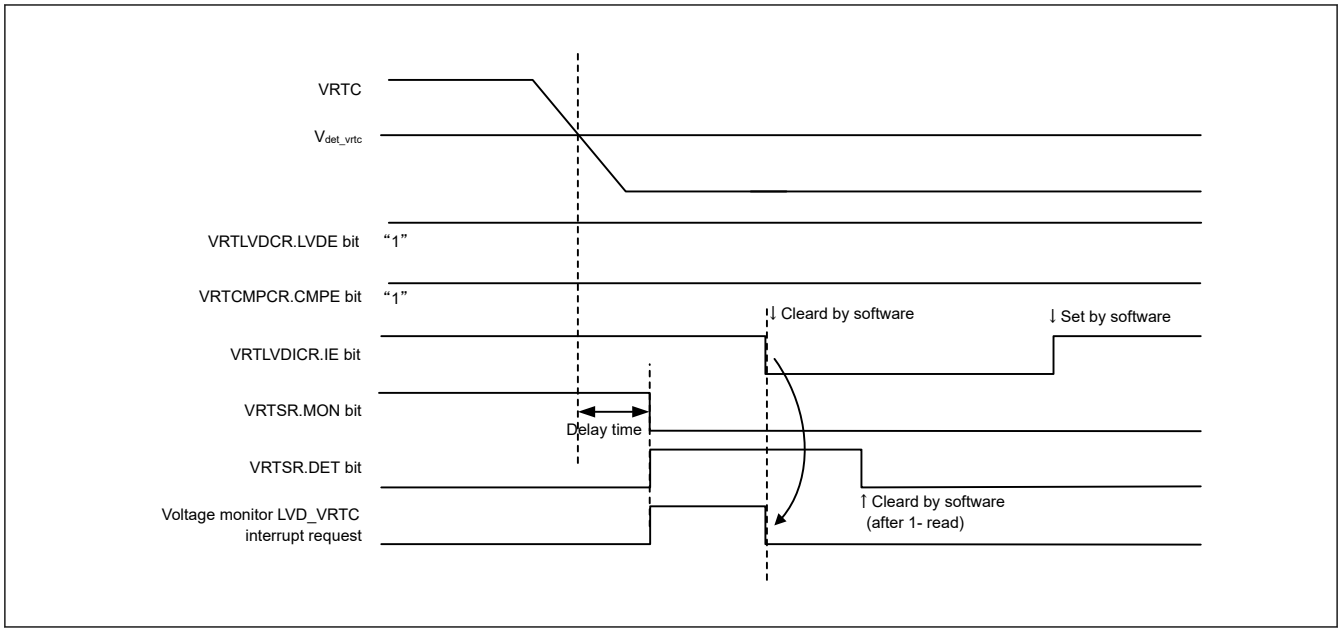

Figure 7.14 Procedures for reset the VRTC pin low voltage detection

The following procedure shows how to stop the VRTC pin low voltage detection:

1. Make sure that VRTSR.DET bit is 0. If VRTSR.DET bit is 1, set VRTSR.DET bit to 0 to clear the interrupt detect flag.
2. Set VRTLVDICR.IE bit to 0 to disable the voltage detect interrupt.
3. Set VRTCMPCR.CMPE bit to 0 to disable the VRTC pin voltage detect circuit output.
4. Set VRTLVDCR.LVDE bit to 0 to disable the VRTC pin low voltage output.

7.9 EXLVD Pin Low Voltage Detection Procedures

The EXLVDSR.DET flag and interrupt can be used to monitor EXLVD pin low voltage detection using the procedures described in this section.

The following procedure shows how to enable the EXLVD pin low voltage detection:

1. Select the interrupt request timing in EXLVDICR.IDTSEL[1:0] bits.
2. Set EXLVDCR.LVDE bit to 1 to enable the EXLVD pin low voltage detection.
3. After waiting for the EXLVD comparator operation stabilization time (td_exlvd) as described in section 43, Electrical Characteristics, set EXLVDCMPCR.CMPE bit to 1 to enable the EXLVD pin voltage detect circuit.
4. Make sure that EXLVDSR.DET flag is 0, and then set EXLVDICR.IE bit to 1 to enable the EXLVD pin low voltage detection interrupt output.

Figure 7.15 shows an example of the voltage monitor LVD_EXLVD interrupt operation.

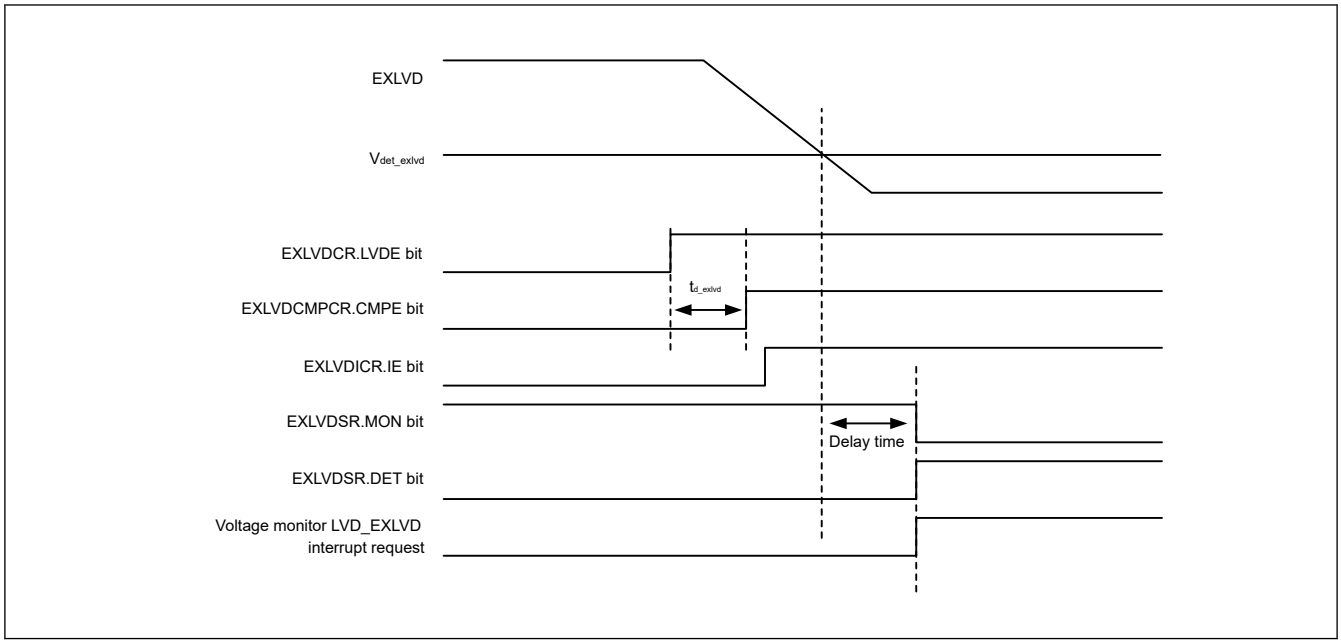

Figure 7.15 Basic operation of EXLVD pin low voltage detection ON

The following procedure shows how to reset the EXLVD pin low voltage detection:

1. Make sure that EXLVDSR.DET bit is 1.
2. Set EXLVDICR.IE bit to 0 to disable the voltage detect interrupt.
3. Set EXLVDSR.DET bit to 0 to clear the interrupt detect flag.
4. Set EXLVDICR.IE bit to 1 to enable the EXLVD pin low voltage detection interrupt output.

Figure 7.16 shows an example of how to reset the EXLVD pin low voltage detection.

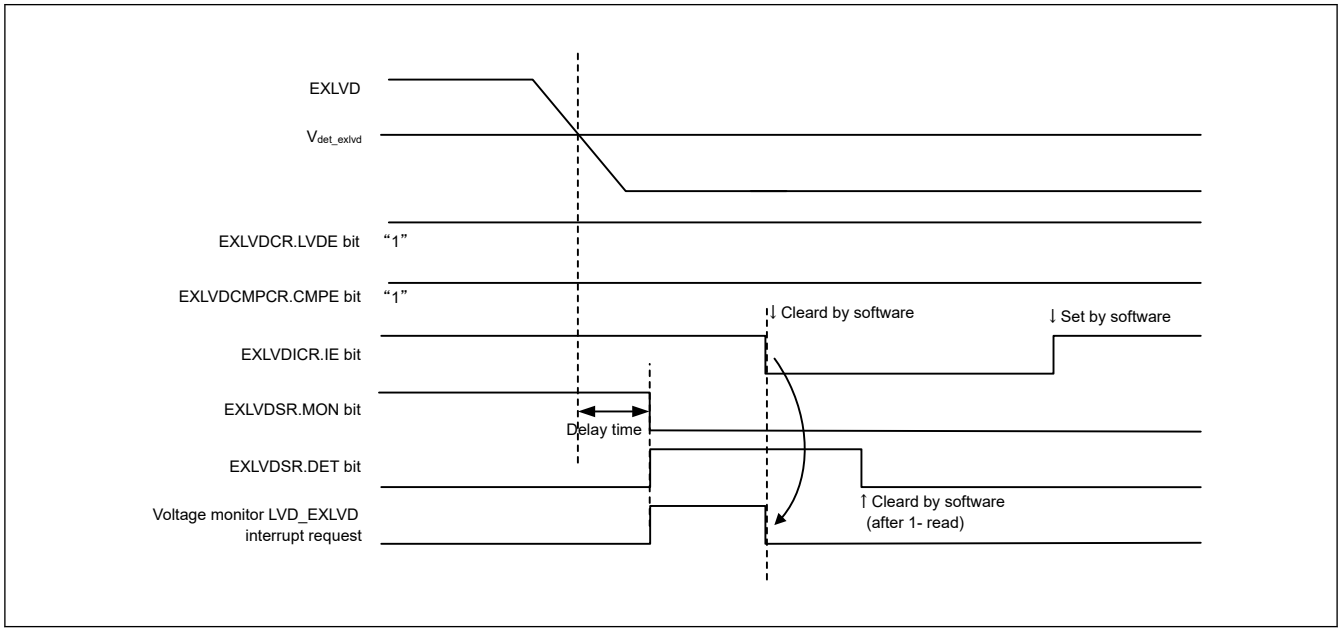

Figure 7.16 Procedures for reset the EXLVD pin low voltage detection

The following procedure shows how to stop the EXLVD pin low voltage detection:

1. Make sure that EXLVDSR.DET bit is 0. If EXLVDSR.DET bit is 1, set EXLVDSR.DET bit to 0 to clear the interrupt detect flag.
2. Set EXLVDICR.IE bit to 0 to disable the voltage detect interrupt.
3. Set EXLVDCMPCR.CMPE bit to 0 to disable the EXLVD pin voltage detect circuit output.

4. Set EXLVDCR.LVDE bit to 0 to disable the EXLVD pin low voltage output.

7.10 Event Link Controller (ELC) Output

The LVD can output the event signals to the Event Link Controller (ELC).

(1) V_{det1} Crossing Detection Event

The LVD outputs the event signal when it detects that the voltage has passed the V_{det1} voltage while both the voltage detection 1 circuit and the voltage monitor 1 circuit comparison result output are enabled.

(2) V_{det2} Crossing Detection Event

The LVD outputs the event signal when it detects that the voltage has passed the V_{det2} voltage while both the voltage detection 2 circuit and the voltage monitor 2 circuit comparison result output are enabled.

When enabling the event link output function of the LVD, you must enable the LVD before enabling the LVD event link function of the ELC. To stop the event link output function of the LVD, you must stop the LVD before disabling the LVD event link function of the ELC.

7.10.1 Interrupt Handling and Event Linking

The LVD provides bits to separately enable or disable the voltage monitor 1 and 2 interrupts. When an interrupt source is generated and the interrupt is enabled by the interrupt enable bit, the interrupt signal is output to the CPU.

In contrast, as soon as an interrupt source is generated, an event link signal is output as the event signal to the other module through the ELC, regardless of the state of the interrupt enable bit.

It is possible to output voltage monitor 1 and 2 interrupts in Software Standby mode. The event signals for the ELC in Software Standby mode are output as follows:

- When a V_{det1} or V_{det2} passage events is detected in Software Standby mode, event signals are not generated for the ELC because the clock is not supplied in Software Standby mode. Because the V_{det1} and V_{det2} passage detection flags are saved, when the clock supply resumes after returning from Software Standby mode, the event signals for the ELC are output based on the state of the V_{det1} and V_{det2} detection flags.

8. Clock Generation Circuit

8.1 Overview

The MCU provides a clock generation circuit. Table 8.1 and Table 8.2 list the clock generation circuit specifications. Figure 8.1 show a block diagram, and Table 8.3 lists the I/O pins.

Table 8.1 Clock generation circuit specifications for the clock sources

Clock source	Description	Specification
Main clock oscillator (MOSC)	Resonator frequency	1 MHz to 20 MHz
	External clock input frequency	Up to 20 MHz
	External resonator or additional circuit	Ceramic resonator, crystal
	Connection pins	EXTAL, XTAL
	Drive capability switching	Available
	Oscillation stop detection function	Available
Sub-clock oscillator (SOSC)	Resonator frequency	32.768 kHz
	External resonator or additional circuit	Crystal resonator
	Connection pins	XCIN, XCOUT
	External clock input	Available
	Drive capability switching	Available
	Oscillation stop detection function	Available
PLL circuit	Input clock source	MOSC, HOCO
	Input pulse frequency division ratio	Selectable from 1, 4, and 6
	Input frequency	4 MHz to 12.5 MHz
	Frequency multiplication ratio	Selectable from 4 to 15.5 (0.5 steps)
	Output pulse frequency division ratio	Unavailable
	PLL Output frequency	24 MHz to 80 MHz
PLL_RTC circuit	Input clock source	SOSC
	Input frequency	32.768 kHz
	Frequency multiplication ratio	793
	Output pulse frequency division ratio	Unavailable
	PLL output frequency	26 MHz
High-speed on-chip oscillator (HOCO)	Oscillation frequency	24/32/40/48/64/80 MHz
	FLL function	Unavailable
	User trimming	Available
Middle-speed on-chip oscillator (MOCO)	Oscillation frequency	8 MHz
	User trimming	Available
Low-speed on-chip oscillator (LOCO)	Oscillation frequency	32.768 kHz
	User trimming	Available
IWDT-dedicated on-chip oscillator (IWDTLOCO)	Oscillation frequency	15 kHz
	User trimming	Unavailable
External clock input for SWD (SWCLK)	Input clock frequency	Up to 12.5 MHz

Table 8.2 Clock generation circuit specifications for the internal clocks (1 of 2)

Item	Clock source	Clock supply	Specification
System clock (ICLK)	MOSC/SOSC/HOCO/MOCO/LOCO/PLL	CPU, DTC, DMAC, Flash, RAM, I/O ports	Up to 80 MHz Division ratio: 1/2/4/8/16/32/64
Peripheral module clock A (PCLKA)	MOSC/SOSC/HOCO/MOCO/LOCO/PLL	Peripheral modules (QSPI, SCI, SPI, CRC, DOC, ADC12, GPT bus clock, CNECC, IrDA)	Up to 80 MHz Division ratio: 1/2/4/8/16/32/64
Peripheral module clock B (PCLKB)	MOSC/SOSC/HOCO/MOCO/LOCO/PLL	Peripheral modules (CAC, ELC, POEG, RTC, WDT, IWDT, AGTW, IIC, CANFD, SLCDC, UARTA, RSIP-E31A)	Up to 40 MHz Division ratio: 1/2/4/8/16/32/64
Peripheral module clock C (PCLKC)	MOSC/SOSC/HOCO/MOCO/LOCO/PLL	Peripheral module (ADC12 conversion clock)	Up to 48 MHz Division ratio: 1/2/4/8/16/32/64
Peripheral module clock D (PCLKD)	MOSC/SOSC/HOCO/MOCO/LOCO/PLL	Peripheral module(GPT count clock)	Up to 80 MHz Division ratio: 1/2/4/8/16/32/64
FlashIF clock (FCLK)	MOSC/SOSC/HOCO/MOCO/LOCO/PLL	FlashIF, TSN	1 MHz to 48 MHz (P/E) Up to 48 MHz (read) Division ratio: 1/2/4/8/16/32/64
CANFD clock (CANFDCLK)	MOSC/SOSC/HOCO/MOCO/LOCO/PLL	CANFD	Up to 40 MHz Division ratio: 1/2/4/6/8
CAN clock (CANMCLK)	MOSC	CANFD	1 MHz to 20 MHz
Segment LCD source clock (LCDSRCCLK)	MOSC/SOSC/HOCO/LOCO	SLCDC	Up to 80 MHz
AGT sub-clock (AGTSCLK)	SOSC	AGTW	32.768 kHz
AGT LOCO clock (AGTLCLK)	LOCO	AGTW	32.768 kHz
CAC Main clock (CACMCLK)	MOSC	CAC	Up to 20 MHz
CAC Sub clock (CACSCLK)	SOSC	CAC	32.768 kHz
CAC LOCO clock (CACLCLK)	LOCO	CAC	32.768 kHz
CAC MOCO clock (CACMOCLK)	MOCO	CAC	8 MHz
CAC HOCO clock (CACHCLK)	HOCO	CAC	24/32/40/48/64/80 MHz
CAC IWDTLOCO clock (CACILCLK)	IWDTLOCO	CAC	15 kHz
UARTA main clock (UARTAMCLK)	MOSC	UARTA	Up to 20 MHz
UARTA sub-clock (UARTASCLK)	SOSC	UARTA	32.768 kHz
UARTA LOCO clock (UARTALCLK)	LOCO	UARTA	32.768 kHz
UARTA MOCO clock (UARTAMOCLK)	MOCO	UARTA	8 MHz
UARTA HOCO clock (UARTAHCLK)	HOCO	UARTA	24/32/40/48/64/80 MHz
RTC sub-clock (RTCSCLK)	SOSC	RTC	32.768 kHz
RTC 128 Hz clock (RTCS128CLK)	SOSC	RTC	128 Hz
PLL_RTC clock (RTCPLLCLK)	PLL_RTC	RTC	26 MHz
IWDT clock (IWDTCLK)	IWDTLOCO	IWDT	15 kHz
SysTick timer clock (SYSTICCLK)	LOCO	SysTick timer	32.768 kHz
Serial wire clock (SWCLK)	SWCLK	OCD	Up to 12.5 MHz

Table 8.2 Clock generation circuit specifications for the internal clocks (2 of 2)

Item	Clock source	Clock supply	Specification
Clock/buzzer output (CLKOUT)	MOSC/SOSC/LOCO/MOCO/HOCO	CLKOUT pin	Up to 40 MHz Division ratios: 1/2/4/8/16/32/64/128

Note: Restrictions on setting clock frequency: ICLK ≥ PCLKA ≥ PCLKB, PCLKD ≥ PCLKA ≥ PCLKB
ICLK ≥ FCLK
Restrictions on clock frequency ratio: (N: integer, and up to 64)
ICLK : FCLK = 1:1 when ICLK ≤ 48 MHz, ICLK : FCLK = 2:1 when 48 MHz < ICLK ≤ 80 MHz
ICLK : PCLKA = N:1, ICLK : PCLKB = N:1, ICLK : PCLKC = N:1 or 1:N , ICLK : PCLKD = N:1 or 1:N
If the A/D converter is enabled, the clock frequency ratio is constrained as follows:
PCLKA : PCLKC = 1:1 or 2:1 or 4:1 or 8:1 or 1:2 or 1:4

Note: Restrictions on the minimum FCLK frequency 1 MHz when P/E.

Note: Clocks have a permissible frequency range (See Table 8.2).
Flash memory and SRAM also have a permissible operating frequency range in each wait cycle setting. (See section 38, SRAM, section 39, Flash Memory)
Those clock frequency ranges must be satisfied even if the HOCO has its maximum or minimum frequency. (See section 43, Electrical Characteristics).

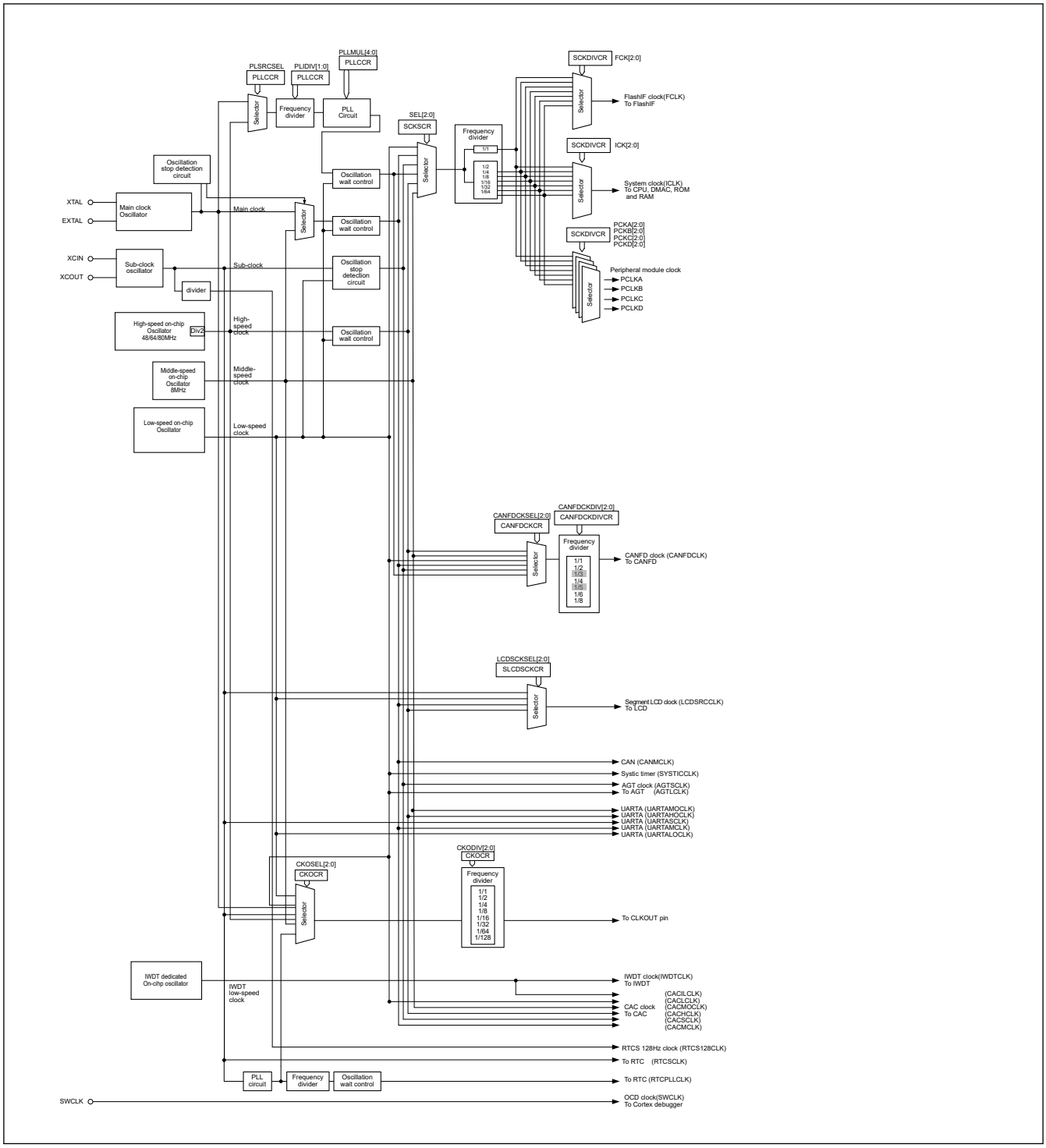

Figure 8.1 Clock generation circuit block diagram

Table 8.3 lists the input/output pins of the clock generation circuit.

Table 8.3 Input/output pins of clock generation circuit (1 of 2)

Pin name	I/O	Description
XTAL	Output	These pins are used to connect a ceramic resonator or crystal resonator. The EXTAL pin can also be used to input an external clock. For details, see section 8.3.2. External Clock Input.
EXTAL	Input	
XCIN	Input	These pins are used to connect a 32.768-kHz crystal resonator
XCOUT	Output	

Table 8.3 Input/output pins of clock generation circuit (2 of 2)

Pin name	I/O	Description
SWCLK	Input	This pin is used to input the clock for the SWD
CLKOUT	Output	This pin is used to output the CLKOUT/BUZZER clock

8.2 Register Descriptions

In this section, OFS1 represents the OFS1, OFS1_SEC, and OFS1_SEL registers. OFS1 is for non-secure developers and OFS1_SEC is for secure developers. The applied setting value is determined by OFS1_SEL.

8.2.1 CGFSAR : Clock Generation Function Security Attribute Register

Base address: SYSC = 0x4001_E000

Offset address: 0x3C0

Bit position:	31	30	29	28	27	26	25	24	23	22	21	20	19	18	17	16
Bit field:	—	—	—	—	NONSEC27	NONSEC26	—	—	—	—	—	—	—	NONSEC18	—	—
Value after reset:	1	1	1	1	1	1	1	1	1	1	1	1	1	1	1	1

Bit position:	15	14	13	12	11	10	9	8	7	6	5	4	3	2	1	0
Bit field:	—	—	—	—	NONSEC11	—	—	NONSEC08	NONSEC07	NONSEC06	NONSEC05	NONSEC04	NONSEC03	NONSEC02	—	NONSEC00
Value after reset:	1	1	1	1	1	1	1	1	1	1	1	1	1	1	1	1

Bit	Symbol	Function	R/W
0	NONSEC00*1	Non-secure Attribute bit 00 Target register: SCKDIVCR, SCKSCR Target factor: system clock control 0: Secure 1: Non-secure	R/W
1	—	This bit is read as 1. The write value should be 1.	R/W
2	NONSEC02*1	Non-secure Attribute bit 02 Target register: HOCOCR, HOCOCR2, HOCOUTCR Target factor: HOCO 0: Secure 1: Non-secure	R/W
3	NONSEC03*1	Non-secure Attribute bit 03 Target register: MOCOCR, MOCOUTCR Target factor: MOCO 0: Secure 1: Non-secure	R/W
4	NONSEC04	Non-secure Attribute bit 04 Target register: LOCOCR, LOCOUTCR Target factor: LOCO 0: Secure 1: Non-secure	R/W
5	NONSEC05	Non-secure Attribute bit 05 Target register: MOSCCR, MOSCWTCR, MOMCR Target factor: MOSC 0: Secure 1: Non-secure	R/W
6	NONSEC06	Non-secure Attribute bit 06 Target register: OSTDCR, OSTDSR, SOSTDCR Target factor: oscillation stop detection control 0: Secure 1: Non-secure	R/W

Bit	Symbol	Function	R/W
7	NONSEC07	Non-secure Attribute bit 07 Target register: SOSCCR, SOMCR, SOMRG Target factor: SOSC 0: Secure 1: Non-secure	R/W
8	NONSEC08*1	Non-secure Attribute bit 08 Target register: PLLCCR, PLLCR Target factor: PLL 0: Secure 1: Non-secure	R/W
10:9	—	These bits are read as 1. The write value should be 1.	R/W
11	NONSEC11	Non-secure Attribute bit 11 Target register: CKOCR Target factor: CLKOUT control 0: Secure 1: Non-secure	R/W
17:12	—	These bits are read as 1. The write value should be 1.	R/W
18	NONSEC18	Non-secure Attribute bit 18 Target register: CANFDCKDIVCR, CANFDCKCR Target factor: CANFDCLK 0: Secure 1: Non-secure	R/W
25:19	—	These bits are read as 1. The write value should be 1.	R/W
26	NONSEC26	Non-secure Attribute bit 26 Target register: SLCDSCKCR Target factor: LCDSRCCLK 0: Secure 1: Non-secure	R/W
27	NONSEC27	Non-secure Attribute bit 27 Target register: PLLRTCCCR, PLLRTCCR Target factor: PLL_RTC 0: Secure 1: Non-secure	R/W
31:28	—	These bits are read as 1. The write value should be 1.	R/W

Note: Only Secure access can write to this register. Both Secure access and Non-secure read access are allowed but Non-secure write access is not allowed and TrustZone access error is not generated.
Note: This register is write-protected by PRCR register.
Note 1. It is recommended that these bits are configured as Non-secure when the device life cycle is NSECSD (DLMMON.DLMMON[3:0] = 0011b). See section 42.8.1. Restrictions on setting the security attribution for the details.

CGFSAR register controls the secure attribute of Clock Generation Function registers.

NONSEC00 bit (Non-secure Attribute bit 00)

This bit controls the security attribute of SCKDIVCR and SCKSCR.

NONSEC02 bit (Non-secure Attribute bit 02)

This bit controls the security attribute of HOCOCR, HOCOCR2 and HOCOUTCR.

NONSEC03 bit (Non-secure Attribute bit 03)

This bit controls the security attribute of MOCOCR and MOCOUTCR.

NONSEC04 bit (Non-secure Attribute bit 04)

This bit controls the security attribute of LOCOCR and LOCOUTCR.

NONSEC05 bit (Non-secure Attribute bit 05)

This bit controls the security attribute of MOSCCR, MOSCWTCR, and MOMCR.

NONSEC06 bit (Non-secure Attribute bit 06)

This bit controls the security attribute of OSTDCR, OSTDSR, and SOSTDCR.

NONSEC07 bit (Non-secure Attribute bit 07)

This bit controls the security attribute of SOSCCR, SOMCR, and SOMRG.

NONSEC08 bit (Non-secure Attribute bit 08)

This bit controls the security attribute of PLLCCR and PLLCR.

NONSEC11 bit (Non-secure Attribute bit 11)

This bit controls the security attribute of CKOCR.

NONSEC18 bit (Non-secure Attribute bit 18)

This bit controls the security attribute of CANFDCKDIVCR and CANFDCKCR.

NONSEC26 bit (Non-secure Attribute bit 26)

This bit controls the security attribute of SLCDSCKCR.

NONSEC27 bit (Non-secure Attribute bit 27)

This bit controls the security attribute of PLLRTCCCR and PLLRTCCR.

8.2.2 SCKDIVCR : System Clock Division Control Register

Base address: SYSC = 0x4001_E000

Offset address: 0x020

Bit position:	31	30	29	28	27	26	25	24	23	22	21	20	19	18	17	16
Bit field:	—	FCK[2:0]			—	ICK[2:0]			—	—	—	—	—	—	—	—
Value after reset:	0	1	0	0	0	1	0	0	0	0	0	0	0	0	0	0

Bit position:	15	14	13	12	11	10	9	8	7	6	5	4	3	2	1	0
Bit field:	—	PCKA[2:0]			—	PCKB[2:0]			—	PCKC[2:0]			—	PCKD[2:0]		
Value after reset:	0	1	0	0	0	1	0	0	0	1	0	0	0	1	0	0

Bit	Symbol	Function	R/W
2:0	PCKD[2:0]*3	Peripheral Module Clock D (PCLKD) Select 0 0 0: × 1/1 0 0 1: × 1/2 0 1 0: × 1/4 0 1 1: × 1/8 1 0 0: × 1/16 1 0 1: × 1/32 1 1 0: × 1/64 Others: Setting prohibited.	R/W
3	—	This bit is read as 0. The write value should be 0.	R/W
6:4	PCKC[2:0]*3	Peripheral Module Clock C (PCLKC) Select 0 0 0: × 1/1 0 0 1: × 1/2 0 1 0: × 1/4 0 1 1: × 1/8 1 0 0: × 1/16 1 0 1: × 1/32 1 1 0: × 1/64 Others: Setting prohibited.	R/W
7	—	This bit is read as 0. The write value should be 0.	R/W

Bit	Symbol	Function	R/W
10:8	PCKB[2:0]*2	Peripheral Module Clock B (PCLKB) Select 0 0 0: × 1/1 0 0 1: × 1/2 0 1 0: × 1/4 0 1 1: × 1/8 1 0 0: × 1/16 1 0 1: × 1/32 1 1 0: × 1/64 Others: Setting prohibited.	R/W
11	—	This bit is read as 0. The write value should be 0.	R/W
14:12	PCKA[2:0]*2	Peripheral Module Clock A (PCLKA) Select 0 0 0: × 1/1 0 0 1: × 1/2 0 1 0: × 1/4 0 1 1: × 1/8 1 0 0: × 1/16 1 0 1: × 1/32 1 1 0: × 1/64 Others: Setting prohibited.	R/W
23:15	—	These bits are read as 0. The write value should be 0.	R/W
26:24	ICK[2:0]*1 *2 *3 *4	System Clock (ICLK) Select 0 0 0: × 1/1 0 0 1: × 1/2 0 1 0: × 1/4 0 1 1: × 1/8 1 0 0: × 1/16 1 0 1: × 1/32 1 1 0: × 1/64 Others: Setting prohibited.	R/W
27	—	This bit is read as 0. The write value should be 0.	R/W
30:28	FCK[2:0]*1	FlashIF Clock (FCLK) Select 0 0 0: × 1/1 0 0 1: × 1/2 0 1 0: × 1/4 0 1 1: × 1/8 1 0 0: × 1/16 1 0 1: × 1/32 1 1 0: × 1/64 Others: Setting prohibited.	R/W
31	—	This bit is read as 0. The write value should be 0.	R/W

Note: If the security attribution is configured as Secure:
- Secure access and Non-secure read access are allowed
- Non-secure write access is ignored, and TrustZone access error is not generated.

If the security attribution is configured as Non-secure:
- Secure and Non-secure access are allowed.

Note: Set the PRCR.PRC0 bit to 1 (write enabled) before rewriting this register.

Note 1. The following relation is required between the frequencies of the system clock (ICLK) and the FlashIF clock (FCLK).
ICLK : FCLK = 1:1 when ICLK ≦ 48 MHz, ICLK : FCLK = 2:1 when 48 MHz < ICLK ≦ 80 MHz

Note 2. The following relation is required between the frequencies of the system clock (ICLK) and the peripheral module clocks (PCLKA, PCLKB)
ICLK:PCLKA = N:1, ICLK:PCLKB = N:1 (N: integer)

Note 3. The following relation is required between the frequencies of the system clock (ICLK) and the peripheral module clocks (PCLKC, PCLKD):
ICLK:PCLKC, PCLKD = N:1 or 1:N (N: integer)

Note 4. The frequency of the system clock (ICLK) is limited to the Memory Wait Cycle Control register (MEMWAIT). See section 8.2.4. MEMWAIT : Memory Wait Cycle Control Register for Code Flash.

SCKDIVCR selects the frequencies of the system clock (ICLK), peripheral module clock (PCLKA, PCLKB, PCLKC, PCLKD), FlashIF clock (FCLK).

8.2.3 SCKSCR : System Clock Source Control Register

Base address: SYSC = 0x4001_E000

Offset address: 0x026

Bit position:	7	6	5	4	3	2	1	0
Bit field:	—	—	—	—	—	CKSEL[2:0]		
Value after reset:	0	0	0	0	0	0	0	1

Bit	Symbol	Function	R/W
2:0	CKSEL[2:0]	Clock Source Select 0 0 0: HOCO 0 0 1: MOCO 0 1 0: LOCO 0 1 1: Main clock oscillator (MOSC) 1 0 0: Sub-clock oscillator (SOSC) 1 0 1: PLL 1 1 0: Setting prohibited 1 1 1: Setting prohibited	R/W
7:3	—	These bits are read as 0. The write value should be 0.	R/W

Note: Set the PRCR.PRC0 bit to 1 (write enabled) before rewriting this register.

Note: If the security attribution is configured as Secure:
- Secure access and Non-secure read access are allowed
- Non-secure write access is ignored, and TrustZone access error is not generated.

If the security attribution is configured as Non-secure:
- Secure and Non-secure access are allowed.

The SCKSCR register selects the clock source for the system clock.

CKSEL[2:0] bits (Clock Source Select)

The CKSEL[2:0] bits select the source for the following modules:

- System clock (ICLK)
- Peripheral module clocks (PCLKA, PCLKB, PCLKC, and PCLKD)
- FlashIF clock (FCLK)

The bits select from one of the following sources:

- Low-speed on-chip oscillator (LOCO)
- Middle-speed on-chip oscillator (MOCO)
- High-speed on-chip oscillator (HOCO)
- Main clock oscillator (MOSC)
- Sub-clock oscillator (SOSC)
- PLL

The operating state of each clock source is controlled not only by the clock oscillation enable settings but also by the operating modes of the product. Some clock sources might be forcibly stopped depending on the product operating mode being used.

Check the operation state of clock sources in each product operating mode, and do not select the clock source to be stopped in SCKSCR. The clock sources should be switched when there are no occurring internal asynchronous interrupt. For details, see section 10, Low Power Modes.

8.2.4 MEMWAIT : Memory Wait Cycle Control Register for Code Flash

Base address: SYSC = 0x4001_E000

Offset address: 0x031

Bit position:	7	6	5	4	3	2	1	0
Bit field:	—	—	—	—	—	—	MEMWAIT[1:0]	
Value after reset:	0	0	0	0	0	0	0	0

Bit	Symbol	Function	R/W
1:0	MEMWAIT[1:0]	Memory Wait Cycle Select for Code Flash 0 0: No wait 0 1: One wait 1 0: Two waits Others: Setting prohibited	R/W
7:2	—	These bits are read as 0. The write value should be 0.	R/W

Note: Set the PRCR.PRC0 bit to 1 (write enabled) before rewriting this register.
Note: Writing 0 to the MEMWAIT[1:0] bits is prohibited when SCKDIVCR.ICK bit selects division by 1 and SCKSCR.CKSEL[2:0] bits select the system clock source that is faster than 32 MHz (ICLK > 32 MHz).
Note: The security attribute of MEMWAIT[1:0] is controlled by FSAR.FLWTSA.

The MEMWAIT[1:0] register controls the wait cycle of code flash read access.

MEMWAIT[1:0] bits (Memory Wait Cycle Select for Code Flash)

The MEMWAIT[1:0] bits select the wait cycle of code flash read access. The wait cycle of code flash access is set to no wait (MEMWAIT[1:0] = 00) after a reset is released.

Before writing to the MEMWAIT[1:0] bits, check the ICLK frequency and operating power control mode. The following restrictions apply when setting the ICLK and operating power control mode, including the MEMWAIT[1:0] bits. Use the following steps to switch the frequency.

Increasing the frequency

Use the following procedure when transitioning from Range 1 to Range 2, Range 3 or from Range 2 to Range 3. See Table 8.4 for an explanation of each range.

1. Check and set the FCLK division ratio if required.
2. Confirm and set the MEMWAIT[1:0] bits if required.
3. Change the frequency of the source clock.

Depending on the frequency to be changed, it is necessary to change the mode of the power supply. For details, see section 10, Low Power Modes.

Lowering the frequency

Use the following procedure when transitioning from Range 3 to Range 2, Range 1 or from Range 2 to Range 1. See Table 8.4 for an explanation of each range.

1. Change the frequency of the source clock.
2. Confirm and set the MEMWAIT[1:0] bits if required.
3. Check and set the FCLK division ratio if required.

Depending on the frequency to be changed, it is necessary to change the mode of the power supply. For details, see section 10, Low Power Modes.

Table 8.4 Case by frequency ranges and related conditions (1 of 2)

	Range 1	Range 2	Range 3
Frequency of ICLK	ICLK ≤ 32 MHz	32 MHz < ICLK ≤ 48 MHz	48 MHz < ICLK ≤ 80 MHz

Table 8.4 Case by frequency ranges and related conditions (2 of 2)

	Range 1	Range 2	Range 3
Division ratio of FCLK	1 (recommended) 2*1	1 (recommended) 2*1	2
MEMWAIT[1:0]	00 (0 wait, recommended) 01*1 (1 wait) 10*1 (2 waits)	01 (1 wait, recommended) 10*1 (2 waits)	10 (2 waits)

Note 1. Allowed during the frequency range change process.

Table 8.5 MEMWAIT[1:0] bit setting

MEMWAIT[1:0] bits	MCU operation power control			
	Mode: except High-speed mode	High-speed mode		
		ICLK ≤ 32 MHz	32 MHz < ICLK ≤ 48 MHz	48 MHz < ICLK ≤ 80 MHz
00	✓	✓	—	—
01	—	✓	✓	—
10	—	✓	✓	✓

Note: ✓ : Setting is possible.
— : Setting is not possible.

8.2.5 FLDWAITR : Memory Wait Cycle Control Register for Data Flash

Base address: FLCN = 0x407E_C000

Offset address: 0x3FC4

Bit position:	7	6	5	4	3	2	1	0
Bit field:	—	—	—	—	—	—	—	FLDWAIT1
Value after reset:	0	0	0	0	0	0	0	0

Bit	Symbol	Function	R/W
0	FLDWAIT1	Memory Wait Cycle Select for Data Flash 0: One wait access (default) 1: Two wait accesses	R/W
7:1	—	These bits are read as 0. The write value should be 0.	R/W

Note: If the security attribution is configured as Secure:
- Secure access and Non-secure read access are allowed
- Non-secure write access is ignored, and TrustZone access error is not generated.

If the security attribution is configured as Non-secure:
- Secure and Non-secure access are allowed.

Note: Writing 0 to the FLDWAIT1 bit is prohibited when SCKDIVCR.ICK bit selects division by 1 and SCKSCR.CKSEL[2:0] bits select the system clock source that is faster than 32 MHz (ICLK > 32 MHz).

The FLDWAITR register controls the wait cycle of data flash read access.

FLDWAIT1 bit (Memory Wait Cycle Select for Data Flash)

This bit selects the wait cycle of data flash read access. The wait cycle of data flash access is set to 1 wait (FLDWAIT1 = 0) after a reset is released.

The FLDWAIT1 settings for the data flash read access wait cycle are as follows:

- FLDWAIT1 = 0: 1 wait cycle
- FLDWAIT1 = 1: 2 wait cycles

Before writing to the FLDWAIT1 bit, check the ICLK frequency and operating power control mode. The following restrictions apply when setting the ICLK and operating power control mode, including the FLDWAIT1 bit:

- When setting the ICLK faster than 32 MHz (ICLK > 32 MHz), set FLDWAIT1 to 1 while ICLK is 32 MHz or less (ICLK ≤ 32 MHz) and the operating power control mode is High-speed mode (OPCCR.OPCM[1:0] = 00b). Setting FLDWAIT1 to 1 is prohibited in operation modes other than High-speed mode. Setting the ICLK faster than 32 MHz is prohibited while FLDWAIT1 = 0.
- When setting the ICLK from 32 MHz or faster (ICLK > 32 MHz) to 32 MHz or less (ICLK ≤ 32 MHz), the ICLK frequency must be set to 32 MHz or less while FLDWAIT1 = 1. Setting FLDWAIT1 to 0 is prohibited while ICLK is faster than 32 MHz. Setting FLDWAIT1 to 1 is prohibited in operation modes other than High-speed mode. FLDWAIT1 can be set to 0 while the ICLK frequency is 32 MHz or less and operating power control mode is High-speed mode (OPCCR.OPCM[1:0] = 00b).

Table 8.6 FLDWAIT1 bit setting

FLDWAIT1 bit	MCU operation power control		
	Mode: except High-speed mode	High-speed mode	
		ICLK ≤ 32 MHz	ICLK > 32 MHz
0	✓	✓	—
1	—	✓	✓

Note: ✓ : Setting is possible.
— : Setting is not possible.

Figure 8.2 shows an example flow when setting ICLK faster than 32 MHz.

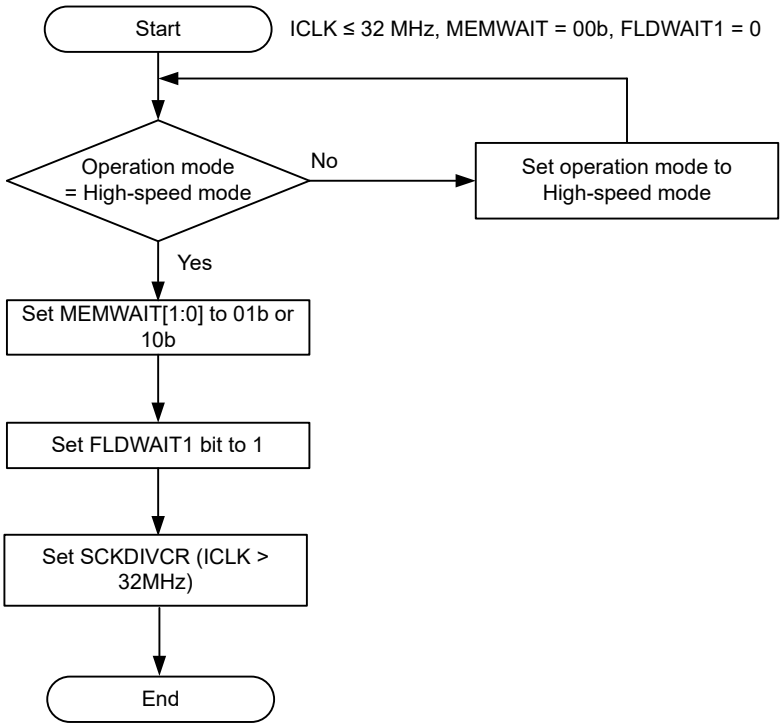

Figure 8.2 When setting ICLK > 32 MHz

Figure 8.3 shows an example flow when setting ICLK less than or equal to 32 MHz when ICLK is greater than 32 MHz.

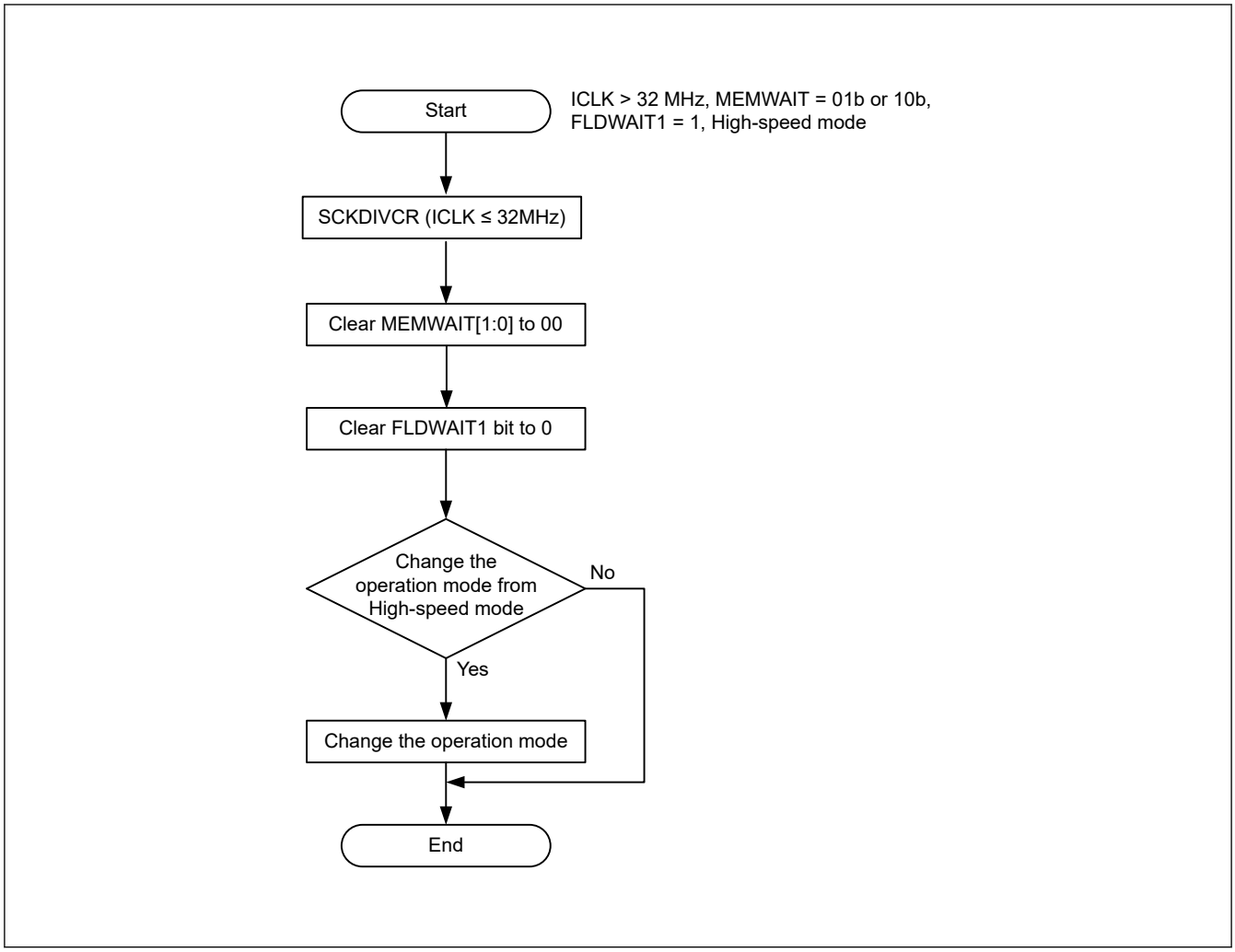

Figure 8.3 When setting ICLK ≤ 32 MHz from ICLK > 32 MHz

8.2.6 PLLCCR : PLL Clock Control Register

Base address: SYSC = 0x4001_E000

Offset address: 0x028

Bit position:	15	14	13	12	11	10	9	8	7	6	5	4	3	2	1	0
Bit field:	—	—	—	PLLMUL[4:0]					—	—	—	PLSRCSEL	—	—	PLIDIV[1:0]	
Value after reset:	0	0	0	0	0	1	1	1	0	0	0	0	0	0	0	0

Bit	Symbol	Function	R/W
1:0	PLIDIV[1:0]*1	PLL Input Frequency Division Ratio Select 0 0: /1 0 1: /4 1 0: /6 Others: Setting prohibited	R/W
3:2	—	These bits are read as 0. The write value should be 0.	R/W
4	PLSRCSEL	PLL Clock Source Select 0: Main clock oscillator 1: HOCO	R/W
7:5	—	These bits are read as 0. The write value should be 0.	R/W

Bit	Symbol	Function	R/W
12:8	PLLMUL[4:0]*2	PLL Frequency Multiplication Factor Select 0x07: × 4 (value after reset) 0x08: × 4.5 0x09: × 5 ⋮ 0x1C: × 14.5 0x1D: × 15 0x1E: × 15.5 Others: Setting prohibited	R/W
15:13	—	These bits are read as 0. The write value should be 0.	R/W

Note: If the security attribution is configured as Secure:
- Secure access and Non-secure read access are allowed
- Non-secure write access is ignored, and TrustZone access error is not generated.

If the security attribution is configured as Non-secure:
- Secure and Non-secure access are allowed.

Note: Set the PRCR.PRC0 bit to 1 (write enabled) before rewriting this register.
Note 1. PLIDIV[1:0] should be set so that the frequency of PLL input signal is within the range of section 8.1. Overview.
Note 2. PLLMUL[4:0] should be set so that the frequency of PLL output signal is within the range of section 8.1. Overview.

The PLLCCR register sets the operation of the PLL circuit.

Writing to the PLLCCR is prohibited when the PLLCR.PLLSTP bit is 0 (the PLL operates).

PLIDIV[1:0] bits (PLL Input Frequency Division Ratio Select)

These bits select the frequency division ratio of the PLL clock source.

PLSRCSEL bit (PLL Clock Source Select)

This bit selects the clock source for the PLL.

PLLMUL[4:0] bits (PLL Frequency Multiplication Factor Select)

These bits select the frequency multiplication factor of the PLL circuit.

8.2.7 PLLCR : PLL Control Register

Base address: SYSC = 0x4001_E000

Offset address: 0x02A

Bit position:	7	6	5	4	3	2	1	0
Bit field:	—	—	—	—	—	—	—	PLLSTP
Value after reset:	0	0	0	0	0	0	0	1

Bit	Symbol	Function	R/W
0	PLLSTP	PLL Stop Control 0: PLL is operating 1: PLL is stopped	R/W
7:1	—	These bits are read as 0. The write value should be 0.	R/W

Note: If the security attribution is configured as Secure:
- Secure access and Non-secure read access are allowed
- Non-secure write access is ignored, and TrustZone access error is not generated.

If the security attribution is configured as Non-secure:
- Secure and Non-secure access are allowed.

Note: Set the PRCR.PRC0 bit to 1 (write enabled) before rewriting this register.

The PLLCR register controls the operation of the PLL circuit.

PLLSTP bit (PLL Stop Control)

This bit runs or stops the PLL circuit.

If the main clock oscillator is to be selected as the clock source for the PLL by the PLLCCR.PLSRCSEL bit, the Main Clock Oscillator Wait Control Register (MOSCWTCR) must be set.

After the PLLSTP bit setting is changed to run the PLL, only use the PLL clock after confirming that the OSCSF.PLLSF bit is set to 1. That is, a fixed time for stabilization is required after starting the PLL operation. A fixed time is also required for oscillation to stop after stopping the PLL operation. Additionally, apply the following limitations when starting and stopping the PLL operation by the PLLSTP bit:

- After stopping the PLL, confirm that the OSCSF.PLLSF bit is 0 before restarting the PLL.
- Confirm that the PLL is operating and that the OSCSF.PLLSF bit is 1 before stopping the PLL.
- Regardless of whether the PLL clock is selected as the system clock, confirm that the OSCSF.PLLSF is set to 1 before executing a WFI instruction to place the MCU in Software Standby mode after operating the PLL.
- When transitioning to Software Standby mode after stopping the PLL, confirm that the OSCSF.PLLSF bit is cleared to 0 before executing a WFI instruction.

Writing 1 to the PLLSTP bit is prohibited when SCKSCR.CKSEL[2:0] = 101 (system clock source = PLL).

Confirm the following conditions before writing 0 to PLLSTP:

- When PLL source clock = MOSC: MOSCCR.MOSTP = 0 (MOSC is enabled)
- When PLL source clock = HOCO: HOCOCR.HCSTP = 0 (HOCO is enabled).

8.2.8 PLLRTCCR : PLL_RTC Control Register

Base address: SYSC = 0x4001_E000

Offset address: 0x056

Bit position:	7	6	5	4	3	2	1	0
Bit field:	—	—	—	—	—	—	—	PLLRTCSTP
Value after reset:	0	0	0	0	0	0	0	1

Bit	Symbol	Function	R/W
0	PLLRTCSTP	PLL_RTC Stop Control 0: PLL_RTC is operating. 1: PLL_RTC is stopped.	R/W
7:1	—	These bits are read as 0. The write value should be 0.	R/W

The PLLRTCCR register controls the operation of the PLL circuit.

PLLRTCSTP bit (PLL_RTC Stop Control)

This bit runs or stops the PLL_RTC circuit.

After the setting of the PLLRTCSTP bit has been changed to make the PLL_RTC run, only start using the PLL_RTC clock after confirming that the OSCSF.PLLRTCSF bit has been set to 1.

That is, a fixed time for stabilization is required after the setting for PLL_RTC operation. A fixed time is also required for oscillation to stop after the setting to stop PLL_RTC operation. Accordingly, take note of the following limitations when starting and stopping PLL_RTC operation by the PLLRTCSTP bit.

- After stopping the PLL_RTC, confirm that the OSCSF.PLLRTCSF bit is 0 before restarting the PLL_RTC.
- Confirm that the PLL_RTC is operating and that the OSCSF.PLLRTCSF bit is 1 before stopping the PLL_RTC.
- PLL_RTC operation is prohibited when setting to software standby mode.
- When transitioning to Software Standby mode after stopping the PLL_RTC, confirm that the OSCSF.PLLRTCSF bit is cleared to 0 before executing a WFI instruction.

Writing 1 to the PLLRTCSTP bit is prohibited when RCR4.RTCOHP = 1 (Output RTCOUT with high precision).

Make sure that Sub-clock oscillation is enabled and stable (t_{SUBOSC} needs to be elapsed), before writing PLLRTCSTP = 0.

8.2.9 MOSCCR : Main Clock Oscillator Control Register

Base address: SYSC = 0x4001_E000

Offset address: 0x032

Bit position:	7	6	5	4	3	2	1	0
Bit field:	—	—	—	—	—	—	—	MOSTP
Value after reset:	0	0	0	0	0	0	0	1

Bit	Symbol	Function	R/W
0	MOSTP	Main Clock Oscillator Stop 0: Operate the main clock oscillator*1 1: Stop the main clock oscillator	R/W
7:1	—	These bits are read as 0. The write value should be 0.	R/W

Note: Set the PRCR.PRC0 bit to 1 (write enabled) before rewriting this register.

Note: If the security attribution is configured as Secure:
- Secure access and Non-secure read access are allowed
- Non-secure write access is ignored, and TrustZone access error is not generated.

If the security attribution is configured as Non-secure:
- Secure and Non-secure access are allowed.

Note 1. MOMCR register must be set before setting MOSTP to 0.

The MOSCCR register controls the main clock oscillator.

MOSTP bit (Main Clock Oscillator Stop)

The MOSTP bit starts or stops the main clock oscillator.

When changing the value of the MOSTP bit, execute subsequent instructions only after reading the bit to check that the value is updated.

When using the main clock, the Main Clock Oscillator Mode Oscillation Control Register (MOMCR) and the Main Clock Oscillator Wait Control Register (MOSCWTCR) must be set before setting MOSTP to 0. After setting the MOSTP bit to 0, confirm that the OSCSF.MOSCSF bit is set to 1 before using the main clock oscillator.

A fixed stabilization wait time is required after setting the main clock oscillator to start operation. A fixed wait time is also required for oscillation to stop after stopping the main clock oscillator.

The following restrictions apply when starting and stopping operation:

- After stopping the main clock oscillator, confirm that the OSCSF.MOSCSF bit is 0 before restarting the main clock oscillator
- Confirm that the main clock oscillator operates and that the OSCSF.MOSCSF bit is 1 before stopping the main clock oscillator
- Regardless of whether the main clock oscillator is selected as the system clock, confirm that the OSCSF.MOSCSF bit is set to 1 before executing a WFI instruction to place the MCU in Software Standby mode after operating the main clock oscillator
- When a transition to Software Standby mode is to follow the setting to stop the main clock oscillator, confirm that the OSCSF.MOSCSF bit is set to 0 before executing the WFI instruction

Writing 1 to MOSTP is prohibited under the following condition:

- SCKSCR.CKSEL[2:0] = 011b (system clock source = MOSC)
- PLLCCR.PLSRCSEL = 0 (PLL source clock = MOSC) and SCKSCR.CKSEL[2:0] = 101b (system clock source = PLL)
- PLLCCR.PLSRCSEL = 0 (PLL source clock = MOSC) and PLLCR.PLLSTP = 0 (PLL is operating)

8.2.10 SOSCCR : Sub-Clock Oscillator Control Register

Base address: SYSC = 0x4001_E000

Offset address: 0x480

Bit position:	7	6	5	4	3	2	1	0
Bit field:	—	—	—	—	—	—	—	SOSTP
Value after reset:	0	0	0	0	0	0	0	1*2

Bit	Symbol	Function	R/W
0	SOSTP	Sub Clock Oscillator Stop 0: Operate the sub-clock oscillator*1 1: Stop the sub-clock oscillator	R/W
7:1	—	These bits are read as 0. The write value should be 0.	R/W

Note: Set the PRCR.PRC0 bit to 1 (write enabled) before rewriting this register.
Note: If the security attribution is configured as Secure:
- Secure access and Non-secure read access are allowed
- Non-secure write access is ignored, and TrustZone access error is not generated.

If the security attribution is configured as Non-secure:
- Secure and Non-secure access are allowed.

Note 1. The SOMCR register must be set before setting SOSTP to 0.
Note 2. This bit is only initialized at VRTC_POR.

The SOSCCR register controls the sub-clock oscillator.

SOSTP bit (Sub Clock Oscillator Stop)

The SOSTP bit starts or stops the sub-clock oscillator. When changing the value of the SOSTP bit, only execute subsequent instructions after reading the bit to check that the value is updated. Use the SOSTP bit when using the sub-clock oscillator as the source for a peripheral module, for example the RTC. When using the sub-clock oscillator, set the Sub-Clock Oscillator Mode Control Register (SOMCR) before setting SOSTP to 0.

The following restrictions apply when starting and stopping the operation:

- After stopping the sub-clock oscillator, allow a stop interval of at least 5 SOSC clock cycles before restarting it
- After setting the SOSTP bit to 0, use the sub-clock only after the sub-clock oscillation stabilization time ($t_{SUBOSCWT}$) has elapsed
- Regardless of whether the sub-clock oscillator is selected as the system clock, confirm that the sub-clock oscillation is stable before executing a WFI instruction to place the MCU in Software Standby mode
- When a transition to Software Standby mode is to follow the setting to stop the sub-clock oscillator, wait for at least 3 SOSC clock cycles before executing the WFI instruction.

Writing 1 to SOSTP is prohibited under the following condition:

- SCKSCR.CKSEL[2:0] = 100b (system clock source = SOSC).

8.2.11 LOCOCR : Low-Speed On-Chip Oscillator Control Register

Base address: SYSC = 0x4001_E000

Offset address: 0x490

Bit position:	7	6	5	4	3	2	1	0
Bit field:	—	—	—	—	—	—	—	LCSTP
Value after reset:	0	0	0	0	0	0	0	0

Bit	Symbol	Function	R/W
0	LCSTP	LOCO Stop 0: Operate the LOCO clock 1: Stop the LOCO clock	R/W
7:1	—	These bits are read as 0. The write value should be 0.	R/W

Note: Set the PRCR.PRC0 bit to 1 (write enabled) before rewriting this register.
Note: If the security attribution is configured as Secure:
- Secure access and Non-secure read access are allowed
- Non-secure write access is ignored, and TrustZone access error is not generated.

If the security attribution is configured as Non-secure:
- Secure and Non-secure access are allowed.

The LOCOCR register controls the LOCO clock.

LCSTP bit (LOCO Stop)

The LCSTP bit starts or stops the LOCO clock.

After setting the LCSTP bit to 0 to start the LOCO clock, only use the clock after the LOCO clock-oscillation stabilization time (t_{LOCO}) elapses. A fixed stabilization wait time is required after setting the LOCO clock to start operation. A fixed wait time is also required after setting the LOCO clock to stop.

The following restrictions apply when starting and stopping operation:

- After stopping the LOCO clock, allow a stop interval of at least 5 LOCO clock cycles before restarting it
- Confirm that LOCO oscillation is stable before stopping the LOCO clock
- Regardless of whether the LOCO is selected as the system clock, confirm that LOCO oscillation is stable before executing a WFI instruction to place the MCU in Software Standby mode
- When a transition to Software Standby mode is to follow the setting to stop the LOCO clock, wait for at least 3 LOCO cycles before executing the WFI instruction.

Writing 1 to LCSTP is prohibited under the following condition:

- SCKSCR.CKSEL[2:0] = 010b (system clock source = LOCO).

8.2.12 HOCOCR : High-Speed On-Chip Oscillator Control Register

Base address: SYSC = 0x4001_E000

Offset address: 0x036

Bit position:	7	6	5	4	3	2	1	0
Bit field:	—	—	—	—	—	—	—	HCSTP
Value after reset:	0	0	0	0	0	0	0	0/1*1

Bit	Symbol	Function	R/W
0	HCSTP	HOCO Stop 0: Operate the HOCO clock *2 *3 *4 *5 1: Stop the HOCO clock	R/W
7:1	—	These bits are read as 0. The write value should be 0.	R/W

Note: Set the PRCR.PRC0 bit to 1 (write enabled) before rewriting this register.
Note: If the security attribution is configured as Secure:
- Secure access and Non-secure read access are allowed
- Non-secure write access is ignored, and TrustZone access error is not generated.

If the security attribution is configured as Non-secure:
- Secure and Non-secure access are allowed.

Note 1. The HCSTP bit value after a reset is 0 when the OFS1.HOCOEN bit is 0. It is 1 when the OFS1.HOCOEN bit is 1.
Note 2. If you are using the HOCO (HCSTP = 0), set the OFS1.HOCOFRQ0[2:0] bits to an optimum value.
Note 3. Writing to OPCCR.OPCM[1:0] is prohibited while HOCOCR.HCSTP = 0 and OSCSF.HOCOSF = 0 (HOCO is in stabilization wait counting).
Note 4. Writing HCSTP is prohibited while OPCCR.OPCMTSF = 1 or SOPCCR.SOPCMTSF = 1 (during transition of operating power control mode).

Note 5. To use self-programming, it is necessary to start the HOCO (HCSTP = 0) and ensure that the oscillation is in a stable state (OSCSF.HOCOSF = 0) before executing the self-programming.

The HOCOCR register controls the HOCO clock.

HCSTP bit (HOCO Stop)

The HCSTP bit starts or stops the HOCO clock.

After setting the HCSTP bit to 0 to start the HOCO clock, confirm that the OSCSF.HOCOSF is set to 1 before using the clock. When OFS1.HOCOEN is set to 0, confirm that OSCSF.HOCOSF is also set to 1 before using the HOCO clock. A fixed stabilization wait time is required after setting the HOCO clock to start operation. A fixed wait time is also required after setting the HOCO clock to stop.

The following limitations apply when starting and stopping operation:

- After stopping the HOCO clock, confirm that the OSCSF.HOCOSF is 0 before restarting the HOCO clock
- Confirm that the HOCO clock operates and that the OSCSF.HOCOSF is 1 before stopping the HOCO clock
- Regardless of whether the HOCO clock is selected as the system clock, confirm that the OSCSF.HOCOSF is set to 1 before executing a WFI instruction to place the MCU in Software Standby mode after setting HOCO operation with the HCSTP bit
- When a transition to Software Standby mode is to follow the setting of the HOCO clock to stop, confirm that the OSCSF.HOCOSF is set to 0 after setting the HOCO clock and before executing the WFI instruction.

Writing 1 to HCSTP is prohibited under the following conditions:

- SCKSCR.CKSEL[2:0] = 000b (system clock source = HOCO)
- PLLCCR.PLSRCSEL = 1 (PLL source clock = HOCO) and SCKSCR.CKSEL[2:0] = 101b (system clock source = PLL)
- PLLCCR.PLSRCSEL = 1 (PLL source clock = HOCO) and PLLCR.PLLSTP = 0 (PLL is operating)

8.2.13 HOCOCR2 : High-Speed On-Chip Oscillator Control Register 2

Base address: SYSC = 0x4001_E000

Offset address: 0x037

Bit position:	7	6	5	4	3	2	1	0
Bit field:	—	—	—	—	—	HCFRQ0[2:0]		
Value after reset:	0	0	0	0	0	0/1*1	0/1*1	0/1*1

Bit	Symbol	Function	R/W
2:0	HCFRQ0[2:0]	HOCO Frequency Setting 0*2 0 0 0: 48 MHz 0 0 1: 64 MHz 0 1 0: 80 MHz 1 0 0: 24 MHz 1 0 1: 32 MHz 1 1 0: 40 MHz Others: Setting prohibited	R/W
7:3	—	These bits are read as 0. The write value should be 0.	R/W

Note: Set the PRCR.PRC0 bit to 1 (write enabled) before rewriting this register.

Note: If the security attribution is configured as Secure:
- Secure access and Non-secure read access are allowed
- Non-secure write access is ignored, and TrustZone access error is not generated.

If the security attribution is configured as Non-secure:
- Secure and Non-secure access are allowed.

Note 1. Value after reset of the HCFRQ0[2:0] bits depend on OFS1.HOCOFRQ0[2:0] bits.

Note 2. The value of OFS1.HOCOFRQ0[2:0] bits is automatically transferred to HOCOCR2.HCFRQ0[2:0] bits after reset, therefore the HOCO frequency can also be specified by HOCOCR2.HCFRQ0[2:0] bits.

The HOCOCR2 register controls the HOCO clock. Writing to the HOCOCR2 is prohibited when the HOCOCR.HCSTP bit is 0 (the HOCO operates).

Writing to the HOCOCR2 is prohibited when the debugger is connected.

8.2.14 MOCOCR : Middle-Speed On-Chip Oscillator Control Register

Base address: SYSC = 0x4001_E000

Offset address: 0x038

Bit position:	7	6	5	4	3	2	1	0
Bit field:	—	—	—	—	—	—	—	MCSTP
Value after reset:	0	0	0	0	0	0	0	0

Bit	Symbol	Function	R/W
0	MCSTP	MOCO Stop 0: MOCO clock is operating 1: MOCO clock is stopped	R/W
7:1	—	These bits are read as 0. The write value should be 0.	R/W

Note: Set the PRCR.PRC0 bit to 1 (write enabled) before rewriting this register.

Note: If the security attribution is configured as Secure:
- Secure access and Non-secure read access are allowed
- Non-secure write access is ignored, and TrustZone access error is not generated.

If the security attribution is configured as Non-secure:
- Secure and Non-secure access are allowed.

The MOCOCR register controls the MOCO clock.

MCSTP bit (MOCO Stop)

The MCSTP bit starts or stops the MOCO clock.

After setting MCSTP to 0, use the MOCO clock only after the MOCO clock oscillation stabilization time (t_{MOCO}) elapses. A fixed stabilization wait time is required after setting the MOCO clock to start operation. A fixed wait time is also required for oscillation to stop after setting the MOCO clock to stop operation.

The following restrictions apply when starting and stopping the oscillator:

- After stopping the MOCO clock, allow a stop interval of at least 5 MOCO clock cycles before restarting it
- Confirm that MOCO clock oscillation is stable before stopping the MOCO clock
- Regardless of whether the MOCO clock is selected as the system clock, confirm that MOCO clock oscillation is stable before executing a WFI instruction to place the MCU in Software Standby mode
- When a transition to Software Standby mode is to follow the setting to stop the MOCO clock, wait for at least 3 MOCO clock cycles before executing the WFI instruction.

Writing 1 to MCSTP is prohibited under the following condition:

- SCKSCR.CKSEL[2:0] = 001b (system clock source = MOCO).

Writing 1 to the MCSTP bit (stopping the MOCO) is prohibited if oscillation stop detection is enabled in the Oscillation Stop Detection Control Register (OSTDCR.OSTDE).

Because the MOCO clock measures the wait time for other oscillators, it continues to oscillate while measuring this time, regardless of the setting in MOCOCR.MCSTP. As a result, the MOCO clock might be unintentionally supplied even when the MCSTP is set to stop.

8.2.15 OSCSF : Oscillation Stabilization Flag Register

Base address: SYSC = 0x4001_E000

Offset address: 0x03C

Bit position:	7	6	5	4	3	2	1	0
Bit field:	PLLRTCSF	—	PLLSF	—	MOSCSF	—	—	HOCOSF
Value after reset:	0	0	0	0	0	0	0	0/1*1

Bit	Symbol	Function	R/W
0	HOCOSF	HOCO Clock Oscillation Stabilization Flag 0: The HOCO clock is stopped or is not yet stable 1: The HOCO clock is stable, so is available for use as the system clock	R
2:1	—	These bits are read as 0.	R
3	MOSCSF	Main Clock Oscillation Stabilization Flag 0: The main clock oscillator is stopped (MOSTP = 1) or is not yet stable*2 1: The main clock oscillator is stable, so is available for use as the system clock	R
4	—	This bit is read as 0.	R
5	PLLSF	PLL Clock Oscillation Stabilization Flag 0: The PLL clock is stopped, or oscillation of the PLL clock is not stable yet 1: The PLL clock is stable, so is available for use as the system clock	R
6	—	This bit is read as 0.	R
7	PLLRTCSF	PLL_RTC Clock Oscillation Stabilization Flag 0: The PLL_RTC clock is stopped or oscillation of the PLL_RTC clock is not yet stable 1: The PLL_RTC clock is stable so the clock is available	R

Note 1. The value after reset depends on the OFS1.HOCOEN setting.
When OFS1.HOCOEN = 1 (disable HOCO), the value after reset of HOCOSF is 0.
When OFS1.HOCOEN = 0 (enable HOCO), the HOCOSF value is set to 0 immediately after reset is released, and the HOCOSF value is set to 1 after the HOCO oscillation stabilization time elapses.

Note 2. This is true when an appropriate value is set in the Wait Control register for the main clock oscillator. If the wait time value is not sufficient, the oscillation stabilization flag is set to 1 and supply of the clock signal to the internal circuits starts before oscillation is stable.

This register is not controlled by CGFSAR register.

The OSCSF register contains flags to indicate the operating status of the counters in the oscillation stabilization wait circuits for the individual oscillators. After oscillation starts, these counters measure the wait time until each oscillator output clock is supplied to the internal circuits. An overflow of a counter indicates that the clock supply is stable and available for the associated circuit.

HOCOSF flag (HOCO Clock Oscillation Stabilization Flag)

The HOCOSF flag indicates the operating status of the counter that measures the wait time for the high-speed clock oscillator (HOCO). When OFS1.HOCOEN is set to 0, confirm that OSCSF.HOCOSF is set to 1 before using the HOCO clock.

[Setting condition]

- When the HOCO clock is stopped and the HOCOCR.HCSTP bit is set to 0, and then the HOCO oscillation stabilization time is counted by the MOCO clock and supply of the HOCO clock within the MCU is started. For the HOCO oscillation stabilization time, see section 43, Electrical Characteristics.

[Clearing condition]

- When the HOCO clock is operating and then is deactivated because the HOCOCR.HCSTP bit is set to 1.

MOSCSF flag (Main Clock Oscillation Stabilization Flag)

The MOSCSF flag indicates the operating status of the counter that measures the wait time for the main clock oscillator.

[Setting condition]

- When the main clock oscillator is stopped and the MOSCCR.MOSTP bit is set to 0, and then the number of MOCO clock cycles corresponding to the setting of the MOSCWTCR register is counted and supply of the main clock within the MCU is started.

[Clearing condition]

- When the main clock oscillator is operating and then is deactivated because the MOSCCR.MOSTP bit is set to 1.

PLLSF flag (PLL Clock Oscillation Stabilization Flag)

The PLLSF flag indicates the operating state of the counter that measures the wait time of the PLL.

[Setting condition]

- When the PLL is stopped and the PLLCR.PLLSTP bit is set to 0, and then the PLL oscillation stabilization time is counted by the MOCO clock and supply of the PLL clock within the MCU is started. If oscillation by the PLL clock source is not stable when the PLLCR.PLLSTP bit is set to 0, counting of the MOCO cycles continues even after the PLL clock source oscillation is stabilized. For the PLL oscillation stabilization time, see section 43, Electrical Characteristics.

[Clearing condition]

- When the PLL is operating and then is deactivated because the PLLCR.PLLSTP bit is set to 1.

PLLRTCSF flag (PLL_RTC Clock Oscillation Stabilization Flag)

The PLLRTCSF flag indicates the state of operation of the counter that measures the waiting time for the PLL_RTC.

[Setting condition]

- After the PLL_RTC stops and the PLLRTCCR.PLLRTCSTP bit is set to 0, supply of the PLL_RTC clock in the MCU starts after 328 cycles of the sub-clock oscillator are counted.

[Clearing condition]

- After the PLL_RTC has started to operate and the PLLRTCCR.PLLRTCSTP bit has been set to 1, deactivation of the PLL_RTC is completed.

8.2.16 OSTDCR : Oscillation Stop Detection Control Register

Base address: SYSC = 0x4001_E000

Offset address: 0x040

Bit position:	7	6	5	4	3	2	1	0
Bit field:	OSTDE	—	—	—	—	—	—	OSTDIE
Value after reset:	0	0	0	0	0	0	0	0

Bit	Symbol	Function	R/W
0	OSTDIE	Oscillation Stop Detection Interrupt Enable 0: Disable oscillation stop detection interrupt (do not notify the POEG) 1: Enable oscillation stop detection interrupt (notify the POEG)	R/W
6:1	—	These bits are read as 0. The write value should be 0.	R/W
7	OSTDE	Oscillation Stop Detection Function Enable 0: Disable oscillation stop detection function 1: Enable oscillation stop detection function	R/W

Note: Set the PRCR.PRC0 bit to 1 (write enabled) before rewriting this register.

Note: If the security attribution is configured as Secure:
- Secure access and Non-secure read access are allowed
- Non-secure write access is ignored, and TrustZone access error is not generated.

If the security attribution is configured as Non-secure:
- Secure and Non-secure access are allowed.

The OSTDCR register controls the oscillation stop detection function.

OSTDIE bit (Oscillation Stop Detection Interrupt Enable)

The OSTDIE bit enables the oscillation stop detection function interrupt. It also controls whether oscillation stop detection is reported to the POEG.

If the Oscillation Stop Detection flag in the Oscillation Stop Detection Status Register (OSTDSR.OSTDF) requires clearing, set the OSTDIE bit to 0 before clearing OSTDF. Wait for at least 2 PCLKB cycles before setting the OSTDIE bit to 1. By reading the I/O register whose access cycle number is defined by PCLKB, it is possible to secure waiting time of 2 or more cycles of PCLKB.

OSTDE bit (Oscillation Stop Detection Function Enable)

The OSTDE bit enables the oscillation stop detection function.

When the OSTDE bit is 1 (enabled), the MOCO stop bit (MOCOCR.MCSTP) is set to 0 and the MOCO operation starts. The MOCO clock cannot be stopped while the oscillation stop detection function is enabled. Writing 1 to the MOCOCR.MCSTP bit (MOCO stopped) is invalid.

When the Oscillation Stop Detection flag in the Oscillation Stop Detection Status Register (OSTDSR.OSTDF) is 1 (main clock oscillation stop detected), writing 0 to the OSTDE bit is invalid.

The OSTDE bit must be set to 0 before transitioning to Software Standby mode. To transition to Software Standby mode, first set the OSTDE bit to 0, then execute the WFI instruction.

The following restrictions apply when using the oscillation stop detection function:

In low-speed mode, selecting division by 1, 2, 4, 8 for ICLK, FCLK, PCLKA, PCLKB, PCLKC, and PCLKD is prohibited.

8.2.17 OSTDSR : Oscillation Stop Detection Status Register

Base address: SYSC = 0x4001_E000

Offset address: 0x041

Bit position:	7	6	5	4	3	2	1	0
Bit field:	—	—	—	—	—	—	—	OSTDF
Value after reset:	0	0	0	0	0	0	0	0

Bit	Symbol	Function	R/W
0	OSTDF	Oscillation Stop Detection Flag 0: Main clock oscillation stop not detected 1: Main clock oscillation stop detected	R/W*1
7:1	—	These bits are read as 0. The write value should be 0.	R/W

Note: Set the PRCR.PRC0 bit to 1 (write enabled) before rewriting this register.
Note: If the security attribution is configured as Secure:
- Secure access and Non-secure read access are allowed
- Non-secure write access is ignored, and TrustZone access error is not generated.

If the security attribution is configured as Non-secure:
- Secure and Non-secure access are allowed.

Note 1. This bit can only be set to 0. This bit is cleared to 0 by writing 0 after reading it as 1.

The OSTDSR register indicates the stop detection status of the main clock oscillator.

OSTDF flag (Oscillation Stop Detection Flag)

The OSTDF flag indicates the main clock oscillator status. When this flag is 1, it indicates that the main clock oscillation stop was detected. After this stop is detected, the OSTDF flag is not set to 0 even when the main clock oscillation is restarted. The OSTDF bit is cleared to 0 by writing 0 after reading it as 1.

At least 3 ICLK cycles of wait time are required between writing 0 to OSTDF and reading it as 0. If the OSTDF flag is set to 0 when the main clock oscillation is stopped, the OSTDF flag becomes 0 then returns to 1.

The OSTDF flag cannot be set to 0 under the following conditions:

- SCKSCR.CKSEL[2:0] = 011b (system clock source = MOSC)

- PLLCCR.PLSRCSEL = 0 (PLL source clock = MOSC) and SCKSCR.CKSEL[2:0] = 101b (System clock source = PLL)

The OSTDF flag must be set to 0 after switching the clock source to sources other than the main clock oscillator and PLL.

[Setting condition]

- The main clock oscillator is stopped when OSTDCR.OSTDE = 1 (oscillation stop detection function enabled).

[Clearing condition]

When writing 0 after reading 1. However, it is not 0 under the following conditions.

- SCKSCR.CKSEL[2:0] = 011b (system clock source = MOSC)
- PLLCCR.PLSRCSEL = 0 (PLL source clock = MOSC) and SCKSCR.CKSEL[2:0] = 101b (System clock source =PLL).

8.2.18 SOSTDCR : Sub-Clock Oscillation Stop Detection Control Register

Base address: SYSC = 0x4001_E000

Offset address: 0x042

Bit position:	15	14	13	12	11	10	9	8	7	6	5	4	3	2	1	0
Bit field:	SOSDCE	SOSDCF	SOSTDF	SOSTDIE	SOSDCCMP[11:0]											
Value after reset:	0	0	0	0	1	1	1	1	1	1	1	1	1	1	1	1

Bit	Symbol	Function	R/W
11:0	SOSDCCMP[11:0]	Sub-Clock Oscillation Stop Detection Time 0x004: Detection time = 5 cycles ⋮ 0xFFF: Detection time = 4096 cycles Others: Setting prohibited	R/W
12	SOSTDIE	Sub-Clock Oscillation Stop Detection Interrupt Enable 0: Disable sub-clock oscillation stop detection interrupt 1: Enable sub-clock oscillation stop detection interrupt	R/W
13	SOSTDF	Sub-Clock Oscillation Stop Detection Flag 0: Sub-clock oscillation stop not detected 1: Sub-clock oscillation stop detected	R
14	SOSDCF	Status of Sub-Clock Oscillation Stop Detector Operation 0: Stop operation of the sub-clock oscillation stop detector 1: Run operation of the sub-clock oscillation stop detector	R
15	SOSDCE	Control of Sub-Clock Oscillation Stop Detector Operation 0: Stop operation of the sub-clock oscillation stop detector 1: Start operation of the sub-clock oscillation stop detector	R/W

Note: If the security attribution is configured as Secure:
- Secure access and Non-secure read access are allowed
- Non-secure write access is ignored, and TrustZone access error is not generated.

If the security attribution is configured as Non-secure:
- Secure and Non-secure access are allowed.

Note: Set the PRCR.PRC0 bit to 1 (write enabled) before rewriting this register.

Note: Sub-clock oscillation stop detection function is disabled when low power consumption clock mode (RCR4.ROPSEL = 1) and Software Standby mode.

Note: SOSTDCR register supports only 16-bit access.

SOSDCCMP[11:0] bits (Sub-Clock Oscillation Stop Detection Time)

The SOSDCCMP[11:0] bits specify the oscillation stop detection time. It is detected that oscillation has stopped when oscillation has been stopped for (A - 2) to (A + 1) clock cycles, where A refers to the time specified by these bits. Oscillation stop detection time = Low-speed on-chip oscillator clock (LOCO) cycle × ((value of SOSDCCMP11 to SOSDCCMP0) + 1).

SOSTDIE bit (Sub-Clock Oscillation Stop Detection Interrupt Enable)

The SOSTDIE bit enables or disables the sub-clock oscillation stop detection function interrupt.

SOSTDF bit (Sub-Clock Oscillation Stop Detection Flag)

The SOSTDF bit is a flag to indicate the sub-clock status. When the SOSTDF flag is 1, it indicates that the sub-clock oscillation stop has been detected. When the MSTPCRA.MSTPA16 is set to 1, the SOSTDF flag is cleared.

SOSDCF bit (Status of Sub-Clock Oscillation Stop Detector Operation)

The SOSDCF bit indicates the operation status of the sub-clock oscillation stop detection function. After writing 1 to the SOSDCE bit, it becomes 1 synchronously with LOCO. If the SOSDCE bit is written to 0, it goes to 0 asynchronously to LOCO.

SOSDCE bit (Control of Sub-Clock Oscillation Stop Detector Operation)

The SOSDCE bit enables the sub-clock oscillation stop detection function.

When the SOSDCE bit is 1 (enabled) the LOCO stop bit is set to 0 and the LOCO operation starts.

The LOCO clock cannot be stopped while the sub-clock oscillation stop detection function is enabled. Writing 1 to the LOCOCR.LCSTP bit (LOCO stopped) is invalid. If the sub-clock oscillation stop detection function is enabled, it operates even during Software Standby mode.

8.2.19 MOSCWTCR : Main Clock Oscillator Wait Control Register

Base address: SYSC = 0x4001_E000

Offset address: 0x0A2

Bit position:	7	6	5	4	3	2	1	0
Bit field:	—	—	—	—	MSTS[3:0]			
Value after reset:	0	0	0	0	0	1	0	1

Bit	Symbol	Function	R/W
3:0	MSTS[3:0]	Main Clock Oscillator Wait Time Setting 0x0: Wait time = 2 cycles (0.25 μs) 0x1: Wait time = 1024 cycles (128 μs) 0x2: Wait time = 2048 cycles (256 μs) 0x3: Wait time = 4096 cycles (512 μs) 0x4: Wait time = 8192 cycles (1024 μs) 0x5: Wait time = 16384 cycles (2048 μs) 0x6: Wait time = 32768 cycles (4096 μs) 0x7: Wait time = 65536 cycles (8192 μs) 0x8: Wait time = 131072 cycles (16384 μs) 0x9: Wait time = 262144 cycles (32768 μs) Others: Setting prohibited	R/W
7:4	—	These bits are read as 0. The write value should be 0.	R/W

Note: Set the PRCR.PRC0 bit to 1 (write enabled) before rewriting this register.

Note: If the security attribution is configured as Secure:
- Secure access and Non-secure read access are allowed
- Non-secure write access is ignored, and TrustZone access error is not generated.

If the security attribution is configured as Non-secure:
- Secure and Non-secure access are allowed.

MSTS[3:0] bits (Main Clock Oscillator Wait Time Setting)

The MSTS[3:0] bits specify the oscillation stabilization time for the main clock oscillator.

Set the main clock oscillation stabilization time to a period longer than or equal to the stabilization time recommended by the oscillator manufacturer. When the main clock is input externally, set these bits to 0x0 because the oscillation stabilization time is not required.

The wait time set in these bits is counted using: 1 cycle (μs) = 1 / (fMOCO [MHz]) = 1/8 = 0.125 (μs) (typ.) The MOCO clock automatically oscillates when necessary, regardless of the value of the MOCOCR.MCSTP bit. After the specified

wait time elapses, supply of the main clock starts internally in the MCU, and the OSCSF.MOSCSF flag is set to 1. If the specified wait time is short, supply of the main clock starts before oscillation of the clock becomes stable.

Only rewrite the MOSCWTCR register when the MOSCCR.MOSTP bit is 1 and the OSCSF.MOSCSF flag is 0. Do not rewrite this register under any other conditions.

8.2.20 MOMCR : Main Clock Oscillator Mode Oscillation Control Register

Base address: SYSC = 0x4001_E000

Offset address: 0x413

Bit position:	7	6	5	4	3	2	1	0
Bit field:	—	MOSEL	—	—	MODRV1	—	—	—
Value after reset:	0	0	0	0	0	0	0	0

Bit	Symbol	Function	R/W
2:0	—	These bits are read as 0. The write value should be 0.	R/W
3	MODRV1	Main Clock Oscillator Drive Capability 1 Switching 0: 10 MHz to 20 MHz 1: 1 MHz to 10 MHz	R/W
5:4	—	These bits are read as 0. The write value should be 0.	R/W
6	MOSEL	Main Clock Oscillator Switching 0: Resonator 1: External clock input	R/W
7	—	These bits are read as 0. The write value should be 0.	R/W

Note: If the security attribution is configured as Secure:
- Secure access and Non-secure read access are allowed
- Non-secure write access is ignored, and TrustZone access error is not generated.

If the security attribution is configured as Non-secure:
- Secure and Non-secure access are allowed.

Note: The EXTAL/XTAL pins are also used as ports. In the initial state, the pin is set as a port.
Note: The MOSCCR.MOSTP bit must be 1 (MOSC is stopped) before changing this register.
Note: Set the PRCR.PRC0 bit to 1 (write enabled) before rewriting this register.

MODRV1 bit (Main Clock Oscillator Drive Capability 1 Switching)

The MODRV1 bit switches the drive capability of the main clock oscillator.

MOSEL bit (Main Clock Oscillator Switching)

The MOSEL bit switches the source for the main clock oscillator.

8.2.21 SOMCR : Sub-Clock Oscillator Mode Control Register

Base address: SYSC = 0x4001_E000

Offset address: 0x481

Bit position:	7	6	5	4	3	2	1	0
Bit field:	—	—	—	EXCLKS	—	—	SODRV[1:0]	
Value after reset:	0	0	0	0*1	0	0	0*1	0*1

Bit	Symbol	Function	R/W
1:0	SODRV[1:0]	Sub-Clock Oscillator Drive Capability Switching 0 0: Normal mode 0 1: Low power mode 1 1 0: Low power mode 2 1 1: Low power mode 3	R/W

Bit	Symbol	Function	R/W
3:2	—	These bits are read as 0. The write value should be 0.	R/W
4	EXCLKS	Sub Clock Oscillator Mode Function Switching 0: Oscillation mode 1: External clock input mode	R/W
7:5	—	These bits are read as 0. The write value should be 0.	R/W

Note: If the security attribution is configured as Secure:
- Secure access and Non-secure read access are allowed
- Non-secure write access is ignored, and TrustZone access error is not generated.

If the security attribution is configured as Non-secure:
- Secure and Non-secure access are allowed.

Note: Set the PRCR.PRC0 bit to 1 (write enabled) before rewriting this register.
Note: The SOSCCR.SOSTP bit must be 1 (SOSC is stopped) before changing this register.
Note 1. This bit is only initialized at VRTC_POR.

SODRV[1:0] bits (Sub-Clock Oscillator Drive Capability Switching)

The SODRV[1:0] bits switch the drive capability of the sub-clock oscillator. The relationship between the drive capability and the setting value is as follows:

Normal mode > Low power mode 1 > Low power mode 2 > Low power mode 3.

EXCLKS bit (Sub Clock Oscillator Mode Function Switching)

The EXCLKS bit switches the mode function of the sub-clock oscillator.

8.2.22 SOMRG : Sub-Clock Oscillator Margin Check Register

Base address: SYSC = 0x4001_E000

Offset address: 0x482

Bit position:	7	6	5	4	3	2	1	0
Bit field:	—	—	—	—	—	—	SOSCMRG[1:0]	
Value after reset:	0	0	0	0	0	0	0	0

Bit	Symbol	Function	R/W
1:0	SOSCMRG[1:0]	Sub Clock Oscillator Margin check Switching 0 0: Normal current 0 1: Lower margin check 1 0: Upper margin check 1 1: Setting prohibited	R/W
7:2	—	These bits are read as 0. The write value should be 0.	R/W

SOSCMRG[1:0] bits (Sub Clock Oscillator Margin check Switching)

The SOSCMRG[1:0] bits control the amp current in the SOSC for oscillation margin check.

8.2.23 SLCDSCKCR : Segment LCD Source Clock Control Register

Base address: SYSC = 0x4001_E000

Offset address: 0x050

Bit position:	7	6	5	4	3	2	1	0
Bit field:	LCDS CKEN	—	—	—	—	LCDSCKSEL[2:0]		
Value after reset:	0	0	0	0	0	0	0	0

Bit	Symbol	Function	R/W
2:0	LCDSCKSEL[2:0]	Segment LCD Source Clock (LCDSRCCLK) Select 0 0 0: LOCO 0 0 1: SOSC 0 1 0: MOSC 1 0 0: HOCO Others: Setting prohibited	R/W
6:3	—	These bits are read as 0. The write value should be 0.	R/W
7	LCDSCKEN	Segment LCD Source Clock (LCDSRCCLK) Out Enable 0: Segment LCD source clock out is disabled 1: Segment LCD source clock out is enabled	R/W

Note: If the security attribution is configured as Secure:
- Secure access and Non-secure read access are allowed
- Non-secure write access is ignored, and TrustZone access error is not generated.

If the security attribution is configured as Non-secure:
- Secure and Non-secure access are allowed.

Note: Setting the LCDSCKEN bit and LCDSCKSEL[2:0] bits at the same time is prohibited.
Note: Set the PRCR.PRC0 bit to 1 (write enabled) before rewriting this register.

LCDSCKSEL[2:0] bits (Segment LCD Source Clock (LCDSRCCLK) Select)

The LCDSCKSEL[2:0] bits select the LOCO, SOSC, MOSC, or HOCO clock as the segment LCD source clock. Clear the LCDSCKEN bit to 0 when changing the segment LCD source clock.

When changing these bits, use the following steps:

1. Set LCDSCKEN to 0 (segment LCD source clock out is disabled).
2. Wait for 3 segment LCD source clock cycles and 2 ICLK cycles before the change.
3. Write the changed value to LCDSCKSEL[2:0] bits.
4. Read LCDSCKSEL[2:0] bits to confirm that the LCDSCKSEL[2:0] bits are changed.

LCDSCKEN bit (Segment LCD Source Clock (LCDSRCCLK) Out Enable)

The LCDSCKEN bit enables output of the segment LCD source clock to segment LCD module.

When this bit is set to 1, the selected clock is output. When changing this bit, confirm that the segment LCD source clock selected by the LCDSCLKSEL[2:0] bits is stable.

When transitioning to Software Standby mode after changing this bit, use the following steps:

1. Change this bit.
2. Wait for at least 2 cycles of the source clock selected in the LCDSCKSEL[2:0] bits.
3. Execute the WFI instruction.

When stopping the source clock selected in the LCDSCKSEL[2:0] bits after clearing this bit to 0, use the following steps:

1. Clear this bit to 0 (LCD source clock output is disabled).
2. Wait for at least 2 cycles of the source clock selected by the LCDSCKSEL[2:0] bits.
3. Stop the source clock selected by the LCDSCKSEL[2:0] bits.

8.2.24 CKOCR : Clock Out Control Register

Base address: SYSC = 0x4001_E000

Offset address: 0x03E

Bit position:	7	6	5	4	3	2	1	0
Bit field:	CKOEN	CKODIV[2:0]			—	CKOSEL[2:0]		
Value after reset:	0	0	0	0	0	0	0	0

Bit	Symbol	Function	R/W
2:0	CKOSEL[2:0]	Clock Out Source Select 0 0 0: HOCO (value after reset) 0 0 1: MOCO 0 1 0: LOCO 0 1 1: MOSC 1 0 0: SOSC Others: Setting prohibited	R/W
3	—	This bit is read as 0. The write value should be 0.	R/W
6:4	CKODIV[2:0]	Clock Output Frequency Division Ratio 0 0 0: × 1/1 0 0 1: × 1/2 0 1 0: × 1/4 0 1 1: × 1/8 1 0 0: × 1/16 1 0 1: × 1/32 1 1 0: × 1/64 1 1 1: × 1/128	R/W
7	CKOEN	Clock Out Enable 0: Disable clock out 1: Enable clock out	R/W

Note: Set the PRCR.PRC0 bit to 1 (write enabled) before rewriting this register.
Note: If the security attribution is configured as Secure:
- Secure access and Non-secure read access are allowed
- Non-secure write access is ignored, and TrustZone access error is not generated.

If the security attribution is configured as Non-secure:
- Secure and Non-secure access are allowed.

CKOSEL[2:0] bits (Clock Out Source Select)

The CKOSEL[2:0] bits select the source of the clock to be output from the CLKOUT pin. When changing the clock source, set the CKOEN bit to 0.

CKODIV[2:0] bits (Clock Output Frequency Division Ratio)

The CKODIV[2:0] bits specify the clock division ratio. Set the CKOEN bit to 0 when changing the division ratio.

CKOEN bit (Clock Out Enable)

The CKOEN bit enables output from the CLKOUT pin.

When this bit is set to 1, the selected clock is output. When this bit is set to 0, low is output. When changing this bit, confirm that the clock out source clock selected in the CKOSEL[2:0] bits is stable. When changing this bit, a glitch may be generated in the output.

Clear this bit before entering Software Standby mode if the selecting clock out source clock is stopped in that mode.

8.2.25 LOCOUTCR : LOCO User Trimming Control Register

Base address: SYSC = 0x4001_E000

Offset address: 0x492

Bit position:	7	6	5	4	3	2	1	0
Bit field:	LOCOUTRM[7:0]							
Value after reset:	0	0	0	0	0	0	0	0

Bit	Symbol	Function	R/W
7:0	LOCOUTRM[7:0]	LOCO User Trimming 0x80: -128 0x81: -127 ⋮ 0xFF: -1 0x00: Center Code 0x01: +1 ⋮ 0x7E: +126 0x7F: +127	R/W

Note: If the security attribution is configured as Secure:
- Secure access and Non-secure read access are allowed
- Non-secure write access is ignored, and TrustZone access error is not generated.

If the security attribution is configured as Non-secure:
- Secure and Non-secure access are allowed.

Note: Set the PRCR.PRC0 bit to 1 (write enabled) before rewriting this register.

The LOCOUTCR register is added to the original LOCO trimming data.

MCU operation is not guaranteed when LOCOUTCR is set to a value that causes the LOCO frequency to be outside of the specification range. When LOCOUTCR is modified, the frequency stabilization time corresponds to the frequency stabilization time at the start of MCU operation. When the ratio of the LOCO frequency and the other oscillation frequency is an integer value, changing the LOCOUTCR value is prohibited.

Changing LOCOUTCR during RTC operation is prohibited.

8.2.26 MOCOUTCR : MOCO User Trimming Control Register

Base address: SYSC = 0x4001_E000

Offset address: 0x061

Bit position:	7	6	5	4	3	2	1	0
Bit field:	MOCOUTRM[7:0]							
Value after reset:	0	0	0	0	0	0	0	0

Bit	Symbol	Function	R/W
7:0	MOCOUTRM[7:0]	MOCO User Trimming 0x80: -128 0x81: -127 ⋮ 0xFF: -1 0x00: Center Code 0x01: +1 ⋮ 0x7E: +126 0x7F: +127	R/W

Note: If the security attribution is configured as Secure:
- Secure access and Non-secure read access are allowed
- Non-secure write access is ignored, and TrustZone access error is not generated.

If the security attribution is configured as Non-secure:
- Secure and Non-secure access are allowed.

Note: Set the PRCR.PRC0 bit to 1 (write enabled) before rewriting this register.

The MOCOUTCR register is added to the original MOCO trimming data.

MCU operation is not guaranteed when MOCOUTCR is set to a value that causes the MOCO frequency to be outside of the specification range. When MOCOUTCR is modified, the frequency stabilization wait time corresponds to the frequency stabilization wait time at the start of the MCU operation. When the ratio of the MOCO frequency and the other oscillation frequency is an integer value, changing the MOCOUTCR value is prohibited.

8.2.27 HOCOUTCR : HOCO User Trimming Control Register

Base address: SYSC = 0x4001_E000

Offset address: 0x062

Bit position:	7	6	5	4	3	2	1	0
Bit field:	HOCOUTRM[7:0]							
Value after reset:	0	0	0	0	0	0	0	0

Bit	Symbol	Function	R/W
7:0	HOCOUTRM[7:0]	HOCO User Trimming 0x80: -128 0x81: -127 ⋮ 0xFF: -1 0x00: Center Code 0x01: +1 ⋮ 0x7E: +126 0x7F: +127	R/W

Note: If the security attribution is configured as Secure:
- Secure access and Non-secure read access are allowed
- Non-secure write access is ignored, and TrustZone access error is not generated.

If the security attribution is configured as Non-secure:
- Secure and Non-secure access are allowed.

Note: Set the PRCR.PRC0 bit to 1 (write enabled) before rewriting this register.

The HOCOUTCR register is added to the original HOCO trimming data.

MCU operation is not guaranteed when HOCOUTCR is set to a value that causes the HOCO frequency to be outside of the specification range. When HOCOUTCR is modified, the frequency stabilization wait time corresponds to the frequency stabilization wait time at the start of the MCU operation.

8.2.28 CANFDCKDIVCR : CANFD Clock Division Control Register

Base address: SYSC = 0x4001_E000

Offset address: 0x06E

Bit position:	7	6	5	4	3	2	1	0
Bit field:	—	—	—	—	—	CANFDCKDIV[2:0]		
Value after reset:	0	0	0	0	0	0	0	0

Bit	Symbol	Function	R/W
2:0	CANFDCKDIV[2:0]	CANFD clock (CANFDCLK) Division Select 0 0 0: /1 (value after reset) 0 0 1: /2 0 1 0: /4 0 1 1: /6 1 0 0: /8 Others: Setting prohibited	R/W
7:3	—	These bits are read as 0. The write value should be 0.	R/W

Note: If the security attribution is configured as Secure:
- Secure access and Non-secure read access are allowed
- Non-secure write access is ignored, and TrustZone access error is not generated.

If the security attribution is configured as Non-secure:
- Secure and Non-secure access are allowed.

Note: Set the PRCR.PRC0 bit to 1 (write enabled) before rewriting this register.

CANFDCKDIVCR controls the CANFD clock (CANFDCLK).

CANFDCKDIV[2:0] bits (CANFD clock (CANFDCLK) Division Select)

The CANFDCKDIV[2:0] bits select the frequency of the CANFD clock (CANFDCLK). These bits must be modified when CANFDCKCR.CANFDCKSRDY = 1.

When switching the division ratio setting from n (n ≠ 1), set MSTPCRC.MSTPC27 = 1 before setting CANFDCKCR.CANFDCKSREQ = 1.

8.2.29 CANFDCKCR : CANFD Clock Control Register

Base address: SYSC = 0x4001_E000

Offset address: 0x076

Bit position:	7	6	5	4	3	2	1	0
Bit field:	CANFDCKSRDY	CANFDCKSREQ	—	—	—	CANFDCKSEL[2:0]		
Value after reset:	0	0	0	0	0	0	0	1

Bit	Symbol	Function	R/W
2:0	CANFDCKSEL[2:0]	CANFD clock (CANFDCLK) Source Select 0 0 0: HOCO 0 0 1: MOCO (value after reset) 0 1 0: LOCO 0 1 1: Main clock oscillator 1 0 0: Sub-clock oscillator 1 0 1: PLL Others: Setting prohibited	R/W
5:3	—	These bits are read as 0. The write value should be 0.	R/W
6	CANFDCKSREQ	CANFD clock (CANFDCLK) Switching Request 0: No request 1: Request switching	R/W
7	CANFDCKSRDY	CANFD clock (CANFDCLK) Switching Ready State Flag 0: Switching not possible 1: Switching possible	R

Note: If the security attribution is configured as Secure:
- Secure access and Non-secure read access are allowed
- Non-secure write access is ignored, and TrustZone access error is not generated.

If the security attribution is configured as Non-secure:
- Secure and Non-secure access are allowed.

Note: Set the PRCR.PRC0 bit to 1 (write enabled) before rewriting this register.

The CANFDCKCR register controls the CANFD clock (CANFDCLK).

When switching the clock source, ensure that the clock before the switch and the clock after the switch generate stable output. To change the set value of CANFDCKDIVCR.CANFDCKDIV[2:0] and CANFDCKSEL[2:0], use the following procedure:

1. Write 1 to MSTPCRC.MSTPC27 (only when switching the division ratio setting from n (n ≠ 1))
2. Wait for two CANFDCLK (only when switching the division ratio setting from n (n ≠ 1))
3. Write 1 to CANFDCKSREQ.
4. Poll until CANFDCKSRDY is read as 1. While CANFDCKSRDY = 1, no clock is output to CANFDCLK.
5. Write to CANFDCKDIVCR.CANFDCKDIV[2:0] and CANFDCKSEL[2:0].
6. Write 0 to CANFDCKSREQ.
7. Poll until CANFDCKSRDY is read as 0.
8. When CANFDCKSRDY becomes 0, CANFDCLK starts to output. Clock switching is complete.

When transitioning to Software Standby mode, do not execute the WFI instruction while performing clock switching. That is, do not execute the WFI instruction when CANFDCKSREQ = 1 and CANFDCKSRDY = 0, or when CANFDCKSREQ = 0 and CANFDCKSRDY = 1.

CANFDCKSEL[2:0] bits (CANFD clock (CANFDCLK) Source Select)

The CANFDCKSEL[2:0] bits select the clock source of the CANFD clock (CANFDCLK) and must be modified when CANFDCKCR.CANFDCKSRDY = 1.

CANFDCKSREQ bit (CANFD clock (CANFDCLK) Switching Request)

The CANFDCKSREQ bit selects the CANFDCLK switching request.

CANFDCKSRDY flag (CANFD clock (CANFDCLK) Switching Ready State Flag)

The CANFDCKSRDY flag indicates the state of switching ready for the CANFDCLK. When CANFDCKSRDY = 1, no clock is output to CANFDCLK.

8.3 Main Clock Oscillator

To supply the clock signal to the main clock oscillator, use one of the following ways:

- Connect an oscillator
- Connect the input of an external clock signal.

8.3.1 Connecting a Crystal Resonator

Figure 8.4 shows an example of connecting a crystal resonator. A damping resistor (Rd) can be added, if required.

Because the resistor values vary according to the resonator and the oscillation drive capability, use values recommended by the resonator manufacturer. If the manufacturer recommends using an external feedback resistor (Rf), insert an Rf between EXTAL and XTAL by following the instructions.

When connecting a resonator to supply the clock, the frequency of the resonator must be in the frequency range of the resonator for the main clock oscillator as described in Table 8.1.

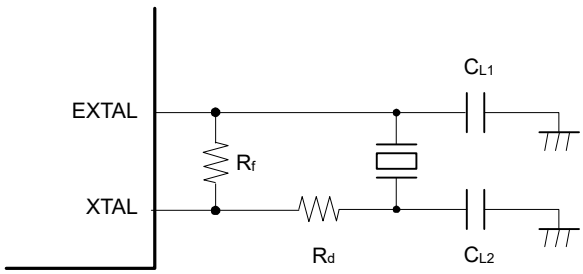

Figure 8.4 Example of crystal resonator connection

Figure 8.5 shows an equivalent circuit of the crystal resonator.

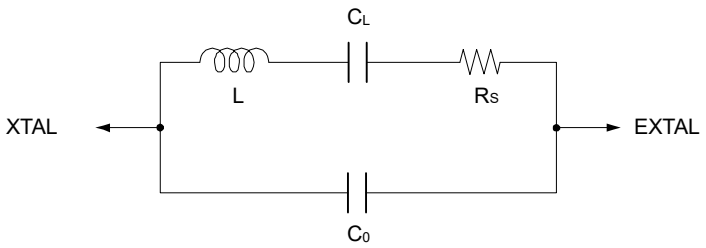

Figure 8.5 Equivalent circuit of the crystal resonator

8.3.2 External Clock Input

Figure 8.6 shows an example of connecting an external clock input. To operate the oscillator with an external clock signal, set the MOMCR.MOSEL bit to 1. The XTAL pin becomes high impedance.

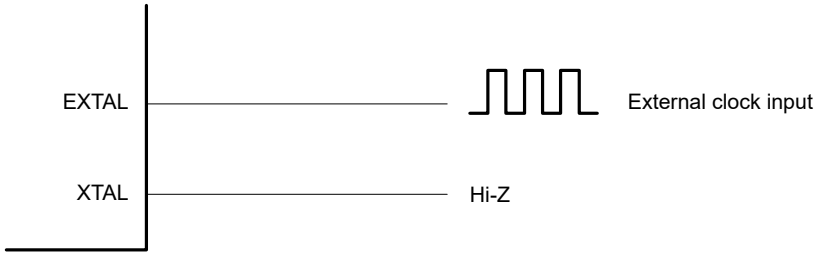

Figure 8.6 Equivalent circuit for external clock

8.3.3 Notes on External Clock Input

The frequency of the external clock input can only be changed when the main clock oscillator is stopped. Do not change the frequency of the external clock input when the setting of the Main Clock Oscillator Stop bit (MOSCCR.MOSTP) is 0.

8.4 Sub-Clock Oscillator

The only way of supplying a clock signal to the sub-clock oscillator is by connecting a crystal oscillator.

8.4.1 Connecting a 32.768-kHz Crystal Resonator

To supply a clock to the sub-clock oscillator, connect a 32.768-kHz crystal resonator as shown in Figure 8.7. A damping resistor (Rd) can be added, if necessary. Because the resistor values vary according to the resonator and the oscillation drive capability, use values recommended by the resonator manufacturer. If the resonator manufacturer recommends the use of an external feedback resistor (Rf), insert an Rf between XCIN and XCOUT by following the instructions. When connecting a resonator to supply the clock, the frequency of the resonator must be in the frequency range of the resonator for the sub-clock oscillator as described in Table 8.1.

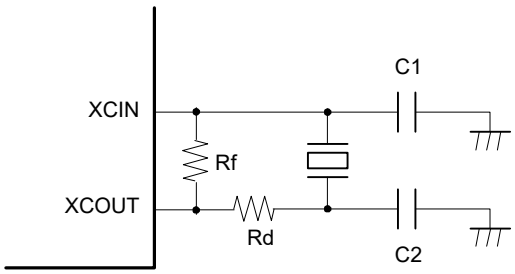

Figure 8.7 Connection example of 32.768-kHz crystal resonator

Figure 8.8 shows an equivalent circuit for the 32.768-kHz crystal resonator.

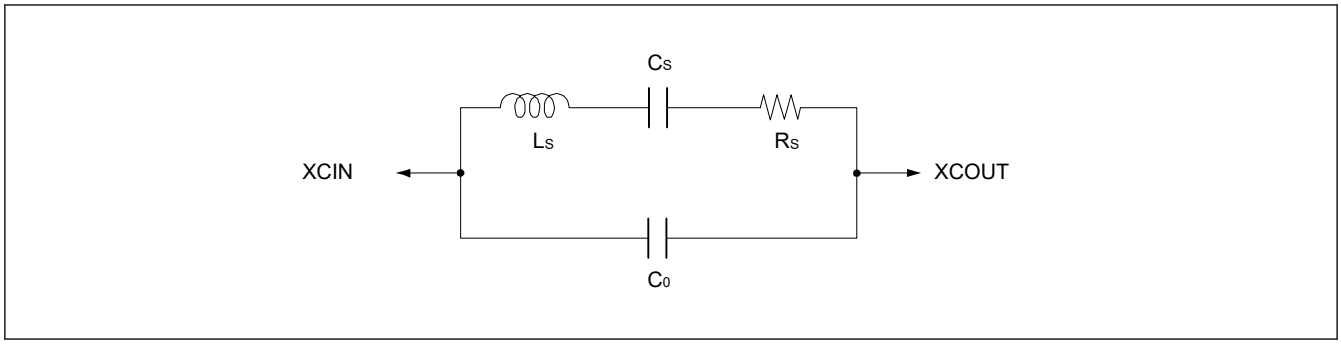

Figure 8.8 Equivalent circuit for the 32.768-kHz crystal resonator

8.4.2 External Clock Input

Figure 8.9 shows an example of connection of external sub-clock input. External sub-clock input should be from the XCOUT pin, and the XCIN pin should be open-circuit.

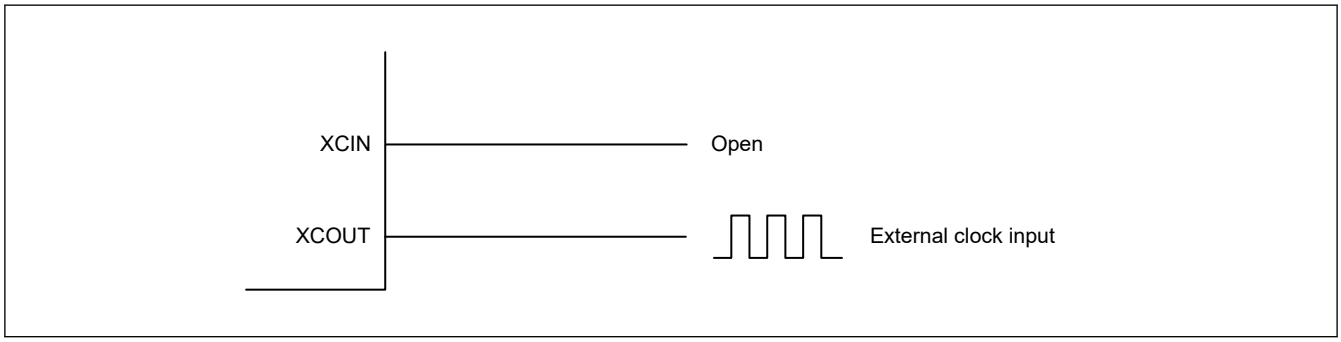

Figure 8.9 Equivalent circuit for external clock

8.4.3 Notes on the External Clock Input

The frequency of the external sub-clock input is allowed only 32.768 KHz. Setting for external sub-clock input can be allowed only when the sub-clock oscillator is stopped.

8.4.4 Pin Handling When the Sub-Clock Oscillator Is Not Used

When the sub-clock oscillator is not in use, connect the XCIN pin to VSS through a resistor (to pull VSS down) and leave the XCOUT pin open as shown in Figure 8.10. In addition, if an oscillator is not connected, set the Sub-Clock Oscillator Stop bit (SOSCCR.SOSTP) to 1 to stop the oscillator.

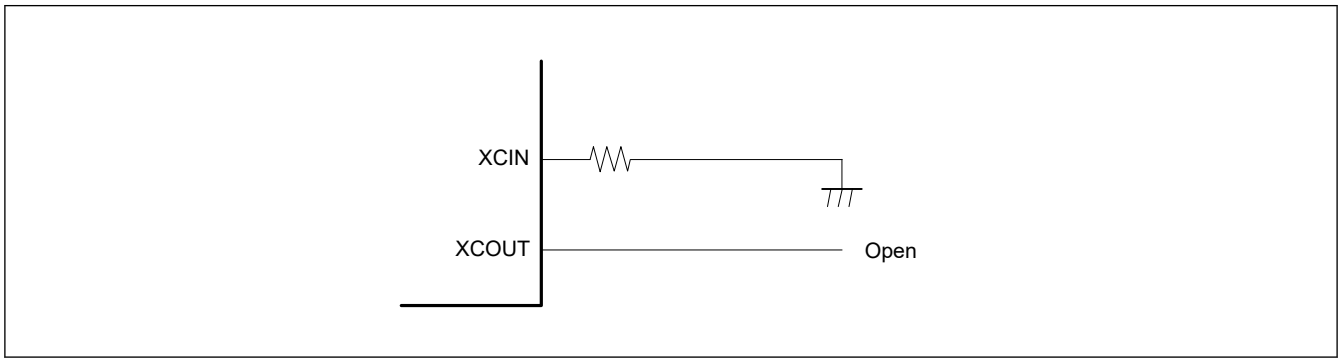

Figure 8.10 Pin handling when the sub-clock oscillator is not used

8.5 Oscillation Stop Detection Function

8.5.1 Oscillation Stop Detection and Operation after Detection

The oscillation stop detection function detects the main clock oscillator stop. When oscillation stop is detected, the system clock switches as follows:

- If an oscillation stop is detected with SCKSCR.CKSEL[2:0] = 011b (system clock source = MOSC), the system clock source switches to the MOCO clock.
- If an oscillation stop is detected with PLLCCR.PLSRCSEL = 0 (PLL source clock = MOSC) and SCKSCR.CKSEL[2:0] = 101b (system clock source = PLL), PLL clock remains the system clock source. However, the frequency becomes a free-running oscillation frequency.

An oscillation stop detection interrupt request can be generated when an oscillation stop is detected. In addition, the General PWM Timer (GPT) output can be forced to a high-impedance state on detection.

The main clock oscillation stop is detected when the input clock remains at 0 or 1 for a certain period, for example, when a malfunction occurs in the main clock oscillator. See section 43, Electrical Characteristics.

Switching between the main clock oscillator and the MOCO clock or between the PLL clock and PLL free-running clock is controlled by the Oscillation Stop Detection Flag (OSTDSR.OSTDF).

OSTDF controls the switched clock as follows:

- When SCKSCR.CKSEL[2:0] = 011b (system clock source = MOSC):
  - When OSTDF changes from 0 to 1, the clock source switches to the MOCO clock.
  - When OSTDF changes from 1 to 0, the clock source switches back to MOSC.
- When PLLCCR.PLSRCSEL = 0 (PLL source clock = MOSC) and SCKSCR.CKSEL[2:0] = 101b (System clock source = PLL):
  - When OSTDF changes 0 to 1, the clock source switches to the PLL free-running oscillation clock.
  - When OSTDF changes 1 to 0, the clock source switches back to PLL.

To switch the clock source to the main clock or PLL clock again after the oscillation stop detection, set the CKSEL[2:0] bits to a clock source other than the main clock or PLL clock and clear the OSTDF flag to 0. Also, check that the OSTDF flag is not 1, then set the CKSEL[2:0] bits to the main clock or PLL clock after the specified oscillation stabilization time elapses.

After a reset release, the main clock oscillator is stopped and the oscillation stop detection function is disabled. To enable the oscillation stop detection function, activate the main clock oscillator and write 1 to the oscillation stop detection function enable bit (OSTDCR.OSTDE) after a specified oscillation stabilization time elapses.

The oscillation stop detection function detects when the main clock is stopped by an external cause. Therefore, the oscillation stop detection function must be disabled before the main clock oscillator is stopped by software or a transition is made to Software Standby mode.

The oscillation stop detection function switches all clocks that can be selected as the MOSC clock except CLKOUT to the MOCO (when system clock is MOSC) or PLL free-running (when system clock is PLL).

The system clock (ICLK) frequency during the MOCO (when system clock is MOSC) or PLL free-running (when system clock is PLL) operation is specified by the MOCO oscillation frequency and the division ratio set by the system clock select bits (SCKDIVCR.ICK[2:0])

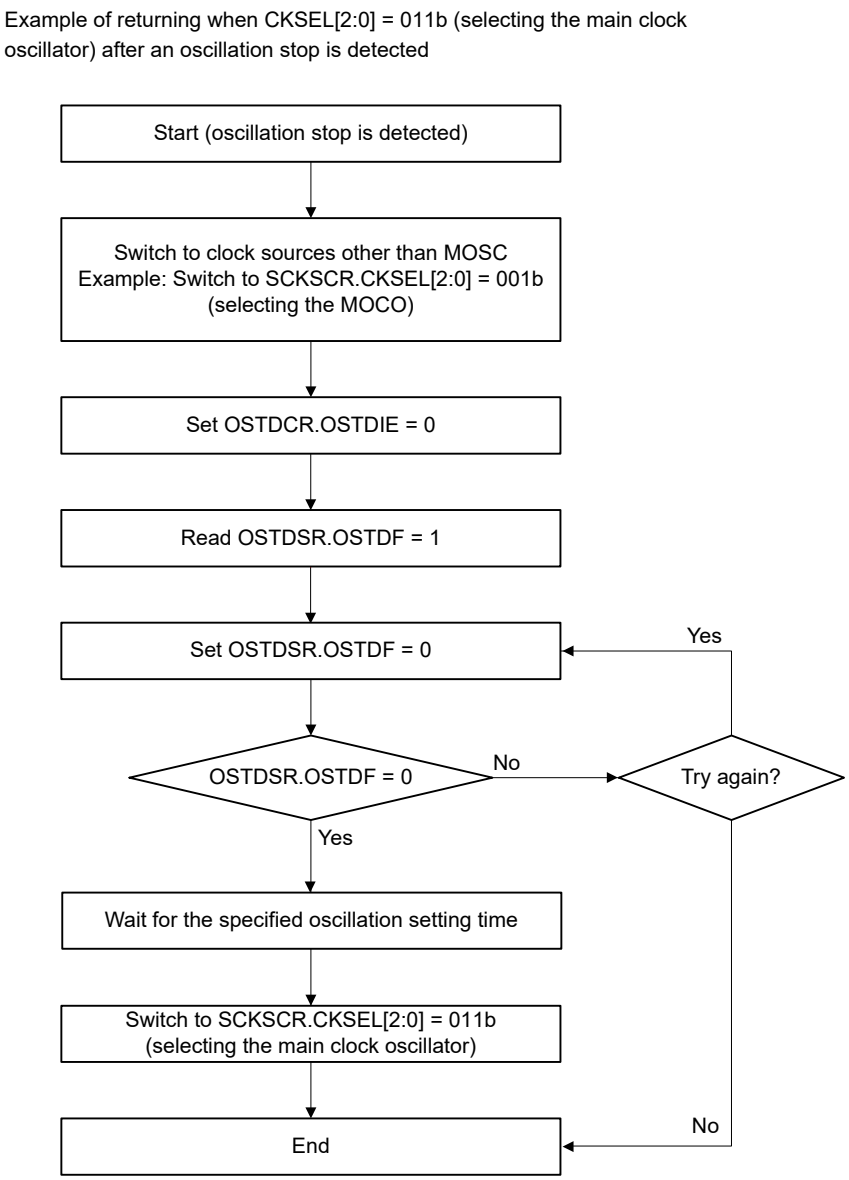

Note: On return from the oscillation-stopped state, the factor responsible for stopping the main clock oscillation circuit must be removed from the system to allow oscillation to resume.

Figure 8.11 Flow of recovery on detection of oscillator stop

8.5.2 Oscillation Stop Detection Interrupts

An oscillation stop detection interrupt (MOSC_STOP) is generated when the Oscillation Stop Detection Flag (OSTDSR.OSTDF) is 1 and the Oscillation Stop Detection Interrupt Enable bit in the Oscillation Stop Detection Control Register (OSTDCR.OSTDIE) is 1 (enabled). The Port Output Enable for GPT (POEG) is notified of the main clock oscillator stop. On receiving the notification, the POEG sets the Oscillation Stop Detection Flag in the POEG Group n Setting Register (POEGGn.OSTPF) to 1 (n = A, B, C, D).

After the oscillation stop is detected, wait at least 10 PCLKB clock cycles before writing to the POEGGn.OSTPF flag. When the OSTDSR.OSTDF flag requires clearing, do so after clearing the Oscillation Stop Detection Interrupt Enable bit in the Oscillation Stop Detection Control Register (OSTDCR.OSTDIE). Wait at least 2 PCLKB clock cycles before setting the OSTDCR.OSTDIE bit to 1 again. A longer PCLKB wait time might be required, depending on the number of cycles required to read a given I/O register.

The oscillation stop detection interrupt is a non-maskable interrupt. Because non-maskable interrupts are disabled in the initial state after a reset release, enable non-maskable interrupts through software before using oscillation stop detection interrupts. For details, see section 12, Interrupt Controller Unit (ICU).

8.5.3 Sub Clock Oscillation Stop Detection Function

The oscillation stop detection circuit monitors the sub-clock (SOSC) operating status with a low-speed on-chip oscillator clock (LOCO). If it detects that the sub-clock oscillation is stopped longer than a predefined interval, it assumes that a sub-clock oscillator circuit error has occurred and outputs the oscillation stop interrupt signal.

When oscillation stop is detected, the system clock is switched as follows:

- If an oscillation stop is detected with SCKSCR.CKSEL[2:0] = 100 (system clock source = SOSC), the system clock source is switched to the LOCO clock.

When the system is reset, operation of the oscillation stop detector must be enabled by software after the reset period ends.

Operation of the oscillation stop detector is stopped by software, or the oscillation stop detector operation is stopped by reset from the RES pin, or internal reset due to execution of an invalid instruction. Additionally, after a reset, enable the oscillation stop detection operation with software.

The period used by the oscillation stop detector to detect that the sub-clock oscillation is stopped (oscillation stop detection time) can be set by using the SOSTDCR.SOSDCCMP [11:0] bits.

Oscillation stop detection time = Low-speed on-chip oscillator clock (LOCO) cycle × ((value of SOSTDCR.SOSDCCMP [11:0]) + 1)

- SOSTDCR.SOSDCCMP [11:0] = 0x004: 133 µs (Min.), 153 µs (Typ.), 180 µs (Max.)
- SOSTDCR.SOSDCCMP [11:0] = 0xFFF: 108 ms (Min.), 125 ms (Typ.), 147 ms (Max.)

Sub-clock oscillation stop detection function is disabled when in Low-consumption clock mode (RCR4.ROPSEL = 1) and Software Standby mode. Sub-clock oscillation stop detection requires availability of both VCC supply and VRTC supply.

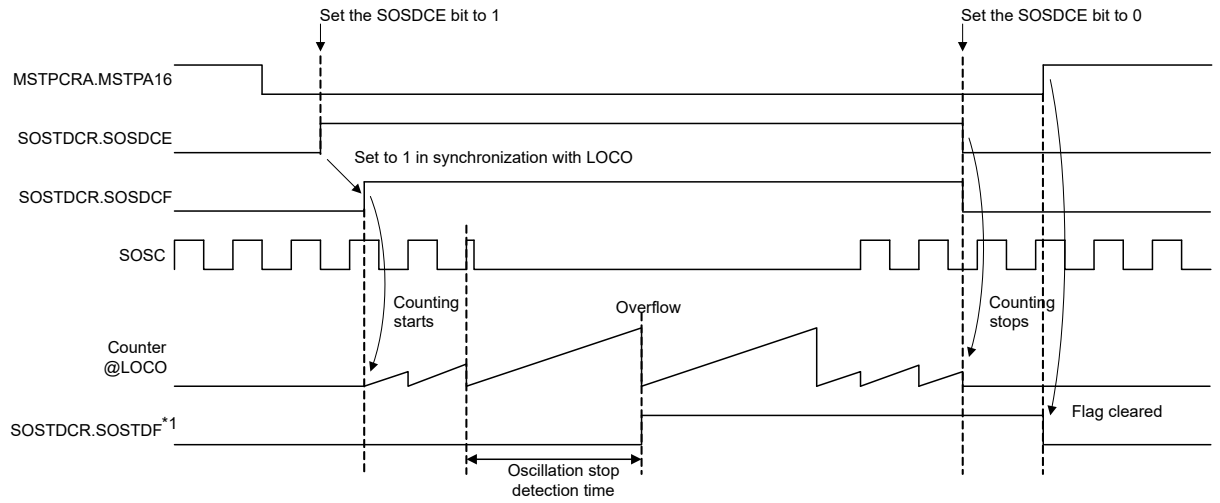

Note 1. When SOSTDCR.SOSTDIE is set to 1, SOSC_STOP is also output at the same timing.

Figure 8.12 Timing of oscillation stop detection by sub clock oscillation stop detector

Table 8.7 Example flow when SCKSCR.CKSEL[2:0] = 100b (selecting the sub-clock oscillator) and sub-clock oscillation stop is detected (1 of 2)

No.	Step name	Description
1	Start	Sub-clock oscillation stop is detected and the system clock source is switched to the LOCO clock.

Table 8.7 Example flow when SCKSCR.CKSEL[2:0] = 100b (selecting the sub-clock oscillator) and sub-clock oscillation stop is detected (2 of 2)

No.	Step name	Description
2	Setting the clock source	Set the SCKSCR.CKSEL other than 100b (system clock sources other than SOSC).
3	Stop the sub-clock oscillator	Set the SOSCCR.SOSTP to 1.
4	Stop operation of the sub-clock oscillation stop detector and interrupt	Set SOSTDCR.SOSTDCE to 0 and SOSTDCR.SOSTDIE to 0.
5	Check the sub-clock oscillation stop detection flag	Check that SOSTDCR.SOSTDF = 1. (sub-clock oscillation stop has been detected.)
6	Enter the SOSTD module-stop state	Set MSPTCRA.MSTPA16 to 1.
7	Wait for the sub-clock oscillation stop detection flag to clear	Wait until SOSTDCR.SOSTDF = 0 (sub-clock oscillation stop has not been detected.)
8	End	Operation for the sub-clock oscillation stop detector is completed. Reconfigure the sub-clock oscillator, the system clock source, and the sub-clock oscillation stop detector as required.

Note: On return from the oscillation-stopped state, the factor responsible for stopping the sub-clock oscillation circuit must be removed from the system to allow sub-clock oscillation to resume.

8.5.4 Sub-clock Oscillation Stop Detection Interrupts

A sub-clock oscillation stop detection interrupt (SOSTD) is generated when the Sub-clock Oscillation Stop Detection flag (SOSTDCR.SOSTDF) is 1 and the Sub-clock Oscillation Stop Detection Interrupt Enable bit in the Sub-clock Oscillation Stop Detection Control Register (SOSTDCR.SOSTDIE) is 1 (enabled).

When the SOSTDCR.SOSTDF flag requires clearing, do so after clearing the Sub-clock Oscillation Stop Detection Interrupt Enable bit in the Sub-clock Oscillation Stop Detection Control Register (SOSTDCR.SOSTDIE). Make sure SOSTDF is cleared before setting the SOSTDIE bit to 1 again.

8.6 PLL Circuit

The PLL circuit has a function to multiply the frequency from the oscillator.

Figure 8.13 shows the block diagram of PLL circuit.

The input clock source selection circuit selects the clock source input to the PLL.

The input clock divider circuit divides the input clock and generates the PLL reference clock.

The frequency control circuit controls the VCO clock to be generated from the PLL reference clock according to the frequency multiplier setting. The frequency multiplication ratio is determined by the PLLMUL bits.

The PLL input clock frequency, the PLL reference clock frequency, and PLL output clock frequency must be within the values specified in section 43, Electrical Characteristics.

The PLL frequency setting can only be changed when the PLL circuit is stopped. Do not change the PLL frequency setting when the PLL Stop Control bit (PLLSTP) is 0.

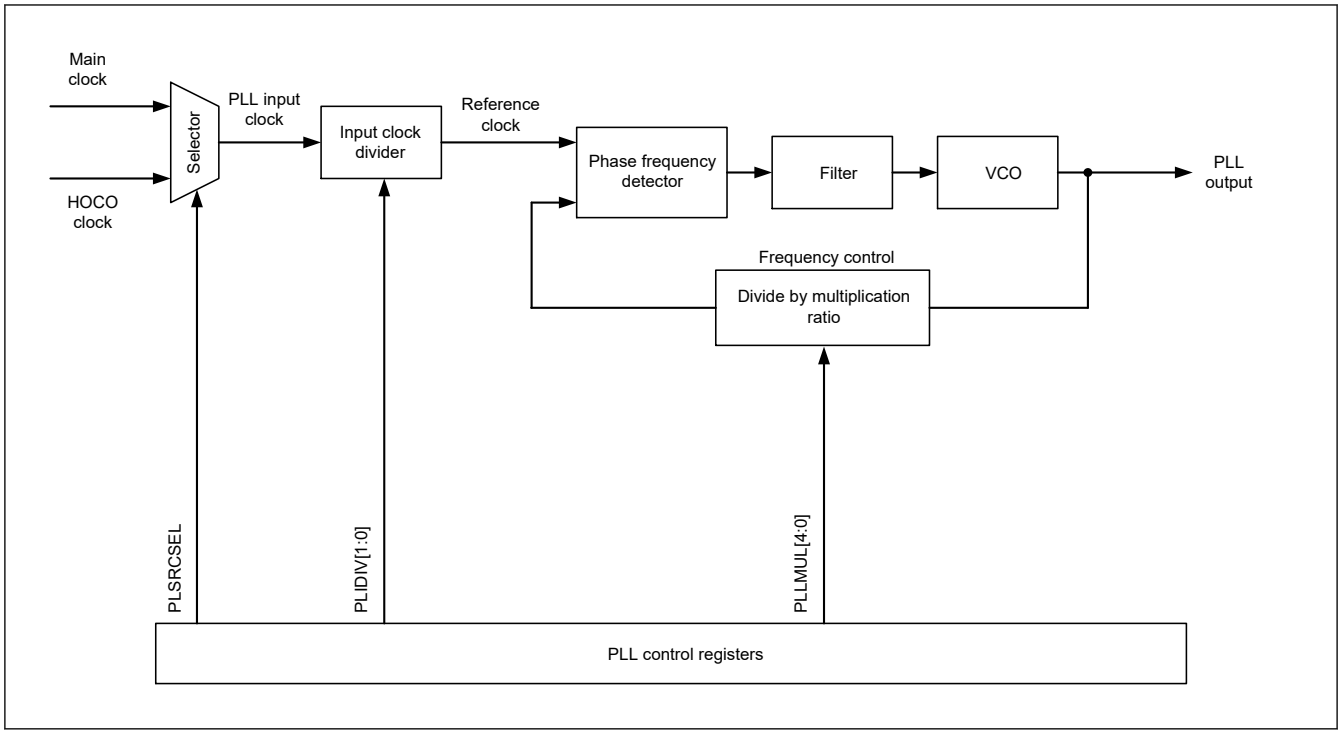

Figure 8.13 PLL block diagram

8.7 PLL_RTC Circuit

The PLL_RTC circuit has a function to multiply the frequency from the sub-clock oscillator.

8.8 Internal Clock

Clock sources for the internal clock signals include:

- Main clock
- Sub-clock
- HOCO clock
- MOCO clock
- LOCO clock
- PLL clock
- IWDT-dedicated clock
- External clock for SWCLK

The following internal clocks are produced from these sources.

- Operating clock of the CPU, DMAC, DTC, Flash, and SRAM: System clock (ICLK)
- Operating clocks of peripheral modules: Peripheral module clocks (PCLKA, PCLKB, PCLKC, PCLKD)
- Operating clock of the FlashIF: FlashIF clock (FCLK)
- Operating clock for the CANFD: CANFD clock (CANFDCLK)
- Operating clock for the CAN: CAN clock (CANMCLK)
- Operating clocks for the CAC: CAC clock (CACCLK)
- Operating clocks for the RTC: RTC-dedicated clock (RTCSCLK, RTCS128CLK, RTCPLLCLK)
- Operating clock for the IWDT: IWDT-dedicated clock (IWDTCLK)
- Operating clock for the AGT: AGT-dedicated clock (AGTSCLK, AGTLCLK)
- Operating clock for the Systick Timer: Systick Timer-dedicated clock (SYSTICCLK)

- Operating clock for the Segment LCD : Segment LCD source clock (LCDSRCCLK)
- Operating clocks for the UARTA : UARTA clock (UARTAMCLK, UARTASCLK, UARTALCLK, UARTAHCLK, UARTAMOCLK)
- Clock for external pin output: Clock/Buzzer output clock(CLKOUT)
- Operating clock for the OCD: Serial wire clock (SWCLK)

For details on the registers used to set the frequencies of the internal clocks, see section 8.8.1. System Clock (ICLK) to section 8.8.14. Serial Wire Debugger Clock (SWCLK).

If the value of any of these bits is changed, subsequent operation is at the frequency determined by the new value.

8.8.1 System Clock (ICLK)

The system clock (ICLK) is the operating clock of the CPU, DMAC, DTC, Flash, and SRAM.

The ICLK frequency is specified by the ICK[2:0] bits in SCKDIVCR, the CKSEL[2:0] bits in SCKSCR, the PLLMUL[4:0] bits and PLIDIV[1:0] bits in PLLCCR, and the HOCOFRQ0[2:0] bits in OFS1. OFS1 is for non-secure developers and OFS1_SEC is for secure developers. The applied setting value is determined by OFS1_SEL.

The value of OFS1.HOCOFRQ0[2:0] bits is automatically transferred to HOCOCR2.HCFRQ0[2:0] bits after reset, therefore HOCO frequency can also be specified by HOCOCR2.HCFRQ0[2:0] bits.

When the ICLK clock source is switched, the duration of the ICLK clock cycle becomes longer during the clock source transition period. See Figure 8.14 and Figure 8.15.

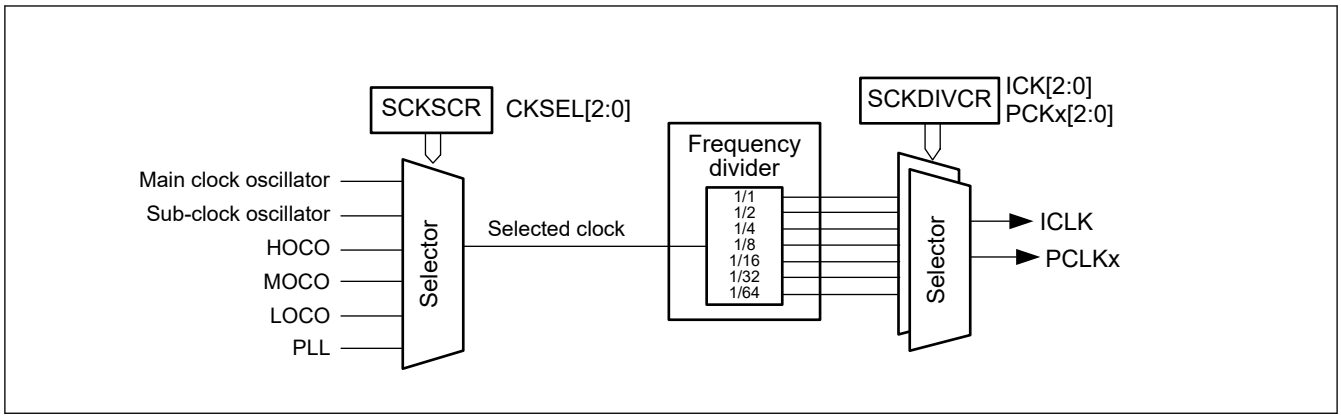

Figure 8.14 Block diagram of clock source selector

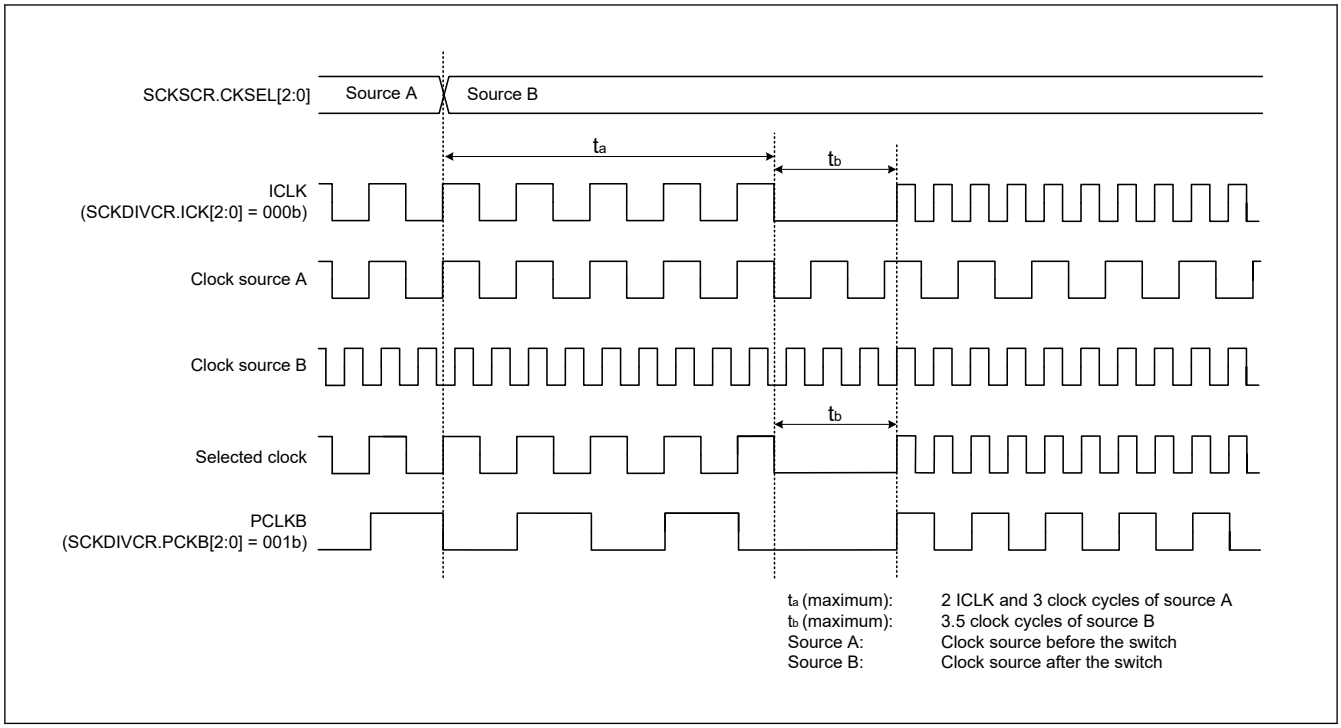

Figure 8.15 Timing of clock source switching

8.8.2 Peripheral Module Clock (PCLKA, PCLKB, PCLKC, PCLKD)

The peripheral module clocks (PCLKA, PCLKB, PCLKC and PCLKD) are the operating clocks for the peripheral modules.

The frequency of the given clock is specified in the following bits:

- PCKA[2:0], PCKB[2:0], PCKC[2:0] and PCKD[2:0] bits in SCKDIVCR
- CKSEL[2:0] bits in SCKSCR
- PLLMUL[4:0] and PLIDIV[1:0] bits in PLLCCR
- HOCOFRQ0[2:0] bits in OFS1*1.

Note 1. OFS1 is for non-secure developers and OFS1_SEC is for secure developers. The applied setting value is determined by OFS1_SEL.

The value of OFS1.HOCOFRQ0[2:0] bits is automatically transferred to HOCOCR2.HCFRQ0[2:0] bits after reset, therefore HOCO frequency can also be specified by HOCOCR2.HCFRQ0[2:0] bits.

When the clock source of the peripheral module clock is switched, the duration of the peripheral module clock cycle becomes longer during the clock source transition period. See Figure 8.14 and Figure 8.15.

8.8.3 FlashIF Clock (FCLK)

The flash interface clock (FCLK) is the operating clock for the flash memory interface. In addition to reading from the data flash, FCLK is used for the programming and erasure of the code flash and data flash.

The FCLK frequency is specified in the following bits:

- FCK[2:0] bits in SCKDIVCR
- CKSEL[2:0] bits in SCKSCR
- PLLMUL[4:0] and PLIDIV[1:0] bits in PLLCCR
- HOCOFRQ0[2:0] bits in OFS1*1.

Note 1. OFS1 is for non-secure developers and OFS1_SEC is for secure developers. The applied setting value is determined by OFS1_SEL.

The value of OFS1.HOCOFRQ0[2:0] bits is automatically transferred to HOCOCR2.HCFRQ0[2:0] bits after reset, therefore HOCO frequency can also be specified by HOCOCR2.HCFRQ0[2:0] bits.

8.8.4 CANFD Clock (CANFDCLK)

The CANFD clock (CANFDCLK) is the operating clock for the CANFD module.

The CANFDCLK frequency is specified in the following bits:

- CANFDCKDIV[2:0] bits in CANFDCKDIVCR
- CANFDCKSEL[2:0] bits in CANFDCKCR
- PLLMUL[4:0] and PLIDIV[1:0] bits in PLLCCR

8.8.5 CAN Clock (CANMCLK)

The CAN clock, CANMCLK, is the operating clock for the CAN module. CANMCLK is generated by the main clock oscillator.

8.8.6 CAC Clock (CACCLK)

The CAC clock, CACCLK, is the operating clock for the CAC. CACCLK is generated by the following oscillators:

- Main clock oscillator
- Sub-clock oscillator
- High-speed clock oscillator (HOCO)
- Middle-speed clock oscillator (MOCO)
- Low-speed on-chip oscillator (LOCO)
- IWDT-dedicated on-chip oscillator. (IWDTLOCO)

8.8.7 RTC-Dedicated Clock (RTCSCLK, RTCS128CLK, RTCPLLCLK)

The RTC-dedicated clock (RTCSCLK, RTCS128CLK, RTCPLLCLK) is the operating clock for the RTC.

RTCSCLK and RTCS128CLK are generated by the sub-clock oscillator, and RTCPLLCLK is generated by the PLL_RTC.

8.8.8 IWDT-Dedicated Clock (IWDTCLK)

The IWDT-dedicated clock (IWDTCLK) is the operating clock for the IWDT. IWDTCLK is internally generated by the IWDT-dedicated on-chip oscillator.

8.8.9 AGT-Dedicated Clock (AGTSCLK, AGTLCLK)

The AGT-dedicated clocks (AGTSCLK and AGTLCLK) are the operating clocks for the AGT. AGTSCLK is generated by the sub-clock oscillator, and AGTLCLK is generated by the LOCO clock.

8.8.10 SysTick Timer-Dedicated Clock (SYSTICCLK)

The SysTick timer-dedicated clock, SYSTICCLK, is the operating clock for the SysTick timer. SYSTICCLK is generated by the LOCO clock.

8.8.11 Segment LCD Source Clock (LCDSRCCLK)

The Segment LCD source clock (LCDSRCCLK) is the operating clock for the SLCDC module.

Specify the frequency in the following bits:

- LCDSCKSEL[2:0] bits in SLCDSCKCR

LCDSRCCLK is output when SLCDSCKCR.LCDSCKEN is set to 1. When changing the value of SLCDSCKCR.LCDSCKSEL[2:0], make sure that the value of SLCDSCKCR.LCDSCKEN is 0.

8.8.12 UARTA Clock (UARTAMCLK, UARTASCLK, UARTALCLK, UARTAHCLK, UARTAMOCLK)

The UARTA clock (UARTAMCLK, UARTASCLK, UARTALCLK, UARTAHCLK, UARTAMOCLK) is the operating clock for the UARTA module.

UARTAMCLK is generated by the main clock oscillator. UARTASCLK is generated by the sub-clock oscillator. UARTALCLK is generated by the LOCO clock. UARTAHCLK is generated by the HOCO clock. UARTAMOCLK is generated by the MOCO clock.

8.8.13 External Pin Output Clock (CLKOUT)

The CLKOUT is output externally from the CLKOUT pin for the clock or buzzer output. The CLKOUT is output to the CLKOUT pin when the CKOCR.CKOEN bit is set to 1. Only change the value in the CKODIV[2:0] bits or CKOSEL[2:0] bits in CKOCR when the CKOCR.CKOEN bit is 0.

The CLKOUT clock frequency is specified in the following bits:

- CKODIV[2:0] bits or CKOSEL[2:0] bits in CKOCR
- HOCOFRQ0[2:0] bits in OFS1[*1]

Note 1. OFS1 is for non-secure developers and OFS1_SEC is for secure developers. The applied setting value is determined by OFS1_SEL.

The value of OFS1.HOCOFRQ0[2:0] bits is automatically transferred to HOCOCR2.HCFRQ0[2:0] bits after reset, therefore HOCO frequency can also be specified by HOCOCR2.HCFRQ0[2:0] bits.

8.8.14 Serial Wire Debugger Clock (SWCLK)

The serial wire debugger clock (SWCLK) is the operating clock for the serial wire debugger.

SWCLK is generated by the external clock for Serial Wire Debugger (SWCLK pin).

8.9 Usage Notes

8.9.1 Notes on Clock Generation Circuit

The frequency of the following clocks supplied to each module changes according to the setting of the SCKDIVCR register:

- System clock (ICLK)
- Peripheral module clocks (PCLKA, PCLKB, PCLKC, and PCLKD)
- FlashIF clock (FCLK)

Each frequency must meet the following conditions:

- Each frequency must be selected within the operation-guaranteed range of the operating frequency (f) specified in the AC characteristics. See section 43, Electrical Characteristics.
- The system clock, peripheral module clock must be set according to Table 8.2.

To ensure correct processing after the clock frequency changes, first write to the relevant Clock Control register to change the frequency, then read the value from the register, and finally perform the subsequent processing.

8.9.2 Notes on Resonator

Because various resonator characteristics relate closely to your board design, adequate evaluation is required before use. See the resonator connection example in Figure 8.7. The circuit constants for the resonator depend on the resonator to be used and the stray capacitance of the mounting circuit. Therefore, consult the resonator manufacturer when determining the circuit constants. The voltage to be applied between the resonator pins must be within the absolute maximum rating.

8.9.3 Notes on Board Design

When using a crystal resonator, place the resonator and its load capacitors as close to the XTAL and EXTAL pins as possible. Other signal lines should be routed away from the oscillation circuit as shown in Figure 8.16 to prevent

electromagnetic induction from interfering with correct oscillation. Figure 8.16 shows the case which the main clock oscillator is used. For sub-clock oscillator, it is also the same as Figure 8.16.

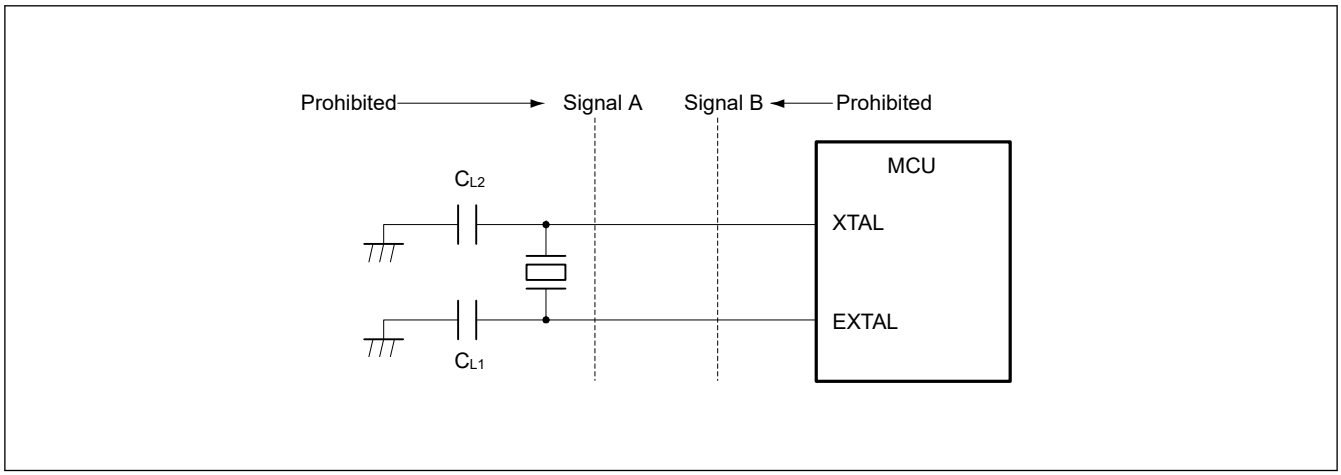

Figure 8.16 Signal routing in board design for oscillation circuit

8.9.4 Notes on Resonator Connect Pin

When the main clock is not used, the EXTAL and XTAL pins can be used as general ports. When these pins are used as general ports, the main clock must be stopped (MOSCCR.MOSTP bit should be set to 1).

9. Clock Frequency Accuracy Measurement Circuit (CAC)

9.1 Overview

The Clock Frequency Accuracy Measurement Circuit (CAC) counts pulses of the clock to be measured (measurement target clock) within the time generated by the clock selected as the measurement reference (measurement reference clock), and determines the accuracy depending on whether the number of pulses is within the allowable range. When measurement is complete or the number of pulses within the time generated by the measurement reference clock is not within the allowable range, an interrupt request is generated.

Table 9.1 lists the CAC specifications, Figure 9.1 shows the CAC block diagram, and Table 9.2 lists the CAC I/O pin.

Table 9.1 CAC specifications

Parameter	Specifications
Measurement target clocks	Frequency can be measured for: ● Main clock oscillator ● Sub-clock oscillator ● HOCO clock ● MOCO clock ● LOCO clock ● Peripheral module clock B (PCLKB) ● IWDT-dedicated clock
Measurement reference clocks	Frequency can be referenced to: ● External clock input to the CACREF pin ● Main clock oscillator ● Sub-clock oscillator ● HOCO clock ● MOCO clock ● LOCO clock ● Peripheral module clock B (PCLKB) ● IWDT-dedicated clock
Selectable function	Digital filter
Interrupt sources	● Measurement end ● Frequency error ● Overflow
Module-stop function	Module-stop state can be set to reduce power consumption
TrustZone Filter	Security attribution can be set

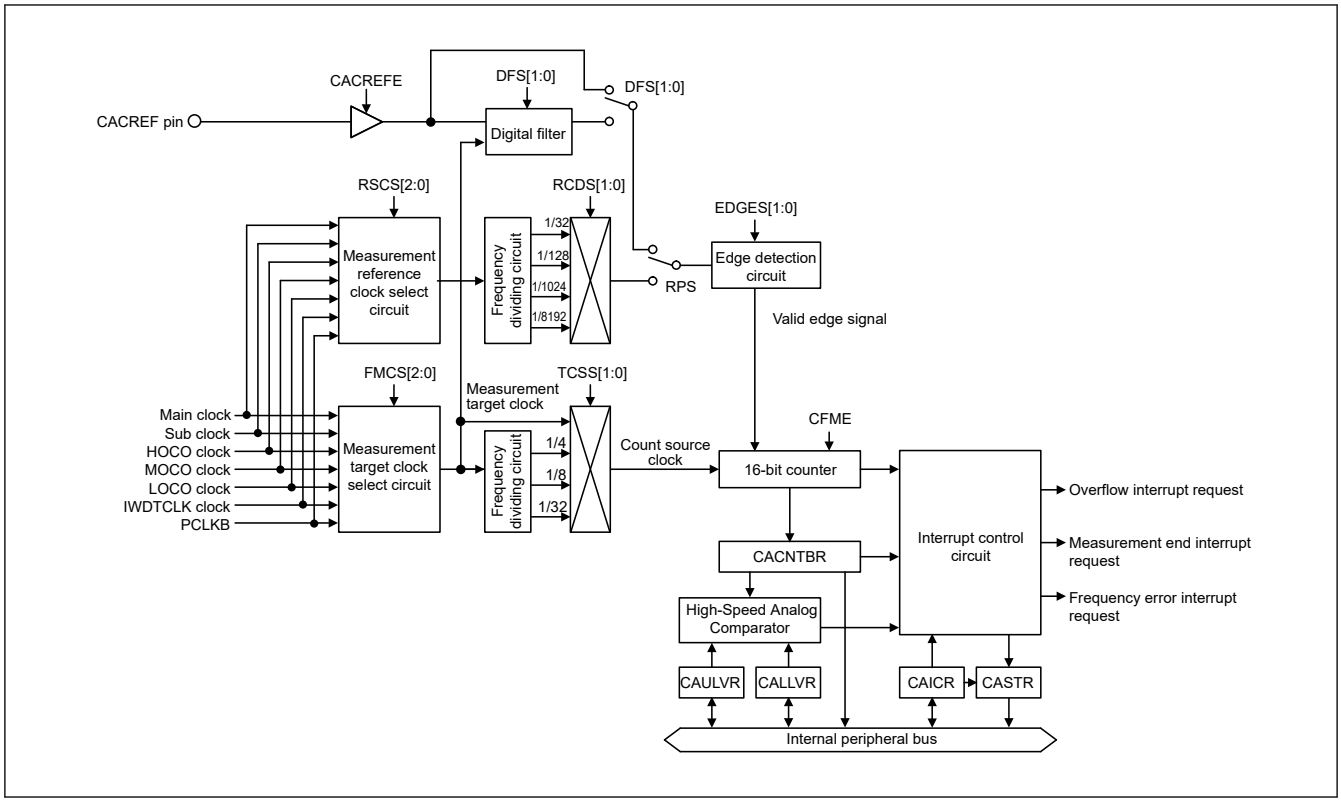

Figure 9.1 CAC block diagram

Table 9.2 CAC I/O pin

Function	Pin name	I/O	Description
CAC	CACREF	Input	Measurement reference clock input pin

9.2 Register Descriptions

9.2.1 CACR0 : CAC Control Register 0

Base address: CAC = 0x4008_3600

Offset address: 0x00

Bit position:	7	6	5	4	3	2	1	0
Bit field:	—	—	—	—	—	—	—	CFME
Value after reset:	0	0	0	0	0	0	0	0

Bit	Symbol	Function	R/W
0	CFME	Clock Frequency Measurement Enable 0: Disable 1: Enable	R/W
7:1	—	These bits are read as 0. The write value should be 0.	R/W

CFME bit (Clock Frequency Measurement Enable)

The CFME bit enables clock frequency measurement. Changes made to this bit are not immediately reflected to the internal circuit. Read the bit to confirm that the change has been reflected.

9.2.2 CACR1 : CAC Control Register 1

Base address: CAC = 0x4008_3600

Offset address: 0x01

Bit position:	7	6	5	4	3	2	1	0
Bit field:	EDGES[1:0]		TCSS[1:0]		FMCS[2:0]			CACREFE
Value after reset:	0	0	0	0	0	0	0	0

Bit	Symbol	Function	R/W
0	CACREFE	CACREF Pin Input Enable 0: Disable 1: Enable	R/W
3:1	FMCS[2:0]	Measurement Target Clock Select 0 0 0: Main clock oscillator 0 0 1: Sub-clock oscillator 0 1 0: HOCO clock 0 1 1: MOCO clock 1 0 0: LOCO clock 1 0 1: Peripheral module clock B (PCLKB) 1 1 0: IWDT-dedicated clock 1 1 1: Setting prohibited	R/W
5:4	TCSS[1:0]	Timer Count Clock Source Select 0 0: No division 0 1: × 1/4 clock 1 0: × 1/8 clock 1 1: × 1/32 clock	R/W
7:6	EDGES[1:0]	Valid Edge Select 0 0: Rising edge 0 1: Falling edge 1 0: Both rising and falling edges 1 1: Setting prohibited	R/W

Note: Set the CACR1 register when the CACR0.CFME bit is 0.

CACREFE bit (CACREF Pin Input Enable)

The CACREFE bit enables the CACREF pin input.

FMCS[2:0] bits (Measurement Target Clock Select)

The FMCS[2:0] bits select the measurement target clock whose frequency is to be measured.

TCSS[1:0] bits (Timer Count Clock Source Select)

The TCSS[1:0] bits select the division ratio of the measurement target clock.

EDGES[1:0] bits (Valid Edge Select)

The EDGES[1:0] bits select the valid edge for the reference signal.

9.2.3 CACR2 : CAC Control Register 2

Base address: CAC = 0x4008_3600

Offset address: 0x02

Bit position:	7	6	5	4	3	2	1	0
Bit field:	DFS[1:0]		RCDS[1:0]		RSCS[2:0]			RPS
Value after reset:	0	0	0	0	0	0	0	0

Bit	Symbol	Function	R/W
0	RPS	Reference Signal Select 0: CACREF pin input 1: Internal clock (internally generated signal)	R/W
3:1	RSCS[2:0]	Measurement Reference Clock Select 0 0 0: Main clock oscillator 0 0 1: Sub-clock oscillator 0 1 0: HOCO clock 0 1 1: MOCO clock 1 0 0: LOCO clock 1 0 1: Peripheral module clock B (PCLKB) 1 1 0: IWDT-dedicated clock 1 1 1: Setting prohibited	R/W
5:4	RCDS[1:0]	Measurement Reference Clock Frequency Division Ratio Select 0 0: × 1/32 clock 0 1: × 1/128 clock 1 0: × 1/1024 clock 1 1: × 1/8192 clock	R/W
7:6	DFS[1:0]	Digital Filter Select 0 0: Disable digital filtering 0 1: Use sampling clock for the digital filter as the frequency measuring clock 1 0: Use sampling clock for the digital filter as the frequency measuring clock divided by 4 1 1: Use sampling clock for the digital filter as the frequency measuring clock divided by 16.	R/W

Note: Set the CACR2 register when the CACR0.CFME bit is 0.

RPS bit (Reference Signal Select)

The RPS bit selects whether to use the CACREF pin input or an internal clock (internally generated signal) as the reference signal.

RSCS[2:0] bits (Measurement Reference Clock Select)

The RSCS[2:0] bits select the reference clock for measurement.

RCDS[1:0] bits (Measurement Reference Clock Frequency Division Ratio Select)

The RCDS[1:0] bits select the frequency-divisor of the reference clock for measurement when an internal reference clock is selected. When RPS = 0 (CACREF pin is used as the reference clock source), the reference clock is not divided.

DFS[1:0] bits (Digital Filter Select)

The DFS[1:0] bits enable or disable the digital filter and selects its sampling clock.

9.2.4 CAICR : CAC Interrupt Control Register

Base address: CAC = 0x4008_3600

Offset address: 0x03

Bit position:	7	6	5	4	3	2	1	0
Bit field:	—	OVFFCL	MENDFCL	FERRFCL	—	OVFIE	MENDIE	FERRIE
Value after reset:	0	0	0	0	0	0	0	0

Bit	Symbol	Function	R/W
0	FERRIE	Frequency Error Interrupt Request Enable 0: Disable 1: Enable	R/W
1	MENDIE	Measurement End Interrupt Request Enable 0: Disable 1: Enable	R/W

Bit	Symbol	Function	R/W
2	OVFIE	Overflow Interrupt Request Enable 0: Disable 1: Enable	R/W
3	—	This bit is read as 0. The write value should be 0.	R/W
4	FERRFCL	FERRF Clear 0: No effect 1: The CASTR.FERRF flag is cleared	W
5	MENDFCL	MENDF Clear 0: No effect 1: The CASTR.MENDF flag is cleared	W
6	OVFFCL	OVFF Clear 0: No effect 1: The CASTR.OVFF flag is cleared.	W
7	—	This bit is read as 0. The write value should be 0.	R/W

FERRIE bit (Frequency Error Interrupt Request Enable)

The FERRIE bit enables or disables the frequency error interrupt request.

MENDIE bit (Measurement End Interrupt Request Enable)

The MENDIE bit enables or disables the measurement end interrupt request.

OVFIE bit (Overflow Interrupt Request Enable)

The OVFIE bit enables or disables the overflow interrupt request.

FERRFCL bit (FERRF Clear)

Setting the FERRFCL bit to 1 clears the CASTR.FERRF flag.

MENDFCL bit (MENDF Clear)

Setting the MENDFCL bit to 1 clears the CASTR.MENDF flag.

OVFFCL bit (OVFF Clear)

Setting the OVFFCL bit to 1 clears the CASTR.OVFF flag.

9.2.5 CASTR : CAC Status Register

Base address: CAC = 0x4008_3600

Offset address: 0x04

Bit position:	7	6	5	4	3	2	1	0
Bit field:	—	—	—	—	—	OVFF	MENDF	FERRF
Value after reset:	0	0	0	0	0	0	0	0

Bit	Symbol	Function	R/W
0	FERRF	Frequency Error Flag 0: Clock frequency is within the allowable range 1: Clock frequency has deviated beyond the allowable range (frequency error).	R
1	MENDF	Measurement End Flag 0: Measurement is in progress 1: Measurement ended	R
2	OVFF	Overflow Flag 0: Counter has not overflowed 1: Counter overflowed	R
7:3	—	These bits are read as 0.	R

FERRF flag (Frequency Error Flag)

The FERRF flag indicates a deviation of the clock frequency from the set value (frequency error).

[Setting condition]

- The clock frequency is outside the allowable range defined in the CAULVR and CALLVR registers.

[Clearing condition]

- 1 is written to the FERRFCL bit.

MENDF flag (Measurement End Flag)

The MENDF flag indicates the end of measurement.

[Setting condition]

- Measurement ends.

[Clearing condition]

- 1 is written to the MENDFCL bit.

OVFF flag (Overflow Flag)

The OVFF flag indicates that the counter overflowed.

[Setting condition]

- The counter overflows.

[Clearing condition]

- 1 is written to the CAICR.OVFFCL bit.

9.2.6 CAULVR : CAC Upper-Limit Value Setting Register

Base address: CAC = 0x4008_3600

Offset address: 0x06

Bit position:	15															0
Bit field:																
Value after reset:	0	0	0	0	0	0	0	0	0	0	0	0	0	0	0	0

Bit	Symbol	Function	R/W
15:0	n/a	The Upper Value of the Allowable Range The CAULVR register is a 16-bit read/write register that specifies the upper value of the allowable range. When the counter value exceeds the value specified in this register, a frequency error is detected. Write to this register when the CACR0.CFME bit is 0. The counter value stored in CACNTBR can vary depending on the difference between the phases of the digital filter and edge-detection circuit, and the signal on the CACREF pin. Ensure that this setting allows an adequate margin.	R/W

9.2.7 CALLVR : CAC Lower-Limit Value Setting Register

Base address: CAC = 0x4008_3600

Offset address: 0x08

Bit position:	15															0
Bit field:																
Value after reset:	0	0	0	0	0	0	0	0	0	0	0	0	0	0	0	0

Bit	Symbol	Function	R/W
15:0	n/a	The Lower Value of the Allowable Range The CALLVR register is a 16-bit read/write register that specifies the lower value of the allowable range. When the counter value falls below the value specified in this register, a frequency error is detected. Write to this register when the CACR0.CFME bit is 0. The counter value stored in CACNTBR can vary depending on the difference between the phases of the digital filter and edge-detection circuit, and the signal on the CACREF pin. Ensure that this setting allows an adequate margin.	R/W

9.2.8 CACNTBR : CAC Counter Buffer Register

Base address: CAC = 0x4008_3600

Offset address: 0x0A

Bit position:	15															0
Bit field:																
Value after reset:	0	0	0	0	0	0	0	0	0	0	0	0	0	0	0	0

Bit	Symbol	Function	R/W
15:0	n/a	The Measurement Result The CACNTBR register is a 16-bit read-only register that stores the measurement result.	R

9.3 Operation

9.3.1 Measuring Clock Frequency

The CAC measures the clock frequency using the CACREF pin input or an internal clock as a reference. Figure 9.2 shows an operating example of the CAC.

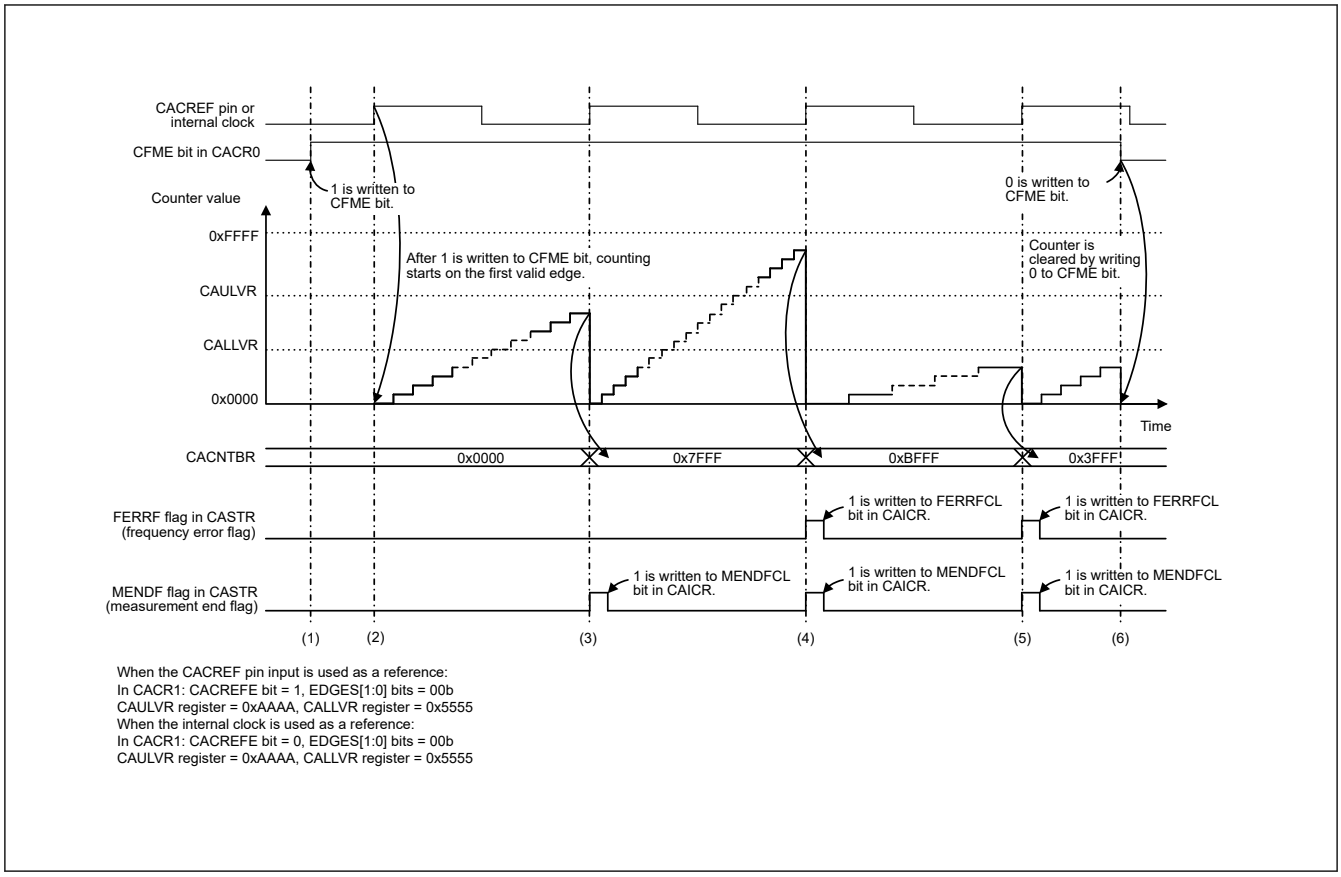

Figure 9.2 CAC operating example

The events in Figure 9.2 are:

1. When the CACREF pin input is used as reference (CACR1.CACREFE = 1), frequency measurement is enabled by writing 1 to the CACR0.CFME bit while the CACR2.RPS bit is set to 0 and the CACR1.CACREFE bit is set to 1. When the internal clock is used as reference (CACR1.CACREFE = 0), frequency measurement is enabled by writing 1 to the CACR0.CFME bit while the CACR2.RPS bit is set to 1.
2. When the CACREF pin input is used as reference, after 1 is written to the CFME bit, the timer starts up-counting if the valid edge selected by the CACR1.EDGES[1:0] bits (rising edge (CACR1.EDGES[1:0] = 00b) in Figure 9.2) is input from the CACREF pin. When the internal clock is used as reference, after 1 is written to the CFME bit, the timer starts up-counting if the valid edge selected by the CACR1.EDGES[1:0] bits (rising edge (CACR1.EDGES[1:0] = 00b) in Figure 9.2) is input based on the clock source selected by the CACR2.RSCS[2:0] bits.
3. When the next valid edge is input, the counter value is transferred to CACNTBR and compared with the values in CAULVR and CALLVR. If both CACNTBR ≤ CAULVR and CACNTBR ≥ CALLVR are true, only the MENDF flag in CASTR is set to 1, because the clock frequency is correct. If the MENDIE bit in CAICR is 1, a measurement end interrupt is generated.
4. When the next valid edge is input, the counter value is transferred to CACNTBR and compared with the values in CAULVR and CALLVR. If CACNTBR > CAULVR, the FERRF flag in CASTR is set to 1, because the clock frequency is erroneous. If the FERRIE bit in CAICR is 1, a frequency error interrupt is generated. The MENDF flag in CASTR is set to 1 at the end of measurement. If the MENDIE bit in CAICR is 1, a measurement end interrupt is generated.
5. When the next valid edge is input, the counter value is transferred to CACNTBR and compared with the values in CAULVR and CALLVR. If CACNTBR < CALLVR, the FERRF flag in CASTR is set to 1, because the clock frequency is erroneous. If the FERRIE bit in CAICR is 1, a frequency error interrupt is generated. The MENDF flag in CASTR is set to 1 at the end of measurement. If the MENDIE bit in CAICR is 1, a measurement end interrupt is generated.
6. When the CFME bit in CACR0 is 1, the counter value is transferred to CACNTBR and compared with the values in CAULVR and CALLVR every time a valid edge is input. Writing 0 to the CFME bit in CACR0 clears the counter and stops up-counting.

9.3.2 Digital Filtering of Signals on CACREF Pin

The CACREF pin has a digital filter, and levels on the CACREF pin are transmitted to the internal circuitry after three consecutive matches in the selected sampling interval. The same level continues to be transmitted internally until the level on the pin has three consecutive matches again. Enabling or disabling of the digital filter and its sampling clock are selectable.

The counter value transferred to CACNTBR might be in error by up to 1 cycle of the sampling clock because of the difference between the phases of the digital filter and the signal input to the CACREF pin. When a frequency dividing clock is selected as a count source clock, the counter value error is obtained using the following formula:

$$\text{Counter value error} = (1 \text{ cycle of the count source clock}) / (1 \text{ cycle of the sampling clock})$$

9.4 Interrupt Requests

The CAC generates three types of interrupt requests:

- Frequency error interrupt
- Measurement end interrupt
- Overflow interrupt

When an interrupt source is generated, the associated status flag is set to 1. Table 9.3 provides information on the CAC interrupt requests.

Table 9.3 CAC interrupt requests

Interrupt request	Interrupt enable bit	Status flag	Interrupt sources
Frequency error interrupt	CAICR.FERRIE	CASTR.FERRF	The result of comparing CACNTBR with CAULVR and CALLVR is either CACNTBR > CAULVR or CACNTBR < CALLVR
Measurement end interrupt	CAICR.MENDIE	CASTR.MENDF	• Valid edge is input from the CACREF pin or internal clock • Measurement end interrupt does not occur at the first valid edge after writing 1 to the CACR0.CFME bit
Overflow interrupt	CAICR.OVFIE	CASTR.OVFF	Counter overflows

9.5 Usage Notes

9.5.1 Settings for the Module-Stop Function

The Module Stop Control Register C (MSTPCRC) can enable or disable CAC operation. The CAC module is initially stopped after reset. Releasing the module-stop state enables access to the registers. For details, see section 10, Low Power Modes.

10. Low Power Modes

10.1 Overview

The MCU has several functions for reducing power consumption, such as setting clock dividers, stopping modules, selecting power control mode in Normal mode, and transitioning to low power modes.

Table 10.1 lists the specifications of the low power mode functions. Table 10.2 lists the conditions to transition to low power modes, the states of the CPU and peripheral modules, and the method for canceling each mode. After a reset, the MCU enters the program execution state, but only the DTC, DMAC and SRAM operate.

Table 10.1 Specifications of the low power mode functions

Item	Specification
Reducing power consumption by switching clock signals	The frequency division ratio can be selected independently for the system clock (ICLK), peripheral module clocks (PCLKA, PCLKB, PCLKC, PCLKD), and flash interface clock (FCLK). *1
Module stop	Functions can be stopped independently for each peripheral module
Low-power modes	● Sleep mode ● Software Standby mode ● Snooze mode
Power control modes	● Power consumption can be reduced in Normal, Sleep and Snooze modes by selecting an appropriate operating power control mode according to the operating frequency. ● The following operating power control modes are available: – High-speed mode – Middle-speed mode – Low-speed mode – Subosc-speed mode
TrustZone Filter	Security attribution can be set for each registers

Note 1. For details, see section 8, Clock Generation Circuit

Table 10.2 Operating conditions of each low power mode (1 of 2)

Item	Sleep mode	Software Standby mode	Snooze mode
Transition condition	When [Condition 1] or [Condition 2] while SBYCR.SSBY = 0 [Condition 1] ● WFI instruction ● A valid interrupt request*1 cannot be accepted to CPU. (including a transition from the time WFI instruction is executed to the time the transition to Sleep mode is completed) [Condition 2] ● SCR.SLEEPONEXIT = 1 ● Complete execution of all exception handlers ● A valid interrupt request*1 cannot be accepted to CPU. (including a transition from the time WFI instruction is executed to the time the transition to Sleep mode is completed)	When [Condition 1] or [Condition 2] while SBYCR.SSBY = 1 [Condition 1] ● WFI instruction ● A valid interrupt request*1 cannot be accepted to CPU. (including a transition from the time WFI instruction is executed to the time the transition to Software Standby mode is completed) [Condition 2] ● SCR.SLEEPONEXIT = 1 ● Complete execution of all exception handlers ● A valid interrupt request*1 cannot be accepted to CPU. (including a transition from the time WFI instruction is executed to the time the transition to Software Standby mode is completed)	Snooze request trigger in Software Standby mode. SNZCR.SNZE=1.
Canceling method	All interrupts. Any reset available in the mode.	Interrupts shown in Table 10.3. Any reset available in the mode.	Interrupts shown in Table 10.3. Any reset available in the mode.
State after cancellation by an interrupt	Program execution state	Program execution state	Program execution state
State after cancellation by a reset	Reset state	Reset state	Reset state
Main clock oscillator	Selectable	Stop	Selectable*6
Sub-clock oscillator	Selectable	Selectable	Selectable
High-speed on-chip oscillator	Selectable	Stop	Selectable
Middle-speed on-chip oscillator	Selectable	Stop	Selectable

Table 10.2 Operating conditions of each low power mode (2 of 2)

Item	Sleep mode	Software Standby mode	Snooze mode
Low-speed on-chip oscillator	Selectable	Selectable	Selectable
IWDT-dedicated on-chip oscillator	Selectable*2	Selectable*2	Selectable*2
PLL	Selectable	Stop	Selectable*6
PLL_RTC	Operation prohibited	Operation prohibited	Operation prohibited
Oscillation stop detection function	Selectable	Operation prohibited	Operation prohibited
Sub oscillation stop detection function	Selectable	Selectable	Selectable
Clock/buzzer output function	Selectable	Selectable*3	Selectable
CPU	Stop (Retained)	Stop (Retained)	Stop (Retained)
SRAMn (n = 0)	Selectable	Stop (Retained)*11	Selectable
Flash memory	Operating	Stop (Retained)	Stop (Retained)
DMA Controller (DMAC)	Selectable	Stop (Retained)	Operation prohibited
Data Transfer Controller (DTC)	Selectable	Stop (Retained)	Selectable
Watchdog Timer (WDT)	Selectable*2	Stop (Retained)	Stop (Retained)
Independent Watchdog Timer (IWDT)	Selectable*2	Selectable*2	Selectable*2
Realtime clock (RTC)	Selectable	Selectable	Selectable
Low Power Asynchronous General Purpose Timer (AGTn (n = 0, 1))	Selectable	Selectable*4	Selectable*4
12-Bit A/D Converter (ADC12)	Selectable	Stop (Retained)	Selectable*9
Data Operation Circuit (DOC)	Selectable	Stop (Retained)	Selectable
Serial Communications Interface (SCI0)	Selectable	Stop (Retained)	Selectable (RXD0 falling edge is available, to enter Snooze mode) (only in asynchronous mode).*7
Serial Communications Interface (SCIn (n = 1, 3 to 5, 9))	Selectable	Stop (Retained)	Operation prohibited
Serial Interface UARTA (UARTAn (n = 0, 1))	Selectable	Selectable*12	Selectable*12
I2C Bus Interface (IIC0)	Selectable	Selectable*5	Selectable*5 Only wakeup interrupt is available.
I2C Bus Interface (IIC1)	Selectable	Stop (Retained)	Operation prohibited
Event Link Controller (ELC)	Selectable	Stop (Retained)	Selectable*8
Segment LCD Controller/Driver (SLCDC)	Selectable	Selectable*10	Selectable
IRQn (n = 0 to 15) pin interrupt	Selectable	Selectable	Selectable
NMI pin interrupt	Selectable	Selectable	Selectable
Low voltage detection (LVD)	Selectable	Selectable	Selectable
Power-on reset circuit	Operating	Operating	Operating
Other peripheral modules	Selectable	Stop (Retained)	Operation prohibited
I/O Ports	Operating	Retained	Operating

Note: Selectable means that operating or not operating can be selected by the control registers.
Stop (Retained) means that the contents of the internal registers are retained but the operations are suspended.
Operation prohibited means that the function must be stopped before entering Software Standby mode.
All modules whose module-stop bits are 0 start as soon as PCLKs are supplied after entering Snooze mode. In order to avoid increase in power consumption in Snooze mode, module-stop bit of modules which are unnecessary in Snooze mode must be set to 1 before entering Software Standby mode.

Note 1. Valid interrupt requests are any interrupt/exception that are not masked by the priority level of current exception and the priority level set by BASEPRI. In addition, if the interrupt request is based on IELSRn, the interrupt must be enabled by NVIC_ISERn.

Note 2. In IWDT-dedicated on-chip oscillator and IWDT, operating or stopping is selected by setting the IWDT Stop Control bit (IWDTSTPCTL) in Option Function Select register 0 (OFS0) in IWDT auto start mode. In WDT, operating or stopping is selected by setting the WDT Stop Control bit (WDTSTPCTL) in Option Function Select Register 0 (OFS0) in WDT auto start mode. Power consumption can be reduced in Normal and Sleep modes by selecting an appropriate operating power control mode according to the operating frequency.
Note 3. Stopped when the clock output source select bits (CKOCR.CKOSEL[2:0]) are set to a value other than 010b (LOCO) and 100b (SOSC).
Note 4. AGT0 operation is possible when 100b (AGTLCLK) or 110b (AGTSCLK) is selected by the AGT0.AGTMR1.TCK[2:0] bits. AGT1 operation is possible when 100b (AGTLCLK), 110b (AGTSCLK) or 101b (underflow event signal from AGT0) is selected by the AGT1.AGTMR1.TCK[2:0] bits.
Note 5. IIC0 wakeup interrupt is available.
Note 6. When using SCI0 in Snooze mode, MOSCCR.MOSTP and PLLCR.PLLSTP bits must be 1.
Note 7. Serial communication modes of SCI0 is only in asynchronous mode.
Note 8. Event lists the restrictions described in section 10.9.12. ELC Events in Snooze Mode.
Note 9. When using the 12-bit A/D Converter in Snooze mode, the ADCMPCR.CMPAE and ADCMPCR.CMPBE bits must be 1.
Note 10. Operation is possible when 000b (LOCO) or 001b (SOSC) is selected in the SLCDSCKCR.LCDSCKSEL[2:0] bits.
Note 11. Whether or not to retain some SRAM area in Software Standby mode can be selected by the PSMCR register. For detail, see section 10.2.13. PSMCR : Power Save Memory Control Register.
Note 12. UARTAn operation is possible when 1000b (UARTALCLK) or 1001b (UARTASCLK) is selected by the UARTA.UTAnCK.CK[3:0] bits.

Table 10.3 Interrupt source for canceling Snooze and Software Standby modes

Interrupt source	Name	Software Standby mode	Snooze mode
NMI		Yes	Yes
Port	PORT_IRQn (n = 0 to 15)	Yes	Yes
LVD	LVD_LVD1	Yes	Yes
	LVD_LVD2	Yes	Yes
	LVD_EXLVDVBAT	Yes	Yes
	LVD_VRTC	Yes	Yes
	LVD_EXLVD	Yes	Yes
IWDT	IWDT_NMIUNDF	Yes	Yes
RTC	RTC_ALM	Yes	Yes
	RTC_PRD	Yes	Yes
UARTA	UARTA0_INTUR	Yes	Yes
	UARTA0_INTURE	Yes	Yes
	UARTA1_INTUR	Yes	Yes
	UARTA1_INTURE	Yes	Yes
SOSTD	SOSC_STOP	Yes	Yes
AGT1	AGT1_AGTI	Yes	Yes*3
	AGT1_AGTCMAI	Yes	Yes
	AGT1_AGTCMBI	Yes	Yes
IIC0	IIC0_WUI	Yes	Yes
ADC12n (n = 0)	ADC12n_WCMPM	No	Yes with SELSR0*1 *3
	ADC12n_WCMPUM	No	Yes with SELSR0*1 *3
SCI0	SCI0_AM	No	Yes with SELSR0*1 *2
	SCI0_RXI_OR_ERI	No	Yes with SELSR0*1 *2
DTC	DTC_COMPLETE	No	Yes with SELSR0*1 *3
DOC	DOC_DOPCI	No	Yes with SELSR0 *1
DMAC/DTC	DMA_TRANSERR	No	Yes
ICU	ICU_SNZCANCEL	No	Yes

Note 1. To use the interrupt request as a trigger for exiting the Snooze mode, the request must be selected in SELSR0. See section 12, Interrupt Controller Unit (ICU) for the setting of SELSR0. When a trigger selected in SELSR0 occurs after executing WFI instruction

and during the transition from Normal mode to Software Standby mode, the request might or might not be accepted, depending on the timing of the occurrence.

Note 2. Only one of either SCI0_AM or SCI0_RXI_OR_ERI can be set.

Note 3. The event which is enabled by the SNZEDCR0 must not be used.

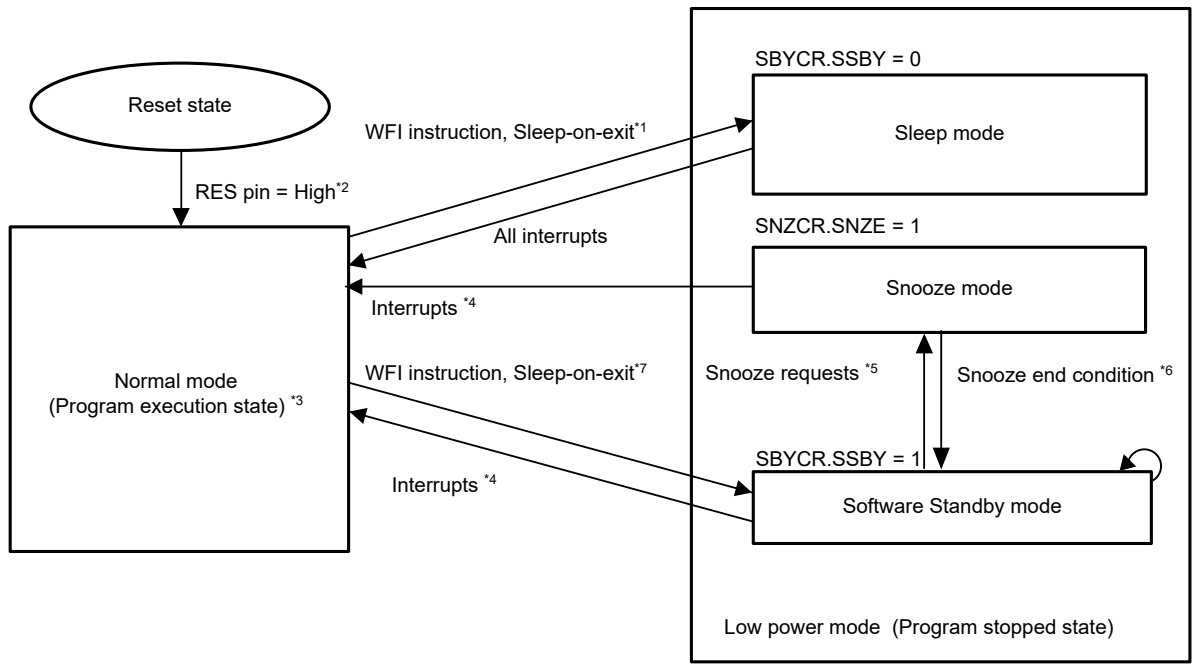

Note 1. When an interrupt that acts as a trigger for cancellation of the Sleep mode is received during a transition to the Sleep mode state, the MCU does not transit to Sleep mode state but go back to Normal mode state.

Note 2. The MOCO clock is the source of the operating clock following a transition from the reset state to Normal mode.

Note 3. The transition to Normal mode is made because of an interrupt from Sleep mode, Snooze mode, or Software Standby mode. The clock source is the same as before entering the low power mode.

Note 4. See Table 10.3.

Note 5. See Table 10.8.

Note 6. See Table 10.10.

Note 7. When an interrupt that acts as a trigger for cancellation of the Sleep mode state is received during a transition to the Software Standby mode state, the MCU does not transit to Software Standby mode state but go back to Normal mode state.

Figure 10.1 Mode transitions

10.2 Register Descriptions

10.2.1 LPMSAR : Low Power Mode Security Attribution Register

Base address: SYSC = 0x4001_E000

Offset address: 0x3C8

Bit position:	31	30	29	28	27	26	25	24	23	22	21	20	19	18	17	16
Bit field:	—	—	—	—	—	—	—	—	—	—	—	—	—	—	—	—
Value after reset:	1	1	1	1	1	1	1	1	1	1	1	1	1	1	1	1

Bit position:	15	14	13	12	11	10	9	8	7	6	5	4	3	2	1	0
Bit field:	—	—	—	—	—	—	—	—	—	—	—	NONSEC4	—	NONSEC2	—	NONSEC0
Value after reset:	1	1	1	1	1	1	1	1	1	1	1	1	1	1	1	1

Bit	Symbol	Function	R/W
0	NONSEC0[*1]	Non-secure Attribute bit 0 Target register: OPCCR, SOPCCR, LDOCR 0: Secure 1: Non-secure	R/W
1	—	This bit is read as 1. The write value should be 1.	R/W
2	NONSEC2	Non-secure Attribute bit 2 Target register: SBYCR, PSMCR, SRMPSCR 0: Secure 1: Non-secure	R/W
3	—	This bit is read as 1. The write value should be 1.	R/W
4	NONSEC4	Non-secure Attribute bit 4 Target register: SNZCR, SNZEDCR0, SNZREQCR0 0: Secure 1: Non-secure	R/W
31:5	—	These bits are read as 1. The write value should be 1.	R/W

Note: Only Secure access can write to this register. Both Secure access and Non-secure read access are allowed but Non-secure write access is not allowed and TrustZone access error is not generated.
Note: This register is write-protected by PRCR register.
Note 1. It is recommended that these bits are configured as Non-secure when the device life cycle is NSECSD (DLMMON.DLMMON[3:0] = 0011b). See section 42.8.1. Restrictions on setting the security attribution for details.

The LPMSAR register controls the secure attribute of Low Power Mode registers.

NONSEC0 bit (Non-secure Attribute bit 0)

This bit controls the security attribute of OPCCR, SOPCCR, LDOCR.

NONSEC2 bit (Non-secure Attribute bit 2)

This bit controls the security attribute of SBYCR, PSMCR, SRMPSCR.

NONSEC4 bit (Non-secure Attribute bit 4)

This bit controls the security attribute of SNZCR, SNZEDCR0, SNZREQCR0.

10.2.2 SBYCR : Standby Control Register

Base address: SYSC = 0x4001_E000

Offset address: 0x00C

Bit position:	15	14	13	12	11	10	9	8	7	6	5	4	3	2	1	0
Bit field:	SSBY	—	—	—	—	—	—	—	—	—	—	—	—	—	—	—
Value after reset:	0	0	0	0	0	0	0	0	0	0	0	0	0	0	0	0

Bit	Symbol	Function	R/W
14:0	—	These bits are read as reset value. The write value should be reset value	R/W
15	SSBY	Software Standby Mode Select 0: Sleep mode 1: Software Standby mode	R/W

Note: If the security attribution is configured as Secure:
- Secure access and Non-secure read access are allowed
- Non-secure write access is ignored, and TrustZone access error is not generated.

If the security attribution is configured as Non-secure:
- Secure and Non-secure access are allowed.

Note: Set the PRCR.PRC1 bit to 1 (write enabled) before rewriting this register.

SSBY bit (Software Standby Mode Select)

The SSBY bit specifies the transition destination after a WFI instruction is executed.

When the SSBY bit is set to 1, the MCU enters Software Standby mode after execution of a WFI instruction. When the MCU returns to Normal mode from Software Standby mode by an interrupt, the SSBY bit remains 1. The SSBY bit can be cleared by writing 0 to it.

While the OSTDCR.OSTDE bit is 1, setting of the SSBY bit is ignored. Even if SSBY bit is 1, the MCU enters Sleep mode on execution of a WFI instruction.

While the FENTRYR.FENTRYC bit or FENTRYR.FENTRYD bit is 1 setting of the SSBY bit is ignored. Even if SSBY bit is 1, the MCU enters Sleep mode on execution of a WFI instruction.

10.2.3 MSTPCRA : Module Stop Control Register A

Base address: MSTP = 0x4008_4000

Offset address: 0x000

Bit position:	31	30	29	28	27	26	25	24	23	22	21	20	19	18	17	16
Bit field:	—	—	—	—	—	—	—	—	—	MSTPA22	—	—	—	—	—	MSTPA16
Value after reset:	1	1	1	1	1	1	1	1	1	0	1	1	1	1	1	1

Bit position:	15	14	13	12	11	10	9	8	7	6	5	4	3	2	1	0
Bit field:	—	—	—	—	—	—	—	—	—	—	—	—	—	—	—	MSTPA0
Value after reset:	1	1	1	1	1	1	1	1	1	1	1	1	1	1	1	0

Bit	Symbol	Function	R/W
0	MSTPA0	SRAM0 Module Stop Target module: SRAM0 0: Cancel the module-stop state 1: Enter the module-stop state	R/W
15:1	—	These bits are read as 1. The write value should be 1.	R/W
16	MSTPA16	Sub Oscillation Stop Detection Module Stop Target module: SOSTD 0: Cancel the module-stop state 1: Enter the module-stop state	R/W
21:17	—	These bits are read as 1. The write value should be 1.	R/W
22	MSTPA22	DMA Controller/Data Transfer Controller Module Stop*1 Target module: DTC, DMAC 0: Cancel the module-stop state 1: Enter the module-stop state	R/W
31:23	—	These bits are read as 1. The write value should be 1.	R/W

Note: If the security attribution is configured as Secure:
- Secure access and Non-secure read access are allowed
- Non-secure write access is ignored, and TrustZone access error is not generated.

If the security attribution is configured as Non-secure:
- Secure and Non-secure access are allowed.

Note 1. When rewriting the MSTPA22 bit from 0 to 1, disable the DMAC and DTC before setting the MSTPA22 bit.

10.2.4 MSTPCRB : Module Stop Control Register B

Base address: MSTP = 0x4008_4000

Offset address: 0x004

Bit position:	31	30	29	28	27	26	25	24	23	22	21	20	19	18	17	16
Bit field:	MSTPB31	MSTPB30	—	MSTPB28	MSTPB27	MSTPB26	—	—	—	MSTPB22	—	—	MSTPB19	MSTPB18	MSTPB17	—
Value after reset:	1	1	1	1	1	1	1	1	1	1	1	1	1	1	1	1

Bit position:	15	14	13	12	11	10	9	8	7	6	5	4	3	2	1	0
Bit field:	—	—	—	—	—	—	MSTPB9	MSTPB8	—	MSTPB6	MSTPB5	—	—	—	—	MSTPB0
Value after reset:	1	1	1	1	1	1	1	1	1	1	1	1	1	1	1	1

Bit	Symbol	Function	R/W
0	MSTPB0	Serial Interface UARTA Module Stop Target module: UARTA 0: Cancel the module-stop state 1: Enter the module-stop state	R/W
4:1	—	These bits are read as 1. The write value should be 1.	R/W
5	MSTPB5	IrDA Interface Module Stop Target module: IrDA 0: Cancel the module-stop state 1: Enter the module-stop state	R/W
6	MSTPB6	Quad Serial Peripheral Interface Module Stop Target module: QSPI 0: Cancel the module-stop state 1: Enter the module-stop state	R/W
7	—	This bit is read as 1. The write value should be 1.	R/W
8	MSTPB8	I^2C Bus Interface 1 Module Stop Target module: IIC1 0: Cancel the module-stop state 1: Enter the module-stop state	R/W
9	MSTPB9	I^2C Bus Interface 0 Module Stop Target module: IIC0 0: Cancel the module-stop state 1: Enter the module-stop state	R/W
16:10	—	These bits are read as 1. The write value should be 1.	R/W
17	MSTPB17	Serial Peripheral Interface 2 Module Stop Target module: SPI2 0: Cancel the module-stop state 1: Enter the module-stop state	R/W
18	MSTPB18	Serial Peripheral Interface 1 Module Stop Target module: SPI1 0: Cancel the module-stop state 1: Enter the module-stop state	R/W
19	MSTPB19	Serial Peripheral Interface 0 Module Stop Target module: SPI0 0: Cancel the module-stop state 1: Enter the module-stop state	R/W
21:20	—	These bits are read as 1. The write value should be 1.	R/W
22	MSTPB22	Serial Communication Interface 9 Module Stop Target module: SCI9 0: Cancel the module-stop state 1: Enter the module-stop state	R/W
25:23	—	These bits are read as 1. The write value should be 1.	R/W

Bit	Symbol	Function	R/W
26	MSTPB26	Serial Communication Interface 5 Module Stop Target module: SCI5 0: Cancel the module-stop state 1: Enter the module-stop state	R/W
27	MSTPB27	Serial Communication Interface 4 Module Stop Target module: SCI4 0: Cancel the module-stop state 1: Enter the module-stop state	R/W
28	MSTPB28	Serial Communication Interface 3 Module Stop Target module: SCI3 0: Cancel the module-stop state 1: Enter the module-stop state	R/W
29	—	This bit is read as 1. The write value should be 1.	R/W
30	MSTPB30	Serial Communication Interface 1 Module Stop Target module: SCI1 0: Cancel the module-stop state 1: Enter the module-stop state	R/W
31	MSTPB31	Serial Communication Interface 0 Module Stop Target module: SCI0 0: Cancel the module-stop state 1: Enter the module-stop state	R/W

Note: If the security attribution is configured as Secure:
- Secure access and Non-secure read access are allowed
- Non-secure write access is ignored, and TrustZone access error is not generated.

If the security attribution is configured as Non-secure:
- Secure and Non-secure access are allowed.

10.2.5 MSTPCRC : Module Stop Control Register C

Base address: MSTP = 0x4008_4000

Offset address: 0x008

Bit position:	31	30	29	28	27	26	25	24	23	22	21	20	19	18	17	16
Bit field:	MSTPC31	—	—	—	MSTPC27	—	—	—	—	—	—	—	—	—	—	—
Value after reset:	1	1	1	1	1	1	1	1	1	1	1	1	1	1	1	1

Bit position:	15	14	13	12	11	10	9	8	7	6	5	4	3	2	1	0
Bit field:	—	MSTPC14	MSTPC13	—	—	—	—	—	—	—	—	MSTPC4	—	—	MSTPC1	MSTPC0
Value after reset:	1	1	1	1	1	1	1	1	1	1	1	1	1	1	1	1

Bit	Symbol	Function	R/W
0	MSTPC0	Clock Frequency Accuracy Measurement Circuit Module Stop*1 Target module: CAC 0: Cancel the module-stop state 1: Enter the module-stop state	R/W
1	MSTPC1	Cyclic Redundancy Check Calculator Module Stop Target module: CRC 0: Cancel the module-stop state 1: Enter the module-stop state	R/W
3:2	—	These bits are read as 1. The write value should be 1.	R/W
4	MSTPC4	Segment LCD Controller Module Stop*2 Target module: SLCDC 0: Cancel the module-stop state 1: Enter the module-stop state	R/W
12:5	—	These bits are read as 1. The write value should be 1.	R/W

Bit	Symbol	Function	R/W
13	MSTPC13	Data Operation Circuit Module Stop Target module: DOC 0: Cancel the module-stop state 1: Enter the module-stop state	R/W
14	MSTPC14	Event Link Controller Module Stop Target module: ELC 0: Cancel the module-stop state 1: Enter the module-stop state	R/W
26:15	—	These bits are read as 1. The write value should be 1.	R/W
27	MSTPC27	Controller Area Network with Flexible Data-Rate Module Stop*3 Target module: CANFD 0: Cancel the module-stop state 1: Enter the module-stop state	R/W
30:28	—	These bits are read as 1. The write value should be 1.	R/W
31	MSTPC31	RSIP-E31A Module Stop Target module: RSIP-E31A 0: Cancel the module-stop state 1: Enter the module-stop state	R/W

Note: If the security attribution is configured as Secure:
- Secure access and Non-secure read access are allowed
- Non-secure write access is ignored, and TrustZone access error is not generated.

If the security attribution is configured as Non-secure:
- Secure and Non-secure access are allowed.

Note 1. The MSTPC0 bit should be written after the CAC clock (CACMCLK/CACSCLK/CACLCLK/CACMOCLK/CACHCLK/CACILCLK) is stable. To enter Software Standby mode, the WFI instruction should be executed after 2 or more cycles of CACMCLK/CACSCLK/CACLCLK/CACMOCLK/CACHCLK/CACILCLK following the change of MSTPC0.

Note 2. The MSTPC4 bit should be written after the Segment LCD clock (LCDSRCCLK) is stable. To enter Software Standby mode, the WFI instruction should be executed after 2 or more cycles of LCDSRCCLK following the change of MSTPC4.

Note 3. The MSTPC27 bit should be written after the CANFD clock (CANFDCLK) is stable. To enter Software Standby mode, the WFI instruction should be executed after 2 or more cycles of CANFDCLK following the change of MSTPC27.

10.2.6 MSTPCRD : Module Stop Control Register D

Base address: MSTP = 0x4008_4000

Offset address: 0x00C

Bit position:	31	30	29	28	27	26	25	24	23	22	21	20	19	18	17	16
Bit field:	—	—	—	—	—	—	—	—	—	—	—	—	—	—	—	MSTPD16
Value after reset:	1	1	1	1	1	1	1	1	1	1	1	1	1	1	1	1

Bit position:	15	14	13	12	11	10	9	8	7	6	5	4	3	2	1	0
Bit field:	—	MSTPD14	MSTPD13	MSTPD12	MSTPD11	—	—	—	—	—	—	—	MSTPD3	MSTPD2	—	—
Value after reset:	1	1	1	1	1	1	1	1	1	1	1	1	1	1	1	1

Bit	Symbol	Function	R/W
1:0	—	These bits are read as 1. The write value should be 1.	R/W
2	MSTPD2	Low Power Asynchronous General Purpose Timer 1 Module Stop*1 Target module: AGT1 0: Cancel the module-stop state 1: Enter the module-stop state	R/W
3	MSTPD3	Low Power Asynchronous General Purpose Timer 0 Module Stop*2 Target module: AGT0 0: Cancel the module-stop state 1: Enter the module-stop state	R/W
10:4	—	These bits are read as 1. The write value should be 1.	R/W

Bit	Symbol	Function	R/W
11	MSTPD11	Port Output Enable for GPT Group D Module Stop Target module: POEGGD 0: Cancel the module-stop state 1: Enter the module-stop state	R/W
12	MSTPD12	Port Output Enable for GPT Group C Module Stop Target module: POEGGC 0: Cancel the module-stop state 1: Enter the module-stop state	R/W
13	MSTPD13	Port Output Enable for GPT Group B Module Stop Target module: POEGGB 0: Cancel the module-stop state 1: Enter the module-stop state	R/W
14	MSTPD14	Port Output Enable for GPT Group A Module Stop Target module: POEGGA 0: Cancel the module-stop state 1: Enter the module-stop state	R/W
15	—	This bit is read as 1. The write value should be 1.	R/W
16	MSTPD16	12-bit A/D Converter 0 Module Stop Target module: ADC120 0: Cancel the module-stop state 1: Enter the module-stop state	R/W
31:17	—	These bits are read as 1. The write value should be 1.	R/W

Note: If the security attribution is configured as Secure:
- Secure access and Non-secure read access are allowed
- Non-secure write access is ignored, and TrustZone access error is not generated.

If the security attribution is configured as Non-secure:
- Secure and Non-secure access are allowed.

Note 1. When the count source is sub-clock oscillator or LOCO, AGT1 counting does not stop even if MSTPD2 is set to 1. If the count source is the sub-clock oscillator or LOCO, this bit must be set to 1 except when accessing the AGT1 registers.

Note 2. When the count source is sub-clock oscillator or LOCO, AGT0 counting does not stop even if MSTPD3 is set to 1. If the count source is the sub-clock oscillator or LOCO, this bit must be set to 1 except when accessing the AGT0 registers.

10.2.7 MSTPCRE : Module Stop Control Register E

Base address: MSTP = 0x4008_4000

Offset address: 0x010

Bit position:	31	30	29	28	27	26	25	24	23	22	21	20	19	18	17	16
Bit field:	MSTPE31	MSTPE30	MSTPE29	MSTPE28	MSTPE27	MSTPE26	—	—	—	—	—	—	—	—	—	—
Value after reset:	1	1	1	1	1	1	1	1	1	1	1	1	1	1	1	1

Bit position:	15	14	13	12	11	10	9	8	7	6	5	4	3	2	1	0
Bit field:	—	—	—	—	—	—	—	—	—	—	—	—	—	—	—	—
Value after reset:	1	1	1	1	1	1	1	1	1	1	1	1	1	1	1	1

Bit	Symbol	Function	R/W
25:0	—	These bits are read as 1. The write value should be 1.	R/W
26	MSTPE26	GPT5 Module Stop Target module: GPT5 0: Cancel the module-stop state 1: Enter the module-stop state	R/W
27	MSTPE27	GPT4 Module Stop Target module: GPT4 0: Cancel the module-stop state 1: Enter the module-stop state	R/W

Bit	Symbol	Function	R/W
28	MSTPE28	GPT3 Module Stop Target module: GPT3 0: Cancel the module-stop state 1: Enter the module-stop state	R/W
29	MSTPE29	GPT2 Module Stop Target module: GPT2 0: Cancel the module-stop state 1: Enter the module-stop state	R/W
30	MSTPE30	GPT1 Module Stop Target module: GPT1 0: Cancel the module-stop state 1: Enter the module-stop state	R/W
31	MSTPE31	GPT0 Module Stop Target module: GPT0 0: Cancel the module-stop state 1: Enter the module-stop state	R/W

Note: If the security attribution is configured as Secure:
- Secure access and Non-secure read access are allowed
- Non-secure write access is ignored, and TrustZone access error is not generated.

If the security attribution is configured as Non-secure:
- Secure and Non-secure access are allowed.

10.2.8 OPCCR : Operating Power Control Register

Base address: SYSC = 0x4001_E000

Offset address: 0x0A0

Bit position:	7	6	5	4	3	2	1	0
Bit field:	—	—	—	OPCMTSF	—	—	OPCM[1:0]	
Value after reset:	0	0	0	0	0	0	0	1

Bit	Symbol	Function	R/W
1:0	OPCM[1:0]	Operating Power Control Mode Select 0 0: High-speed mode 0 1: Middle-speed mode 1 0: Setting prohibited 1 1: Low-speed mode	R/W
3:2	—	These bits are read as 0. The write value should be 0.	R/W
4	OPCMTSF	Operating Power Control Mode Transition Status Flag 0: Transition completed 1: During transition	R
7:5	—	These bits are read as 0. The write value should be 0.	R/W

Note: If the security attribution is configured as Secure:
- Secure access and Non-secure read access are allowed
- Non-secure write access is ignored, and TrustZone access error is not generated.

If the security attribution is configured as Non-secure:
- Secure and Non-secure access are allowed.

Note: Set the PRCR.PRC1 bit to 1 (write enabled) before rewriting this register.

The OPCCR register is used to reduce power consumption in Normal and Sleep modes by specifying a lower operating frequency.

OPCM[1:0] bits (Operating Power Control Mode Select)

The OPCM[1:0] bits select the operating power control mode in Normal mode, Sleep mode, and Snooze mode. Table 10.4 shows the relationship between the operating power control modes and the OPCM[1:0] and SOPCM settings.

Writing to OPCCR.OPCM[1:0] is prohibited while the MCU is under the following conditions:

- The MCU is in Sleep or Snooze mode, the MCU transitions to Normal mode from Sleep or Snooze mode, the MCU transitions to Sleep, Snooze, or Software Standby mode from Normal mode, or the MCU is in transfer state when in operating power control mode.
- Flash is in programming mode.
- The MCU is in Subosc-speed mode (SOPCCR.SOPCM bit is 1).
- The data flash is disabled (DFLCTL.DFLEN bit is 0).
- HOCOCR.HCSTP and OSCSF.HOCOSF bits are 0 (HOCO is in stabilization wait counting).

Writing 11b (Low-speed mode) to the OPCCR.OPCM[1:0] bits is prohibited while PLLCR.PLLSTP bit = 0 (PLL is operating).

OPCMTSF flag (Operating Power Control Mode Transition Status Flag)

The OPCMTSF flag indicates the switching control state when the operating power control mode is switched. This flag becomes 1 when the OPCM bit is written, and 0 when mode transition completes. Read this flag and confirm that it is 0 before proceeding.

10.2.9 SOPCCR : Sub Operating Power Control Register

Base address: SYSC = 0x4001_E000

Offset address: 0x0AA

Bit position:	7	6	5	4	3	2	1	0
Bit field:	—	—	—	SOPCMTSF	—	—	—	SOPCM
Value after reset:	0	0	0	0	0	0	0	0

Bit	Symbol	Function	R/W
0	SOPCM	Sub Operating Power Control Mode Select 0: Other than Subosc-speed mode 1: Subosc-speed mode	R/W
3:1	—	These bits are read as 0. The write value should be 0.	R/W
4	SOPCMTSF	Operating Power Control Mode Transition Status Flag 0: Transition completed 1: During transition	R
7:5	—	These bits are read as 0. The write value should be 0.	R/W

Note: If the security attribution is configured as Secure:
- Secure access and Non-secure read access are allowed
- Non-secure write access is ignored, and TrustZone access error is not generated.

If the security attribution is configured as Non-secure:
- Secure and Non-secure access are allowed.

Note: Set the PRCR.PRC1 bit to 1 (write enabled) before rewriting this register.

The SOPCCR register is used to reduce power consumption in Normal mode, Sleep mode, and Snooze mode. Setting this register initiates entry to and exit from Subosc-speed mode. Subosc-speed mode is available only when using the sub-clock oscillator or LOCO without dividing the frequency.

For the procedure to change operating power control modes, see section 10.5. Function for Lower Operating Power Consumption.

To use Subosc-speed mode, the PSMC and the SRMPSCR registers must be set. See section 10.2.13. PSMCR : Power Save Memory Control Register and section 10.2.14. SRMPSCR : SRAM Power State Control Register for details.

SOPCM bit (Sub Operating Power Control Mode Select)

The SOPCM bit selects the operating power control mode in Normal mode, Sleep mode, and Snooze mode. Setting this bit to 1 allows transition to Subosc-speed mode. Setting this bit to 0 allows a return to the operating mode (set in OPCCR.OPCM[1:0]) before the transition to Subosc-speed mode.

Table 10.4 shows the relationship between the operating power control modes, the OPCM[1:0], and SOPCM bits settings.

Writing to SOPCCR.SOPCM is prohibited while the MCU is under the following conditions:

- The MCU is in Sleep or Snooze mode, the MCU transitions to Normal mode from Sleep, Snooze, or Software Standby mode, the MCU transitions to Sleep, Snooze, or Software Standby mode from Normal mode, or the MCU is in transfer state when in operating power mode.
- Flash is in programming mode.
- MOSC is operating (MOSCCR.MOSTP bit is 0), HOCO is operating (HOCOCR.HCSTP bit is 0), or MOCO is operating (MOCOCR.MCSTP bit is 0).
- PLL is operating (PLLCR.PLLSTP bit is 0).
- PLL_RTC is operating (PLLRTCCR.PLLRTCSTP bit is 0).
- The value of SCKDIVCR.ICK[2:0] register is not equal to 000b.
- The data flash is disabled (DFLCTL.DFLEN bit is 0).

SOPCMTSF flag (Operating Power Control Mode Transition Status Flag)

The SOPCMTSF flag indicates the switching control state when the operating power control mode is switched to or from Subosc-speed mode. This flag becomes 1 when the SOPCM bit is written, and 0 when mode transition completes. Read this flag and confirm that it is 0 before proceeding.

Table 10.4 shows each operating power control mode.

Table 10.4 Operating power control mode

Operating power control mode	OPCM[1:0] bits	SOPCM bit	Power consumption
High-speed mode	00b	0	High
Middle-speed mode	01b	0	↓
Low-speed mode	11b	0	↓
Subosc-speed mode	xxb	1	Low

10.2.10 SNZCR : Snooze Control Register

Base address: SYSC = 0x4001_E000

Offset address: 0x092

Bit position:	7	6	5	4	3	2	1	0
Bit field:	SNZE	—	—	—	—	—	SNZDTCEN	RXDREQEN
Value after reset:	0	0	0	0	0	0	0	0

Bit	Symbol	Function	R/W
0	RXDREQEN	RXD0 Snooze Request Enable 0: Ignore RXD0 falling edge in Software Standby mode 1: Detect RXD0 falling edge in Software Standby mode	R/W
1	SNZDTCEN	DTC Enable in Snooze mode 0: Disable DTC operation 1: Enable DTC operation	R/W
6:2	—	These bits are read as 0. The write value should be 0.	R/W
7	SNZE	Snooze mode Enable 0: Disable Snooze mode 1: Enable Snooze mode	R/W

Note: If the security attribution is configured as Secure:
- Secure access and Non-secure read access are allowed
- Non-secure write access is ignored, and TrustZone access error is not generated.

If the security attribution is configured as Non-secure:
- Secure and Non-secure access are allowed.

Note: Set the PRCR.PRC1 bit to 1 (write enabled) before rewriting this register.

RXDREQEN bit (RXD0 Snooze Request Enable)

The RXDREQEN bit specifies whether to detect a falling edge of the RXD0 pin in Software Standby mode. This bit can be used only when SCI0 is operating in asynchronous mode. To detect a falling edge of the RXD0 pin, set this bit before entering Software Standby mode. When this bit is set to 1, a falling edge of the RXD0 pin in Software Standby mode causes the MCU to enter Snooze mode.

SNZDTCEN bit (DTC Enable in Snooze mode)

The SNZDTCEN bit specifies whether to use the DTC and SRAM in Snooze mode. To use the DTC and SRAM in Snooze mode, set this bit to 1 before entering Software Standby mode. When this bit is set to 1, the DTC can be activated by setting IELSRn register.

SNZE bit (Snooze mode Enable)

The SNZE bit specifies whether to enable a transition from Software Standby mode to Snooze mode. To use Snooze mode, set this bit to 1 before entering Software Standby mode. When this bit is set to 1, a trigger as shown in Table 10.8 in Software Standby mode causes the MCU to enter Snooze mode. After the MCU transitions from Software Standby mode or Snooze mode to Normal mode, set 0 to the SNZE bit once then set it before re-entering Software Standby mode. For details, see section 10.8. Snooze Mode.

10.2.11 SNZEDCR0 : Snooze End Control Register 0

Base address: SYSC = 0x4001_E000

Offset address: 0x094

Bit position:	7	6	5	4	3	2	1	0
Bit field:	SCI0UMTED	—	—	AD0UMTED	AD0MATED	DTCNZRED	DTCZRED	AGTUNFED
Value after reset:	0	0	0	0	0	0	0	0

Bit	Symbol	Function	R/W
0	AGTUNFED	AGT1 Underflow Snooze End Enable 0: Disable the snooze end request 1: Enable the snooze end request	R/W
1	DTCZRED	Last DTC Transmission Completion Snooze End Enable 0: Disable the snooze end request 1: Enable the snooze end request	R/W
2	DTCNZRED	Not Last DTC Transmission Completion Snooze End Enable 0: Disable the snooze end request 1: Enable the snooze end request	R/W
3	AD0MATED	ADC12 Compare Match Snooze End Enable 0: Disable the snooze end request 1: Enable the snooze end request	R/W
4	AD0UMTED	ADC12 Compare Mismatch Snooze End Enable 0: Disable the snooze end request 1: Enable the snooze end request	R/W
6:5	—	These bits are read as 0. The write value should be 0.	R/W
7	SCI0UMTED	SCI0 Address Mismatch Snooze End Enable 0: Disable the snooze end request 1: Enable the snooze end request	R/W

Note: If the security attribution is configured as Secure:
- Secure access and Non-secure read access are allowed
- Non-secure write access is ignored, and TrustZone access error is not generated.

If the security attribution is configured as Non-secure:
- Secure and Non-secure access are allowed.

Note: Set the PRCR.PRC1 bit to 1 (write enabled) before rewriting this register.

The SNZEDCR0 register controls the condition of switching from Snooze mode to Software Standby mode. In order to use a trigger shown in Table 10.9 as a condition to switch from Snooze mode to Software Standby mode, the corresponding bit in the SNZEDCR0 register must be set to 1.

The event that is used to return from snooze mode to normal mode as shown in Table 10.3 must not be enabled in the SNZEDCR0 register.

AGTUNFED bit (AGT1 Underflow Snooze End Enable)

The AGTUNFED bit specifies whether to enable a transition from Snooze mode to Software Standby mode on an AGT1 underflow. For details on the trigger conditions, see section 21, Low Power Asynchronous General Purpose Timer (AGTW).

DTCZRED bit (Last DTC Transmission Completion Snooze End Enable)

The DTCZRED bit specifies whether to enable a transition from Snooze mode to Software Standby mode on completion of the last DTC transmission, that is, when CRA or CRB registers in the DTC is 0. For details on the trigger conditions, see section 16, Data Transfer Controller (DTC).

DTCNZRED bit (Not Last DTC Transmission Completion Snooze End Enable)

The DTCNZRED bit specifies whether to enable a transition from Snooze mode to Software Standby mode on completion of each DTC transmission, that is, when CRA or CRB registers in the DTC is not 0. For details on the trigger conditions, see section 16, Data Transfer Controller (DTC).

AD0MATED bit (ADC12 Compare Match Snooze End Enable)

The AD0MATED bit specifies whether to enable a transition from Snooze mode to Software Standby mode on an ADC120 event when a conversion result matches the expected data. For details on the trigger conditions, see section 35, 12-Bit A/D Converter (ADC12).

AD0UMTED bit ()

The AD0UMTED bit specifies whether to enable a transition from Snooze mode to Software Standby mode on an ADC120 event when the conversion result does not match the expected data. For details on the trigger conditions, see section 35, 12-Bit A/D Converter (ADC12).

SCI0UMTED bit (SCI0 Address Mismatch Snooze End Enable)

The SCI0UMTED bit specifies whether to enable a transition from Snooze mode to Software Standby mode on an SCI0 event when an address received in Software Standby mode does not match the expected data. For details on the trigger conditions, see section 25, Serial Communications Interface (SCI). Only set this bit to 1 when SCI0 operates in asynchronous mode.

10.2.12 SNZREQCR0 : Snooze Request Control Register 0

Base address: SYSC = 0x4001_E000

Offset address: 0x098

Bit position:	31	30	29	28	27	26	25	24	23	22	21	20	19	18	17	16
Bit field:	—	SNZREQEN30	SNZREQEN29	SNZREQEN28	—	—	SNZREQEN25	SNZREQEN24	—	—	—	—	—	—	—	—
Value after reset:	0	0	0	0	0	0	0	0	0	0	0	0	0	0	0	0

Bit position:	15	14	13	12	11	10	9	8	7	6	5	4	3	2	1	0
Bit field:	SNZREQEN15	SNZREQEN14	SNZREQEN13	SNZREQEN12	SNZREQEN11	SNZREQEN10	SNZREQEN9	SNZREQEN8	SNZREQEN7	SNZREQEN6	SNZREQEN5	SNZREQEN4	SNZREQEN3	SNZREQEN2	SNZREQEN1	SNZREQEN0
Value after reset:	0	0	0	0	0	0	0	0	0	0	0	0	0	0	0	0

Bit	Symbol	Function	R/W
0	SNZREQEN0	Enable IRQ0 pin snooze request 0: Disable the snooze request 1: Enable the snooze request	R/W
1	SNZREQEN1	Enable IRQ1 pin snooze request 0: Disable the snooze request 1: Enable the snooze request	R/W

Bit	Symbol	Function	R/W
2	SNZREQEN2	Enable IRQ2 pin snooze request 0: Disable the snooze request 1: Enable the snooze request	R/W
3	SNZREQEN3	Enable IRQ3 pin snooze request 0: Disable the snooze request 1: Enable the snooze request	R/W
4	SNZREQEN4	Enable IRQ4 pin snooze request 0: Disable the snooze request 1: Enable the snooze request	R/W
5	SNZREQEN5	Enable IRQ5 pin snooze request 0: Disable the snooze request 1: Enable the snooze request	R/W
6	SNZREQEN6	Enable IRQ6 pin snooze request 0: Disable the snooze request 1: Enable the snooze request	R/W
7	SNZREQEN7	Enable IRQ7 pin snooze request 0: Disable the snooze request 1: Enable the snooze request	R/W
8	SNZREQEN8	Enable IRQ8 pin snooze request 0: Disable the snooze request 1: Enable the snooze request	R/W
9	SNZREQEN9	Enable IRQ9 pin snooze request 0: Disable the snooze request 1: Enable the snooze request	R/W
10	SNZREQEN10	Enable IRQ10 pin snooze request 0: Disable the snooze request 1: Enable the snooze request	R/W
11	SNZREQEN11	Enable IRQ11 pin snooze request 0: Disable the snooze request 1: Enable the snooze request	R/W
12	SNZREQEN12	Enable IRQ12 pin snooze request 0: Disable the snooze request 1: Enable the snooze request	R/W
13	SNZREQEN13	Enable IRQ13 pin snooze request 0: Disable the snooze request 1: Enable the snooze request	R/W
14	SNZREQEN14	Enable IRQ14 pin snooze request 0: Disable the snooze request 1: Enable the snooze request	R/W
15	SNZREQEN15	Enable IRQ15 pin snooze request 0: Disable the snooze request 1: Enable the snooze request	R/W
23:16	—	These bits are read as 0. The write value should be 0.	R/W
24	SNZREQEN24	Enable RTC alarm snooze request 0: Disable the snooze request 1: Enable the snooze request	R/W
25	SNZREQEN25	Enable RTC period snooze request 0: Disable the snooze request 1: Enable the snooze request	R/W
27:26	—	These bits are read as 0. The write value should be 0.	R/W
28	SNZREQEN28	Enable AGT1 underflow snooze request 0: Disable the snooze request 1: Enable the snooze request	R/W

Bit	Symbol	Function	R/W
29	SNZREQEN29	Enable AGT1 compare match A snooze request 0: Disable the snooze request 1: Enable the snooze request	R/W
30	SNZREQEN30	Enable AGT1 compare match B snooze request 0: Disable the snooze request 1: Enable the snooze request	R/W
31	—	This bit is read as 0. The write value should be 0.	R/W

Note: If the security attribution is configured as Secure:
- Secure access and Non-secure read access are allowed
- Non-secure write access is ignored, and TrustZone access error is not generated.

If the security attribution is configured as Non-secure:
- Secure and Non-secure access are allowed.

Note: Set the PRCR.PRC1 bit to 1 (write enabled) before rewriting this register.

The SNZREQCR0 register controls which trigger causes the MCU to switch from Software Standby mode to Snooze mode. If a trigger is selected as a request to cancel Software Standby mode by setting the WUPENn register, see section 12, Interrupt Controller Unit (ICU), the MCU enters Normal mode when the trigger is generated while the associated bit of the SNZREQCR0 is 1. The setting of the WUPENn register always has higher priority than the setting of the SNZREQCR0 register. For details, see section 10.8. Snooze Mode and section 12, Interrupt Controller Unit (ICU).

10.2.13 PSMCR : Power Save Memory Control Register

Base address: SYSC = 0x4001_E000

Offset address: 0x09F

Bit position:	7	6	5	4	3	2	1	0
Bit field:	—	—	PSMC5	PSMC4	PSMC3	PSMC2	PSMC1	PSMC0
Value after reset:	0	0	0	0	0	0	0	0

Bit	Symbol	Function	R/W
0	PSMC0	Power Save Memory Control bit 0 0: The SRAM data of 0x2000_0000 – 0x2000_3FFF area transitions to standby state and is retained in Software Standby mode or in normal mode at SRMPSCR.SPSC[0] = 1. 1: The SRAM data of 0x2000_0000 – 0x2000_3FFF area is powered off and not retained in Software Standby mode or in normal mode at SRMPSCR.SPSC[0] = 1.	R/W
1	PSMC1	Power Save Memory Control bit 1 0: The SRAM data of 0x2000_4000 – 0x2000_7FFF area transitions to standby state and is retained in Software Standby mode or in normal mode at SRMPSCR.SPSC[1] = 1. 1: The SRAM data of 0x2000_4000 – 0x2000_7FFF area is powered off and not retained in Software Standby mode or in normal mode at SRMPSCR.SPSC[1] = 1.	R/W
2	PSMC2	Power Save Memory Control bit 2 0: The SRAM data of 0x2000_8000 – 0x2000_BFFF area transitions to standby state and is retained in Software Standby mode or in normal mode at SRMPSCR.SPSC[2] = 1. 1: The SRAM data of 0x2000_8000 – 0x2000_BFFF area is powered off and not retained in Software Standby mode or in normal mode at SRMPSCR.SPSC[2] = 1.	R/W
3	PSMC3	Power Save Memory Control bit 3 0: The SRAM data of 0x2000_C000 – 0x2000_FFFF area transitions to standby state and is retained in Software Standby mode or in normal mode at SRMPSCR.SPSC[3] = 1. 1: The SRAM data of 0x2000_C000 – 0x2000_FFFF area is powered off and not retained in Software Standby mode or in normal mode at SRMPSCR.SPSC[3] = 1.	R/W

Bit	Symbol	Function	R/W
4	PSMC4	Power Save Memory Control bit 4 0: The SRAM data of 0x2001_0000 – 0x2001_3FFF area transitions to standby state and is retained in Software Standby mode or in normal mode at SRMPSCR.SPSC[4] = 1. 1: The SRAM data of 0x2001_0000 – 0x2001_3FFF area is powered off and not retained in Software Standby mode or in normal mode at SRMPSCR.SPSC[4] = 1.	R/W
5	PSMC5	Power Save Memory Control bit 5 0: The SRAM data of 0x2001_4000 – 0x2001_7FFF area transitions to standby state and is retained in Software Standby mode or in normal mode at SRMPSCR.SPSC[5] = 1. 1: The SRAM data of 0x2001_4000 – 0x2001_7FFF area is powered off and not retained in Software Standby mode or in normal mode at SRMPSCR.SPSC[5] = 1.	R/W
7:6	—	These bits are read as 0. The write value should be 0.	R/W

Note: If the security attribution is configured as Secure:
- Secure access and Non-secure read access are allowed
- Non-secure write access is ignored, and TrustZone access error is not generated.

If the security attribution is configured as Non-secure:
- Secure and Non-secure access are allowed.

Note: Set the PRCR.PRC1 bit to 1 (write enabled) before rewriting this register.

PSMCn bits (Power Save Memory Control n bits (n = 0 to 5))

The SRAM area with this bit set to 1 is powered off when the MCU transitions to Software Standby mode or when SRMPSCR.SPSC bit is 1 in normal mode, the SRAM area is not accessible, and the data of the SRAM area is not retained.

On the other hand, the SRAM area with this bit set to 0 transitions to standby state when the MCU transitions to Software Standby mode or when SRMPSCR.SPSC bit is 1 in normal mode, the SRAM area is not accessible, and the data of the SRAM area is retained.

Set the PSMCR register before executing a WFI instruction or writing to SRMPSCR register.

10.2.14 SRMPSCR : SRAM Power State Control Register

Base address: SYSC = 0x4001_E000

Offset address: 0x0F0

Bit position:	7	6	5	4	3	2	1	0
Bit field:	—	—	SPSC[5]	SPSC[4]	SPSC[3]	SPSC[2]	SPSC[1]	SPSC[0]
Value after reset:	0	0	0	0	0	0	0	0

Bit	Symbol	Function	R/W
0	SPSC[0]	SRAM Power State Control bit 0 0: The SRAM data of 0x2000_0000 to 0x2000_3FFF area is in normal state. 1: The SRAM data of 0x2000_0000 to 0x2000_3FFF area is in low power state and not accessible. The retention capability depends on PSMCR.PSMC[0].	R/W
1	SPSC[1]	SRAM Power State Control bit 1 0: The SRAM data of 0x2000_4000 to 0x2000_7FFF area is in normal state. 1: The SRAM data of 0x2000_4000 to 0x2000_7FFF area is in low power state and not accessible. The retention capability depends on PSMCR.PSMC[1].	R/W
2	SPSC[2]	SRAM Power State Control bit 2 0: The SRAM data of 0x2000_8000 to 0x2000_BFFF area is in normal state. 1: The SRAM data of 0x2000_8000 to 0x2000_BFFF area is in low power state and not accessible. The retention capability depends on PSMCR.PSMC[2].	R/W
3	SPSC[3]	SRAM Power State Control bit 3 0: The SRAM data of 0x2000_C000 to 0x2000_FFFF area is in normal state. 1: The SRAM data of 0x2000_C000 to 0x2000_FFFF area is in low power state and not accessible. The retention capability depends on PSMCR.PSMC[3].	R/W

Bit	Symbol	Function	R/W
4	SPSC[4]	SRAM Power State Control bit 4 0: The SRAM data of 0x2001_0000 – 0x2001_3FFF area is in normal state. 1: The SRAM data of 0x2001_0000 to 0x2001_3FFF area is in low power state and not accessible. The retention capability depends on PSMCR.PSMC[4].	R/W
5	SPSC[5]	SRAM Power State Control bit 5 0: The SRAM data of 0x2001_4000 to 0x2001_7FFF area is in normal state. 1: The SRAM data of 0x2001_4000 to 0x2001_7FFF area is in low power state and not accessible. The retention capability depends on PSMCR.PSMC[5].	R/W
7:6	—	These bits are read as 0. The write value should be 0.	R/W

The SRMPSCR register is protected by the PRCR.PRC1 bit.

Writing to this register is allowed only when the frequency of ICLK is 8 MHz or less.

SPSC[5:0] bits (SRAM Power State Control bits)

When SPSC bit is set to 1 in normal mode, the corresponding SRAM area transitions to SRAM low power state. There are two types of SRAM low power state:

- Power off state
- Standby state.

In power off state, SRAM is not accessible and not retained. In standby state, SRAM is not accessible but retained.

Which low power state the SRAM transitions to depends on the PSMCR.PSMC bit.

When the PSMCR.PSMC bit corresponding to a SRAM area is 1, setting 1 to SPSC bit causes the SRAM area to transition to power off state. On the other hand, when the PSMCR.PSMC bit corresponding to a SRAM area is 0, setting 1 to SPSC bit causes the SRAM area to transition to standby state.

Due to the power consumption limit in Subosc-speed mode, this SPSC bit must be set to reduce SRAM power consumption before transitioning to Subosc-speed mode.

There are two options for reducing power consumption of SRAM in Subosc-speed mode by setting SPSC bit.

Option 1 — The selected two[*1] SRAM areas are at powered off state in Subosc-speed mode.

1. Before transitioning to Subosc-speed mode, write to the SPSC bit according to the following steps:
   Refer to (1-4) of section 10.5.3. Operating Power Control Mode Change Procedure for the procedure to transition to Subosc-speed mode.
   (a) Set 1 to the selected two bits of PSMCR before transitioning to Subosc-speed mode.
   (b) Set 1 to the one bit of the selected two bits in SRMPSCR.
   (c) Set 1 to the remaining bit of the selected 2 bits in SRMPSCR. Do not change other bits of SRMPSCR. The selected 2 bits of SRMPSCR are 1 at this time and the corresponding two SRAM areas are stopped and not retained in power off state.
2. After returning to the original operating power control mode (High-speed, Middle-speed or Low-speed mode) from the Subosc-speed mode, write to the SPSC bit according to the following step. (Refer to 1-1 of section 10.5.3. Operating Power Control Mode Change Procedure for the procedure to return from Subosc-speed mode.)
   (a) Set 0 to the one bit of the selected two bits in the SRMPSCR. Do not change other bits of SRMPSCR.
   (b) Set 0 to the remaining bit of the selected two bits in the SRMPSCR. Do not change other bits of SRMPSCR. All bits in SRMPSCR are 0 at this time.
   (c) After 1.2 µs has passed, the two SRAM area become accessible.

Note 1. The number of SRAM area that should be powered off by setting PSMCR and SRMPSCR is limited to two. Any number of bits other than 2 is prohibited.

Option 2 — The selected three[*1] SRAM areas are in standby state and retained at Subosc-speed mode.

1. Before transitioning to Subosc-speed mode, write to the SPSC bit according to the following steps:

Refer to (1-4) of section 10.5.3. Operating Power Control Mode Change Procedure for the procedure to transition to Subosc-speed mode.

(a) Set 0 to all bits of PSMCR before transitioning to Subosc-speed mode.

(b) Set 1 to the one bit of the selected three bits in SRMPSCR.

(c) Set 1 to the one bit of the remaining two bits of the selected three bits in SRMPSCR. Do not change other bits of SRMPSCR.

(d) Set 1 to the last bit of the selected three bits in SRMPSCR.
Do not change other bits of SRMPSCR. The selected 3 bits of SRMPSCR are 1 at this time and the corresponding three SRAM areas are stopped and retained in standby state.

2. After returning to the original operating power control mode (High-speed, Middle-speed or Low-speed mode) from the Subosc-speed mode, write to the SPSC bit in the following step. Refer to (1-1) of section 10.5.3. Operating Power Control Mode Change Procedure for the procedure to return from Subosc-speed mode.

(a) Set 0 to the one bit of the selected three bits in the SRMPSCR.

(b) Set 0 to the other one bit of the selected three bits in the SRMPSCR. Do not change other bits of SRMPSCR.

(c) Set 0 to the last bit of the selected three bits in the SRMPSCR. Do not change other bits of SRMPSCR. All bits in SRMPSCR are 0 at this time.

(d) After 600 ns has passed, the stopped SRAM becomes accessible and the retained date of the selected three SRAM can be read.

Note 1. The number of SRAM area that should be stopped and retained in standby state by setting SRMPSCR is limited to three. Any number of bits other than 3 is prohibited.

10.2.15 SYOCDCR : System Control OCD Control Register

Base address: SYSC = 0x4001_E000

Offset address: 0x040E

Bit position:	7	6	5	4	3	2	1	0
Bit field:	DBGEN	—	—	—	—	—	—	—
Value after reset:	0	0	0	0	0	0	0	0

Bit	Symbol	Function	R/W
6:0	—	These bits are read as 0. The write value should be 0.	R/W
7	DBGEN	Debugger Enable bit Set to 1 first in on-chip debug mode. 0: On-chip debugger is disabled 1: On-chip debugger is enabled	R/W

Note: Set the PRCR.PRC1 bit to 1 (write enabled) before rewriting this register.

This register is not controlled by any security attribute register (such as LPMSAR).

SYOCDCR can be written when DBGSTR.CDBGPWRUPREQ = 1 (the debugger is connected).

DBGEN bit (Debugger Enable bit)

The DBGEN bit enables the on-chip debug mode. This bit must be set to 1 first in the on-chip debugger mode.

[Setting condition]

- Writing 1 to the bit when the debugger is connected.

[Clearing condition]

- Power-on reset is generated
- Writing 0 to the bit.

Note: Certain restrictions apply in terms of the MCU states in which the DBGEN bit can be set to 1. For details, see section 2.12.2. Restrictions on connecting an OCD emulator.

10.2.16 LDOCR : LDO Control Register

Base address: SYSC = 0x4001_E000

Offset address: 0x0AC

Bit position:	7	6	5	4	3	2	1	0
Bit field:	—	—	—	—	—	—	—	CHG0
Value after reset:	0	0	0	0	0	0	0	0

Bit	Symbol	Function	R/W
0	CHG0	Charge up 0 0: LDO normal operating mode 1: LDO high performance mode	R/W
7:1	—	These bits are read as 0. The write value should be 0.	R/W

It is prohibited to change this register except in High-speed mode with ICLK = 8 MHz.

LDOCR.CHG0 = 1 is allowed only in High-speed mode with ICLK ≥ 8 MHz.

See section 10.5.2. Setting Operating Power Control Mode for the detailed usage of this register.

CHG0 bit (Charge up 0)

Setting this bit to 1 increases the current capability of the LDO.

MOCOCR.MCSTP must be set to 0 before transitioning to Software Standby mode when using Snooze mode (CHG0 = 1).

10.3 Reducing Power Consumption by Switching Clock Signals

The clock frequency changes when the SCKDIVCR register is set.

For information on module and clock associations, see section 8.2.2. SCKDIVCR : System Clock Division Control Register.

10.4 Module-Stop Function

The module stop function can stop the clock supply set for each peripheral module.

When the MSTPmi bit (m = A to E, i = 31 to 0) in MSTPCRn (n = A to E) is set to 1, the specified module stops operating and enters the module-stop state, but the CPU continues to operate independently. Setting the MSTPmi bit to 0 cancels the module-stop state, allowing the module to resume operation at the end of the bus cycle.

After a reset is canceled, all modules other than the DMAC, DTC and SRAMn modules are placed in the module-stop state. Do not access the module while the corresponding MSTPmi bit is 1. Additionally, do not set 1 to the MSTPmi bit while the corresponding module is accessed.

10.5 Function for Lower Operating Power Consumption

By selecting an appropriate operating power consumption control mode according to the operating frequency, power consumption can be reduced in Normal mode, Sleep mode, and Snooze mode.

10.5.1 Operating Range

Figure 10.2 to Figure 10.5 show the ICLK operating voltages and frequencies. Other clock frequencies such as FCLK, PCLKA, PCLKB, PCLKC, and PCLKD are limited in relation to ICLK frequency. For details, see section 8, Clock Generation Circuit.

High-speed mode

When LDOCR.CHG0 = 0, the maximum operating frequency of ICLK is 8 MHz. When LDOCR.CHG0 = 1, the maximum operating frequency of ICLK is 80 MHz and the minimum operating frequency of ICLK is 8 MHz.

The operating voltage range is from 1.6 V to 3.6 V when ICLK is lower than 4 MHz. The operating voltage range is from 1.8 V to 3.6 V when ICLK is higher than or equal to 4 MHz.

During FLASH programming or erasure, the operating frequency range is from 1 MHz to 80 MHz when the operating voltage range is from 1.8 V to 3.6 V. During FLASH programming or erasure, the maximum operating frequency of ICLK is 4 MHz when the operating voltage range is from 1.6 V to 1.8 V.

Figure 10.2 shows the operating voltages and frequencies in High-speed mode.

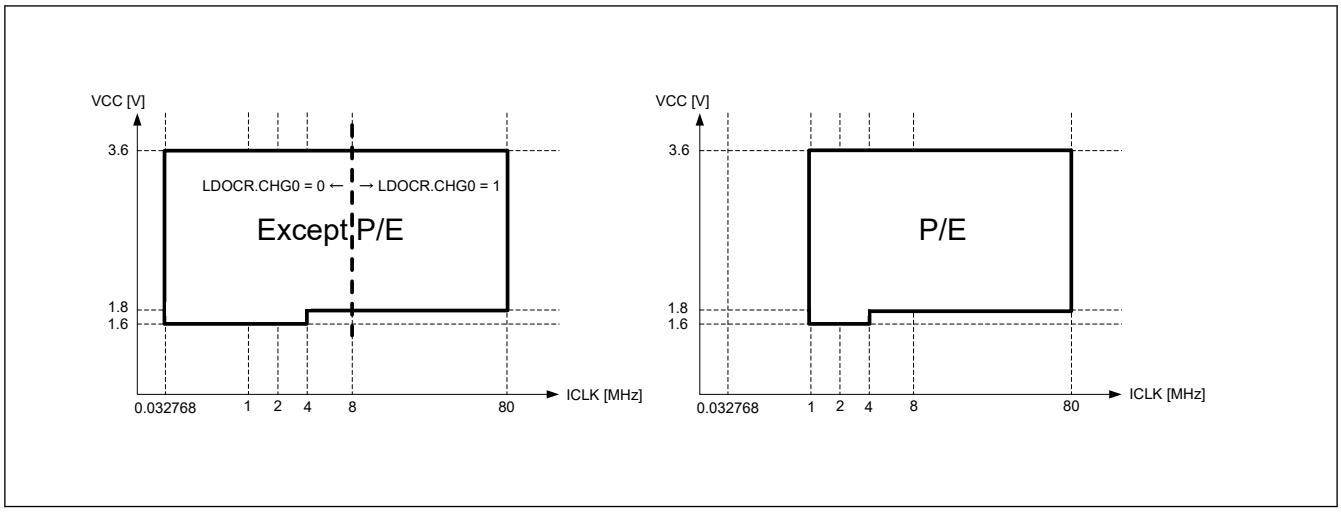

Figure 10.2 Operating voltages and frequencies in High-speed mode

Middle-speed mode

The power consumption in this mode is lower than that in High-speed mode under the same condition. The maximum operating frequency of ICLK is 8 MHz. The operating voltage range is from 1.6 V to 3.6 V when ICLK is lower than 4 MHz. The operating voltage range is from 1.8 V to 3.6 V when ICLK is higher than or equal to 4 MHz.

During FLASH programming or erasure, the operating frequency range is from 1 MHz to 8 MHz when the operating voltage range is from 1.8 V to 3.6V. During FLASH programming or erasure, the maximum operating frequency of ICLK is 4 MHz when the operating voltage range is from 1.6 V to 1.8 V.

Figure 10.3 shows the operating voltages and frequencies in Middle-speed mode.

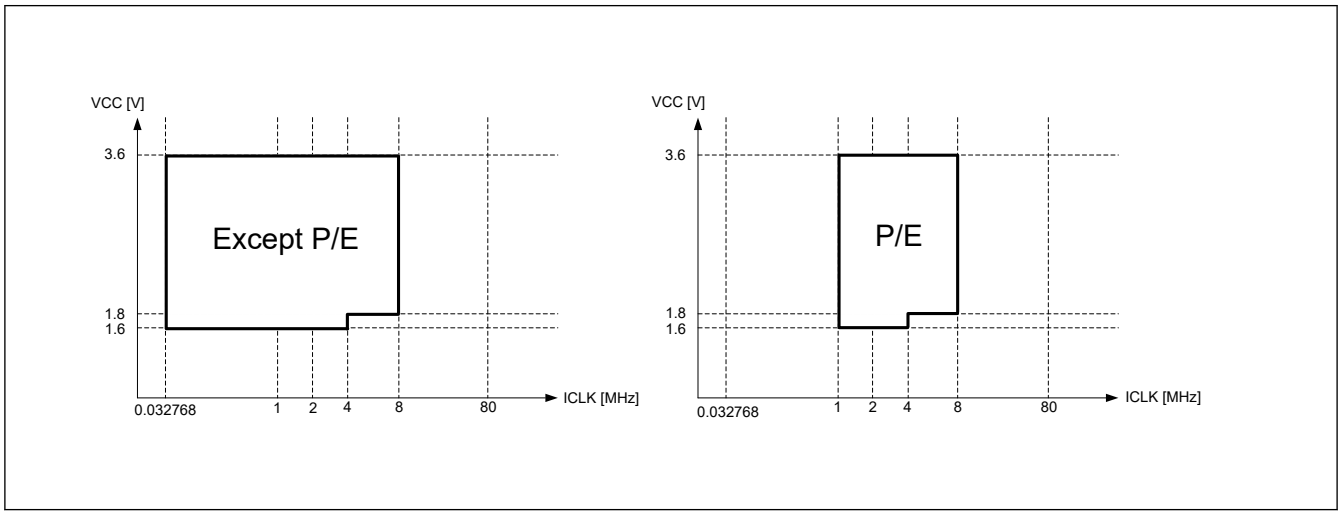

Figure 10.3 Operating voltages and frequencies in Middle-speed mode

Low-speed mode

The maximum operating frequency of ICLK is 1 MHz. The operating voltage range is from 1.6 V to 3.6 V. During FLASH programming or erasure, the operating frequency is 1 MHz and the operating voltage range is from 1.6 V to 3.6 V.

Figure 10.4 shows the operating voltages and frequencies in Low-speed mode.

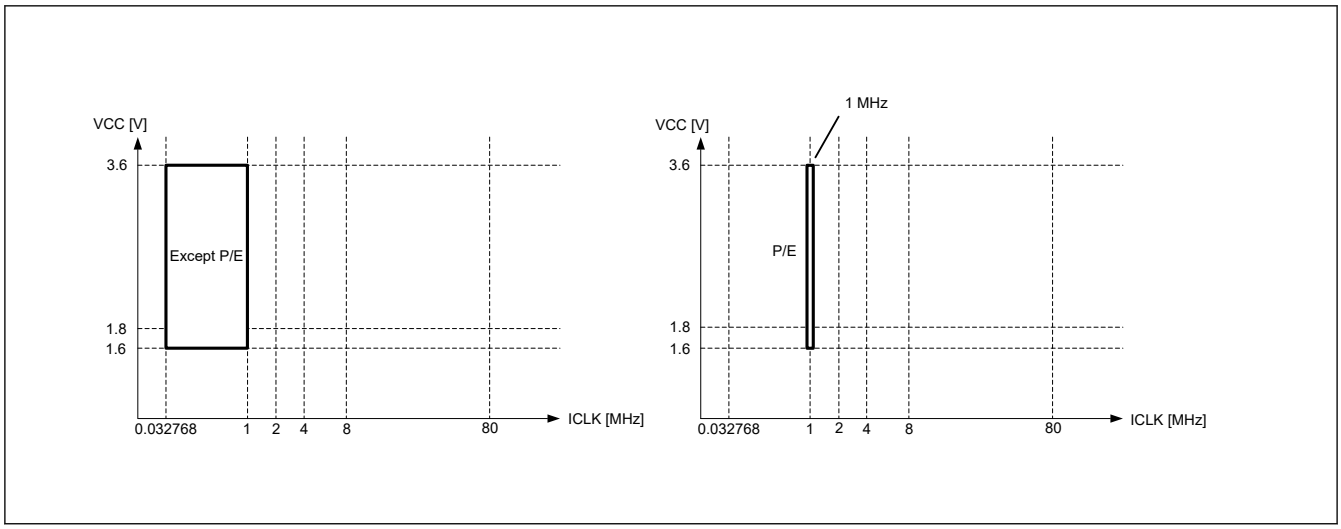

Figure 10.4 Operating voltages and frequencies in Low-speed mode

Subosc-speed mode

The maximum operating frequency of ICLK is 37.6832 kHz. The operating voltage range is from 1.6 V to 3.6 V. P/E operations for flash memory are prohibited. Using the oscillators other than Sub-clock oscillator or Low-speed on-chip oscillator is prohibited.

Figure 10.5 shows the operating voltages and frequencies in Subosc-speed mode.

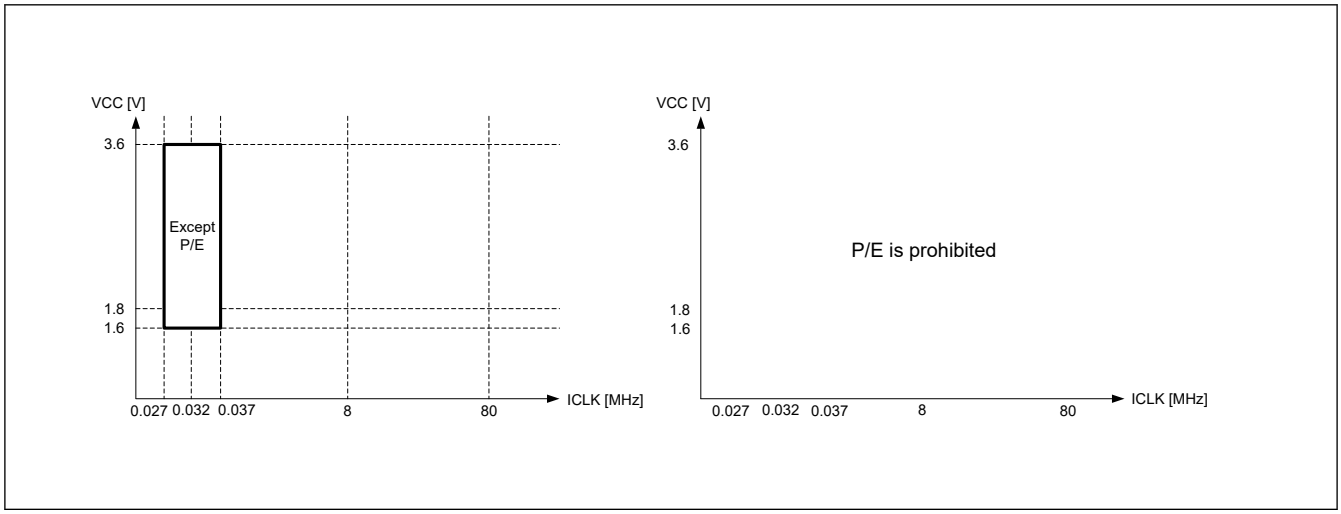

Figure 10.5 Operating voltages and frequencies in Subosc-speed mode

10.5.2 Setting Operating Power Control Mode

Make sure that the operating condition (the frequency range) is always within the specified range before and after switching the operating power control modes. Also, Table 10.5 shows the oscillators that can be used in each mode.

Table 10.5 Available oscillators in each mode

Mode	Oscillator							
	PLL	High-speed on-chip oscillator	Middle-speed on-chip oscillator	Low-speed on-chip oscillator	Main clock oscillator	Sub-clock oscillator	IWDT-dedicated on-chip oscillator	PLL_RTC
High-speed	Available	Available	Available	Available	Available	Available	Available	Available
Middle-speed	Available	Available	Available	Available	Available	Available	Available	Available
Low-speed	N/A	Available	Available	Available	Available	Available	Available	N/A
Subosc-speed	N/A	N/A	N/A	Available	N/A	Available	Available	N/A

10.5.3 Operating Power Control Mode Change Procedure

The following descriptions are procedures for switching operating power control mode:

Note:
- It is prohibited to change LDOCR.CHG0 except High-speed mode with ICLK = 8 MHz.
- LDOCR.CHG0 = 1 is allowed only in High-speed mode with ICLK ≥ 8 MHz.
- Transition to other operating power control mode is allowed only when LDOCR.CHG0 = 0.

Table 10.6 Operating power control mode transition overview

<table>
<tr><th colspan="6"></th><th colspan="7">Next state</th></tr>
<tr><th colspan="2" rowspan="5">ICLK frequency</th><th colspan="4"></th><th>32 kHz</th><th>32 kHz to 1 MHz</th><th>32 kHz to 8 MHz</th><th>8 MHz*1</th><th>f1 MHz (8 < f1 ≤ 32)</th><th>f2 MHz (32 < f2 ≤ 48)</th><th>f3 MHz (48 < f3 ≤ 80)</th></tr>
<tr><th colspan="2" rowspan="4">OPCCR register</th><th colspan="3"></th><th>Sosc-speed</th><th>Low-speed</th><th>Middle-speed</th><th>High-speed</th><th colspan="3">High-speed</th></tr>
<tr><th colspan="3" rowspan="3">LDOCR register</th><th colspan="4">LDO normal operating mode</th><th colspan="3">LDO high performance mode</th></tr>
<tr><th colspan="2" rowspan="2">MEMWAIT register</th><th colspan="4">No wait</th><th>No wait</th><th>1 wait</th><th>2 wait</th></tr>
<tr><th>FCLK max freq.</th><th colspan="4">ICLK × 1/1</th><th colspan="2">ICLK × 1/1</th><th>ICLK × 1/2</th></tr>
<tr><th rowspan="7">Current state</th><th>32 kHz</th><th>Subosc-speed</th><th rowspan="4">LDO normal operating mode</th><th rowspan="4">No wait</th><th rowspan="4">ICLK × 1/1</th><td>—</td><td colspan="3">(1-1)</td><td colspan="3" rowspan="3">Not allowed</td></tr>
<tr><th>32 kHz to 1 MHz</th><th>Low-speed</th><td rowspan="3">(1-4)</td><td>—</td><td colspan="2">(1-2)</td></tr>
<tr><th>32 kHz to 8 MHz</th><th>Middle-speed</th><td rowspan="2">(1-5)</td><td>—</td><td>(1-3)</td></tr>
<tr><th>8 MHz*1</th><th>High-speed</th><td>(1-6)</td><td>—</td><td colspan="2">(2-1)</td><td>(2-2)</td></tr>
<tr><th>f1 MHz (8 < f1 ≤ 32)</th><th rowspan="3">High-speed</th><th rowspan="3">LDO high performance mode</th><th>No wait</th><th rowspan="2">ICLK × 1/1</th><td colspan="3" rowspan="3">Not allowed</td><td rowspan="3">(2-5)</td><td>—</td><td>(2-3)</td><td rowspan="3">(2-4)</td></tr>
<tr><th>f2 MHz (32 < f2 ≤ 48)</th><th>1 wait</th><td rowspan="2">(2-6)</td><td>—</td></tr>
<tr><th>f3 MHz (48 < f3 ≤ 80)</th><th>2 wait</th><th>ICLK × 1/2</th><td>(2-7)</td><td>—</td></tr>
</table>

Note 1. The “8 MHz” is described as the frequency assumed to be mainly used in High-speed mode. But in fact the switching procedure of (1-x) allows the selection of frequency below 8 MHz shown in Figure 10.2 (x = 1, 2, 3, 4, 5, and 6).

(1) Operating power control mode transition within ICLK = 8 MHz or slower

(1-1) Switching from Subosc-speed mode to High-speed, Middle-speed, or Low speed mode

1. (Operation in Subosc-speed mode)
2. Confirm that the SOPCCR.SOPCMTSF flag is 0 (indicating not during transition).
3. Set SOPCCR.SOPCM bit to 0 (High-speed, Middle-speed, or Low speed mode (MCU returns to the operating mode (operating mode set by OPCCR.OPCM[1:0]) before the transition to Subosc-speed mode)).
4. Confirm that the SOPCCR.SOPCMTSF flag is 0 (indicating not during transition).
5. Turn on the oscillator needed in High-speed, Middle-speed, or Low-speed mode.

Set the frequency of each clock to the maximum or less operating frequency for High-speed, Middle-speed, or Low speed mode.

6. Set PSMCR and SRMPSCR registers properly according to section 10.2.13. PSMCR : Power Save Memory Control Register and section 10.2.14. SRMPSCR : SRAM Power State Control Register.
7. (Operation in High-speed, Middle-speed, or Low-speed mode)

(1-2) Switching from Low-speed mode to High-speed or Middle-speed mode

1. (Operation in Low-speed mode)
2. Confirm that the OPCCR.OPCMTSF flag is 0 (not indicated during transition).
3. Set the OPCCR.OPCM bit to 00b (High-speed mode) or 01b (Middle-speed mode).
4. Confirm that the OPCCR.OPCMTSF flag is 0 (not indicated during transition).
5. Turn on any oscillator needed in High-speed or Middle-speed mode.
6. Set the frequency of each clock to the maximum or less operating frequency for High-speed or Middle-speed mode.
7. (Operation in High-speed mode or Middle-speed mode)

(1-3) Switching from Middle-speed to High-speed mode

1. (Operation in Middle-speed mode)
2. Confirm that the OPCCR.OPCMTSF flag is 0 (not indicating during transition).
3. Set the OPCCR.OPCM bit to 00b (High-speed mode).
4. Confirm that the OPCCR.OPCMTSF flag is 0 (not indicated during transition).
5. Turn on any oscillator needed in High-speed mode.
6. Set the frequency of each clock to the maximum or less operating frequency for High-speed mode.
7. (Operation in High-speed mode)

(1-4) Switching from High-speed, Middle-speed, or Low-speed mode to Subosc-speed mode

1. (Operation begins in High-speed, Middle-speed, or Low-speed mode)
2. Set or Confirm that LDOCR.CHG0 is 0.
3. Set PSMCR and SRMPSCR registers properly according to section 10.2.13. PSMCR : Power Save Memory Control Register and section 10.2.14. SRMPSCR : SRAM Power State Control Register.
4. Switch the clock source to sub-clock oscillator. Turn off HOCO, MOCO, LOCO main oscillator and PLL.
5. Confirm that all clock sources other than the sub-clock oscillator are stopped.
6. Confirm that the SOPCCR.SOPCMTSF flag is 0 (indicating not during transition).
7. Set the SOPCCR.SOPCM bit to 1 (Subosc-speed mode).
8. Confirm that the SOPCCR.SOPCMTSF flag is 0 (indicating not during transition).
9. (Operation in Subosc-speed mode)

(1-5) Switching from High-speed or Middle-speed mode to Low-speed mode

1. (Operation begins in High-speed or Middle-speed mode)
2. Set or confirm that LDOCR.CHG0 is 0.
3. Change the oscillator to what is used in Low-speed mode. Set the frequency of clock to the maximum or less operating frequency in Low-speed mode.
4. Turn off the oscillator that is not required in Low-speed mode.
5. Confirm that the OPCCR.OPCMTSF flag is 0 (indicating not during transition).
6. Set the OPCCR.OPCM bit to 11b (Low-speed mode).
7. Confirm that OPCCR.OPCMTSF flag is 0 (indicating not during transition).
8. (Operation is in Low-speed mode)

(1-6) Switching from a High-speed mode to Middle-speed

1. (Operation begins in High-speed mode)
2. Set or confirm that LDOCR.CHG0 is 0.
3. Change the oscillator to what is used in Middle-speed mode. Set the frequency of the clock to the maximum or less operating frequency in Middle-speed mode.
4. Turn off the oscillator that is not required in Middle-speed mode.
5. Confirm that the OPCCR.OPCMTSF flag is 0 (indicating not during transition).
6. Set the OPCCR.OPCM bit to 01b (Middle-speed mode).
7. Confirm that the OPCCR.OPCMTSF flag is 0 (indicating not during transition).
8. (Operation is in Middle-speed mode)

(2) Operating power control mode transition within ICLK = 8 MHz or faster

(2-1) Procedure of switching ICLK frequency from 8 MHz to f1 or f2 MHz (8 < f1 ≤ 32, 32 < f2 ≤ 48)

1. (Operation begins in High-speed mode with LDOCR.CHG0 = 0)
2. Set the frequency of ICLK to 8 MHz.
   At this time, set the clock source to MOCO, and set SCKDIVCR.ICLK[2:0] to 000b.
3. Turn on the oscillator needed for f1 or f2 MHz.
4. Depending on the desired transition destination frequency (f1 or f2 MHz), set the clock division except of ICLK and the memory wait cycle as needed. For details, see section 8.2.2. SCKDIVCR : System Clock Division Control Register and section 8.2.4. MEMWAIT : Memory Wait Cycle Control Register for Code Flash.
5. Set LDOCR.CHG0 to 1.
6. Wait at least 5 µs for stabilization of LDO.
7. Set the SCKSCR to change the clock source from MOCO to the oscillator for f1 or f2 MHz.
   (Make sure ICLK frequency does not exceed 48MHz.)
8. Set SCKDIVCR.ICLK[2:0]
9. (Operation in High-speed mode with f1 or f2 MHz.)

(2-2) Procedure of switching ICLK frequency from 8 MHz to f3 MHz (48 < f3 ≤ 80)

1. (Operation begins in High-speed mode with LDOCR.CHG0 = 0)
2. Set the frequency of ICLK to 8 MHz.
   At this time, set the clock source to MOCO, and set SCKDIVCR.ICLK[2:0] to 000b.
3. Turn on the oscillator needed for f3 MHz.
4. Depending on the desired transition destination frequency (f3 MHz), set the clock division except of ICLK and the memory wait cycle as needed. For details, see section 8.2.2. SCKDIVCR : System Clock Division Control Register and section 8.2.4. MEMWAIT : Memory Wait Cycle Control Register for Code Flash.
5. Set SCKDIVCR.ICLK[2:0] to 001b.
   (The ICLK frequency changes to 4 MHz.)
6. Set LDOCR.CHG0 to 1.
   (At this time, the prohibited state that LDOCR.CHG0 is 1 and ICLK is less than 8 MHz appears, but it is a state in the middle of transition. So, it is specially permitted.)
7. Wait at least 5 µs for stabilization of LDO.
8. Set the SCKSCR to change the clock source from MOCO to the oscillator for f3 MHz.
   (ICLK changes from 4 MHz to the frequency of half of f3 MHz.)
9. Wait more than 30 µs for stabilization of LDO.
10. Set SCKDIVCR.ICLK[2:0] to 000b.
11. (Operation in High-speed mode with f3 MHz.)

(2-3) Procedure of switching ICLK frequency from f1 MHz to f2 MHz (8 < f1 ≤ 32, 32 < f2 ≤ 48)

1. (Operation begins in High-speed mode with f1 MHz and LDOCR.CHG0 = 1)
2. Turn on the oscillator needed for f2 MHz.
3. Depending on the desired transition destination frequency (f2 MHz), set the clock division and the memory wait cycle as needed. For details, see section 8.2.2. SCKDIVCR : System Clock Division Control Register and section 8.2.4. MEMWAIT : Memory Wait Cycle Control Register for Code Flash.
4. Set the SCKSCR to change the clock source from MOCO to the oscillator for f2 MHz.
   (Make sure ICLK frequency does not exceed 48MHz.)
5. Set SCKDIVCR.ICLK[2:0]
6. (Operation in High-speed mode with f2 MHz and LDOCR.CHG0 = 1.)

(2-4) Procedure of switching ICLK frequency from f1 or f2 MHz to f3 MHz (8 < f1 ≤ 32, 32 < f2 ≤ 48, 48 < f3 ≤ 80)

1. (Operation begins in High-speed mode with f1 or f2 MHz and LDOCR.CHG0 = 1. At this time, set SCKDIVCR.ICLK[2:0] to 000b.)
2. Turn on the oscillator needed for f3 MHz.
3. Depending on the desired transition destination frequency (f3 MHz), set the clock division except of ICLK and the memory wait cycle as needed. For details, see section 8.2.2. SCKDIVCR : System Clock Division Control Register and section 8.2.4. MEMWAIT : Memory Wait Cycle Control Register for Code Flash.
4. Set SCKDIVCR.ICLK[2:0] to 001b.
   (ICLK frequency changes to the frequency of the half of f1 or f2 MHz.)
   (At this time, the prohibited state that LDOCR.CHG0 is 1 and ICLK may be less than 8 MHz appears, but it is a state in the middle of transition. So, it is specially permitted.)
5. Set the SCKSCR to change the clock source to the oscillator for f3 MHz.
   (ICLK changes from the frequency of the half of f1 or f2 MHz to the frequency of the half of f3 MHz.)
6. Wait more than 30 µs for stabilization of LDO.
7. Set SCKDIVCR.ICLK[2:0] to 000b.
8. (Operation in High-speed mode with f3 MHz and LDOCR.CHG0 = 1.)

(2-5) Procedure of switching ICLK frequency from f1 or f2 or f3 MHz to 8 MHz

1. (Operation begins in High-speed mode with f1 or f2 or f3 MHz and LDOCR.CHG0 = 1)
2. Change the frequency of ICLK to 8 MHz.
3. Depending on the desired transition destination frequency (8 MHz), set the clock division and the memory wait cycle as needed. For details, see section 8.2.2. SCKDIVCR : System Clock Division Control Register and section 8.2.4. MEMWAIT : Memory Wait Cycle Control Register for Code Flash.
4. Set LDOCR.CHG0 to 0.
5. (Operation begins in High-speed mode with 8 MHz and LDOCR.CHG0 = 0)

(2-6) Procedure of switching ICLK frequency from f2 or f3 MHz to f1 MHz

1. (Operation begins in High-speed mode with f2 or f3 MHz and LDOCR.CHG0 = 1)
2. Change the frequency of ICLK to f1 MHz.
3. Depending on the desired transition destination frequency (f1 MHz), set the clock division and the memory wait cycle as needed. For details, see section 8.2.2. SCKDIVCR : System Clock Division Control Register and section 8.2.4. MEMWAIT : Memory Wait Cycle Control Register for Code Flash.
4. (Operation in High-speed mode with f1 MHz and LDOCR.CHG0 = 1)

(2-7) Procedure of switching ICLK frequency from f3 MHz to f2 MHz

1. (Operation begins in High-speed mode with f3 MHz and LDOCR.CHG0 = 1)
2. Change the frequency of ICLK to f2 MHz.

3. Depending on the desired transition destination frequency (f2 MHz), set the clock division and the memory wait cycle as needed. For details, see section 8.2.2. SCKDIVCR : System Clock Division Control Register and section 8.2.4. MEMWAIT : Memory Wait Cycle Control Register for Code Flash.
4. (Operation in High-speed mode with f2 MHz and LDOCR.CHG0 = 1)

10.5.4 Specific Procedure for Low Power Mode Transition

For low power mode transition between normal mode with f3 MHz and Software Standby or Snooze mode, the following procedures are required.

Note: For the transition between normal mode except with f3 MHz and Software Standby and Snooze mode, the following special procedures are not required.

(3-1) Procedure of transition to Software Standby mode from the normal mode with f3 MHz

1. (Operation begins in High-speed mode with f3 MHz and LDOCR.CHG0 = 1)
2. Change SCKDIVCR.ICLK[2:0] to 001b from 000b.
   (Change the frequency of ICLK to half of f3 MHz from f3 MHz.)
   (It is prohibited to transition to Software Standby mode from the operation with f3 MHz.)
3. For the half of f3 MHz as ICLK frequency, set the clock division except for ICLK and the memory wait cycle as needed. For details, see section 8.2.2. SCKDIVCR : System Clock Division Control Register and section 8.2.4. MEMWAIT : Memory Wait Cycle Control Register for Code Flash of section 8, Clock Generation Circuit.
4. Transition to Software Standby mode.
   (State in Software Standby mode.)

   Note: MOCOCR.MCSTP must be set to 0 before transitioning to Software Standby mode when using Snooze mode at LDOCR.CHG0 = 1.

(3-2) Procedure of transition to normal mode with f3 MHz from Software Standby mode or Snooze mode (continuation of (3-1))

1. (State begins in Software Standby mode or Snooze mode)
2. Occurrence of canceling factor
   (Transition is automatically executed to normal mode with half of f3 MHz and LDOCR.CHG0 = 1.)
3. Depending on the frequency (f3 MHz) of the target transition destination, set the clock division except for ICLK and the memory wait cycle as needed after the CPU starts to operate. For details, see section 8.2.2. SCKDIVCR : System Clock Division Control Register and section 8.2.4. MEMWAIT : Memory Wait Cycle Control Register for Code Flash of section 8, Clock Generation Circuit.
4. Wait more than 30 µs for the stabilization of LDO.
5. Set SCKDIVCR.ICLK[2:0] to 000b.
   (Operation in High-speed mode with f3 MHz and LDOCR.CHG0 = 1.)

10.6 Sleep Mode

10.6.1 Transitioning to Sleep Mode

When a WFI instruction is executed while SBYCR.SSBY bit is 0, the MCU enters Sleep mode. In this mode, the CPU stops operating but the contents of its internal registers are retained. Other peripheral functions do not stop. Available resets or interrupts in Sleep mode cause the MCU to cancel Sleep mode. All interrupt sources are available. If using an interrupt to cancel Sleep mode, you must set the associated IELSRn register before executing a WFI instruction. For details, see section 12, Interrupt Controller Unit (ICU).

Counting by IWDT stops when the MCU enters Sleep mode while the IWDT is in auto start mode and the OFS0.IWDTSTPCTL bit is 1 (IWDT stops in Sleep mode, Software Standby mode, or Snooze mode).

Counting by IWDT continues when the MCU enters Sleep mode while the IWDT is in auto start mode and the OFS0.IWDTSTPCTL bit is 0 (IWDT does not stop in Sleep mode, Software Standby mode, or Snooze mode).

Counting by WDT stops when the MCU enters Sleep mode while the WDT is in auto start mode and the OFS0.WDTSTPCTL bit is 1 (WDT stops in Sleep mode). Similarly, counting by WDT stops when the MCU enters Sleep mode while the WDT is in register start mode and the WDTCSTPR.SLCSTP bit is 1 (WDT stops in Sleep mode).

Counting by WDT continues when the MCU enters Sleep mode while the WDT is in auto start mode and the OFS0.WDTSTPCTL bit is 0 (WDT does not stop in Sleep mode). Similarly, counting by WDT continues when the MCU enters Sleep mode while the WDT is in register start mode and the WDTCSTPR.SLCSTP bit is 0 (WDT does not stop in Sleep mode).

10.6.2 Canceling Sleep Mode

Sleep mode is canceled by:

- An interrupt
- A RES pin reset
- A power-on reset
- A voltage monitor reset
- An SRAM parity error reset
- An SRAM ECC error reset
- A bus master MPU error reset
- A TrustZone error reset
- A reset caused by an IWDT or a WDT underflow

The operations are as follows:

1. Canceling by an interrupt
   When an interrupt request is generated, Sleep mode is canceled and the MCU starts the interrupt handling.
2. Canceling by RES pin reset
   When the RES pin is driven low, the MCU enters the reset state. Be sure to keep the RES pin low for the time period specified in section 43, Electrical Characteristics. When the RES pin is driven high after the specified time period, the CPU starts the reset exception handling.
3. Canceling by IWDT reset
   Sleep mode is canceled by an internal reset generated by an IWDT underflow and the MCU starts the reset exception handling. However, IWDT stops in Sleep mode and an internal reset for canceling Sleep mode is not generated in the following conditions:
   - OFS0.IWDTSTRT = 0 and OFS0.IWDTSTPCTL = 1.
4. Canceling by WDT reset
   Sleep mode is canceled by an internal reset generated by a WDT underflow and the MCU starts the reset exception handling. However, WDT stops in Sleep mode even when counting in Normal mode and an internal reset for canceling Sleep mode is not generated in the following conditions:
   - OFS0.WDTSTRT = 0 (auto start mode) and OFS0.WDTSTPCTL = 1
   - OFS0.WDTSTRT = 1 (register start mode) and WDTCSTPR.SLCSTP = 1.
5. Canceling by other resets available in Sleep mode
   Sleep mode is canceled by other resets and the MCU starts the reset exception handling.

Note: For details on proper setting of the interrupts, see section 12, Interrupt Controller Unit (ICU).

10.7 Software Standby Mode

10.7.1 Transitioning to Software Standby Mode

When a WFI instruction is executed while SBYCR.SSBY bit is 1, the MCU enters Software Standby mode. In this mode, the CPU, most of the on-chip peripheral functions and the oscillators stop. However, the contents of the CPU internal registers and SRAM data, the states of on-chip peripheral functions and the I/O ports are retained[*1]. Software Standby mode allows significant reduction in power consumption because most of the oscillators stops in this mode. Table 10.2 shows the

status of each on-chip peripheral functions and oscillators. Available resets or interrupts in Software Standby mode make the MCU to cancel Software Standby mode. See Table 10.3 for available interrupt sources and section 12.2.18. WUPEN0 : Wake Up Interrupt Enable Register 0, section 12.2.19. WUPEN1 : Wake Up Interrupt Enable Register 1, section 12.2.20. WUPEN2 : Wake Up Interrupt Enable Register 2 for information on waking up the MCU from Software Standby mode. If using an interrupt to cancel an interrupt, you must set the associated IELSRn register before executing a WFI instruction. For details, see section 12, Interrupt Controller Unit (ICU).

Clear DMAST.DMST bit and DTCST.DTCST bit to 0 before executing WFI instruction except when using DTC in Snooze mode. If DTC is required in Snooze mode, set DTCST.DTCST bit to 1 before executing a WFI instruction.

Counting by the IWDT stops if the MCU enters Software Standby mode while the IWDT is in auto start mode and the OFS0.IWDTSTPCTL bit is 1 (IWDT stops in Sleep, Software Standby or Snooze mode).

Counting by the IWDT continues if the MCU enters Software Standby mode while the IWDT is in auto start mode and the OFS0.IWDTSTPCTL bit is 0 (IWDT does not stop in Sleep, Software Standby or Snooze mode).

WDT stops counting when the MCU enters Software Standby mode because the PCLKB stops.

Do not enter Software Standby mode while OSTDCR.OSTDE = 1 (oscillation stop detection function is enabled). To enter Software Standby mode, execute a WFI instruction after disabling the oscillation stop detection function (OSTDCR.OSTDE = 0). In case of executing WFI instruction while OSTDCR.OSTDE = 1, the MCU enters Sleep mode even if SBYCR.SSBY = 1.

Do not enter Software Standby mode while the flash memory is programming or erasing. To enter Software Standby mode, execute a WFI instruction after programming or erasing procedure completes.

Note 1. The retention of RAM area can be controlled by the PSMCR register.

Table 10.7 shows the setting of the related control bits and the modes to enter after executing WFI instruction.

Table 10.7 Bit settings that affect modes when executing a WFI instruction

		SBYCR.SSBY bit settings	
		SSBY = 0	SSBY = 1
OSTDCR.OSTDE	0	Sleep	Software Standby
	1		Sleep
FENTRYR.FENTRYC FENTRYR.FENTRYD	0	Sleep	Software Standby
	1		Sleep
OFS0.IWDTSTPCTL	0	Sleep	Software Standby
	1		
LVD1CR0.RI	0	Sleep	Software Standby
	1		
LVD2CR0.RI	0	Sleep	Software Standby
	1		

10.7.2 Canceling Software Standby Mode

Software Standby mode is canceled by:

- An available interrupt shown in Table 10.3
- A RES pin reset
- A power-on reset
- A voltage monitor reset
- A reset caused by an IWDT underflow.

On exiting Software Standby mode, the oscillators that operate before the transition to the mode restart. After all the oscillators are stabilized, the MCU returns to Normal mode from Software Standby mode. See section 12.2.18. WUPEN0 : Wake Up Interrupt Enable Register 0, section 12.2.19. WUPEN1 : Wake Up Interrupt Enable Register 1, section 12.2.20. WUPEN2 : Wake Up Interrupt Enable Register 2 for information on how to wake up the MCU from Software Standby mode.

You can cancel Software Standby mode in any of the following ways:

1. Canceling by an interrupt
   When an available interrupt request (see Table 10.3) is generated, an oscillator that operates before the transition to Software Standby mode restarts. After all the oscillators are stabilized, the MCU returns to Normal mode from Software Standby mode and starts the interrupt handling.
2. Canceling by a RES pin reset
   When the RES pin is driven low, the MCU enters the reset state, and the oscillators whose default status is operating, start the oscillation. Be sure to keep the RES pin low for the time period specified in section 43, Electrical Characteristics. When the RES pin is driven high after the specified time period, the CPU starts the reset exception handling.
3. Canceling by a power-on reset
   Software Standby mode is canceled by a power-on reset and the MCU starts the reset exception handling.
4. Canceling by a voltage monitor reset
   Software Standby mode is canceled by a voltage monitor reset from the voltage detection circuit and the MCU starts the reset exception handling.
5. Canceling by IWDT reset
   Software Standby mode is canceled by an internal reset generated by an IWDT underflow and the MCU starts the reset exception handling. However, IWDT stops in Software Standby mode and an internal reset for canceling Software Standby mode is not generated in the following condition:
   - OFS0.IWDTSTRT = 0 and OFS0.IWDTSTPCTL = 1.

10.7.3 Example of Software Standby Mode Application

Figure 10.6 shows an example of entry to Software Standby mode on detection of a falling edge of the IRQn pin, and exit from Software Standby mode by a rising edge of the IRQn pin.

In this example, an IRQn pin interrupt is accepted with the IRQCRi.IRQMD[1:0] bits of the ICU set to 00b (falling edge) in Normal mode, and the IRQCRi.IRQMD[1:0] bits are set to 01b (rising edge). After that, the SBYCR.SSBY bit is set to 1 and a WFI instruction is executed. As a result, entry to Software Standby mode completes and exit from Software Standby mode is initiated by a rising edge of the IRQn pin.

Setting the ICU is also required to exit Software Standby mode. For details, see section 12, Interrupt Controller Unit (ICU). The oscillation stabilization time in Figure 10.6 is specified in section 43, Electrical Characteristics.

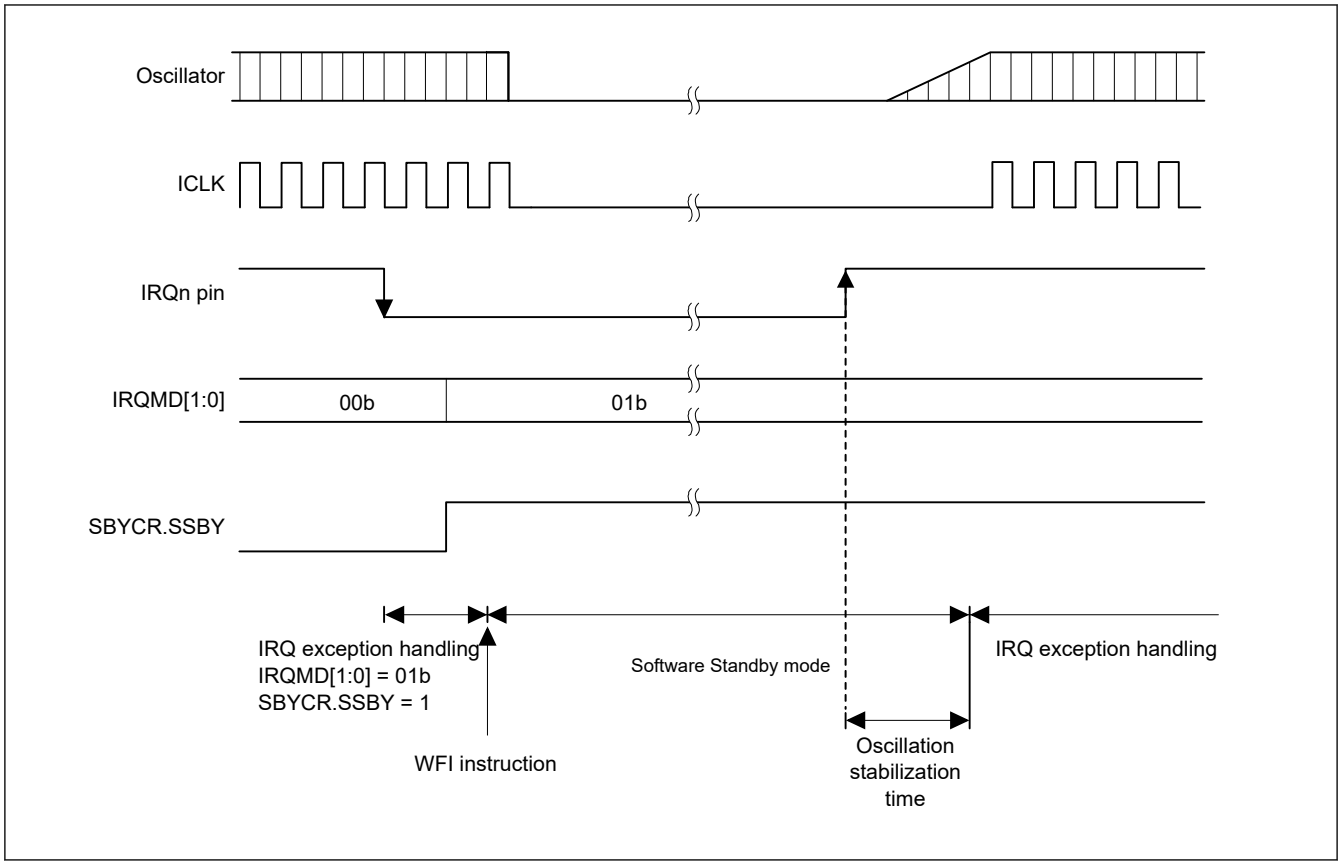

Figure 10.6 Example of Software Standby mode application

10.8 Snooze Mode

10.8.1 Transition to Snooze Mode

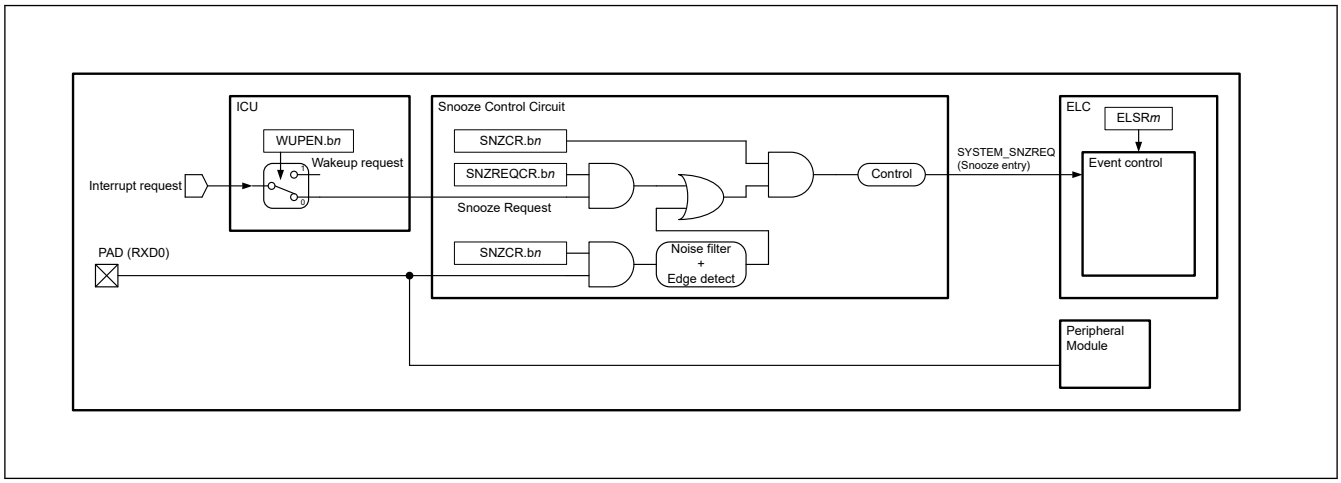

Figure 10.7 Snooze mode entry configuration

When the snooze control circuit accepts an available snooze request in Software Standby mode, the MCU transfers to Snooze mode. In this mode, some peripheral modules operates without waking the CPU. The peripheral modules that can operate in Snooze mode are shown in Table 10.2. Also, DTC operation in Snooze mode can be selected by the setting of SNZCR.SNZDTCEN bit.

Table 10.8 shows the Snooze requests that switch the MCU from Software Standby mode to Snooze mode. To use the listed Snooze requests as a trigger to switch to Snooze mode, the corresponding SNZREQENn bit of the SNZREQCR0 register or RXDREQEN bit of SNZCR register must be set before entering Software Standby mode.

Table 10.8 Available snooze requests to switch to Snooze mode

Snooze request	Control Register	
	Register	Bit[*1]
PORT_IRQn (n = 0 to 15)	SNZREQCR0	SNZREQENn (n = 0 to 15)
RTC_ALM	SNZREQCR0	SNZREQEN24
RTC_PRD	SNZREQCR0	SNZREQEN25
AGT1_AGTI	SNZREQCR0	SNZREQEN28
AGT1_AGTCMAI	SNZREQCR0	SNZREQEN29
AGT1_AGTCMBI	SNZREQCR0	SNZREQEN30
RXD0 falling edge	SNZCR	RXDREQEN[*2]

Note 1. Do not enable multiple snooze requests at the same time.
Note 2. Do not set the RXDREQEN bit to 1 except in asynchronous mode.

Clear the DMAST.DMST and DTCST.DTCST bits to 0 before executing a WFI instruction, except when using the DTC in Snooze mode. If the DTC is required in Snooze mode, set the DTCST.DTCST bit to 1 before executing a WFI instruction.

10.8.2 Canceling Snooze Mode

Snooze mode is canceled by an interrupt request that is available in Software Standby mode or a reset. Table 10.3 shows the requests that can be used to exit each mode. After canceling the Snooze mode, the MCU enters Normal mode and proceeds with exception processing for the given interrupt or reset. The action triggered by the interrupt requests, selected in SELSR0, cancels Snooze mode. Interrupt canceling Snooze mode must be selected in IELSRn to link to the NVIC for the corresponding interrupt handling. See section 12, Interrupt Controller Unit (ICU) for information on SELSR0 and IELSRn registers.

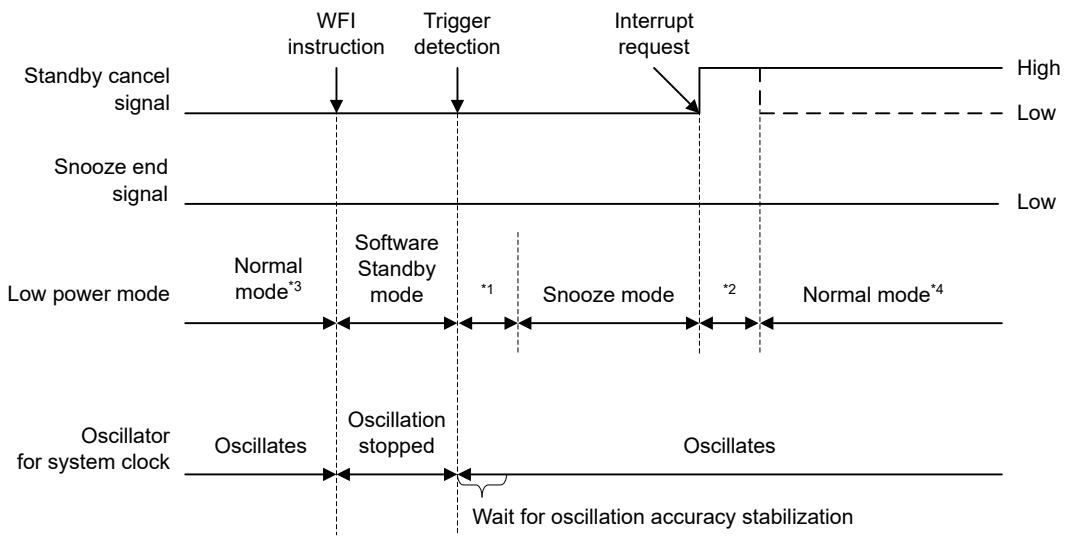

Note 1. Transition time from Software Standby mode to Snooze mode.
Note 2. Transition time from Snooze mode to Normal mode.
Note 3. Enable Snooze mode (SNZCR.SNZE = 1) immediately before switching to Software Standby mode.
Note 4. Disable Snooze mode (SNZCR.SNZE = 0) immediately after returning to Normal mode.

Figure 10.8 Canceling of Snooze mode when an interrupt request signal is generated

10.8.3 Returning to Software Standby Mode from Snooze Mode

Table 10.9 shows the snooze end request that can be used as triggers to return to Software Standby mode. The snooze end requests are available only in Snooze mode. If the requests are generated when the MCU is not in Snooze mode, they

are ignored. When multiple requests are selected, each of the requests invokes transition to Software Standby mode from Snooze mode.

Table 10.10 shows the snooze end conditions that consist of the snooze end requests and the conditions of the peripheral modules. The SCI0, ADC12, and DTC modules can keep the MCU in Snooze mode until they complete the operation. However, an AGT1 underflow as a trigger to return to Software Standby mode cancels Snooze mode without waiting for the completion of SCI0 operation.

Figure 10.9 shows the timing diagram for the transition from Snooze mode to Software Standby mode. This mode transition occurs according to which snooze end requests are set in the SNZEDCR0 register. A snooze request is cleared automatically after returning to Software Standby mode.

Table 10.9 Available snooze end requests (triggers to return to Software Standby mode)

Peripheral module	Snooze end request	Enable/Disable control	
		Register	Symbol
AGT1	AGT1 underflow (AGT1_AGTI)	SNZEDCR0	AGTUNFED
DTC	Last DTC transmission completion (DTC_COMPLETE)	SNZEDCR0	DTCZRED
DTC	Not Last DTC Transmission Completion (DTC_TRANSFER)	SNZEDCR0	DTCNZRED
ADC120	Window A/B compare match (ADC120_WCMPM)	SNZEDCR0	AD0MATED
ADC120	Window A/B compare mismatch (ADC120_WCMPUM)	SNZEDCR0	AD0UMTED
SCI0	SCI0 address mismatch (SCI0_DCUF)	SNZEDCR0	SCI0UMTED

Table 10.10 Snooze end conditions

Operating module when a snooze end request occurs	Snooze end request	
	AGT1 underflow	Other than AGT1 underflow
DTC	The MCU transfers to the Software Standby mode after all of the modules listed in this table complete operation.	The MCU transfers to the Software Standby mode after all of the modules listed to the left of this column complete the operation.
ADC120		
SCI0	The MCU transfers to the Software Standby mode immediately after the snooze end request is generated.	
Other than specified	The MCU transfers to the Software Standby mode immediately after a snooze end request is generated.	

Note: If the DTC is used to activate the ADC120 or SCI, the MCU transitions to Software Standby mode immediately after a snooze end request is generated.

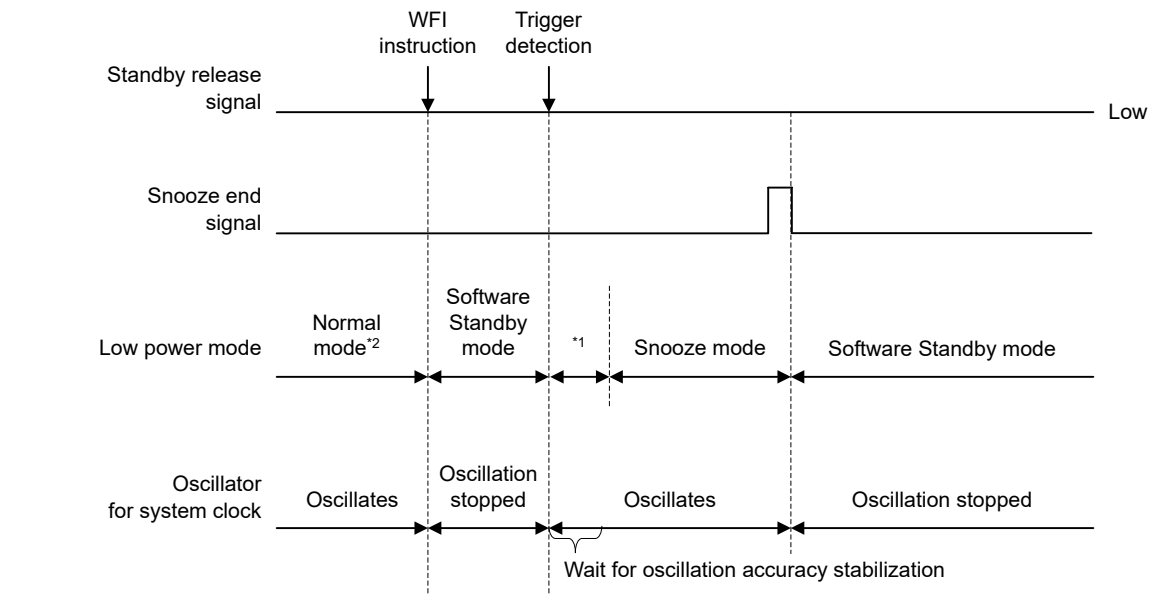

Note 1. Transition time from Software Standby mode to Snooze mode.
Note 2. Enable Snooze mode (SNZCR.SNZE = 1) immediately before switching to Software Standby mode.

Figure 10.9 Canceling of Snooze mode when an interrupt request signal is not generated

10.8.4 Snooze Operation Example

Figure 10.10 shows an example setting for using ELC in Snooze mode.

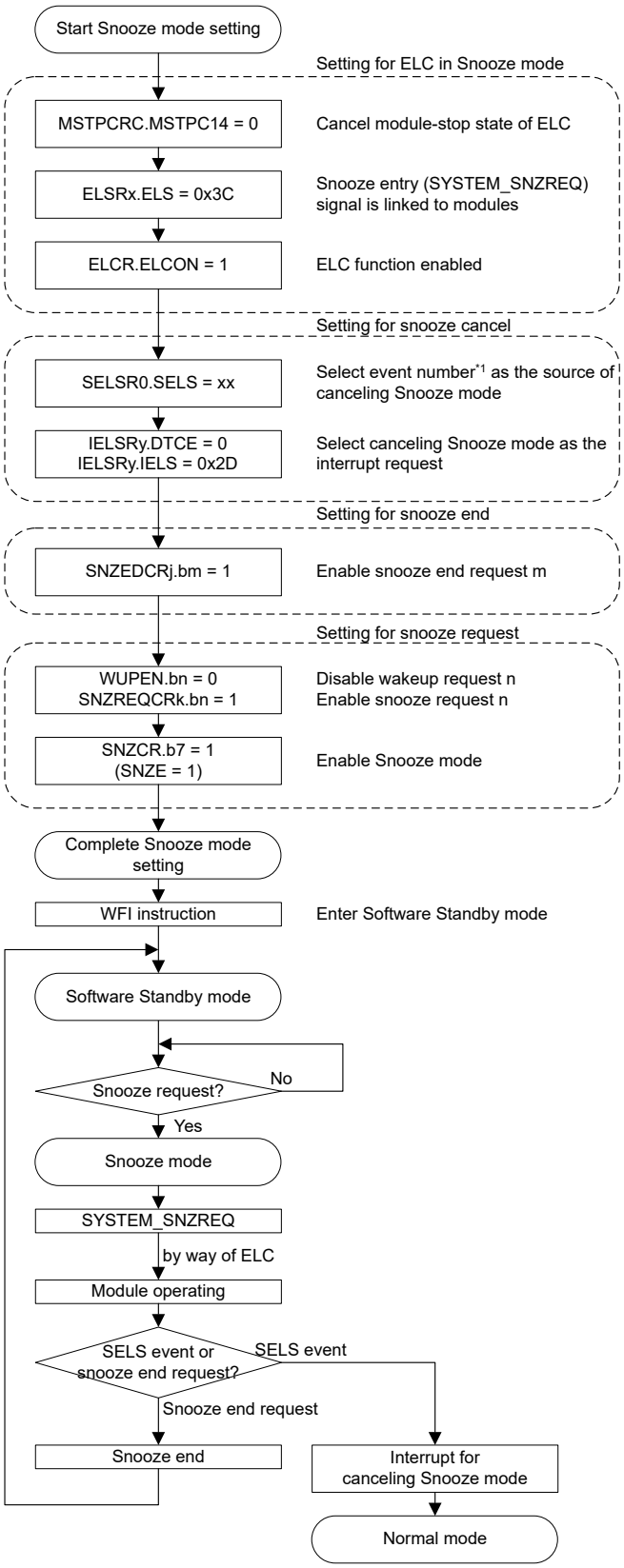

Note 1. See Table 12.4

Figure 10.10 Setting example of using ELC in Snooze mode

The MCU can transmit and receive data in SCI0 asynchronous mode without CPU intervention. When using the SCI0 in Snooze mode, use High-speed mode, Middle-speed mode, or Low-speed mode.

Do not use Subosc-speed mode. Table 10.11 shows the maximum transfer rate of SCI0 in Snooze mode.

Table 10.11 Maximum transfer rate of SCI0 in Snooze mode, HOCO: ± 1 % (Unit: bps)

Maximum division ratio of ICLK, PCLKB, and PCLKD	HOCO frequency			
	24 MHz	32 MHz	48 MHz	64 MHz
1	9600*1	9600*4	—	—
2	9600*2	9600*5	4800	2400
4	9600*3	9600*6	4800	2400
8	4800	4800	4800	2400
16	4800	4800	4800	2400
32	2400	2400	2400	2400
64	2400	2400	2400	2400

Note 1. SCI0.SMR.CKS[1:0] = 00b, SCI0.SEMR.BRME = 1, SCI0.BRR = 0x3D, SCI0.MDDR = 0xCE must be used for 9600 bps.
Note 2. SCI0.SMR.CKS[1:0] = 00b, SCI0.SEMR.BRME = 1, SCI0.BRR = 0x1E, SCI0.MDDR = 0xCE must be used for 9600 bps.
Note 3. SCI0.SMR.CKS[1:0] = 00b, SCI0.SEMR.BRME = 1, SCI0.BRR = 0x0D, SCI0.MDDR = 0xBA must be used for 9600 bps.
Note 4. SCI0.SMR.CKS[1:0] = 00b, SCI0.SEMR.BRME = 1, SCI0.BRR = 0x3E, SCI0.MDDR = 0x9D must be used for 9600 bps.
Note 5. SCI0.SMR.CKS[1:0] = 00b, SCI0.SEMR.BRME = 1, SCI0.BRR = 0x32, SCI0.MDDR = 0xFE must be used for 9600 bps.
Note 6. SCI0.SMR.CKS[1:0] = 00b, SCI0.SEMR.BRME = 1, SCI0.BRR = 0x18, SCI0.MDDR = 0xF9 must be used for 9600 bps.

When using SCI0 in Snooze mode, use the following setting: BGDM = 0, ABCS = 0, ABCSE = 0. See section 25, Serial Communications Interface (SCI) for information on these bits.

Figure 10.11 shows a setting example for using SCI0 in Snooze mode entry.

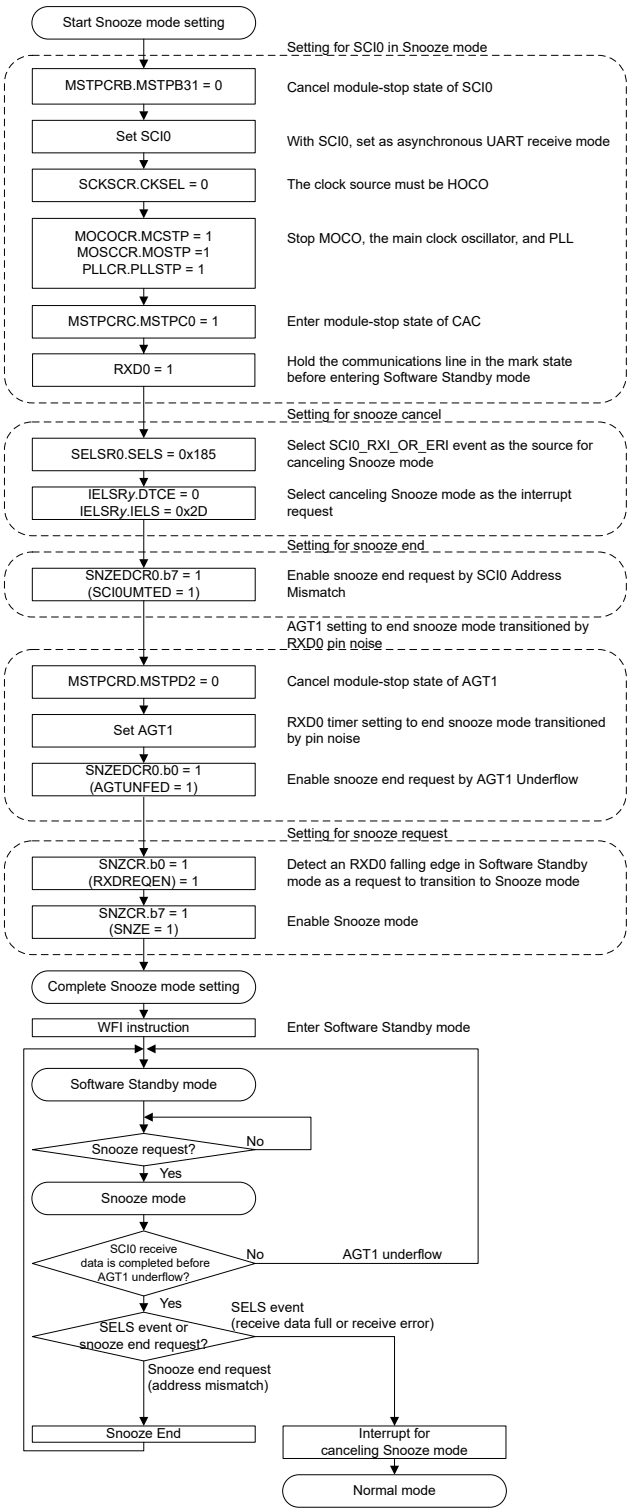

Figure 10.11 Setting example of using SCI0 in Snooze mode entry

10.9 Usage Notes

10.9.1 Register Access

(1) Invalid register write accesses during specific modes or transitions

Do not write to registers under any of the conditions listed in this section.

[Registers]

- All registers with a peripheral name of SYSTEM.

[Conditions]

- OPCCR.OPCMTSF = 1 or SOPCCR.SOPCMTSF = 1 (during transition of the operating power control mode)
- During the time period from executing a WFI instruction to returning to Normal mode
- FENTRYR.FENTRY0 = 1 or FENTRYR.FENTRYD = 1 (flash P/E mode, data flash P/E mode)

(2) Valid setting for the clock-related registers

Table 10.12 and Table 10.13 show the valid settings of the clock-related registers in each operating power control mode. Do not write any value other than the valid setting. Each register has certain prohibited settings under conditions other than those related to the operating power control modes. See section 8, Clock Generation Circuit for another condition of each register.

Table 10.12 Valid settings for the clock-related registers (1)

Mode	Valid settings								
	SCKSCR. CKSEL[2:0] CKOCR. CKOSEL[2:0]	SCKDIVCR. FCK[2:0] ICK[2:0]	PLLCR. PLLSTP	HOCOCR. HCSTP	MOCOCR. MCSTP	LOCOCR. LCSTP	MOSCCR. MOSTP	SOSCCR. SOSTP	PLLRTCCR. PLLRTCSTP
High-speed or Middle-speed	000b (HOCO) 001b (MOCO) 010b (LOCO) 011b (Main clock) 100b (Sub clock) 101b (PLL) *1	000b (1/1) 001b (1/2) 010b (1/4) 011b (1/8) 100b (1/16) 101b (1/32) 110b (1/64)	0 (operating) 1 (stopped)	0 (operating) 1 (stopped)	0 (operating) 1 (stopped)	0 (operating) 1 (stopped)	0 (operating) 1 (stopped)	0 (operating) 1 (stopped)	0 (operating) 1 (stopped)
Low-speed	000b (HOCO) 001b (MOCO) 010b (LOCO) 011b (Main clock) 100b (Sub clock)		1 (stopped)						1 (stopped)
Subosc-speed	010b (LOCO) 100b (SOSC)	000b (1/1)	1 (stopped)	1 (stopped)	1 (stopped)	0 (operating) 1 (stopped)	1 (stopped)	0 (operating) 1 (stopped)	1 (stopped)

Note 1. SCKSCR.CKSEL[2:0] only

Table 10.13 Valid settings for the clock-related registers (2)

Operating oscillator	Valid settings	
	SOPCCR.SOPCM	OPCCR.OPCM[1:0]
PLL	0	00b, 01b
High-speed on-chip oscillator	0	00b, 01b, 11b
Middle-speed on-chip oscillator		
Main clock oscillator		
Low-speed on-chip oscillator	0, 1	00b, 01b, 11b
Sub-clock oscillator		
IWDT-dedicated on-chip oscillator		
PLL_RTC	0	00b, 01b

(3) Invalid register write accesses in subosc-speed mode

Do not write to registers under the listed condition in this section.

[Registers]

- SCKSCR, OPCCR.

[Condition]

- SOPCCR.SOPCM = 1 (Subosc-speed mode).

(4) Invalid register write accesses by the DTC or DMAC

Do not write to registers listed in this section by the DTC or DMAC.

[Registers]

- MSTPCRA, MSTPCRB, MSTPCRC, MSTPCRD, MSTPCRE

(5) Invalid register write accesses in Snooze mode

Do not write to registers listed in this section in Snooze mode. They must be set before entering Software Standby mode.

[Registers]

- SNZCR, SNZEDCR0, SNZREQCR0.

(6) Invalid write access when PRCR.PRC1 is 0

Do not write to registers listed in this section when the PRCR.PRC1 bit is 0.

[Registers]

- SBYCR, SNZCR, SNZEDCR0, SNZREQCR0, PSMCR, SRMPSCR, OPCCR, SOPCCR, SYOCDCR, LDOCR

(7) Invalid write access when PRCR.PRC4 bit is 0

Do not write to registers listed in this section when the PRCR.PRC4 bit is 0.

[Registers]

- LPMSAR

10.9.2 I/O Port Pin States

The I/O port pin states in Software Standby mode and Snooze mode, unless modifying in Snooze mode, are the same before entering the modes. Therefore, power consumption is not reduced while the output signals are held high.

10.9.3 Module-Stop State of DTC, DMAC

Before writing 1 to MSTPCRA.MSTPA22, clear the DMAST.DMST bit of the DMAC and the DTCST.DTCST bit of the DTC to 0. For details, see section 15, DMA Controller (DMAC) and section 16, Data Transfer Controller (DTC).

10.9.4 Internal Interrupt Sources

Interrupts do not operate in the module-stop state. If setting the module-stop bit while an interrupt request is generated, a CPU interrupt source or a DTC or DMAC startup source cannot be cleared. Always disable the associated interrupts before setting the module-stop bits.

10.9.5 Transitioning to Low Power Modes

Because the MCU does not support wakeup by events, do not enter the low power modes such as Sleep mode or Software Standby mode by executing a WFI instruction. Also, do not set the SLEEPDEEP bit of the System Control Register in the Cortex-M33 core because the MCU does not support low power modes by SLEEPDEEP.

10.9.6 Timing of WFI Instruction

It is possible for the WFI instruction to be executed before I/O register write is completed, in which case operation might not be as intended. This can happen if the WFI is placed immediately after a write to an I/O register. To avoid this problem, read back the register that was written to confirm that the write completed.

10.9.7 Writing to the WDT/IWDT Registers by DTC or DMAC in Sleep Mode or Snooze Mode

Do not write to the WDT or IWDT registers by the DTC or DMAC while WDT or IWDT is stopped after entering Sleep mode or Snooze mode.

10.9.8 Oscillators in Snooze Mode

Oscillators that stop on entering Software Standby mode automatically restart when a trigger for switching to Snooze mode is generated. The MCU does not enter Snooze mode until all the oscillators stabilize. If in Snooze mode, you must disable oscillators that are not required in Snooze mode before entering Software Standby mode. Otherwise, the transition from Software Standby mode to Snooze mode takes longer.

10.9.9 Snooze Mode Entry by RXD0 Falling Edge

When the SNZCR.RXDREQEN bit is 1, the falling edge of RXD0 pin is used to switch MCU from Software Standby mode to Snooze mode when using UART of SCI0 in Snooze mode. In this case an interrupt such as SCI0_ERI, SCI0_RXI or an address mismatch event is used as the source for canceling Snooze mode. However, noise on the RXD0 pin might cause the MCU to transfer from Software Standby mode to Snooze mode unexpectedly. In this case if the MCU does not receive RXD0 data after the noise, an interrupt such as SCI0_ERI or SCI0_RXI, or an address mismatch event is not generated and the MCU stays in Snooze mode. This can be avoided by using AGT1 underflow interrupt to return to Software Standby mode or Normal mode unless otherwise UART receive data is completed before AGT1 underflow. However, do not use the AGT1 underflow as a source to return to Software Standby mode during an UART communication. This causes the UART to stop the operation in a half-finished state.

10.9.10 Using UART of SCI0 in Snooze Mode

When using UART in Snooze mode, ensure that the snooze request (RXD0 falling edge) does not conflict with the wakeup requests set by the WUPEN register, otherwise UART cannot be guaranteed.

When using UART in Snooze mode, the following conditions must be satisfied:

- The clock source must be HOCO
- MOCO, PLL, and the main clock oscillator must be stopped before entering Software Standby mode
- The RXD0 pin must be kept high before entering Software Standby mode
- A transition to Software Standby mode must not occur during an SCI0 communication
- The MSTPCRC.MSTPC0 bit must be 1 before entering Software Standby mode.

10.9.11 Conditions of A/D Conversion Start in Snooze Mode

ADC120 can only be triggered by the ELC in Snooze mode. Do not use software trigger or ADTRGn (n = 0, 1) pin.

10.9.12 ELC Events in Snooze Mode

This section lists available ELC events in Snooze mode. Do not use any other events. If starting peripheral modules for the first time after entering Snooze mode, the Event Link Setting Register (ELSRn) must set a Snooze mode entry event (SYSTEM_SNZREQ) as the trigger.

- Snooze mode entry (SYSTEM_SNZREQ)
- DTC transfer end (DTC_DTCEND)
- ADC120 window A/B compare match (ADC120_WCMPM)
- ADC120 window A/B compare mismatch (ADC120_WCMPUM)
- Data operation circuit interrupt (DOC_DOPCI).

10.9.13 Module-Stop Function of A/D Converter

When entering Software Standby mode, it is recommended that you set the ADC120 module-stop state to reduce power consumption. In this case, the ADC120 is available in Snooze mode by releasing the ADC120 module-stop using the DTC. Similarly, set the module-stop state using the DTC before returning to Software Standby mode from Snooze mode.

10.9.14 Module-Stop Bit Write Timing

It is possible that access to I/O register may be executed before the corresponding module-stop bit write completed. In this case, access to I/O register may not proceed as intended. To avoid this issue, before accessing I/O register, read back the module-stop bit that was written to confirm that the write completed.

10.9.15 Sleep-on-exit Function

There are 2 ways to transition to low power modes. One is WFI instruction and the other is Sleep-on-exit. When Sleep-on-exit is used for transition to low power modes, WFI instruction comments written in User's Manual Hardware is applicable to Sleep-on-exit.

10.9.16 Interruption During the Transition to Low Power Modes

If the software meets the applicable condition listed in section 10.9.16.1. Applicable Condition and Notes, you may not be able to enter the intended low power mode and transit to unintended states described in section 10.9.16.1. Applicable Condition and Notes.

If the unintended states described in section 10.9.16.1. Applicable Condition and Notes notes cannot be tolerated, refer to section 10.9.16.2. Workaround.

10.9.16.1 Applicable Condition and Notes

(1) Applicable Condition

Transition to Software Standby mode is started by a trigger (WFI instruction or SLEEPONEXIT) with SBYCR.SSBY = 1 set to use Software Standby mode or Snooze mode.

During the specified interval (ICLK 2 cycle) of transitioning to Software Standby mode, one of the following interrupt requests that is not an interrupt source to return from Software Standby mode is accepted by CPU.

1. SysTick interrupt (all of the following are applicable)
   - Exception number 15 of Interrupt vector table
   - Interrupt requests are not masked by Base Priority Mask Register (BASEPRI)
     (BASEPARI = 0 or BASEPRI > SHPR3.PRI_15)
2. Maskable interrupt requests that are not interrupt source to return from Software Standby mode (all of the following are applicable)
   - By WUPEN in exception numbers 16 to 79 in the interrupt vector table those not permitted to return from Software Standby mode
   - Interrupt requests are enabled by Interrupt Set-Enable Register (NVIC_ISERn)
   - Interrupt requests are not masked by Base Priority Mask Register (BASEPRI)
     (BASEPARI = 0 or BASEPRI > NVIC_IPRn.PRI_N)
3. Non-maskable interrupt request triggered by the following sources

   SRAM parity error

   SRAM ECC error

   Bus master MPU error

   TrustZone filtering error

(2) Notes

If the above conditions are met, the MCU will transit to following unintended states. These unintended states can be resolved by a reset or returning to Normal mode with an interrupt request of an interrupt source to return from Software Standby mode.

1. When transitioning to Software Standby mode (SBYCR.SSBY = 1, SNZCR.SNZE = 0)
   Only CPU clock is stopped, and the remaining clocks continue to operate as they were prior to transitioning Software Standby mode.
   - As before the transition to Software Standby mode is started, depending on the setting, timer or other peripherals continue to operate, and an interrupt request related to the peripheral is generated.
   - Because the IWDT and WDT clock-stop function is disabled, a reset or an interrupt for the IWDT and WDT is generated depending on the settings before starting the transition to Software Standby mode.
   - Interrupt requests are held in IR flag (IELSRn, DELSRn).
2. When transitioning to Snooze mode (SBYCR.SSBY = 1, SNZCR.SNZE = 1)
   The transition to Snooze mode is not possible, and the states shown in “1) When transitioning to Software Standby mode” is continued.
   To return to Normal mode by an interrupt source (SELSR0) from Snooze mode depends on whether the interrupt request (SELSR0) to returning from Snooze mode can be generated while DTC operation is disabled.
   If DTC operation is disabled (SNZCR.SNZDTCEN = 0) in Snooze mode, Normal mode can be returned because an interrupt source for the interrupt source (SELSR0) to return from Snooze mode can be generated.
   If DTC operation is enabled (SNZCR.SNZDTCEN = 1) in Snooze mode, the Normal mode cannot be returned because an interrupt request for the interrupt source (SELSR0) to return from Snooze mode cannot be generated.

10.9.16.2 Workaround

(1) Workaround

To avoid the unintended states described above, apply the following before the terms for transition to Software Standby mode or Snooze mode are met: (For the setting procedure, see "Setting Procedure for Transition to Software Standby or Snooze Mode")

1. Disable SysTick interrupt requests.
   Exception number 15 of Interrupt vector table
2. Disable maskable interrupt requests that are not interrupt sources to return from Software Standby mode.
   Exception number 16 to 79 of Interrupt vector table that WUPEN does not allow to return from Software Standby mode.
3. Stop access from the bus master other than the CPU so that the non-maskable interrupt is not triggered by the following sources.

   SRAM parity error

   SRAM ECC error

   Bus master MPU error

   TrustZone filtering error

(2) Setting Procedure for Transition to Software Standby Mode or Snooze Mode

This section describes procedures for avoiding unintended states.

The handling of interrupt requests after returning from Software Standby mode or Snooze mode varies depending on the method used to disable the maskable interrupt request. Either one or the other should be applied.

- Procedure A: Disable maskable interrupt request acceptance.
  Any interrupt request that occurs while interrupt request acceptance is disabled is discarded.

Table 10.14 Before transitioning to Software Standby mode or Snooze mode (1 of 2)

Step	Description
1	Stop the bus access from the bus master other than CPU.*1

Table 10.14 Before transitioning to Software Standby mode or Snooze mode (2 of 2)

Step	Description
2	Disable the SysTick interrupt request.*2
3	Clear IELSRn in ICU to disable acceptance of maskable interrupt requests that are not interrupt sources to return from Software Standby mode.
4	Read IELSRn in ICU to confirm that IELSRn in ICU has been cleared.
5	Transition to Software Standby mode (WFI instruction, SLEEPONEXIT).

Note 1. SRAM parity error interrupt, SRAM ECC error interrupt, MPU bus master error interrupt, MPU bus slave error interrupt, or TrustZone filter error interrupt is enabled as a non-maskable interrupt.
Note 2. Disabling a SysTick interrupt request may cause SysTick interrupt request to be delayed by one cycle of SysTick timer without generating the latest SysTick interrupt request.

Table 10.15 After returning from Software Standby mode or Snooze mode

Step	Description
1	Enable the SysTick interrupt request.
2	Set IELSRn in ICU to enable acceptance of maskable interrupt requests that are not interrupt sources to return from Software Standby mode.
3	Enable bus access from bus masters other than CPU.

- Procedure B: Disable the maskable interrupt request
  The interrupt request generated while the interrupt request is disabled is retained in IELSRn.IR flag. Therefore, after returning from Software Standby mode or Snooze mode and enabling the maskable interrupt, it is possible to process the interrupt.

Table 10.16 Before transitioning to Software Standby mode or Snooze mode

Step	Description
1	Stop the bus access from the bus master other than CPU.*1
2	Disable the SysTick interrupt request.*2
3	Write 1 to the corresponding bit in NVIC_ICERn in CPU to disable maskable interrupt requests that are not interrupt sources to return from Software Standby mode.
4	Execute Data Synchronization Barrier (DSB) instruction.
5	Transition Software Standby mode (WFI instruction, SLEEPONEXIT)

Note 1. SRAM parity error interrupt, SRAM ECC error interrupt, MPU bus master error interrupt, MPU bus slave error interrupt, or TrustZone filter error interrupt is enabled as a non-maskable interrupt.
Note 2. Disabling a SysTick interrupt request may cause SysTick interrupt request to be delayed by one cycle of SysTick timer without generating the latest SysTick interrupt request.

Table 10.17 After returning from Software Standby mode or Snooze mode

Step	Description
1	Enable the SysTick interrupt request.
2	Write 1 to the corresponding bit in NVIC_ISERn in CPU to enable maskable interrupt requests that are not interrupt sources to return from Software Standby mode.
3	Enable bus access from bus masters other than CPU.

11. Register Write Protection

11.1 Overview

The register write protection function protects important registers from being overwritten due to software errors. The registers to be protected are set with the Protect Register (PRCR).

Table 11.1 lists the association between the bits in the PRCR register and the registers to be protected.

Table 11.1 Association between the bits in the PRCR register and registers to be protected

PRCR bit	Register to be protected
PRC0	• Registers related to the clock generation circuit: SCKDIVCR, SCKSCR, MEMWAIT, PLLCCR, PLLCR, PLLRTCCCR, PLLRTCCR, MOSCCR, HOCOCR, HOCOCR2, MOCOCR, SOMRG, SLCDSCKCR, CKOCR, OSTDCR, OSTDSR, SOSTDCR, MOCOUTCR, HOCOUTCR, CANFDCKDIVCR, CANFDCKCR, MOSCWTCR, MOMCR, SOSCCR, SOMCR, LOCOCR, LOCOUTCR
PRC1	• Registers related to the low power modes: SBYCR, SNZCR, SNZEDCR0, PSMCR, SRMPSCR, SNZREQCR0, OPCCR, SOPCCR, SYOCDCR, LDOCR, FLSTOP
PRC3	• Registers related to the LVD: LVD1CR1, LVD1SR, LVD2CR1, LVD2SR, LVD1CMPCR, LVD2CMPCR, LVD1CR0, LVD2CR0, VBTLVDCR, VRTLVDCR, EXLVDCR, VBTLVDSR, VRTSR, EXLVDSR, VBTCMPCR, VRTCMPCR, EXLVDCMPCR, VBTLVDICR, VRTLVDICR, EXLVDICR
PRC4	• Registers related to the security function: CPUDSAR, RSTSAR, LVDSAR, CGFSAR, LPMSAR, ICUSARx (x = A to H, M), BUSSARx (x = A, B), MMPUSARx (x = A, B), DMACSAR, DTCSAR, ELCSARx (x = A to C), PmSAR (m = 0 to 8), PSAR, SRAMSAR, FSAR, PSARx (x = B to E), MSSAR, TZFSAR

11.2 Register Descriptions

11.2.1 PRCR : Protect Register

Base address: SYSC = 0x4001_E000

Offset address: 0x3FE

Bit position:	15	14	13	12	11	10	9	8	7	6	5	4	3	2	1	0
Bit field:	PRKEY[7:0]								—	—	—	PRC4	PRC3	—	PRC1	PRC0
Value after reset:	0	0	0	0	0	0	0	0	0	0	0	0	0	0	0	0

Bit	Symbol	Function	R/W
0	PRC0	Enable writing to the registers related to the clock generation circuit 0: Disable writes 1: Enable writes	R/W
1	PRC1	Enable writing to the registers related to the low power modes 0: Disable writes 1: Enable writes	R/W
2	—	This bit is read as 0. The write value should be 0.	R/W
3	PRC3	Enable writing to the registers related to the LVD 0: Disable writes 1: Enable writes	R/W
4	PRC4	Enables writing to the registers related to the security function 0: Disable writes 1: Enable writes	R/W
7:5	—	These bits are read as 0. The write value should be 0.	R/W
15:8	PRKEY[7:0]	PRC Key Code These bits control the write access to the PRCR register. To modify the PRCR register, write 0xA5 to the upper 8 bits and the target value to the lower 8 bits as a 16-bit unit.	W

PRCn bits (Protect bit n) (n = 0, 1, 3, 4)

The PRCn bits enable or disable writing to the protected registers listed in Table 11.1. Setting the PRCn bits to 1 or 0 enables or disables writing, respectively.

The register controlled by PRC4 may not reflect the PRC4 change when PRCR and its controlled registers are continuously written access. Avoid continuous write access or read the PRCR after PRC4 change, and then write access the PRC4-controlled register.

12. Interrupt Controller Unit (ICU)

12.1 Overview

The Interrupt Controller Unit (ICU) controls which event signals are linked to the Nested Vector Interrupt Controller (NVIC), the DMA Controller (DMAC), and the Data Transfer Controller (DTC) modules. The ICU also controls non-maskable interrupts.

Table 12.1 lists the ICU specifications, Figure 12.1 shows a block diagram, and Table 12.2 lists the I/O pins.

Table 12.1 ICU specifications

Item		Description
Maskable interrupts	Peripheral function interrupts	• Interrupts from peripheral modules Number of sources: 192 (select factor within event list numbers 32 to 511)
	External pin interrupts	• Interrupt detection on low level*4, falling edge, rising edge, rising and falling edges. One of these detection methods can be set for each source • Digital filter function supported • 16 sources, with interrupts from IRQi (i = 0 to 15) pins.
	Interrupt requests to CPU (NVIC)	• 64 interrupt requests are output to NVIC.
	DMAC control	• The DMAC can be activated using interrupt sources*1 • The target interrupt source can be selected individually for every DMAC channels.
	DTC control	• The DTC can be activated using interrupt sources*1 • The method for selecting an interrupt source is the same as that of the interrupt request to NVIC.
Non-maskable interrupts*2	NMI pin interrupt	• Interrupt from the NMI pin • Interrupt detection on falling edge or rising edge • Digital filter function supported
	WDT underflow/refresh error*3	Interrupt on an underflow of the down-counter or occurrence of a refresh error
	IWDT underflow/refresh error*3	Interrupt on an underflow of the down-counter or occurrence of a refresh error
	Low voltage detection 1*3	Voltage monitor 1 interrupt of the voltage monitor 1 circuit (LVD_LVD1)
	Low voltage detection 2*3	Voltage monitor 2 interrupt of the voltage monitor 2 circuit (LVD_LVD2)
	RPEST*5	Interrupt on SRAM parity error
	RECCST*5	Interrupt on SRAM ECC error
	TZFST*5	Interrupt on TrustZone Filter error
	Oscillation stop detection interrupt*3	Interrupt on detecting that the main oscillation has stopped
	Bus master MPU error*5	Interrupt on bus master MPU error
	CPEST*5	Cache RAM parity error
Low power modes		• Sleep mode: return is initiated by non-maskable interrupts or any other interrupt source • Software Standby mode: return is initiated by non-maskable interrupts. Interrupt can be selected in the WUPEN register. • Snooze mode: return is initiated by non-maskable interrupts. Interrupt can be selected in the SELSR0 and WUPEN registers. See section 12.2.17. SELSR0 : SYS Event Link Setting Register and section 12.2.18. WUPEN0 : Wake Up Interrupt Enable Register 0, section 12.2.19. WUPEN1 : Wake Up Interrupt Enable Register 1, section 12.2.20. WUPEN2 : Wake Up Interrupt Enable Register 2.
TrustZone Filter		Available

Note 1. For the DMAC and DTC activation sources, see Table 12.4.
Note 2. Non-maskable interrupts can be enabled only once after a reset release.
Note 3. These non-maskable interrupts can also be used as maskable interrupts. When used as maskable interrupts, do not change the value of the NMIER register from the reset state. To enable voltage monitor 1 and voltage monitor 2 interrupts, set the LVD1CR1.IRQSEL and LVD2CR1.IRQSEL bits to 1.
Note 4. Low level: interrupt detection is not canceled if you do not clear it after a detection.

Note 5. These non-maskable interrupt sources cannot be recovered if the request source clock is stopped during low power mode.

Figure 12.1 shows the ICU block diagram.

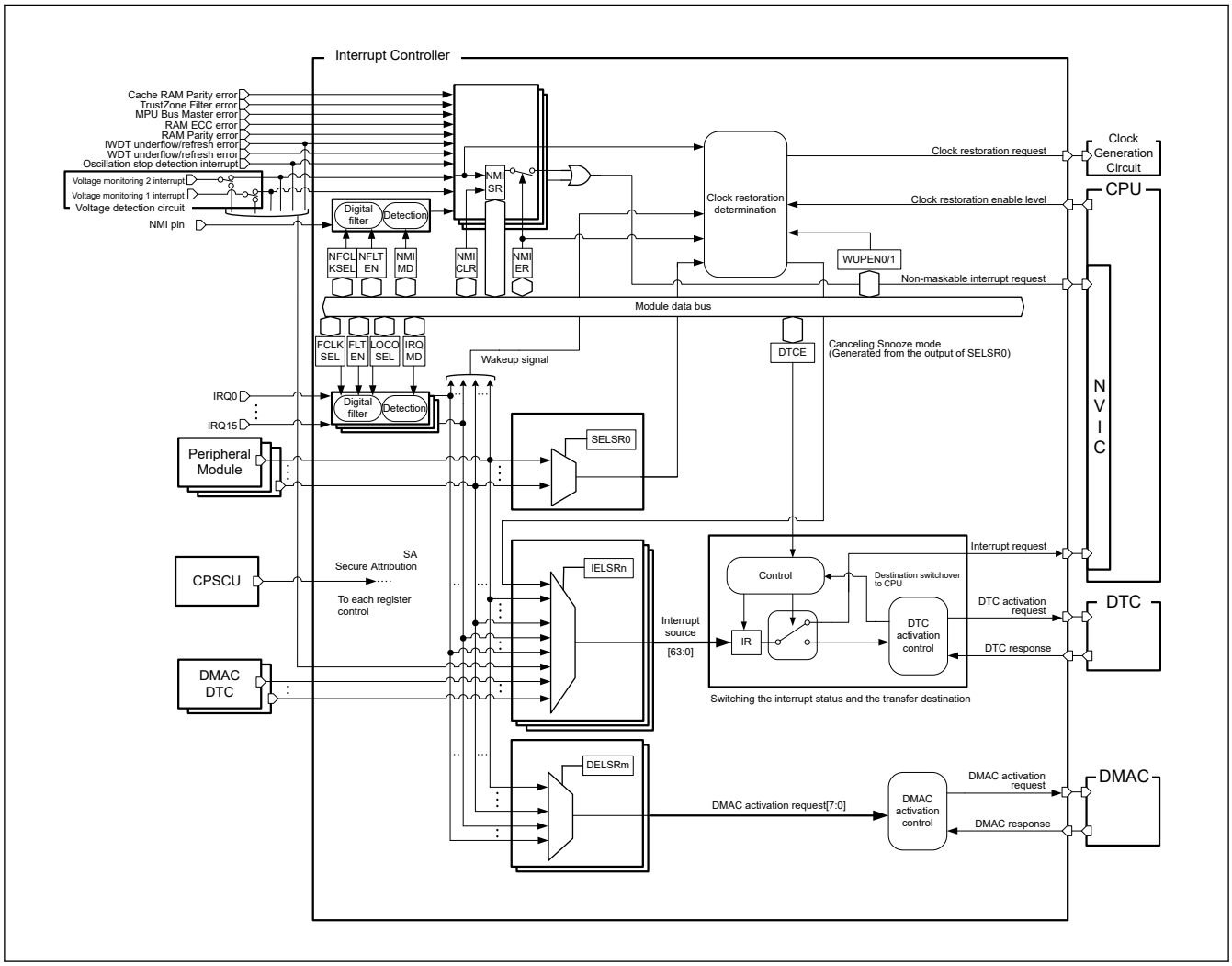

Figure 12.1 ICU block diagram

Table 12.2 lists the ICU input/output pins.

Table 12.2 ICU I/O pins

Pin name	I/O	Description
NMI	Input	Non-maskable interrupt request pin
IRQi (i = 0 to 15)	Input	External interrupt request pins

12.2 Register Descriptions

This chapter does not describe the Arm® NVIC internal registers. For information about these registers, see ARM Limited., ARM® Cortex®-M33 Processor Technical Reference Manual (ARM 100230).

12.2.1 ICUSARA : Interrupt Controller Unit Security Attribution Register A

Base address: CPSCU = 0x4000_8000

Offset address: 0x40

Bit position:	31	30	29	28	27	26	25	24	23	22	21	20	19	18	17	16
Bit field:	—	—	—	—	—	—	—	—	—	—	—	—	—	—	—	—
Value after reset:	1	1	1	1	1	1	1	1	1	1	1	1	1	1	1	1

Bit position:	15	14	13	12	11	10	9	8	7	6	5	4	3	2	1	0
Bit field:	SAIRQ CR15	SAIRQ CR14	SAIRQ CR13	SAIRQ CR12	SAIRQ CR11	SAIRQ CR10	SAIRQ CR9	SAIRQ CR8	SAIRQ CR7	SAIRQ CR6	SAIRQ CR5	SAIRQ CR4	SAIRQ CR3	SAIRQ CR2	SAIRQ CR1	SAIRQ CR0
Value after reset:	1	1	1	1	1	1	1	1	1	1	1	1	1	1	1	1

Bit	Symbol	Function	R/W
15:0	SAIRQCR15 to SAIRQCR0	Security attributes of registers for the IRQCRn register 0: Secure 1: Non-secure	R/W
31:16	—	These bits are read as 1. The write value should be 1.	R/W

Note: Only Secure access can write to this register. Both Secure access and Non-secure read access are allowed but Non-secure write access is not allowed and TrustZone access error is not generated.

Note: This register is write-protected by PRCR register.

SAIRQCRn bits (Security attributes of registers for the IRQCRn register)

The target registers are as follows:

- IRQCR0 to IRQCR15 registers
- WUPEN0.IRQWUPEN[15:0] bits

12.2.2 ICUSARB : Interrupt Controller Unit Security Attribution Register B

Base address: CPSCU = 0x4000_8000

Offset address: 0x44

Bit position:	31	30	29	28	27	26	25	24	23	22	21	20	19	18	17	16
Bit field:	—	—	—	—	—	—	—	—	—	—	—	—	—	—	—	—
Value after reset:	1	1	1	1	1	1	1	1	1	1	1	1	1	1	1	1

Bit position:	15	14	13	12	11	10	9	8	7	6	5	4	3	2	1	0
Bit field:	—	—	—	—	—	—	—	—	—	—	—	—	—	—	—	SANMI
Value after reset:	1	1	1	1	1	1	1	1	1	1	1	1	1	1	1	1

Bit	Symbol	Function	R/W
0	SANMI	Security attributes of registers for nonmaskable interrupt 0: Secure 1: Non-secure	R/W
31:1	—	These bits are read as 1. The write value should be 1.	R/W

Note: Only Secure access can write to this register. Both Secure access and Non-secure read access are allowed but Non-secure write access is not allowed and TrustZone access error is not generated.

Note: This register is write-protected by PRCR register.

SANMI bit (Security attributes of registers for nonmaskable interrupt)

Security attributes of registers for non-maskable interrupt. The target registers are as follows:

- NMIER

- NMICLR
- NMICR

The value of AIRCR.BFHFNMINS bit [13] in Application Interrupt and Reset Control Register of ARM CPU should be the same as the value of security attribution. The initial values of AIRCR.BFHFNMINS and the SANMI bits are different. AIRCR.BFHFNMINS is secure and SANMI is non-secure. Polarity has the same meaning so program these to match.

Note: Only one of Secure and Non-secure can set security attribution for non-maskable interrupt-related registers. If you program the Secure attribute as secure, it always goes to the Secure interrupt handler. To release any of the non-maskable interrupt sources to the non-secure user, write a function to execute a nonsecure program from the interrupt handler for Secure.

12.2.3 ICUSARC : Interrupt Controller Unit Security Attribution Register C

Base address: CPSCU = 0x4000_8000

Offset address: 0x48

Bit position:	31	30	29	28	27	26	25	24	23	22	21	20	19	18	17	16
Bit field:	—	—	—	—	—	—	—	—	—	—	—	—	—	—	—	—
Value after reset:	1	1	1	1	1	1	1	1	1	1	1	1	1	1	1	1

Bit position:	15	14	13	12	11	10	9	8	7	6	5	4	3	2	1	0
Bit field:	—	—	—	—	—	—	—	—	SADMAC7	SADMAC6	SADMAC5	SADMAC4	SADMAC3	SADMAC2	SADMAC1	SADMAC0
Value after reset:	1	1	1	1	1	1	1	1	1	1	1	1	1	1	1	1

Bit	Symbol	Function	R/W
7:0	SADMAC7 to SADMAC0	Security attributes of registers for DMAC channel 0: Secure 1: Non-secure	R/W
31:8	—	These bits are read as 1. The write value should be 1.	R/W

Note: Only Secure access can write to this register. Both Secure access and Non-secure read access are allowed but Non-secure write access is not allowed and TrustZone access error is not generated.

Note: This register is write-protected by PRCR register.

SADMACn bits (Security attributes of registers for DMAC channel)

Security attributes of registers for DMAC channel. This register is referred to as the security attribute of the ICU and DMAC registers.

The controlled ICU register is:

- DELSRn

The controlled DMAC registers are:

- DMACn.DMSAR
- DMACn.DMSRR
- DMACn.DMDAR
- DMACn.DMDRR
- DMACn.DMCRA
- DMACn.DMCRB
- DMACn.DMTMD
- DMACn.DMINT
- DMACn.DMAMD
- DMACn.DMOFR

- DMACn.DMCNT
- DMACn.DMREQ
- DMACn.DMSTS
- DMACn.DMSBS
- DMACn.DMDBS
- DMACn.DMBWR

For details on DMAC registers, see section 15, DMA Controller (DMAC).

12.2.4 ICUSARD : Interrupt Controller Unit Security Attribution Register D

Base address: CPSCU = 0x4000_8000

Offset address: 0x4C

Bit position:	31	30	29	28	27	26	25	24	23	22	21	20	19	18	17	16
Bit field:	—	—	—	—	—	—	—	—	—	—	—	—	—	—	—	—
Value after reset:	1	1	1	1	1	1	1	1	1	1	1	1	1	1	1	1

Bit position:	15	14	13	12	11	10	9	8	7	6	5	4	3	2	1	0
Bit field:	—	—	—	—	—	—	—	—	—	—	—	—	—	—	—	SASELSR0
Value after reset:	1	1	1	1	1	1	1	1	1	1	1	1	1	1	1	1

Bit	Symbol	Function	R/W
0	SASELSR0	Security attributes of registers for SELSR0 0: Secure 1: Non-secure	R/W
31:1	—	These bits are read as 1. The write value should be 1.	R/W

Note: Only Secure access can write to this register. Both Secure access and Non-secure read access are allowed but Non-secure write access is not allowed and TrustZone access error is not generated.

Note: This register is write-protected by PRCR register.

12.2.5 ICUSARE : Interrupt Controller Unit Security Attribution Register E

Base address: CPSCU = 0x4000_8000

Offset address: 0x50

Bit position:	31	30	29	28	27	26	25	24	23	22	21	20	19	18	17	16
Bit field:	SAIIC0WUP	SAAGT1CBWUP	SAAGT1CAWUP	SAAGT1UDWUP	—	—	SARTCPRDWUP	SARTCALMWUP	—	—	—	—	SALVD2WUP	SALVD1WUP	—	SAIWDTWUP
Value after reset:	1	1	1	1	1	1	1	1	1	1	1	1	1	1	1	1

Bit position:	15	14	13	12	11	10	9	8	7	6	5	4	3	2	1	0
Bit field:	—	—	—	—	—	—	—	—	—	—	—	—	—	—	—	—
Value after reset:	1	1	1	1	1	1	1	1	1	1	1	1	1	1	1	1

Bit	Symbol	Function	R/W
15:0	—	These bits are read as 1. The write value should be 1.	R/W
16	SAIWDTWUP	Security attributes of registers for WUPEN0.b16 0: Secure 1: Non-secure	R/W
17	—	This bit is read as 1. The write value should be 1.	R/W

Bit	Symbol	Function	R/W
18	SALVD1WUP	Security attributes of registers for WUPEN0.b18 0: Secure 1: Non-secure	R/W
19	SALVD2WUP	Security attributes of registers for WUPEN0.b19 0: Secure 1: Non-secure	R/W
23:20	—	These bits are read as 1. The write value should be 1.	R/W
24	SARTCALMWUP	Security attributes of registers for WUPEN0.b24 0: Secure 1: Non-secure	R/W
25	SARTCPRDWUP	Security attributes of registers for WUPEN0.b25 0: Secure 1: Non-secure	R/W
27:26	—	These bits are read as 1. The write value should be 1.	R/W
28	SAAGT1UDWUP	Security attributes of registers for WUPEN0.b28 0: Secure 1: Non-secure	R/W
29	SAAGT1CAWUP	Security attributes of registers for WUPEN0.b29 0: Secure 1: Non-secure	R/W
30	SAAGT1CBWUP	Security attributes of registers for WUPEN0.b30 0: Secure 1: Non-secure	R/W
31	SAIIC0WUP	Security attributes of registers for WUPEN0.b31 0: Secure 1: Non-secure	R/W

Note: Only Secure access can write to this register. Both Secure access and Non-secure read access are allowed but Non-secure write access is not allowed and TrustZone access error is not generated.
Note: This register is write-protected by PRCR register.

12.2.6 ICUSARF : Interrupt Controller Unit Security Attribution Register F

Base address: CPSCU = 0x4000_8000

Offset address: 0x54

Bit position:	31	30	29	28	27	26	25	24	23	22	21	20	19	18	17	16
Bit field:	—	—	—	—	—	—	—	—	—	—	—	—	—	—	—	—
Value after reset:	1	1	1	1	1	1	1	1	1	1	1	1	1	1	1	1

Bit position:	15	14	13	12	11	10	9	8	7	6	5	4	3	2	1	0
Bit field:	—	—	—	—	—	—	—	—	SASOSCWUP	—	—	—	—	—	—	—
Value after reset:	1	1	1	1	1	1	1	1	1	1	1	1	1	1	1	1

Bit	Symbol	Function	R/W
6:0	—	These bits are read as 1.	R/W
7	SASOSCWUP	Security attributes of registers for WUPEN1.b7 0: Secure 1: Non-secure	R/W
31:8	—	These bits are read as 1.	R/W

Note: Only Secure access can write to this register. Both Secure access and Non-secure read access are allowed but Non-secure write access is not allowed and TrustZone access error is not generated.
Note: This register is write-protected by PRCR register.

12.2.7 ICUSARG : Interrupt Controller Unit Security Attribution Register G

Base address: CPSCU = 0x4000_8000

Offset address: 0x70

Bit position:	31	30	29	28	27	26	25	24	23	22	21	20	19	18	17	16
Bit field:	SAIELSR31	SAIELSR30	SAIELSR29	SAIELSR28	SAIELSR27	SAIELSR26	SAIELSR25	SAIELSR24	SAIELSR23	SAIELSR22	SAIELSR21	SAIELSR20	SAIELSR19	SAIELSR18	SAIELSR17	SAIELSR16
Value after reset:	1	1	1	1	1	1	1	1	1	1	1	1	1	1	1	1

Bit position:	15	14	13	12	11	10	9	8	7	6	5	4	3	2	1	0
Bit field:	SAIELSR15	SAIELSR14	SAIELSR13	SAIELSR12	SAIELSR11	SAIELSR10	SAIELSR9	SAIELSR8	SAIELSR7	SAIELSR6	SAIELSR5	SAIELSR4	SAIELSR3	SAIELSR2	SAIELSR1	SAIELSR0
Value after reset:	1	1	1	1	1	1	1	1	1	1	1	1	1	1	1	1

Bit	Symbol	Function	R/W
31:0	SAIELSR31 to SAIELSR0	Security attributes of registers for IELSR31 to IELSR0 0: Secure 1: Non-secure	R/W

Note: Only Secure access can write to this register. Both Secure access and Non-secure read access are allowed but Non-secure write access is not allowed and TrustZone access error is not generated.

Note: This register is write-protected by PRCR register.

SAIELSRn bits (Security attributes of registers for IELSR31 to IELSR0)

The Secure Attribute managed within the Arm CPU NVIC must match the security attribution of IELSEn (n = 0 to 31). NVIC internal registers are in NVIC_ITNS0[31:0]. The initial values of NVIC_ITNS0 and ICUSARG are different. NVIC_ITNS0 is secure and ICUSARG is non-secure. Polarity has the same meaning so program these to match.

12.2.8 ICUSARH : Interrupt Controller Unit Security Attribution Register H

Base address: CPSCU = 0x4000_8000

Offset address: 0x74

Bit position:	31	30	29	28	27	26	25	24	23	22	21	20	19	18	17	16
Bit field:	SAIELSR63	SAIELSR62	SAIELSR61	SAIELSR60	SAIELSR59	SAIELSR58	SAIELSR57	SAIELSR56	SAIELSR55	SAIELSR54	SAIELSR53	SAIELSR52	SAIELSR51	SAIELSR50	SAIELSR49	SAIELSR48
Value after reset:	1	1	1	1	1	1	1	1	1	1	1	1	1	1	1	1

Bit position:	15	14	13	12	11	10	9	8	7	6	5	4	3	2	1	0
Bit field:	SAIELSR47	SAIELSR46	SAIELSR45	SAIELSR44	SAIELSR43	SAIELSR42	SAIELSR41	SAIELSR40	SAIELSR39	SAIELSR38	SAIELSR37	SAIELSR36	SAIELSR35	SAIELSR34	SAIELSR33	SAIELSR32
Value after reset:	1	1	1	1	1	1	1	1	1	1	1	1	1	1	1	1

Bit	Symbol	Function	R/W
31:0	SAIELSR63 to SAIELSR32	Security attributes of registers for IELSR63 to IELSR32 0: Secure 1: Non-secure	R/W

Note: Only Secure access can write to this register. Both Secure access and Non-secure read access are allowed but Non-secure write access is not allowed and TrustZone access error is not generated.

Note: This register is write-protected by PRCR register.

SAIELSRn bits (Security attributes of registers for IELSR63 to IELSR32)

The Secure Attribute managed within the ARM CPU NVIC must match the security attribution of IELSEn (n = 32 to 63). NVIC internal registers are in NVIC_ITNS1[31:0]. The initial values of NVIC_ITNS1 and ICUSARH are different. NVIC_ITNS1 is secure and ICUSARH is non-secure. Polarity has the same meaning so program these to match.

12.2.9 ICUSARM : Interrupt Controller Unit Security Attribution Register M

Base address: CPSCU = 0x4000_8000

Offset address: 0x58

Bit position:	31	30	29	28	27	26	25	24	23	22	21	20	19	18	17	16
Bit field:	—	—	—	—	—	—	—	—	—	—	—	—	—	—	—	—
Value after reset:	1	1	1	1	1	1	1	1	1	1	1	1	1	1	1	1

Bit position:	15	14	13	12	11	10	9	8	7	6	5	4	3	2	1	0
Bit field:	—	—	—	—	—	—	—	—	—	SAEXLVDWUP	SALVDVRTCWUP	SAEXLVDVBATWUP	SAINTURE1WUP	SAINTUR1WUP	SAINTURE0WUP	SAINTUR0WUP
Value after reset:	1	1	1	1	1	1	1	1	1	1	1	1	1	1	1	1

Bit	Symbol	Function	R/W
0	SAINTUR0WUP	Security attributes of registers for WUPEN2.b0 0: Secure 1: Non-secure	R/W
1	SAINTURE0WUP	Security attributes of registers for WUPEN2.b1 0: Secure 1: Non-secure	R/W
2	SAINTUR1WUP	Security attributes of registers for WUPEN2.b2 0: Secure 1: Non-secure	R/W
3	SAINTURE1WUP	Security attributes of registers for WUPEN2.b3 0: Secure 1: Non-secure	R/W
4	SAEXLVDVBATWUP	Security attributes of registers for WUPEN2.b4 0: Secure 1: Non-secure	R/W
5	SALVDVRTCWUP	Security attributes of registers for WUPEN2.b5 0: Secure 1: Non-secure	R/W
6	SAEXLVDWUP	Security attributes of registers for WUPEN2.b6 0: Secure 1: Non-secure	R/W
31:7	—	These bits are read as 1.	R/W

Note: Only Secure access can write to this register. Both Secure access and Non-secure read access are allowed but Non-secure write access is not allowed and TrustZone access error is not generated.

Note: This register is write-protected by PRCR register.

12.2.10 IRQCRi : IRQ Control Register i (i = 0 to 15)

Base address: ICU = 0x4000_6000

Offset address: 0x000 + 0x1 × i

Bit position:	7	6	5	4	3	2	1	0
Bit field:	FLTEN	—	FCLKSEL[1:0]		LOCOSEL	—	IRQMD[1:0]	
Value after reset:	0	0	0	0	0	0	0	0

Bit	Symbol	Function	R/W
1:0	IRQMD[1:0]	IRQi Detection Sense Select 0 0: Falling edge 0 1: Rising edge 1 0: Rising and falling edges 1 1: Low level	R/W
2	—	This bit is read as 0. The write value should be 0.	R/W
3	LOCOSEL	IRQi Digital Filter Sampling LOCO Clock Select 0: LOCO not selected 1: LOCO selected	R/W
5:4	FCLKSEL[1:0]	IRQi Digital Filter Sampling Clock Select 0 0: PCLKB 0 1: PCLKB/8 1 0: PCLKB/32 1 1: PCLKB/64	R/W
6	—	This bit is read as 0. The write value should be 0.	R/W
7	FLTEN	IRQi Digital Filter Enable 0: Digital filter disabled 1: Digital filter enabled	R/W

Note: If the security attribution is configured as Secure:
- Secure access and Non-secure read access are allowed
- Non-secure write access is ignored, and TrustZone access error is not generated.

If the security attribution is configured as Non-secure:
- Secure and Non-secure access are allowed.

The IRQCRi register changes must satisfy the following conditions:

- For a CPU interrupt or DTC trigger:
  Change the IRQCRi register value before setting the target IELSRn register (n = 0 to 63).
  The register value should be changed only when the value of the target IELSRn register is 0x0000.
- For a DMAC trigger:
  Change the IRQCRi register value before setting the target DELSRn register (n = 0 to 7).
  The register value should be changed only when the value of the target DELSRn register is 0x0000.
- For a wakeup enable signal:
  Change the IRQCRi register setting before setting the target WUPEN0.IRQWUPEN[n] (n = 0 to 15). The register value should be changed when the target WUPEN0.IRQWUPEN[n] is 0.

IRQMD[1:0] bits (IRQi Detection Sense Select)

The IRQMD[1:0] bits set the detection sensing method for the IRQi external pin interrupt sources. For setting method when using external pin interrupt, see section 12.5.6. External Pin Interrupts.

LOCOSEL bit (IRQi Digital Filter Sampling LOCO Clock Select)

The LOCOSEL bit selects the digital filter sampling clock for the IRQi external pin interrupt request pins, selectable to LOCO (LOCO cycle).

When LOCO is selected for the digital filter sampling clock, the setting of FCLKSEL[1:0] bits is invalid.

FCLKSEL[1:0] bits (IRQi Digital Filter Sampling Clock Select)

The FCLKSEL[1:0] bits select the digital filter sampling clock for the IRQi external pin interrupt request pins, selectable to:

- PCLKB (every cycle)
- PCLKB/8 (once every 8 cycles)
- PCLKB/32 (once every 32 cycles)
- PCLKB/64 (once every 64 cycles)

For details of the digital filter, see section 12.5.5. Digital Filter.

FLTEN bit (IRQi Digital Filter Enable)

The FLTEN bit enables the digital filter used for the IRQi external pin interrupt sources. The digital filter is enabled when the IRQCRi.FLTEN bit is 1 and disabled when the IRQCRi.FLTEN bit is 0. The IRQi pin level is sampled at the clock cycle specified in the IRQCRi.FCLKSEL[1:0] bits and IRQCRi.LOCOSEL bit. When the sampled level matches three times, the output level from the digital filter changes. For details of the digital filter, see section 12.5.5. Digital Filter.

12.2.11 NMISR : Non-Maskable Interrupt Status Register

Base address: ICU = 0x4000_6000

Offset address: 0x140

Bit position:	15	14	13	12	11	10	9	8	7	6	5	4	3	2	1	0
Bit field:	CPEST	—	TZFST	—	BUSMST	—	RECCST	RPEST	NMIST	OSTST	—	—	LVD2ST	LVD1ST	WDTST	IWDTST
Value after reset:	0	0	0	0	0	0	0	0	0	0	0	0	0	0	0	0

Bit	Symbol	Function	R/W
0	IWDTST	IWDT Underflow/Refresh Error Interrupt Status Flag 0: Interrupt not requested 1: Interrupt requested	R
1	WDTST	WDT Underflow/Refresh Error Interrupt Status Flag 0: Interrupt not requested 1: Interrupt requested	R
2	LVD1ST	Voltage Monitor 1 Interrupt Status Flag 0: Interrupt not requested 1: Interrupt requested	R
3	LVD2ST	Voltage Monitor 2 Interrupt Status Flag 0: Interrupt not requested 1: Interrupt requested	R
5:4	—	These bits are read as 0.	R
6	OSTST	Main Clock Oscillation Stop Detection Interrupt Status Flag 0: Interrupt not requested for main clock oscillation stop 1: Interrupt requested for main clock oscillation stop	R
7	NMIST	NMI Pin Interrupt Status Flag 0: Interrupt not requested 1: Interrupt requested	R
8	RPEST	SRAM Parity Error Interrupt Status Flag 0: Interrupt not requested 1: Interrupt requested	R
9	RECCST	SRAM ECC Error Interrupt Status Flag 0: Interrupt not requested 1: Interrupt requested	R
10	—	This bit is read as 0.	R
11	BUSMST	Bus Master MPU Error Interrupt Status Flag 0: Interrupt not requested 1: Interrupt requested	R
12	—	This bit is read as 0.	R
13	TZFST	TrustZone Filter Error Interrupt Status Flag 0: Interrupt not requested 1: Interrupt requested	R
14	—	This bit is read as 0.	R
15	CPEST	Cache RAM Parity Error Status Flag 0: Interrupt not requested 1: Interrupt requested	R

The NMISR register monitors the status of non-maskable interrupt sources. Writes to the NMISR register are ignored. The setting in the Non-Maskable Interrupt Enable Register (NMIER) does not affect the status flags in this register. Before the end of the non-maskable interrupt handler, check that all of the bits in this register are set to 0 to confirm that no other NMI requests are generated during handler processing.

IWDTST flag (IWDT Underflow/Refresh Error Interrupt Status Flag)

The IWDTST flag indicates an IWDT underflow/refresh error interrupt request. It is read-only and cleared by the NMICLR.IWDTCLR bit.

[Setting condition]

When the IWDT underflow/refresh error interrupt is generated and this interrupt source is enabled.

[Clearing condition]

When 1 is written to the NMICLR.IWDTCLR bit.

WDTST flag (WDT Underflow/Refresh Error Interrupt Status Flag)

The WDTST flag indicates a WDT underflow/refresh error interrupt request. It is read-only and cleared by the NMICLR.WDTCLR bit.

[Setting condition]

When the WDT underflow/refresh error interrupt is generated.

[Clearing condition]

When 1 is written to the NMICLR.WDTCLR bit.

LVD1ST flag (Voltage Monitor 1 Interrupt Status Flag)

The LVD1ST flag indicates a request for voltage monitor 1 interrupt. It is read-only and cleared by the NMICLR.LVD1CLR bit.

[Setting condition]

When the voltage monitor 1 interrupt is generated and this interrupt source is enabled.

[Clearing condition]

When 1 is written to the NMICLR.LVD1CLR bit.

LVD2ST flag (Voltage Monitor 2 Interrupt Status Flag)

The LVD2ST flag indicates a request for voltage monitor 2 interrupt. It is read-only and cleared by the NMICLR.LVD2CLR bit.

[Setting condition]

When the voltage monitor 2 interrupt is generated and this interrupt source is enabled.

[Clearing condition]

When 1 is written to the NMICLR.LVD2CLR bit.

OSTST flag (Main Clock Oscillation Stop Detection Interrupt Status Flag)

The OSTST flag indicates a main clock oscillation stop detection interrupt request. It is read-only and cleared by the NMICLR.OSTCLR bit.

[Setting condition]

When the main clock oscillation stop detection interrupt is generated.

[Clearing condition]

When 1 is written to the NMICLR.OSTCLR bit.

NMIST flag (NMI Pin Interrupt Status Flag)

The NMIST flag indicates an NMI pin interrupt request. It is read-only and cleared by the NMICLR.NMICLR bit.

[Setting condition]

When an edge specified by the NMICR.NMIMD bit is input to the NMI pin.

[Clearing condition]

When 1 is written to the NMICLR.NMICLR bit.

RPEST flag (SRAM Parity Error Interrupt Status Flag)

The RPEST flag indicates an SRAM parity error interrupt request.

[Setting condition]

When an interrupt is generated in response to an SRAM parity error.

[Clearing condition]

When 1 is written to the NMICLR.RPECLR bit.

RECCST flag (SRAM ECC Error Interrupt Status Flag)

The RECCST flag indicates an SRAM ECC error interrupt request.

[Setting condition]

When an interrupt is generated in response to an SRAM ECC error.

[Clearing condition]

When 1 is written to the NMICLR.RECCCLR bit.

BUSMST flag (Bus Master MPU Error Interrupt Status Flag)

The BUSMST flag indicates a bus master error interrupt request.

[Setting condition]

When an interrupt is generated in response to a bus master error.

[Clearing condition]

When 1 is written to the NMICLR.BUSMCLR bit.

TZFST flag (TrustZone Filter Error Interrupt Status Flag)

This flag indicates the TrustZone Filter error interrupt request.

[Setting condition]

When an interrupt is generated in response to a TrustZone Filter error.

[Clearing condition]

When 1 is written to the NMICLR.TZFCLR bit.

CPEST flag (Cache RAM Parity Error Status Flag)

This flag indicates the cache RAM parity error interrupt request.

[Setting condition]

When an interrupt is generated in response to a cache RAM parity error.

[Clearing condition]

When 1 is written to the NMICLR.CPECLR bit.

12.2.12 NMIER : Non-Maskable Interrupt Enable Register

Base address: ICU = 0x4000_6000

Offset address: 0x120

Bit position:	15	14	13	12	11	10	9	8	7	6	5	4	3	2	1	0
Bit field:	CPEEN	—	TZFEN	—	BUSMEN	—	RECCEN	RPEEN	NMIEN	OSTEN	—	—	LVD2EN	LVD1EN	WDTEN	IWDTEN
Value after reset:	0	0	0	0	0	0	0	0	0	0	0	0	0	0	0	0

Bit	Symbol	Function	R/W
0	IWDTEN	IWDT Underflow/Refresh Error Interrupt Enable 0: Disabled 1: Enabled	R/W*1 *2
1	WDTEN	WDT Underflow/Refresh Error Interrupt Enable 0: Disabled 1: Enabled	R/W*1 *2
2	LVD1EN	Voltage monitor 1 Interrupt Enable 0: Disabled 1: Enabled	R/W*1 *2
3	LVD2EN	Voltage monitor 2 Interrupt Enable 0: Disabled 1: Enabled	R/W*1 *2
5:4	—	These bits are read as 0. The write value should be 0.	R/W
6	OSTEN	Main Clock Oscillation Stop Detection Interrupt Enable 0: Disabled 1: Enabled	R/W*1 *2
7	NMIEN	NMI Pin Interrupt Enable 0: Disabled 1: Enabled	R/W*1
8	RPEEN	SRAM Parity Error Interrupt Enable 0: Disabled 1: Enabled	R/W*1
9	RECCEN	SRAM ECC Error Interrupt Enable 0: Disabled 1: Enabled	R/W*1
10	—	This bit is read as 0. The write value should be 0.	R/W
11	BUSMEN	Bus Master MPU Error Interrupt Enable 0: Disabled 1: Enabled	R/W*1
12	—	This bit is read as 0. The write value should be 0.	R/W
13	TZFEN	TrustZone Filter Error Interrupt Enable 0: Disabled 1: Enabled	R/W*1
14	—	This bit is read as 0. The write value should be 0.	R/W
15	CPEEN	Cache RAM Parity Error Interrupt Enable 0: Disabled 1: Enabled	R/W

Note: If the security attribution is configured as Secure:
- Secure access and Non-secure read access are allowed
- Non-secure write access is ignored, and TrustZone access error is not generated.

If the security attribution is configured as Non-secure:
- Secure and Non-secure access are allowed.

Note 1. You can write 1 to this bit only once after reset. Subsequent write accesses are invalid. Writing 0 to this bit is invalid.
Note 2. Do not write 1 to this bit when the source is used as an event signal.

IWDTEN bit (IWDT Underflow/Refresh Error Interrupt Enable)

The IWDTEN bit enables IWDT underflow/refresh error interrupt as an NMI trigger.

WDTEN bit (WDT Underflow/Refresh Error Interrupt Enable)

The WDTEN bit enables WDT underflow/refresh error interrupt as an NMI trigger.

LVD1EN bit (Voltage monitor 1 Interrupt Enable)

The LVD1EN bit enables voltage monitor 1 interrupt as an NMI trigger.

LVD2EN bit (Voltage monitor 2 Interrupt Enable)

The LVD2EN bit enables voltage monitor 2 interrupt as an NMI trigger.

OSTEN bit (Main Clock Oscillation Stop Detection Interrupt Enable)

The OSTEN bit enables main clock oscillation stop detection interrupt as an NMI trigger.

NMIEN bit (NMI Pin Interrupt Enable)

The NMIEN bit enables NMI pin interrupt as an NMI trigger.

RPEEN bit (SRAM Parity Error Interrupt Enable)

The RPEEN bit enables SRAM parity error interrupt as an NMI trigger.

RECCEN bit (SRAM ECC Error Interrupt Enable)

The RECCEN bit enables SRAM ECC error interrupt as an NMI trigger.

BUSMEN bit (Bus Master MPU Error Interrupt Enable)

The BUSMEN bit enables bus master error interrupt as an NMI trigger.

TZFEN bit (TrustZone Filter Error Interrupt Enable)

TZFEN bit enables the TrustZone Filter error interrupt as an NMI trigger.

CPEEN bit (Cache RAM Parity Error Interrupt Enable)

CPEEN bit enables the Cache RAM parity error interrupt as an NMI trigger.

12.2.13 NMICLR : Non-Maskable Interrupt Status Clear Register

Base address: ICU = 0x4000_6000

Offset address: 0x130

Bit position:	15	14	13	12	11	10	9	8	7	6	5	4	3	2	1	0
Bit field:	CPECLR	—	TZFCLR	—	BUSMCLR	—	RECCCLR	RPECLR	NMICLR	OSTCLR	—	—	LVD2CLR	LVD1CLR	WDTCLR	IWDTCLR
Value after reset:	0	0	0	0	0	0	0	0	0	0	0	0	0	0	0	0

Bit	Symbol	Function	R/W
0	IWDTCLR	IWDT Underflow/Refresh Error Interrupt Status Flag Clear 0: No effect 1: Clear the NMISR.IWDTST flag	R/W*1
1	WDTCLR	WDT Underflow/Refresh Error Interrupt Status Flag Clear 0: No effect 1: Clear the NMISR.WDTST flag	R/W*1
2	LVD1CLR	Voltage Monitor 1 Interrupt Status Flag Clear 0: No effect 1: Clear the NMISR.LVD1ST flag	R/W*1
3	LVD2CLR	Voltage Monitor 2 Interrupt Status Flag Clear 0: No effect 1: Clear the NMISR.LVD2ST flag.	R/W*1
5:4	—	These bits are read as 0. The write value should be 0.	R/W
6	OSTCLR	Oscillation Stop Detection Interrupt Status Flag Clear 0: No effect 1: Clear the NMISR.OSTST flag	R/W*1
7	NMICLR	NMI Pin Interrupt Status Flag Clear 0: No effect 1: Clear the NMISR.NMIST flag	R/W*1
8	RPECLR	SRAM Parity Error Interrupt Status Flag Clear 0: No effect 1: Clear the NMISR.RPEST flag	R/W*1

Bit	Symbol	Function	R/W
9	RECCCLR	SRAM ECC Error Interrupt Status Flag Clear 0: No effect 1: Clear the NMISR.RECCST flag	R/W*1
10	—	This bit is read as 0. The write value should be 0.	R/W
11	BUSMCLR	Bus Master MPU Error Interrupt Status Flag Clear 0: No effect 1: Clear the NMISR.BUSMST flag	R/W*1
12	—	This bit is read as 0. The write value should be 0.	R/W
13	TZFCLR	TrustZone Filter Error Interrupt Status Flag Clear 0: No effect 1: Clear the NMISR.TZFST flag	R/W*1
14	—	This bit is read as 0. The write value should be 0.	R/W
15	CPECLR	Cache RAM Parity Error Interrupt Status Flag Clear 0: No effect 1: Clear the NMISR.CPEST flag	R/W*1

Note: If the security attribution is configured as Secure:
- Secure access and Non-secure read access are allowed
- Non-secure write access is ignored, and TrustZone access error is not generated.

If the security attribution is configured as Non-secure:
- Secure and Non-secure access are allowed.

Note 1. Only write 1 to this bit.

IWDTCLR bit (IWDT Underflow/Refresh Error Interrupt Status Flag Clear)

Writing 1 to the IWDTCLR bit clears the NMISR.IWDTST flag. This bit is read as 0.

WDTCLR bit (WDT Underflow/Refresh Error Interrupt Status Flag Clear)

Writing 1 to the WDTCLR bit clears the NMISR.WDTST flag. This bit is read as 0.

LVD1CLR bit (Voltage Monitor 1 Interrupt Status Flag Clear)

Writing 1 to the LVD1CLR bit clears the NMISR.LVD1ST flag. This bit is read as 0.

LVD2CLR bit (Voltage Monitor 2 Interrupt Status Flag Clear)

Writing 1 to the LVD2CLR bit clears the NMISR.LVD2ST flag. This bit is read as 0.

OSTCLR bit (Oscillation Stop Detection Interrupt Status Flag Clear)

Writing 1 to the OSTCLR bit clears the NMISR.OSTST flag. This bit is read as 0.

NMICLR bit (NMI Pin Interrupt Status Flag Clear)

Writing 1 to the NMICLR bit clears the NMISR.NMIST flag. This bit is read as 0.

RPECLR bit (SRAM Parity Error Interrupt Status Flag Clear)

Writing 1 to the RPECLR bit clears the NMISR.RPEST flag. This bit is read as 0.

RECCCLR bit (SRAM ECC Error Interrupt Status Flag Clear)

Writing 1 to the RECCCLR bit clears the NMISR.RECCST flag. This bit is read as 0.

BUSMCLR bit (Bus Master MPU Error Interrupt Status Flag Clear)

Writing 1 to the BUSMCLR bit clears the NMISR.BUSMST flag. This bit is read as 0.

TZFCLR bit (TrustZone Filter Error Interrupt Status Flag Clear)

Writing 1 to the TZFCLR bit clears the NMISR.TZFST flag. This bit is read as 0.

CPECLR bit (Cache RAM Parity Error Interrupt Status Flag Clear)

Writing 1 to the CPECLR bit clears the NMISR.CPEST flag. This bit is read as 0.

12.2.14 NMICR : NMI Pin Interrupt Control Register

Base address: ICU = 0x4000_6000

Offset address: 0x100

Bit position:	7	6	5	4	3	2	1	0
Bit field:	NFLTEN	—	NFCLKSEL[1:0]		—	—	—	NMIMD
Value after reset:	0	0	0	0	0	0	0	0

Bit	Symbol	Function	R/W
0	NMIMD	NMI Detection Set 0: Falling edge 1: Rising edge	R/W
3:1	—	These bits are read as 0. The write value should be 0.	R/W
5:4	NFCLKSEL[1:0]	NMI Digital Filter Sampling Clock Select 0 0: PCLKB 0 1: PCLKB/8 1 0: PCLKB/32 1 1: PCLKB/64	R/W
6	—	This bit is read as 0. The write value should be 0.	R/W
7	NFLTEN	NMI Digital Filter Enable 0: Disabled 1: Enabled	R/W

Note: If the security attribution is configured as Secure:
- Secure access and Non-secure read access are allowed
- Non-secure write access is ignored, and TrustZone access error is not generated.

If the security attribution is configured as Non-secure:
- Secure and Non-secure access are allowed.

Change the NMICR register settings before enabling NMI pin interrupts, that is, before setting NMIER.NMIEN to 1.

NMIMD bit (NMI Detection Set)

The NMIMD bit selects the detection sensing method for the NMI pin interrupts.

NFCLKSEL[1:0] bits (NMI Digital Filter Sampling Clock Select)

The NFCLKSEL[1:0] bits select the digital filter sampling clock for the NMI pin interrupts, selectable to:

- PCLKB (every cycle)
- PCLKB/8 (once every 8 cycles)
- PCLKB/32 (once every 32 cycles)
- PCLKB/64 (once every 64 cycles)

For details of the digital filter, see section 12.5.5. Digital Filter.

NFLTEN bit (NMI Digital Filter Enable)

The NFLTEN bit enables the digital filter used for NMI pin interrupts. The filter is enabled when NFLTEN is 1, and disabled when NFLTEN is 0. The NMI pin level is sampled at the clock cycle specified in NFCLKSEL[1:0]. When the sampled level matches three times, the output level from the digital filter changes. For details of the digital filter, see section 12.5.5. Digital Filter.

12.2.15 IELSRn : ICU Event Link Setting Register n (n = 0 to 63)

Base address: ICU = 0x4000_6000

Offset address: 0x300 + 0x4 × n

Bit position:	31	30	29	28	27	26	25	24	23	22	21	20	19	18	17	16
Bit field:	—	—	—	—	—	—	—	DTCE	—	—	—	—	—	—	—	IR
Value after reset:	0	0	0	0	0	0	0	0	0	0	0	0	0	0	0	0

Bit position:	15	14	13	12	11	10	9	8	7	6	5	4	3	2	1	0
Bit field:	—	—	—	—	—	—	—	IELS[8:0]								
Value after reset:	0	0	0	0	0	0	0	0	0	0	0	0	0	0	0	0

Bit	Symbol	Function	R/W
8:0	IELS[8:0]	ICU Event Link Select 0x00: Disable interrupts to the associated NVIC or DTC module Others: Event signal number to be linked. For details, see section 12.3.2. Event Number.	R/W
15:9	—	These bits are read as 0. The write value should be 0.	R/W
16	IR	Interrupt Status Flag 0: No interrupt request generated. 1: An interrupt request is generated.	R/W*1
23:17	—	These bits are read as 0. The write value should be 0.	R/W
24	DTCE	DTC Activation Enable 0: DTC activation is disabled. 1: DTC activation is enabled.	R/W
31:25	—	These bits are read as 0. The write value should be 0.	R/W

Note: If the security attribution is configured as Secure:
- Secure access and Non-secure read access are allowed
- Non-secure write access is ignored, and TrustZone access error is not generated.

If the security attribution is configured as Non-secure:
- Secure and Non-secure access are allowed.

Note: This register requires halfword or word access.

Note 1. Writing 1 to the IR flag is prohibited.

The IELSRn register selects the IRQi source used by the NVIC. For details, see Table 12.3. IELSRn corresponds to the NVIC IRQ input source number, where n = 0 to 63.

IELS[8:0] bits (ICU Event Link Select)

The IELS[8:0] bits link an event signal to the associated NVIC or DTC module. Event options are classified into 8 groups (groups 0 to 7). For details, see Table 12.3 and Table 12.4.

IR flag (Interrupt Status Flag)

The IR status flag indicates an individual interrupt request from the event specified in IELS[8:0].

[Setting condition]

When an interrupt request is received from the associated peripheral module or IRQi pin.

[Clearing condition]

- The IR flag is cleared to 0 by writing 0.
- When DTC.DISEL = 0, at the time other than the final transfer end in DTC transfer while DTCE = 1, the IR flag is again set and cleared by Hardware.
- When DTC.DISEL = 1, for DTC transfers while DTCE = 1, the hardware does not clear the IR flag. The flag is cleared by the CPU writing 0.

When DTC transfer except the last transfer is completed (DTCE bit is changed from 1 to 0).

During DTCE = 1, write 0 to IR register is prohibited.

For level detection, clearing of the IR flag should follow the steps below.

1. Negate the input interrupt signal.
2. Read access the peripheral once and wait for 2 clock cycles of the target module clock.
3. Clear the IR flag by writing 0.

DTCE bit (DTC Activation Enable)

When the DTCE bit is set to 1, the associated event is selected as the source for DTC activation.

[Setting condition]

- When 1 is written to the DTCE bit.

[Clearing condition]

- When the specified number of transfers is complete. For chain transfers, when the specified number of transfers for the last chain transfer is complete.
- When 0 is written to the DTCE bit.

Note: Error during DTC transfer

If an error response occurs during DTC transfer, the DTC notifies the ICU that an error has occurred. ICU clears all bits of the target IELSRn (n = 0 to 63). IELSRn that is not the target is not cleared.

Note: DTC transfer error in Snooze mode

When an error occurs in DTC transfer in Snooze mode, ICU issues a wakeup request. However, interrupt requests are not issued automatically. See section 16, Data Transfer Controller (DTC) for how to set the interrupt when a DTC error occurs.

12.2.16 DELSRn : DMAC Event Link Setting Register n (n = 0 to 7)

Base address: ICU = 0x4000_6000

Offset address: 0x280 + 0x4 × n

Bit position:	31	30	29	28	27	26	25	24	23	22	21	20	19	18	17	16
Bit field:	—	—	—	—	—	—	—	—	—	—	—	—	—	—	—	IR
Value after reset:	0	0	0	0	0	0	0	0	0	0	0	0	0	0	0	0

Bit position:	15	14	13	12	11	10	9	8	7	6	5	4	3	2	1	0
Bit field:	—	—	—	—	—	—	—	DELS[8:0]								
Value after reset:	0	0	0	0	0	0	0	0	0	0	0	0	0	0	0	0

Bit	Symbol	Function	R/W
8:0	DELS[8:0]	DMAC Event Link Select 0x00: Disable interrupts to the associated DMAC module. Others: Event signal number to be linked. For details, see Table 12.4.	R/W
15:9	—	These bits are read as 0. The write value should be 0.	R/W
16	IR	DMAC Activation Request Status Flag 0: No DMAC activation request occurred. 1: DMAC activation request occurred.	R/W*1
31:17	—	These bits are read as 0. The write value should be 0.	R/W

Note: If the security attribution is configured as Secure:
- Secure access and Non-secure read access are allowed
- Non-secure write access is ignored, and TrustZone access error is not generated.

If the security attribution is configured as Non-secure:
- Secure and Non-secure access are allowed.

Note: This register requires halfword or word access.

Note 1. Writing 1 to the IR flag is prohibited.

DELS[8:0] bit (DMAC Event Link Select)

The DELS[8:0] bits link an event signal to the associated DMAC module. Do not set the same event number in multiple DELSRn registers.

IR flag (DMAC Activation Request Status Flag)

The IR flag is the status flag of a DMAC activation request. This flag is associated with the DELS[8:0] bits of this register.

[Setting condition]

- The flag is set to 1 when a DMAC activation request is generated from the associated peripheral module or IRQi pin.

[Clearing conditions]

- When 0 is written to the IR flag.
- At the start of a DMA transfer after the DMAC activation request is issued.

Note: The IR flag is automatically cleared after completion of a DMA transfer. Therefore, do not write 0 unless an abort occurs. When 0 is written, DMA transfer operation cannot be guaranteed.

Note: Error during DMAC transfer

If an error response occurs during a DMAC transfer, the DMAC notifies the ICU that an error has occurred.

The ICU clears all bits of the target channel of DELSRn (n = 0 to 7). DELSRn that is not the target channel is not cleared.

12.2.17 SELSR0 : SYS Event Link Setting Register

Base address: ICU = 0x4000_6000

Offset address: 0x200

Bit position:	15	14	13	12	11	10	9	8	7	6	5	4	3	2	1	0
Bit field:	—	—	—	—	—	—	—	SELS[8:0]								
Value after reset:	0	0	0	0	0	0	0	0	0	0	0	0	0	0	0	0

Bit	Symbol	Function	R/W
8:0	SELS[8:0]	SYS Event Link Select 0x00: Disable event output to the associated low-power mode module Others: Event signal number to be linked. For details, see Table 12.4.	R/W
15:9	—	These bits are read as 0. The write value should be 0.	R/W

Note: If the security attribution is configured as Secure:
- Secure access and Non-secure read access are allowed
- Non-secure write access is ignored, and TrustZone access error is not generated.

If the security attribution is configured as Non-secure:
- Secure and Non-secure access are allowed.

The SELSR0 register selects the events that wake up the CPU from Snooze mode. You can use only the events listed in Table 12.4 checked as “Canceling Snooze mode”. When ICU_SNZCANCEL is selected in the IELSRn.IELS[8:0] bits, an interrupt is generated that cancels snooze mode.

Caution: For security attribution added to parts related to a series of actions, make sure to match all security attribution so that security holes cannot be created.

About security attribution to be matched

- **Event source to be set to SELSR0.**
- **SELSR0**
- **IELSRn (n = 0 to 63) to receive event No. 45 (ICU_SNZCANCEL)**
- **NVIC internal registers in the CPU of the interrupt specified in the previous item**
- **Interrupt Handler.**

12.2.18 WUPEN0 : Wake Up Interrupt Enable Register 0

Base address: ICU = 0x4000_6000

Offset address: 0x1A0

Bit position:	31	30	29	28	27	26	25	24	23	22	21	20	19	18	17	16
Bit field:	IIC0WUPEN	AGT1CBWUPEN	AGT1CAWUPEN	AGT1UDWUPEN	—	—	RTCPRDWUPEN	RTCALMWUPEN	—	—	—	—	LVD2WUPEN	LVD1WUPEN	—	IWDTWUPEN
Value after reset:	0	0	0	0	0	0	0	0	0	0	0	0	0	0	0	0

Bit position:	15	14	13	12	11	10	9	8	7	6	5	4	3	2	1	0
Bit field:	IRQWUPEN[15:0]															
Value after reset:	0	0	0	0	0	0	0	0	0	0	0	0	0	0	0	0

Bit	Symbol	Function	R/W
15:0	IRQWUPEN[15:0]	IRQn Interrupt Software Standby/Snooze Mode Returns Enable Bit (n = 0 to 15) 0: Software Standby/Snooze Mode returns by IRQn interrupt disabled 1: Software Standby/Snooze Mode returns by IRQn interrupt enabled	R/W
16	IWDTWUPEN	IWDT Interrupt Software Standby/Snooze Mode Returns Enable Bit 0: Software Standby/Snooze Mode returns by IWDT interrupt disabled 1: Software Standby/Snooze Mode returns by IWDT interrupt enabled	R/W
17	—	This bit is read as 0. The write value should be 0.	R/W
18	LVD1WUPEN	LVD1 Interrupt Software Standby/Snooze Mode Returns Enable Bit 0: Software Standby/Snooze Mode returns by LVD1 interrupt disabled 1: Software Standby/Snooze Mode returns by LVD1 interrupt enabled	R/W
19	LVD2WUPEN	LVD2 Interrupt Software Standby/Snooze Mode Returns Enable Bit 0: Software Standby/Snooze Mode returns by LVD2 interrupt disabled 1: Software Standby/Snooze Mode returns by LVD2 interrupt enabled	R/W
23:20	—	These bits are read as 0. The write value should be 0.	R/W
24	RTCALMWUPEN	RTC Alarm Interrupt Software Standby/Snooze Mode Returns Enable Bit 0: Software Standby/Snooze Mode returns by RTC alarm interrupt disabled 1: Software Standby/Snooze Mode returns by RTC alarm interrupt enabled	R/W
25	RTCPRDWUPEN	RTC Period Interrupt Software Standby/Snooze Mode Returns Enable Bit 0: Software Standby/Snooze Mode returns by RTC period interrupt disabled 1: Software Standby/Snooze Mode returns by RTC period interrupt enabled	R/W
27:26	—	These bits are read as 0. The write value should be 0.	R/W
28	AGT1UDWUPEN	AGT1 Underflow Interrupt Software Standby/Snooze Mode Returns Enable Bit 0: Software Standby/Snooze Mode returns by AGT1 underflow interrupt disabled 1: Software Standby/Snooze Mode returns by AGT1 underflow interrupt enabled	R/W
29	AGT1CAWUPEN	AGT1 Compare Match A Interrupt Software Standby/Snooze Mode Returns Enable Bit 0: Software Standby/Snooze Mode returns by AGT1 compare match A interrupt disabled 1: Software Standby/Snooze Mode returns by AGT1 compare match A interrupt enabled	R/W
30	AGT1CBWUPEN	AGT1 Compare Match B Interrupt Software Standby/Snooze Mode Returns Enable Bit 0: Software Standby/Snooze Mode returns by AGT1 compare match B interrupt disabled 1: Software Standby/Snooze Mode returns by AGT1 compare match B interrupt enabled	R/W
31	IIC0WUPEN	IIC0 Address Match Interrupt Software Standby/Snooze Mode Returns Enable Bit 0: Software Standby/Snooze Mode returns by IIC0 address match interrupt disabled 1: Software Standby/Snooze Mode returns by IIC0 address match interrupt enabled	R/W

Note: If the security attribution is configured as Secure:
- Secure access and Non-secure read access are allowed
- Non-secure write access is ignored, and TrustZone access error is not generated.

If the security attribution is configured as Non-secure:

- Secure and Non-secure access are allowed.

Note: The security attribution of this register is set for each wakeup event.
To avoid the occurrence of a security hole, the target event of a wakeup and the security attribution added to this bit must match.

12.2.19 WUPEN1 : Wake Up Interrupt Enable Register 1

Base address: ICU = 0x4000_6000

Offset address: 0x1A4

Bit position:	31	30	29	28	27	26	25	24	23	22	21	20	19	18	17	16
Bit field:	—	—	—	—	—	—	—	—	—	—	—	—	—	—	—	—
Value after reset:	0	0	0	0	0	0	0	0	0	0	0	0	0	0	0	0

Bit position:	15	14	13	12	11	10	9	8	7	6	5	4	3	2	1	0
Bit field:	—	—	—	—	—	—	—	—	SOSCWUPEN	—	—	—	—	—	—	—
Value after reset:	0	0	0	0	0	0	0	0	0	0	0	0	0	0	0	0

Bit	Symbol	Function	R/W
6:0	—	These bits are read as 0. The write value should be 0.	R/W
7	SOSCWUPEN	Sub Oscillation Stop Detection Interrupt Software Standby/Snooze Mode Returns Enable Bit 0: Software Standby/Snooze Mode returns by sub-oscillation stop detection interrupt disabled 1: Software Standby/Snooze Mode returns by sub- oscillation stop detection interrupt enabled	R/W
31:8	—	These bits are read as 0. The write value should be 0.	R/W

Note: If the security attribution is configured as Secure:
- Secure access and Non-secure read access are allowed
- Non-secure write access is ignored, and TrustZone access error is not generated.

If the security attribution is configured as Non-secure:
- Secure and Non-secure access are allowed.

Note: The security attribution of this register is set for each wakeup event.
To avoid the occurrence of a security hole, the target event of a wakeup and the security attribution added to this bit must match.

12.2.20 WUPEN2 : Wake Up Interrupt Enable Register 2

Base address: ICU = 0x4000_6000

Offset address: 0x1A8

Bit position:	31	30	29	28	27	26	25	24	23	22	21	20	19	18	17	16
Bit field:	—	—	—	—	—	—	—	—	—	—	—	—	—	—	—	—
Value after reset:	0	0	0	0	0	0	0	0	0	0	0	0	0	0	0	0

Bit position:	15	14	13	12	11	10	9	8	7	6	5	4	3	2	1	0
Bit field:	—	—	—	—	—	—	—	—	—	EXLVDWUPEN	LVDVRTCWUPEN	EXLVDVBATWUPEN	INTURE1WUPEN	INTUR1WUPEN	INTURE0WUPEN	INTUR0WUPEN
Value after reset:	0	0	0	0	0	0	0	0	0	0	0	0	0	0	0	0

Bit	Symbol	Function	R/W
0	INTUR0WUPEN	UARTA0 Reception Transfer End Interrupt Software Standby/Snooze Mode Returns Enable Bit 0: Software Standby/Snooze Mode returns by UARTA0 reception transfer end interrupt disabled 1: Software Standby/Snooze Mode returns by UARTA0 reception transfer end interrupt enabled	R/W

Bit	Symbol	Function	R/W
1	INTURE0WUPEN	UARTA0 Reception Communication Error Occurrence Interrupt Software Standby/Snooze Mode Returns Enable Bit 0: Software Standby/Snooze Mode returns by UARTA0 reception communication error occurrence interrupt disabled 1: Software Standby/Snooze Mode returns by UARTA0 reception communication error occurrence interrupt enabled	R/W
2	INTUR1WUPEN	UARTA1 Reception Transfer End Interrupt Software Standby/Snooze Mode Returns Enable Bit 0: Software Standby/Snooze Mode returns by UARTA1 reception transfer end interrupt disabled 1: Software Standby/Snooze Mode returns by UARTA1 reception transfer end interrupt enabled	R/W
3	INTURE1WUPEN	UARTA1 Reception Communication Error Occurrence Interrupt Software Standby/Snooze Mode Returns Enable Bit 0: Software Standby/Snooze Mode returns by UARTA1 reception communication error occurrence interrupt disabled 1: Software Standby/Snooze Mode returns by UARTA1 reception communication error occurrence interrupt enabled	R/W
4	EXLVDVBATWUPEN	LVD_EXLVDVBAT Interrupt Software Standby/Snooze Mode Returns Enable Bit 0: Software Standby/Snooze Mode returns by LVD_EXLVDVBAT interrupt disabled 1: Software Standby/Snooze Mode returns by LVD_EXLVDVBAT interrupt enabled	R/W
5	LVDVRTCWUPEN	LVD_VRTC Interrupt Software Standby/Snooze Mode Returns Enable Bit 0: Software Standby/Snooze Mode returns by LVD_VRTC interrupt disabled 1: Software Standby/Snooze Mode returns by LVD_VRTC interrupt enabled	R/W
6	EXLVDWUPEN	LVD_EXLVD Interrupt Software Standby/Snooze Mode Returns Enable Bit 0: Software Standby/Snooze Mode returns by LVD_EXLVD interrupt disabled 1: Software Standby/Snooze Mode returns by LVD_EXLVD interrupt enabled	R/W
31:7	—	These bits are read as 0. The write value should be 0.	R/W

Note: If the security attribution is configured as Secure:

- Secure access and Non-secure read access are allowed.
- Non-secure write access is ignored, and TrustZone access error is not generated.

If the security attribution is configured as Non-secure:

- Secure and Non-secure access are allowed.

12.3 Vector Table

The ICU detects maskable and non-maskable interrupts. Interrupt priorities are set up in the Arm NVIC. For information about these registers, see section 12.9. Reference.

12.3.1 Interrupt Vector Table

Table 12.3 describes the interrupt vector table. The interrupt vector addresses conform to the NVIC specifications.

Table 12.3 Interrupt vector table (1 of 3)

Exception number	IRQ number	Vector offset	Source	Description
0	—	0x000	Arm	Initial stack pointer
1	—	0x004	Arm	Initial program counter (reset vector)
2	—	0x008	Arm	Non-Maskable Interrupt (NMI)
3	—	0x00C	Arm	Hard Fault
4	—	0x010	Arm	MemManage fault
5	—	0x014	Arm	BusFault
6	—	0x018	Arm	UsageFault
7	—	0x01C	Arm	SecureFault

Table 12.3 Interrupt vector table (2 of 3)

Exception number	IRQ number	Vector offset	Source	Description
8	—	0x020	Arm	Reserved
9	—	0x024	Arm	Reserved
10	—	0x028	Arm	Reserved
11	—	0x02C	Arm	Supervisor Call (SVCall)
12	—	0x030	Arm	DebugMonitor
13	—	0x034	Arm	Reserved
14	—	0x038	Arm	Pendable request for system service (PendableSrvReq)
15	—	0x03C	Arm	System Tick Timer (SysTick)
16	0	0x040	ICU.IELSR0	Event selected in the ICU.IELSR0 register
17	1	0x044	ICU.IELSR1	Event selected in the ICU.IELSR1 register
18	2	0x048	ICU.IELSR2	Event selected in the ICU.IELSR2 register
19	3	0x04C	ICU.IELSR3	Event selected in the ICU.IELSR3 register
20	4	0x050	ICU.IELSR4	Event selected in the ICU.IELSR4 register
21	5	0x054	ICU.IELSR5	Event selected in the ICU.IELSR5 register
22	6	0x058	ICU.IELSR6	Event selected in the ICU.IELSR6 register
23	7	0x05C	ICU.IELSR7	Event selected in the ICU.IELSR7 register
24	8	0x060	ICU.IELSR8	Event selected in the ICU.IELSR8 register
25	9	0x064	ICU.IELSR9	Event selected in the ICU.IELSR9 register
26	10	0x068	ICU.IELSR10	Event selected in the ICU.IELSR10 register
27	11	0x06C	ICU.IELSR11	Event selected in the ICU.IELSR11 register
28	12	0x070	ICU.IELSR12	Event selected in the ICU.IELSR12 register
29	13	0x074	ICU.IELSR13	Event selected in the ICU.IELSR13 register
30	14	0x078	ICU.IELSR14	Event selected in the ICU.IELSR14 register
31	15	0x07C	ICU.IELSR15	Event selected in the ICU.IELSR15 register
32	16	0x080	ICU.IELSR16	Event selected in the ICU.IELSR16 register
33	17	0x084	ICU.IELSR17	Event selected in the ICU.IELSR17 register
34	18	0x088	ICU.IELSR18	Event selected in the ICU.IELSR18 register
35	19	0x08C	ICU.IELSR19	Event selected in the ICU.IELSR19 register
36	20	0x090	ICU.IELSR20	Event selected in the ICU.IELSR20 register
37	21	0x094	ICU.IELSR21	Event selected in the ICU.IELSR21 register
38	22	0x098	ICU.IELSR22	Event selected in the ICU.IELSR22 register
39	23	0x09C	ICU.IELSR23	Event selected in the ICU.IELSR23 register
40	24	0x0A0	ICU.IELSR24	Event selected in the ICU.IELSR24 register
41	25	0x0A4	ICU.IELSR25	Event selected in the ICU.IELSR25 register
42	26	0x0A8	ICU.IELSR26	Event selected in the ICU.IELSR26 register
43	27	0x0AC	ICU.IELSR27	Event selected in the ICU.IELSR27 register
44	28	0x0B0	ICU.IELSR28	Event selected in the ICU.IELSR28 register
45	29	0x0B4	ICU.IELSR29	Event selected in the ICU.IELSR29 register
46	30	0x0B8	ICU.IELSR30	Event selected in the ICU.IELSR30 register
47	31	0x0BC	ICU.IELSR31	Event selected in the ICU.IELSR31 register
48	32	0x0C0	ICU.IELSR32	Event selected in the ICU.IELSR32 register

Table 12.3 Interrupt vector table (3 of 3)

Exception number	IRQ number	Vector offset	Source	Description
49	33	0x0C4	ICU.IELSR33	Event selected in the ICU.IELSR33 register
50	34	0x0C8	ICU.IELSR34	Event selected in the ICU.IELSR34 register
51	35	0x0CC	ICU.IELSR35	Event selected in the ICU.IELSR35 register
52	36	0x0D0	ICU.IELSR36	Event selected in the ICU.IELSR36 register
53	37	0x0D4	ICU.IELSR37	Event selected in the ICU.IELSR37 register
54	38	0x0D8	ICU.IELSR38	Event selected in the ICU.IELSR38 register
55	39	0x0DC	ICU.IELSR39	Event selected in the ICU.IELSR39 register
56	40	0x0E0	ICU.IELSR40	Event selected in the ICU.IELSR40 register
57	41	0x0E4	ICU.IELSR41	Event selected in the ICU.IELSR41 register
58	42	0x0E8	ICU.IELSR42	Event selected in the ICU.IELSR42 register
59	43	0x0EC	ICU.IELSR43	Event selected in the ICU.IELSR43 register
60	44	0x0F0	ICU.IELSR44	Event selected in the ICU.IELSR44 register
61	45	0x0F4	ICU.IELSR45	Event selected in the ICU.IELSR45 register
62	46	0x0F8	ICU.IELSR46	Event selected in the ICU.IELSR46 register
63	47	0x0FC	ICU.IELSR47	Event selected in the ICU.IELSR47 register
64	48	0x100	ICU.IELSR48	Event selected in the ICU.IELSR48 register
65	49	0x104	ICU.IELSR49	Event selected in the ICU.IELSR49 register
66	50	0x108	ICU.IELSR50	Event selected in the ICU.IELSR50 register
67	51	0x10C	ICU.IELSR51	Event selected in the ICU.IELSR51 register
68	52	0x110	ICU.IELSR52	Event selected in the ICU.IELSR52 register
69	53	0x114	ICU.IELSR53	Event selected in the ICU.IELSR53 register
70	54	0x118	ICU.IELSR54	Event selected in the ICU.IELSR54 register
71	55	0x11C	ICU.IELSR55	Event selected in the ICU.IELSR55 register
72	56	0x120	ICU.IELSR56	Event selected in the ICU.IELSR56 register
73	57	0x124	ICU.IELSR57	Event selected in the ICU.IELSR57 register
74	58	0x128	ICU.IELSR58	Event selected in the ICU.IELSR58 register
75	59	0x12C	ICU.IELSR59	Event selected in the ICU.IELSR59 register
76	60	0x130	ICU.IELSR60	Event selected in the ICU.IELSR60 register
77	61	0x134	ICU.IELSR61	Event selected in the ICU.IELSR61 register
78	62	0x138	ICU.IELSR62	Event selected in the ICU.IELSR62 register
79	63	0x13C	ICU.IELSR63	Event selected in the ICU.IELSR63 register

12.3.2 Event Number

The following table lists heading details for Table 12.4, which describes each event number.

Heading	Description
Interrupt request source	Name of the source generating the interrupt request
Name	Name of the interrupt
Connect to NVIC	“ ✓” indicates the interrupt can be used as a CPU interrupt
Invoke DTC	“ ✓” indicates the interrupt can be used to request DTC activation
Invoke DMAC	“✓” indicates the interrupt can be used to request DMAC activation

Heading	Description
Canceling Snooze	“ ✓” indicates the interrupt can be used to request a return from Snooze mode
Canceling Software Standby	“ ✓” indicates the interrupt can be used to request a return from Software Standby mode

Table 12.4 Event table (1 of 6)

Event number	Interrupt request source	Name	IELSRn		DELSRn	Canceling Snooze	Canceling Software Standby
			Connect to NVIC	Invoke DTC	Invoke DMAC		
0x001	Port	PORT_IRQ0	✓	✓	✓	✓	✓
0x002		PORT_IRQ1	✓	✓	✓	✓	✓
0x003		PORT_IRQ2	✓	✓	✓	✓	✓
0x004		PORT_IRQ3	✓	✓	✓	✓	✓
0x005		PORT_IRQ4	✓	✓	✓	✓	✓
0x006		PORT_IRQ5	✓	✓	✓	✓	✓
0x007		PORT_IRQ6	✓	✓	✓	✓	✓
0x008		PORT_IRQ7	✓	✓	✓	✓	✓
0x009		PORT_IRQ8	✓	✓	✓	✓	✓
0x00A		PORT_IRQ9	✓	✓	✓	✓	✓
0x00B		PORT_IRQ10	✓	✓	✓	✓	✓
0x00C		PORT_IRQ11	✓	✓	✓	✓	✓
0x00D		PORT_IRQ12	✓	✓	✓	✓	✓
0x00E		PORT_IRQ13	✓	✓	✓	✓	✓
0x00F		PORT_IRQ14	✓	✓	✓	✓	✓
0x010		PORT_IRQ15	✓	✓	✓	✓	✓
0x020	DMAC0	DMAC0_INT	✓	✓	—	—	—
0x021	DMAC1	DMAC1_INT	✓	✓	—	—	—
0x022	DMAC2	DMAC2_INT	✓	✓	—	—	—
0x023	DMAC3	DMAC3_INT	✓	✓	—	—	—
0x024	DMAC4	DMAC4_INT	✓	✓	—	—	—
0x025	DMAC5	DMAC5_INT	✓	✓	—	—	—
0x026	DMAC6	DMAC6_INT	✓	✓	—	—	—
0x027	DMAC7	DMAC7_INT	✓	✓	—	—	—
0x029	DTC	DTC_COMPLETE	✓	—	—	✓*3	—
0x02A		DTC_DTCEND	—	—	—	—	—
0x02B	DMAC/DTC	DMA_TRANSERR	✓	—	—	✓	—
0x02D	ICU	ICU_SNZCANCEL	✓	—	—	✓	—
0x030	FCU	FCU_FIFERR	✓	—	—	—	—
0x031		FCU_FRDYI	✓	—	—	—	—
0x035	LVD	LVD_EXLVDVBAT	✓	—	—	✓	✓
0x036		LVD_VRTC	✓	—	—	✓	✓
0x037		LVD_EXLVD	✓	—	—	✓	✓
0x038		LVD_LVD1	✓	—	—	✓	✓
0x039		LVD_LVD2	✓	—	—	✓	✓
0x03B	MOSC	MOSC_STOP	✓	—	—	—	—

Table 12.4 Event table (2 of 6)

Event number	Interrupt request source	Name	IELSRn		DELSRn	Canceling Snooze	Canceling Software Standby
			Connect to NVIC	Invoke DTC	Invoke DMAC		
0x03C	LPW	SYSTEM_SNZREQ	—	✓	—	—	—
0x03D	SOSC	SOSC_STOP	✓	—	—	✓	✓
0x040	AGT0	AGT0_AGTI	✓	✓	✓	—	—
0x041		AGT0_AGTCMAI	✓	✓	✓	—	—
0x042		AGT0_AGTCMBI	✓	✓	✓	—	—
0x043	AGT1	AGT1_AGTI	✓	✓	✓	✓	✓
0x044		AGT1_AGTCMAI	✓	✓	✓	✓	✓
0x045		AGT1_AGTCMBI	✓	✓	✓	✓	✓
0x052	IWDT	IWDT_NMIUNDF	✓	—	—	✓	✓
0x053	WDT	WDT_NMIUNDF	✓	—	—	—	—
0x054	RTC	RTC_ALM	✓	—	—	✓	✓
0x055		RTC_PRD	✓	—	—	✓	✓
0x056		RTC_CUP	✓	—	—	—	—
0x059	CANFD	CAN_RXF	✓	—	—	—	—
0x05A		CAN_GLERR	✓	—	—	—	—
0x05B		CAN_RF_DMAREQ0	✓	✓	✓	—	—
0x05C		CAN_RF_DMAREQ1	✓	✓	✓	—	—
0x063		CAN0_TX	✓	—	—	—	—
0x064		CAN0_CHERR	✓	—	—	—	—
0x065		CAN0_COMFRX	✓	—	—	—	—
0x066		CAN0_CF_DMAREQ	✓	✓	✓	—	—
0x067		CAN0_RXMB	✓	—	—	—	—
0x073	IIC0	IIC0_RXI	✓	✓	✓	—	—
0x074		IIC0_TXI	✓	✓	✓	—	—
0x075		IIC0_TEI	✓	—	—	—	—
0x076		IIC0_EEI	✓	—	—	—	—
0x077		IIC0_WUI	✓	—	—	✓	✓
0x078	IIC1	IIC1_RXI	✓	✓	✓	—	—
0x079		IIC1_TXI	✓	✓	✓	—	—
0x07A		IIC1_TEI	✓	—	—	—	—
0x07B		IIC1_EEI	✓	—	—	—	—
0x08E	UARTA	UARTA0_TXI	✓	✓	✓	—	—
0x08F		UARTA0_RXI	✓	✓	✓	✓	✓
0x090		UARTA0_ERI	✓	—	—	✓	✓
0x091		UARTA1_TXI	✓	✓	✓	—	—
0x092		UARTA1_RXI	✓	✓	✓	✓	✓
0x093		UARTA1_ERI	✓	—	—	✓	✓
0x09E	CAC	CAC_FERRI	✓	—	—	—	—
0x09F		CAC_MENDI	✓	—	—	—	—
0x0A0		CAC_OVFI	✓	—	—	—	—

Table 12.4 Event table (3 of 6)

Event number	Interrupt request source	Name	IELSRn		DELSRn	Canceling Snooze	Canceling Software Standby
			Connect to NVIC	Invoke DTC	Invoke DMAC		
0x0B1	PORT	IOPORT_GROUP1	✓	✓*1	✓*1	—	—
0x0B2		IOPORT_GROUP2	✓	✓*1	✓*1	—	—
0x0B3		IOPORT_GROUP3	✓	✓*1	✓*1	—	—
0x0B4		IOPORT_GROUP4	✓	✓*1	✓*1	—	—
0x0B5	ELC	ELC_SWEVT0	✓*2	✓	—	—	—
0x0B6		ELC_SWEVT1	✓*2	✓	—	—	—
0x0B7	POEG	POEG_GROUPA	✓	—	—	—	—
0x0B8		POEG_GROUPB	✓	—	—	—	—
0x0B9		POEG_GROUPC	✓	—	—	—	—
0x0BA		POEG_GROUPD	✓	—	—	—	—
0x0C0	GPT0	GPT0_CCMPA	✓	✓	✓	—	—
0x0C1		GPT0_CCMPB	✓	✓	✓	—	—
0x0C2		GPT0_CMPC	✓	✓	✓	—	—
0x0C3		GPT0_CMPD	✓	✓	✓	—	—
0x0C4		GPT0_CMPE	✓	✓	✓	—	—
0x0C5		GPT0_CMPF	✓	✓	✓	—	—
0x0C6		GPT0_OVF	✓	✓	✓	—	—
0x0C7		GPT0_UDF	✓	✓	✓	—	—
0x0C8		GPT0_PC	✓	✓	✓	—	—
0x0C9	GPT1	GPT1_CCMPA	✓	✓	✓	—	—
0x0CA		GPT1_CCMPB	✓	✓	✓	—	—
0x0CB		GPT1_CMPC	✓	✓	✓	—	—
0x0CC		GPT1_CMPD	✓	✓	✓	—	—
0x0CD		GPT1_CMPE	✓	✓	✓	—	—
0x0CE		GPT1_CMPF	✓	✓	✓	—	—
0x0CF		GPT1_OVF	✓	✓	✓	—	—
0x0D0		GPT1_UDF	✓	✓	✓	—	—
0x0D1		GPT1_PC	✓	✓	✓	—	—
0x0D2	GPT2	GPT2_CCMPA	✓	✓	✓	—	—
0x0D3		GPT2_CCMPB	✓	✓	✓	—	—
0x0D4		GPT2_CMPC	✓	✓	✓	—	—
0x0D5		GPT2_CMPD	✓	✓	✓	—	—
0x0D6		GPT2_CMPE	✓	✓	✓	—	—
0x0D7		GPT2_CMPF	✓	✓	✓	—	—
0x0D8		GPT2_OVF	✓	✓	✓	—	—
0x0D9		GPT2_UDF	✓	✓	✓	—	—
0x0DA		GPT2_PC	✓	✓	✓	—	—

Table 12.4 Event table (4 of 6)

Event number	Interrupt request source	Name	IELSRn		DELSRn	Canceling Snooze	Canceling Software Standby
			Connect to NVIC	Invoke DTC	Invoke DMAC		
0x0DB	GPT3	GPT3_CCMPA	✓	✓	✓	—	—
0x0DC		GPT3_CCMPB	✓	✓	✓	—	—
0x0DD		GPT3_CMPC	✓	✓	✓	—	—
0x0DE		GPT3_CMPD	✓	✓	✓	—	—
0x0DF		GPT3_CMPE	✓	✓	✓	—	—
0x0E0		GPT3_CMPF	✓	✓	✓	—	—
0x0E1		GPT3_OVF	✓	✓	✓	—	—
0x0E2		GPT3_UDF	✓	✓	✓	—	—
0x0E3		GPT3_PC	✓	✓	✓	—	—
0x0E4	GPT4	GPT4_CCMPA	✓	✓	✓	—	—
0x0E5		GPT4_CCMPB	✓	✓	✓	—	—
0x0E6		GPT4_CMPC	✓	✓	✓	—	—
0x0E7		GPT4_CMPD	✓	✓	✓	—	—
0x0E8		GPT4_CMPE	✓	✓	✓	—	—
0x0E9		GPT4_CMPF	✓	✓	✓	—	—
0x0EA		GPT4_OVF	✓	✓	✓	—	—
0x0EB		GPT4_UDF	✓	✓	✓	—	—
0x0EC		GPT4_PC	✓	✓	✓	—	—
0x0ED	GPT5	GPT5_CCMPA	✓	✓	✓	—	—
0x0EE		GPT5_CCMPB	✓	✓	✓	—	—
0x0EF		GPT5_CMPC	✓	✓	✓	—	—
0x0F0		GPT5_CMPD	✓	✓	✓	—	—
0x0F1		GPT5_CMPE	✓	✓	✓	—	—
0x0F2		GPT5_CMPF	✓	✓	✓	—	—
0x0F3		GPT5_OVF	✓	✓	✓	—	—
0x0F4		GPT5_UDF	✓	✓	✓	—	—
0x150	GPT	GPT_UVWEDGE	✓	—	—	—	—
0x160	ADC120	ADC120_ADI	✓	✓	✓	—	—
0x161		ADC120_GBADI	✓	✓	✓	—	—
0x162		ADC120_CMPAI	✓	—	—	—	—
0x163		ADC120_CMPBI	✓	—	—	—	—
0x164		ADC120_WCMPM	—	✓	✓	✓*3	—
0x165		ADC120_WCMPUM	—	✓	✓	✓*3	—
0x180	SCI0	SCI0_RXI	✓	✓	✓	—	—
0x181		SCI0_TXI	✓	✓	✓	—	—
0x182		SCI0_TEI	✓	—	—	—	—
0x183		SCI0_ERI	✓	—	—	—	—
0x184		SCI0_AM	✓	—	—	✓*1	—
0x185		SCI0_RXI_OR_ERI	—	—	—	✓*1	—

Table 12.4 Event table (5 of 6)

Event number	Interrupt request source	Name	IELSRn		DELSRn	Canceling Snooze	Canceling Software Standby
			Connect to NVIC	Invoke DTC	Invoke DMAC		
0x186	SCI1	SCI1_RXI	✓	✓	✓	—	—
0x187		SCI1_TXI	✓	✓	✓	—	—
0x188		SCI1_TEI	✓	—	—	—	—
0x189		SCI1_ERI	✓	—	—	—	—
0x192	SCI3	SCI3_RXI	✓	✓	✓	—	—
0x193		SCI3_TXI	✓	✓	✓	—	—
0x194		SCI3_TEI	✓	—	—	—	—
0x195		SCI3_ERI	✓	—	—	—	—
0x196		SCI3_AM	✓	—	—	—	—
0x198	SCI4	SCI4_RXI	✓	✓	✓	—	—
0x199		SCI4_TXI	✓	✓	✓	—	—
0x19A		SCI4_TEI	✓	—	—	—	—
0x19B		SCI4_ERI	✓	—	—	—	—
0x19C		SCI4_AM	✓	—	—	—	—
0x19E	SCI5	SCI5_RXI	✓	✓	✓	—	—
0x19F		SCI5_TXI	✓	✓	✓	—	—
0x1A0		SCI5_TEI	✓	—	—	—	—
0x1A1		SCI5_ERI	✓	—	—	—	—
0x1A2		SCI5_AM	✓	—	—	—	—
0x1B6	SCI9	SCI9_RXI	✓	✓	✓	—	—
0x1B7		SCI9_TXI	✓	✓	✓	—	—
0x1B8		SCI9_TEI	✓	—	—	—	—
0x1B9		SCI9_ERI	✓	—	—	—	—
0x1BA		SCI9_AM	✓	—	—	—	—
0x1BC	SCIX0[*4]	SCIX0_SCIX0	✓	—	—	—	—
0x1BD		SCIX0_SCIX1	✓	—	—	—	—
0x1BE		SCIX0_SCIX2	✓	—	—	—	—
0x1BF		SCIX0_SCIX3	✓	—	—	—	—
0x1C4	SPI0	SPI0_SPRI	✓	✓	✓	—	—
0x1C5		SPI0_SPTI	✓	✓	✓	—	—
0x1C6		SPI0_SPII	✓	—	—	—	—
0x1C7		SPI0_SPEI	✓	—	—	—	—
0x1C8		SPI0_SPCEND	✓	—	—	—	—
0x1C9	SPI1	SPI1_SPRI	✓	✓	✓	—	—
0x1CA		SPI1_SPTI	✓	✓	✓	—	—
0x1CB		SPI1_SPII	✓	—	—	—	—
0x1CC		SPI1_SPEI	✓	—	—	—	—
0x1CD		SPI1_SPCEND	✓	—	—	—	—
0x1D0	CANFD ECC	CAN_MRAM_ERI	✓	—	—	—	—

Table 12.4 Event table (6 of 6)

Event number	Interrupt request source	Name	IELSRn		DELSRn	Canceling Snooze	Canceling Software Standby
			Connect to NVIC	Invoke DTC	Invoke DMAC		
0x1D1	SPI2	SPI2_SPRI	✓	✓	✓	—	—
0x1D2		SPI2_SPTI	✓	✓	✓	—	—
0x1D3		SPI2_SPII	✓	—	—	—	—
0x1D4		SPI2_SPEI	✓	—	—	—	—
0x1D5		SPI2_SPCEND	✓	—	—	—	—
0x1DA	QSPI	QSPI_INTR	✓	—	—	—	—
0x1DB	DOC	DOC_DOPCI	✓	—	—	✓*3	—
0x1EE	RSIP-E31A	RSIP_TADI	✓	—	—	—	—

Note 1. Only the first edge detection is valid.
Note 2. Only interrupts after DTC transfer are supported.
Note 3. Using SELSR0.
Note 4. SCIX0_SCIXn (n = 0 to 3) links to Simple LIN interface of SCI1.

12.4 Interrupt Operation

The ICU performs the following functions:

- Detecting interrupts
- Enabling and disabling interrupts
- Selecting interrupt request destinations such as CPU interrupt, DTC activation, or DMAC activation.

12.4.1 Detecting Interrupts

The ICU selects an event source input from a peripheral function interrupt or an external pin interrupt with IELSRn.IELS [8:0].

The accepted interrupt source sets the IELSRn.IR to 1 and sends an interrupt request to the NVIC.

External pin interrupt requests are detected by either:

- Edges (falling edge, rising edge, or rising and falling edges)
- Level (low level) of the interrupt signal.

Set the IRQCRi.IRQMD[1:0] bits to select the detection mode for the IRQi pins. For interrupt sources associated with peripheral modules, see Table 12.3 and Table 12.4. Events must be accepted by the NVIC before an interrupt occurs and is accepted by the CPU.

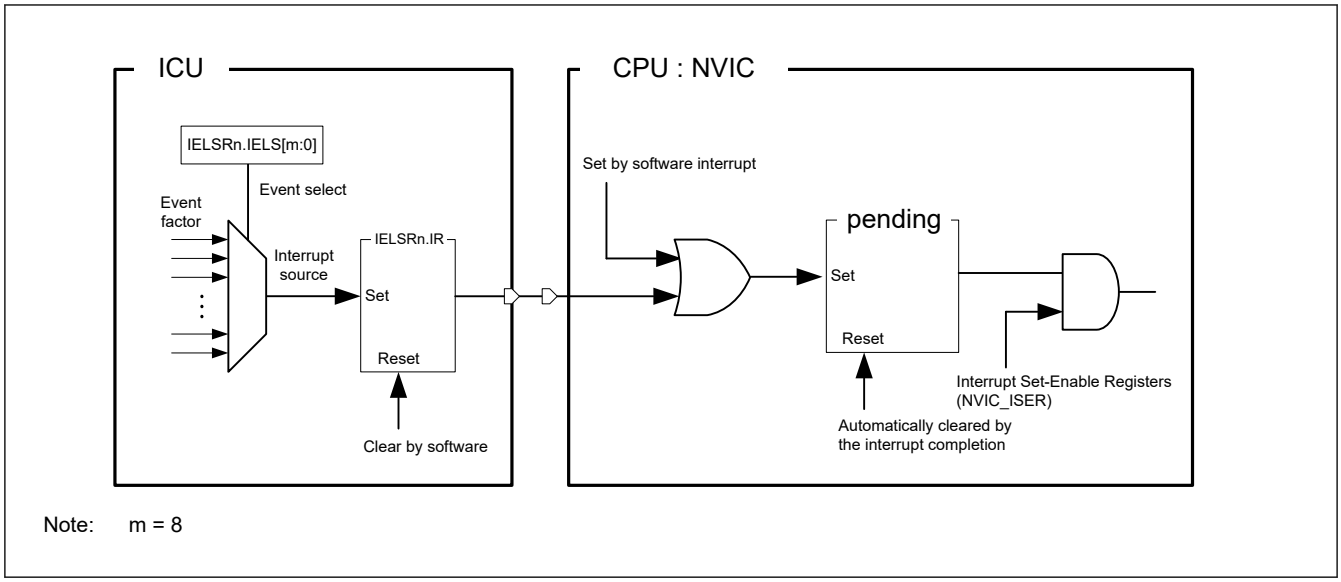

Figure 12.2 Interrupt path of the ICU and CPU (NVIC)

12.5 Interrupt Setting Procedure

12.5.1 Enabling Interrupt Requests

The procedure for enabling an interrupt request is as follows:

1. Set the Interrupt Set-Enable register (NVIC_ISER).
2. Set the IELSRn.IELS[8:0] bits as the interrupt source.
3. Specify the operation settings for the event source, such as DMAC activation (DELSRn.DELS[8:0]), snooze mode cancellation (SELSR0.SELS[8:0]), software standby mode cancellation (WUPEN register setting).

12.5.2 Disabling Interrupt Requests

The procedure to disable the interrupt request is as follows:

1. Disable the operation settings for the event source, such as DMAC activation (DELSRn.DELS[8:0]), snooze mode cancellation (SELSR0.SELS[8:0]), software standby mode cancellation (WUPEN register setting).
2. Clear the interrupt source setting (IELSRn.IELS[8:0] = 0x00).
3. Clear the interrupt status flag (IELSRn.IR = 0).
4. Clear the interrupt Clear-Enable register (NVIC_ICER) and interrupt Clear-Pending register (NVIC_ICPR).

12.5.3 Polling for Interrupts

The procedure for polling for interrupt requests is as follows:

1. Set the Interrupt Clear-Enable register (NVIC_ICER).
2. Set the IELSRn.IELS[8:0] bits as the interrupt source.
3. Specify the operation settings for the event source, such as DMAC activation (DELSRn.DELS[8:0]), snooze mode cancellation (SELSR0.SELS[8:0]), software standby mode cancellation (WUPEN register setting).
4. Poll the interrupt Set-Pending register (NVIC_ISPR).

12.5.4 Selecting Interrupt Request Destinations

The available destinations are fixed for each interrupt, as described in Table 12.3, Table 12.4.

The interrupt output destination, CPU, DMAC, or DTC can be independently selected for each interrupt source.

Use an interrupt request destination setting that is indicated by a "✓" in the event list (see section 12.3.2. Event Number).

Note: Setting the same interrupt source for IELSRn and DELSRn is prohibited.

If the DMAC or DTC is selected as the destination for requests from an IRQi pin, set the IRQCRi.IRQMD[1:0] bits for that interrupt to select edge detection.

12.5.4.1 CPU Interrupt Request

When IELSRn.DTCE = 0, the event specified in the IELSRn register is output to the NVIC. Set the IELSRn.IELS[8:0] bits to the target event and set the IELSRn.DTCE bit to 0.

12.5.4.2 DTC Activation

When IELSRn.DTCE = 1, the event specified in the IELSRn register is output to the DTC. Use the following procedure:

1. Set the IELSRn.IELS[8:0] bits to the target event and set the IELSRn.DTCE bit to 1.
2. Set the DTC Module Start bit (DTCST.DTCST) to 1.

Table 12.5 shows operation when the DTC is the interrupt request destination.

Table 12.5 Operation when DTC becomes interrupt request destination

Interrupt request destination	DISEL*1	Remaining transfer operations	Operation per request	IR*2	Interrupt request destination after transfer
DTC*3	1	≠ 0	DTC transfer → CPU interrupt	Cleared on interrupt acceptance by the CPU	DTC
		= 0	DTC transfer → CPU interrupt	Cleared on interrupt acceptance by the CPU	CPU (IELSRn.DTCE bit is automatically cleared)
	0	≠ 0	DTC transfer	Cleared at the start of DTC data transfer after reading DTC transfer data	DTC
		= 0	DTC transfer → CPU interrupt	Cleared on interrupt acceptance by the CPU	CPU (IELSRn.DTCE bit is automatically cleared)

Note 1. DTC.MRB.DISEL bit controls the interrupt generates timing from DTC to CPU.
Note 2. When the IELSRn.IR flag is 1, an interrupt request (DTC activation request) that occurs again is ignored.
Note 3. For chain transfers, DTC transfer continues until the last chain transfer ends. The DISEL bit state and the remaining transfer count determine whether a CPU interrupt occurs, the IELSRn.IR flag clear timing, and the interrupt request destination after transfer. See Table 16.2 in section 16, Data Transfer Controller (DTC).

Note: Error during DTC transfer

If an error response occurs during DTC transfer, the DTC notifies the ICU that an error has occurred. ICU clears all bits of the target IELSRn (n = 0 to 63). IELSRn that is not the target is not cleared.

Note: DTC transfer error in Snooze mode

When an error occurs in DTC transfer in Snooze mode, the ICU issues a wakeup request. However, interrupt requests are not issued automatically. See section 16, Data Transfer Controller (DTC) for information on how to set the interrupt when a DTC error occurs.

12.5.4.3 DMAC Activation

Events specified in the DELSRn registers are output to the DMAC.

To set the interrupt source for DMAC, use the following procedure:

1. Set the DELSRn.DELS[8:0] bits to the event to activate the DMAC.
2. When using interrupts to CPU, set the IELSRn.IELS bit to factor of DMAC interrupt and IELSRn.DTCE bit to 0.
3. Set the activation source for the target DMAC channel (DMACm.DMTMD.DCTG[1:0]) to 01b (interrupt module detection).
4. Set the DMAC transfer enable bit for the target DMAC channel (DMACm.DMCNT.DTE) to 1.
5. Set the DMAC operation enable bit (DMAST.DMST) to 1.

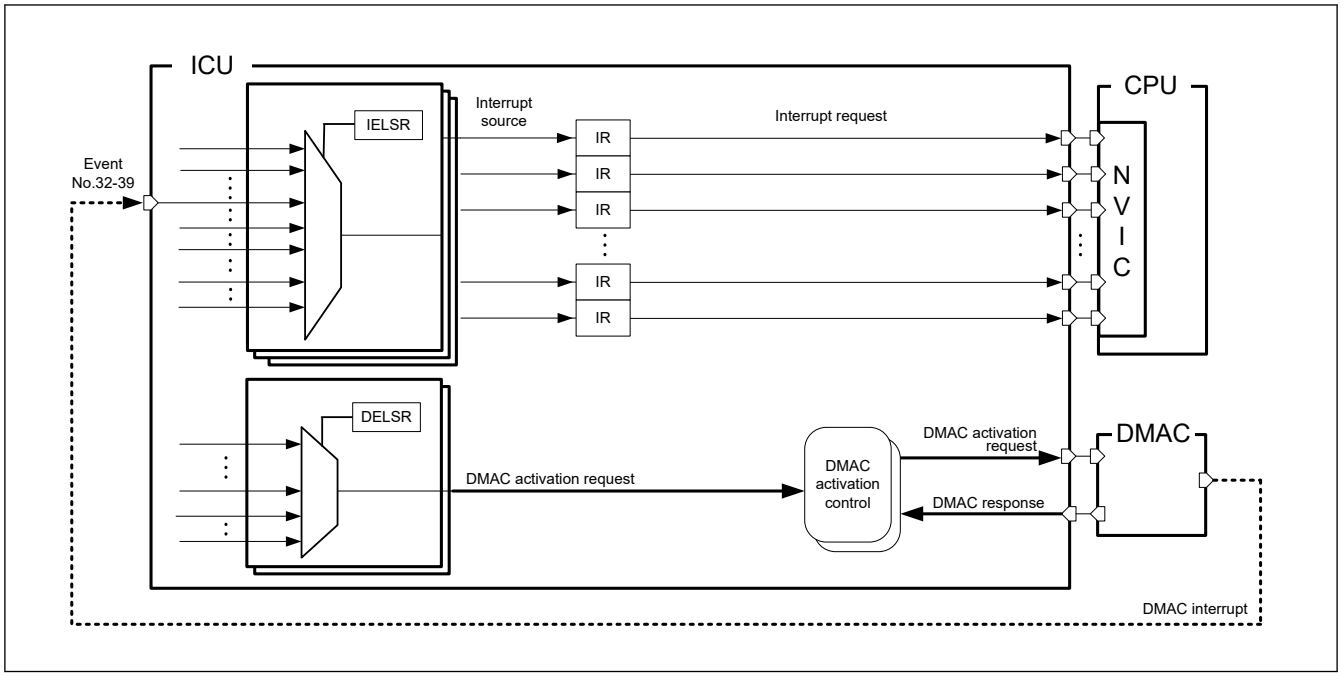

Figure 12.3 DMAC request trigger and interrupt path

Note: Error during DMAC transfer

If an error response occurs during DMAC transfer, the DMAC notifies the ICU that an error has occurred.

The ICU clears all bits of the target channel of DELSRn (n = 0 to 7). DELSRn that is not the target channel is not cleared.

12.5.5 Digital Filter

A digital filter function is provided for the external interrupt request pins IRQi, (i = 0 to 15) and the NMI pin interrupt. It samples input signals on the filter PCLKB sampling clock and removes any signal with a pulse width less than 3 sampling cycles.

To use the digital filter for an IRQi pin:

1. Set the sampling clock cycle to PCLKB, PCLKB/8, PCLKB/32, PCLKB/64 or LOCO in the IRQCRi.FCLKSEL[1:0] bits and IRQCRi.LOCOSEL bit (i = 0 to 15).
2. Set the IRQCRi.FLTEN bit (i = 0 to 15) to 1 (digital filter enabled).

If LOCO is selected as the sampling clock for the digital filter, note the following:

- Once the IRQ pin is set, the IELSR register should be set to 4 cycles after the LOCO clock
- IRQMD[1:0] bits should not be set to 11b
- The digital filter settings (IRQCRi.FLTEN = 1 and IRQCRi.LOCOSEL = 1) should not be changed
- LOCO should not be stopped.

To use the digital filter for an NMI pin:

1. Set the sampling clock cycle to PCLKB, PCLKB/8, PCLKB/32, or PCLKB/64 in the NMICR.NFCLKSEL[1:0] bits.
2. Set the NMICR.NFLTEN bit to 1 (digital filter enabled).

Figure 12.4 shows an example of digital filter operation.

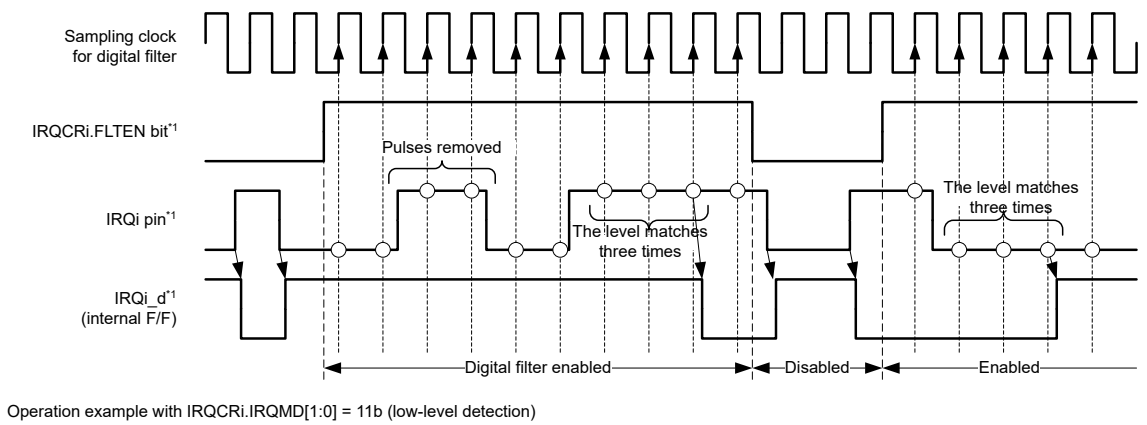

Note 1. i = 0 to 7

Figure 12.4 Digital filter operation example

Before entering Software Standby mode, disable the digital filters by clearing the IRQCRi.FLTEN if the sampling clock is not LOCO. NMI does not select LOCO, so be sure to clear the NMICR.NFLTEN bit to disable the digital filter. The ICU clock stops in Software Standby mode.

On exiting Software Standby mode, the circuit detects the edge by comparing the state before standby to the state after standby release. If the input changes during Software Standby mode, an incorrect edge might be detected. The digital filters can be enabled again after exiting Software Standby mode.

12.5.6 External Pin Interrupts

To use external pin interrupts:

1. Configure I/O ports settings.
2. Clear the IRQCRi.FLTEN bit (i = 0 to 15) to 0 (digital filter disabled).
3. Set the IRQMD[1:0] bits and the LOCOSEL bit of the given IRQCRi register (i = 0 to 15) to select the senses of detection.
4. Set the FCLKSEL[1:0] bits, and the FLTEN bit of the IRQCRi register.
5. Select the IRQ pin as follows:
   - If the IRQ pin is to be used for CPU interrupt requests, set the IELSRn.IELS[8:0] bits and the IELSRn.DTCE bit to 0.
   - If the IRQ pin is to be used for DTC activation, set the IELSRn.IELS[8:0] bits and the IELSRn.DTCE bit to 1.
   - If the IRQ pin is to be used for DMAC activation, set the DELSRn.DELS[8:0] bits.

12.6 Non-Maskable Interrupt Operation

The following sources can trigger a non-maskable interrupt:

- NMI pin interrupt
- Oscillation stop detection interrupt
- WDT underflow/refresh error interrupt
- IWDT underflow/refresh error interrupt
- Voltage monitor 1 interrupt
- Voltage monitor 2 interrupt

- SRAM parity error interrupt
- SRAM ECC error interrupt
- Bus master MPU error interrupt
- TrustZone filter error interrupt
- Cache RAM parity error interrupt

Non-maskable interrupts can only be used with the CPU, not to activate the DTC or DMAC. Non-maskable interrupts take precedence over all other interrupts. The non-maskable interrupt states can be verified in the Non-Maskable Interrupt Status Register (NMISR). Confirm that all bits in the NMISR are 0 before returning from the NMI handler.

Non-maskable interrupts are disabled by default. To use non-maskable interrupts:

1. Clear the NMICR.NFLTEN bit to 0 (digital filter disabled).
2. Set the NMIMD bit, NFCLKSEL[1:0] bits, and NFLTEN bit of NMICR register.
3. Write 1 to the NMICLR.NMICLR bit to clear the NMISR.NMIST flag to 0.
4. Enable the non-maskable interrupt by writing 1 to the associated bit in the Non-Maskable Interrupt Enable Register (NMIER).

After 1 is written to the NMIER register, subsequent write access to the NMIEN bit in NMIER is ignored. An NMI cannot be disabled when enabled, except by a reset.

The secure attribution managed within the Application Interrupt and Reset Control Register (AIRCR) of the Arm CPU must match the security attribution of NMI.

The NMI secure of the CPU is changed by AIRCR.BFHFNMINS. It is managed by software developers who manage secure program.

12.6.1 Correspondence to TrustZone-M by NMI

The NMI security is set by AIRCR.BFHFNMINS. Although there is only one NMI per CPU, multiple factors can be set. This section describes the procedure for mixing secure and non-secure programs of NMI. When doing so, the NMI-related registers of the ICU are set to secure.

NMI-related registers:

- NMIER
- NMICLR
- NMICR

Set the ICUSARB.SANMI bit to 0.

The value of AIRCR.BFHFNMINS[13] in the Application Interrupt and Reset Control Register of the ARM CPU must be the same as the value of security attribution. The initial values of AIRCR.BFHFNMINS and ICUSARB.SANMI are different.

AIRCR.BFHFNMINS is for secure and ICUSARB.SANMI is for non-secure. Polarity has the same meaning so program these to match.

If NMI is issued, jump to the NMI handler. When mixing secure and non-secure program, the NMI handler must branch according to the TrustZone-M rule. Figure 12.5 shows the flow.

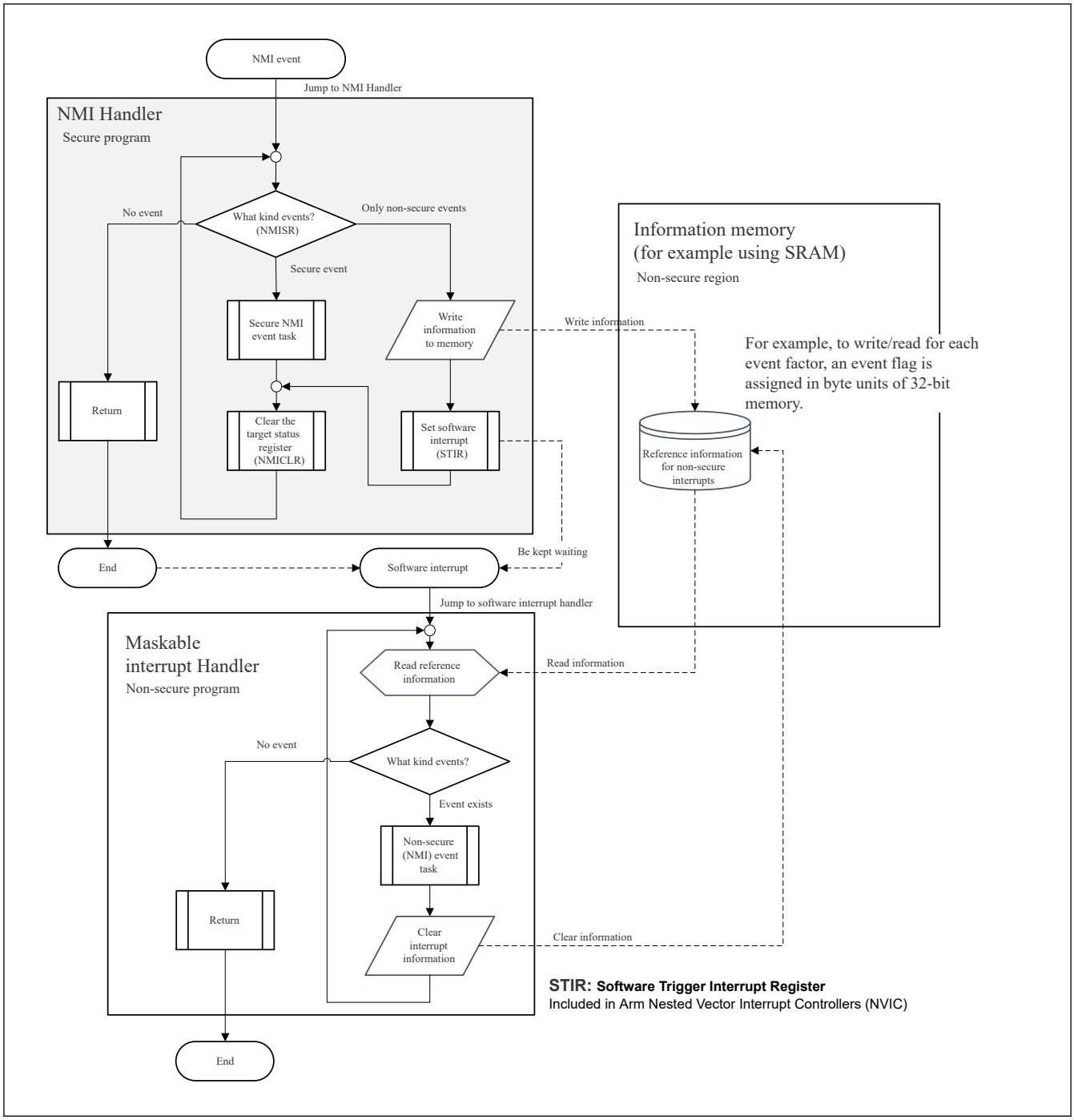

Figure 12.5 Correspondence to TrustZone-M by NMI

See the Arm documentation for details on how to move between secure and non-secure programs.

12.7 Return from Low Power Modes

Table 12.4 lists the interrupt sources that can be used to exit Sleep, Snooze, or Software Standby mode. For more information, see section 10, Low Power Modes.

12.7.1 Return from Sleep Mode

To return from Sleep mode in response to an interrupt:

non-maskable interrupt

- Use the NMIER register to enable the target interrupt request.

maskable interrupt

- Select the CPU as the interrupt request destination.
- Enable the interrupt in the NVIC.

12.7.2 Return from Software Standby Mode

The ICU returns from Software Standby mode using a non-maskable interrupt or a maskable interrupt. For maskable interrupt of canceling source, see Table 12.4.

To return from Software Standby mode:

1. Select the interrupt source that enables return from Software Standby:
   - For non-maskable interrupts, use the NMIER register to enable the target interrupt request
   - For maskable interrupts, use the WUPEN register to enable the target interrupt request.
2. Select the CPU as the interrupt request destination
3. Enable the interrupt in the NVIC.

Interrupt requests through the IRQn pins that do not satisfy these conditions are not detected while the clock is stopped in Software Standby mode.

Similarly, request for a non-maskable interrupt from a request source whose clock is stopped in Software Standby mode cannot be detected.

Transition to/from Software Standby mode

1. Before Software Standby mode is entered, disable the digital filter for the interrupt source as a return target (IRQCRi.FLTEN = 0, NMICR.NFLTEN = 0).
2. To use the digital filter again after returning from Software Standby mode, enable the digital filter (IRQCRi.FLTEN = 1, NMICR.NFLTEN = 1).

12.7.3 Return from Snooze Mode

The ICU can return to Normal mode from Snooze mode using the interrupts provided for this mode.

To return to Normal mode from Snooze mode:

1. Set the number of the required interrupt request in SELSR0.SELS[8:0]
2. Set the value 0x02D (ICU_SNZCANCEL) in IELSRn.IELS[8:0] (n = 0 to 63).
3. Select the CPU as the interrupt request destination.
4. Enable the interrupt in the NVIC.

Interrupt requests through the non-maskable that do not satisfy the above conditions are not detected while the clock is stopped in Snooze mode.

Note: In Snooze mode, a clock is supplied to the ICU. If an event selected in IELSRn is detected, the CPU acknowledges the interrupt after returning to Normal mode from Software Standby mode. If an event selected in DELSRn is detected, the DMAC can acknowledge the interrupt after returning to Normal mode from Software Standby mode.

12.8 Using the WFI Instruction with Non-Maskable Interrupts

Whenever a WFI instruction is executed, confirm that all status flags in the NMISR register are 0.

12.9 Reference

- ARM Limited., ARM® Cortex®-M33 Processor Technical Reference Manual (ARM 100230).

13. Buses

13.1 Overview

The buses consists of 32 bits AHB bus matrix. Table 13.1 lists the bus masters and bus slaves and Figure 13.1 shows the bus configuration.

Table 13.1 Bus specifications

Classification	Bus Master/Slave name	Sync Clock	Specifications
Bus Masters	Code bus (Cortex-M33)	ICLK	Connected to the CPU Instruction Cache for instructions and operands
	System bus (Cortex-M33)	ICLK	Connected to the CPU Data Cache for system
	DMAC / DTC	ICLK	Connected to the DMAC/DTC
Bus Slaves	FHBIU	ICLK	Connected to Code Flash memory and Configuration area
	FLBIU	FCLK	Connected to Data Flash memory, FACI, and TSN
	S0BIU	ICLK	Connected to SRAM0
	PSBIU	ICLK	Connected to peripheral system modules (DTC, DMAC, ICU, Flash, MPU, SRAM, Debug/Trace module, System controller and BUS controller) Connected to peripheral modules (I/O ports)
	PLBIU	PCLKB	Connected to peripheral modules (CAC, ELC, POEG, RTC, WDT, IWDT, AGT, IIC, CANFD, SLCDC, UARTA, and RSIP-E31A)
	PHBIU	PCLKA	Connected to peripheral modules (GPT, SCI, SPI, CRC, DOC, ADC12, CNECC, and IrDA)
	EQBIU (QSPI area)	PCLKA	Connected to the QSPI (External Memory Interface)

Note: FHBIU: Flash High speed Bus Interface Unit.
FLBIU: Flash Low speed Bus Interface Unit.
S0BIU: SRAM0 Bus Interface Unit.
PSBIU: Peripheral System Bus Interface Unit.
PLBIU: Peripheral Low speed Bus Interface Unit.
PHBIU: Peripheral High speed Bus Interface Unit.
EQBIU: External memory interface QSPI Bus Interface Unit.

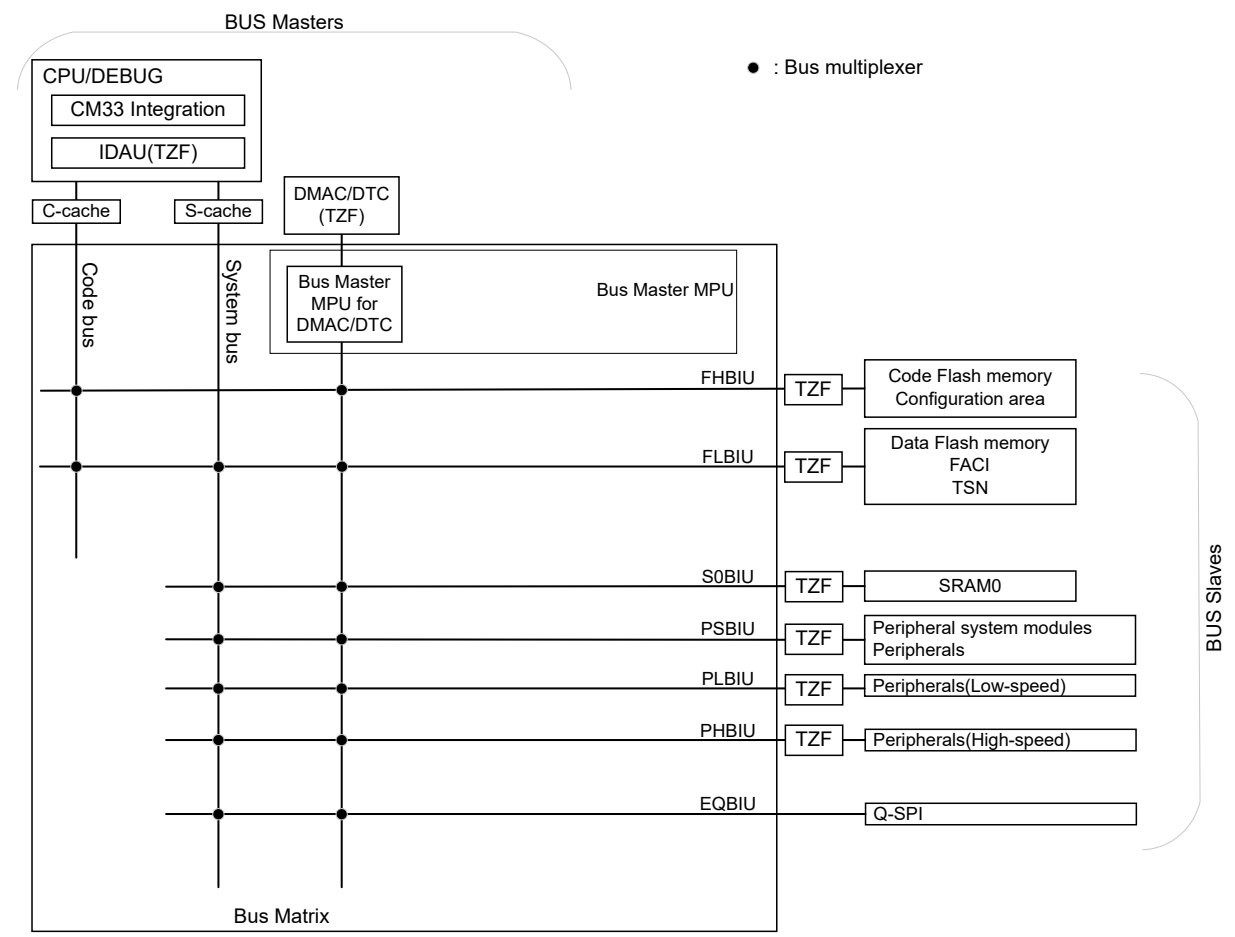

Note: TZF is TrustZone Filter. C-cache is instruction cache. S-cache is data cache.
For FLBIU, the code bus accesses the data flash memory and configuration areas (code region) through FLBIU. The system bus accesses FACI (peripheral region) through FLBIU.

Figure 13.1 Bus connection

13.2 Description of Buses

13.2.1 Arbitration

For arbitration between masters in each slave, fixed-priority and round-robin methods can be selected for each master. For details, see section 13.3.3. BUSSCNT<slave> : Slave Bus Control Register (<slave> = FHBIU, FLBIU, S0BIU, EQBIU), section 13.3.4. BUSSCNT<slave> : Slave Bus Control Register (<slave> = PSBIU, PLBIU, PHBIU).

13.2.2 Parallel Operation

Parallel operation is possible when different bus-master modules are requesting access to different slave modules. For example, if the CPU is fetching an instruction from Code Flash and an operand from SRAM0, the DMAC can handle transfer between a peripheral module at the same time.

Figure 13.2 shows an example of parallel operations. In this example, the CPU uses code bus and system bus for simultaneous access to FHBIU and S0BIU, respectively. Furthermore, the DMAC/DTC simultaneously accesses the peripheral bus during access to FHBIU and S0BIU by the CPU.

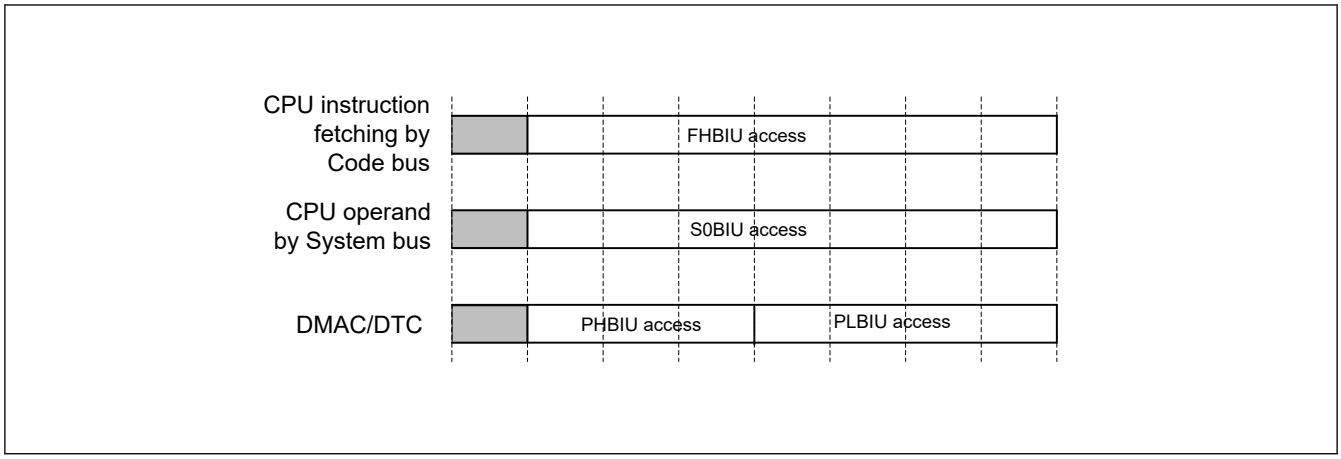

Figure 13.2 Example of parallel operations

13.2.3 Restrictions

(1) Restriction on endian

Memory space must be little-endian in order to execute Cortex® code.

(2) Bufferable write access

When CPU perform bufferable write access to PLBIU or PHBIU, if an STZF error occurs then the error response is invalidated. Therefore, no error flag is set and no NMI/RESET request is generated.

When CPU performs bufferable write access to PHBIU, if a Slave bus error occurs then the error response becomes invalid and the error flag is not set.

If error response is required, set the bus master to non-bufferable access.

(3) Access to reserved area of FLBIU and S0BIU

Access to the reserved area of FLBIU and S0BIU is prohibited. Operation is not guaranteed if accessed.

13.3 Register Descriptions

13.3.1 BUSSARA : BUS Security Attribution Register A

Base address: CPSCU = 0x4000_8000

Offset address: 0x0100

Bit position:	31	30	29	28	27	26	25	24	23	22	21	20	19	18	17	16
Bit field:	—	—	—	—	—	—	—	—	—	—	—	—	—	—	—	—
Value after reset:	1	1	1	1	1	1	1	1	1	1	1	1	1	1	1	1

Bit position:	15	14	13	12	11	10	9	8	7	6	5	4	3	2	1	0
Bit field:	—	—	—	—	—	—	—	—	—	—	—	—	—	—	—	BUSSA0
Value after reset:	1	1	1	1	1	1	1	1	1	1	1	1	1	1	1	1

Bit	Symbol	Function	R/W
0	BUSSA0	BUS Security Attribution A0 0: Secure 1: Non-Secure	R/W
31:1	—	These bits are read as 1.	R

Note: Only Secure access can write to this register. Both Secure access and Non-secure read access are allowed but Non-secure write access is not allowed and TrustZone access error is not generated.

Note: This register is write-protected by PRCR register.

BUSSA0 bit (BUS Security Attribution A0)

The correspondence between register and BIU name is as follows:

Connection (BUSSCNT<slave> = FHBIU/FLBIU/S0BIU/PSBIU/PLBIU/PHBIU/EQBIU)

See to Figure 13.1 for connection between BIU and BUS.

- BUSSCNTFHBIU
- BUSSCNTFLBIU
- BUSSCNTS0BIU
- BUSSCNTPSBIU
- BUSSCNTPLBIU
- BUSSCNTPHBIU
- BUSSCNTEQBIU

13.3.2 BUSSARB : BUS Security Attribution Register B

Base address: CPSCU = 0x4000_8000

Offset address: 0x0104

Bit position:	31	30	29	28	27	26	25	24	23	22	21	20	19	18	17	16
Bit field:	—	—	—	—	—	—	—	—	—	—	—	—	—	—	—	—
Value after reset:	1	1	1	1	1	1	1	1	1	1	1	1	1	1	1	1

Bit position:	15	14	13	12	11	10	9	8	7	6	5	4	3	2	1	0
Bit field:	—	—	—	—	—	—	—	—	—	—	—	—	—	—	—	BUSSB0
Value after reset:	1	1	1	1	1	1	1	1	1	1	1	1	1	1	1	1

Bit	Symbol	Function	R/W
0	BUSSB0	BUS Security Attribution B0 0: Secure 1: Non-secure	R/W
31:1	—	These bits are read as 1.	R

Note: Only Secure access can write to this register. Both Secure access and Non-secure read access are allowed but Non-secure write access is not allowed and TrustZone access error is not generated.

Note: This register is write-protected by PRCR register.

BUSSB0 bit (BUS Security Attribution B0)

The BUSSB0 bit specifies the security attributes of registers for Bus Error Clear registers and DMAC/DTC Error Clear register.

BUS1ERRCLR: Code bus

BUS2ERRCLR: System bus

BUS3ERRCLR: DMAC/DTC

DMACDTCERRCLR: DMAC/DTC (Master-TZF)

See Figure 13.1 for connection of each bus.

13.3.3 BUSSCNT<slave> : Slave Bus Control Register (<slave> = FHBIU, FLBIU, S0BIU, EQBIU)

Base address: BUS = 0x4000_3000

Offset address: 0x1100 (BUSSCNTFHBIU)
0x1104 (BUSSCNTFLBIU)
0x1110 (BUSSCNTS0BIU)
0x1140 (BUSSCNTEQBIU)

Bit position:	15	14	13	12	11	10	9	8	7	6	5	4	3	2	1	0
Bit field:	—	—	—	—	—	—	—	—	—	—	—	—	—	—	ARBS[1:0]	
Value after reset:	0	0	0	0	0	0	0	0	0	0	0	0	0	0	0	0

Bit	Symbol	Function	R/W
1:0	ARBS[1:0]	Arbitration Select for two masters Specify the priority between bus master. > : Fixed Priority ↔: Round-Robin 0 0: DMAC/DTC > CPU 0 1: DMAC/DTC ↔ CPU 1 0: Setting prohibited 1 1: Setting prohibited	R/W
15:2	—	These bits are read as 0. The write value should be 0.	R/W

Note: If the security attribution is configured as Secure:
- Secure access and Non-secure read access are allowed
- Non-secure write access is ignored, and TrustZone access error is not generated.

If the security attribution is configured as Non-secure:
- Secure and Non-secure access are allowed.

Note:
- BUSSCNT<slave> : <slave> is bus interface unit name for Slave
- The change is prohibited from initial value (0) to reserved bit. Operation when changing is not guaranteed.

ARBS[1:0] bits (Arbitration Select for two masters)

The ARBS bits sets the arbitration method of each master.

13.3.4 BUSSCNT<slave> : Slave Bus Control Register (<slave> = PSBIU, PLBIU, PHBIU)

Base address: BUS = 0x4000_3000

Offset address: 0x1120 (BUSSCNTPSBIU)
0x1130 (BUSSCNTPLBIU)
0x1134 (BUSSCNTPHBIU)

Bit position:	15	14	13	12	11	10	9	8	7	6	5	4	3	2	1	0
Bit field:	—	—	—	—	—	—	—	—	—	—	—	—	—	—	—	ARBS
Value after reset:	0	0	0	0	0	0	0	0	0	0	0	0	0	0	0	0

Bit	Symbol	Function	R/W
0	ARBS	Arbitration Select for two masters Specify the priority between bus master. > : Fixed Priority ↔: Round-Robin 0: DMAC/DTC > CPU 1: DMAC/DTC ↔ CPU	R/W
15:1	—	These bits are read as 0. The write value should be 0.	R/W

Note: If the security attribution is configured as Secure:
- Secure access and Non-secure read access are allowed
- Non-secure write access is ignored, and TrustZone access error is not generated.

If the security attribution is configured as Non-secure:
- Secure and Non-secure access are allowed.

Note:
- BUSSCNT<slave> : <slave> is bus interface unit name for Slave

- The change is prohibited from initial value (0) to reserved bit. Operation when changing is not guaranteed.

ARBS bit (Arbitration Select for two masters)

The ARBS bits sets the arbitration method of each master.

13.3.5 BUSnERRADD : BUS Error Address Register (n = 1 to 3)

Base address: BUS = 0x4000_3000

Offset address: 0x1800 + 0x10 × (n - 1)

Bit position:	31																															0
Bit field:	BERAD[31:0]																															
Value after reset:	0	0	0	0	0	0	0	0	0	0	0	0	0	0	0	0	0	0	0	0	0	0	0	0	0	0	0	0	0	0	0	0

Bit	Symbol	Function	R/W
31:0	BERAD[31:0]	Bus Error Address When a bus error occurs, these bits store the error address	R

This register is cleared by reset other than MPU- and TZF-related resets which are Bus Master MPU Error Reset and TrustZone Filter Error Reset.

For detail of MPU- and TZF-related resets, see section 5, Resets, section 14, Memory Protection Unit (MPU) and section 42.2. Arm TrustZone Security .

The following bus errors correspond to the master bus:

BUS1ERRADD : Code bus

BUS2ERRADD : System bus

BUS3ERRADD : DMAC/DTC

BERAD[31:0] bits (Bus Error Address)

The BERAD[31:0] bits indicate the address when an error occurs on the associated bus. For detail of error that occurs by bus, see section 13.3.9. BUSnERRSTAT : BUS Error Status Register n (n = 1 to 3) and section 13.4. Bus Error Monitoring Section.

When an error occurs on the bus, the corresponding bit of ILERRSTAT, MMERRSTAT, SLERRSTAT in BUSnERRSTAT (n = 1 to 3) is set to 1, at the same time, the BERAD[31:0] bits store the address of the bus error access.

BERAD[31:0] bits are only valid when ILERRSTAT, MMERRSTAT, and SLERRSTAT in BUSnERRSTAT (n = 1 to 3) are set to 1.

13.3.6 BUSnERRRW : BUS Error Read Write Register (n = 1 to 3)

Base address: BUS = 0x4000_3000

Offset address: 0x1804 + 0x10 × (n - 1)

Bit position:	7	6	5	4	3	2	1	0
Bit field:	—	—	—	—	—	—	—	RWSTAT
Value after reset:	0	0	0	0	0	0	0	0

Bit	Symbol	Function	R/W
0	RWSTAT	Error Access Read/Write Status The status at the time of the error. 0: Read access 1: Write access	R
7:1	—	These bits are read as 0. The write value should be 0.	R/W

This register is cleared by reset other than MPU- and TZF-related resets which are Bus Master MPU Error Reset and TrustZone Filter Error Reset.

For detail of MPU related reset, see section 5, Resets and section 14, Memory Protection Unit (MPU).

The following bus errors correspond to the master bus:

BUS1ERRRW : Code bus

BUS2ERRRW : System bus

BUS3ERRRW : DMAC/DTC

RWSTAT bit (Error Access Read/Write Status)

The RWSTAT bit indicates the access status, (write access or read access) when an error occurs on the associated bus. For detail of error that occurs by bus, see section 13.3.9. BUSnERRSTAT : BUS Error Status Register n (n = 1 to 3) and section 13.4. Bus Error Monitoring Section.

When an error occurs on the bus, the corresponding bit of ILERRSTAT, MMERRSTAT, SLERRSTAT in BUSnERRSTAT (n = 1 to 3) is set to 1, at the same time, the RWSTAT bits store the read/write status of the bus error access.

RWSTAT bit is only valid when ILERRSTAT, MMERRSTAT, and SLERRSTAT in BUSnERRSTAT (n = 1 to 3) are set to 1.

13.3.7 BTZFnERRADD : BUS TZF Error Address Register (n = 1 to 3)

Base address: BUS = 0x4000_3000

Offset address: 0x1900 + 0x10 × (n - 1)

Bit position:	31																															0
Bit field:	BTZFERAD[31:0]																															
Value after reset:	0	0	0	0	0	0	0	0	0	0	0	0	0	0	0	0	0	0	0	0	0	0	0	0	0	0	0	0	0	0	0	0

Bit	Symbol	Function	R/W
31:0	BTZFERAD[31:0]	Bus TrustZone Filter Error Address When a bus error occurs, these bits store the error address	R

This register is cleared by reset other than MPU- and TZF-related resets which are Bus Master MPU Error Reset and TrustZone Filter Error Reset.

For detail of MPU- and TZF-related resets, see section 5, Resets, section 14, Memory Protection Unit (MPU) and section 42.2. Arm TrustZone Security .

The following bus errors correspond to the master bus:

BTZF1ERRADD : Code bus

BTZF2ERRADD : System bus

BTZF3ERRADD : DMAC/DTC

See Figure 13.1 for connection of each BUS.

BTZFERAD[31:0] bits (Bus TrustZone Filter Error Address)

The BTZFERAD[31:0] bits indicate the address, when an error occurs on the associated bus. For detail of error that occurs by bus, see section 13.3.9. BUSnERRSTAT : BUS Error Status Register n (n = 1 to 3) and section 13.4. Bus Error Monitoring Section.

When an error occurs on the bus, the corresponding bit of STERRSTAT in BUSnERRSTAT (n = 1 to 3) is set to 1, at the same time, the BTZFERAD[31:0] bits store the address of the bus error access.

BTZFERAD[31:0] bits are only valid when STERRSTAT in BUSnERRSTAT (n = 1 to 3) is set to 1.

13.3.8 BTZFnERRRW : BUS TZF Error Read Write Register (n = 1 to 3)

Base address: BUS = 0x4000_3000

Offset address: 0x1904 + 0x10 × (n - 1)

Bit position:	7	6	5	4	3	2	1	0
Bit field:	—	—	—	—	—	—	—	TRWSTAT
Value after reset:	0	0	0	0	0	0	0	0

Bit	Symbol	Function	R/W
0	TRWSTAT	TrustZone Filter Error Access Read/Write Status The status at the time of the error. 0: Read access 1: Write access	R
7:1	—	These bits are read as 0. The write value should be 0.	R/W

This register is cleared by reset other than MPU- and TZF-related resets which are Bus Master MPU Error Reset and TrustZone Filter Error Reset.

For detail of MPU- and TZF-related resets, see section 5, Resets, section 14, Memory Protection Unit (MPU) and section 42.2. Arm TrustZone Security .

The following bus errors correspond to the master bus:

BTZF1ERRRW : Code bus

BTZF2ERRRW : System bus

BTZF3ERRRW : DMAC/DTC

See Figure 13.1 for connection of each bus.

TRWSTAT bit (TrustZone Filter Error Access Read/Write Status)

The TRWSTAT bit indicates the access status, (write access or read access), when an error occurs on the associated bus. For detail of error that occurs by bus, see section 13.3.9. BUSnERRSTAT : BUS Error Status Register n (n = 1 to 3) and section 13.4. Bus Error Monitoring Section.

When an error occurs on the bus, the corresponding bit of STERRSTAT in BUSnERRSTAT (n = 1 to 3) is set to 1, at the same time, the TRWSTAT bits store the read/write status of the bus error access. The TRWSTAT bit is only valid when STERRSTAT in BUSnERRSTAT (n = 1 to 3) is set to 1.

13.3.9 BUSnERRSTAT : BUS Error Status Register n (n = 1 to 3)

Base address: BUS = 0x4000_3000

Offset address: 0x1A00 + 0x10 × (n - 1)

Bit position:	7	6	5	4	3	2	1	0
Bit field:	—	—	—	ILERRSTAT	MMERRSTAT	—	STERRSTAT	SLERRSTAT
Value after reset:	0	0	0	0	0	0	0	0

Bit	Symbol	Function	R/W
0	SLERRSTAT	Slave Bus Error Status 0: No error occurred 1: Error occurred	R
1	STERRSTAT	Slave TrustZone Filter Error Status 0: No error occurred 1: Error occurred	R
2	—	This bit is read as 0.	R

Bit	Symbol	Function	R/W
3	MMERRSTAT	Master MPU Error Status 0: No error occurred 1: Error occurred	R
4	ILERRSTAT	Illegal Address Access Error Status 0: No error occurred 1: Error occurred	R
7:5	—	These bits are read as 0.	R

This register is cleared by reset other than MPU- and TZF-related resets which are Bus Master MPU Error Reset and TrustZone Filter Error Reset.

For detail of MPU- and TZF-related resets, see section 5, Resets, section 14, Memory Protection Unit (MPU) and section 42.2. Arm TrustZone Security .

The following bus errors correspond to the master bus:

BUS1ERRSTAT : Code bus

BUS2ERRSTAT : System bus

BUS3ERRSTAT : DMAC/DTC

See Figure 13.1 for connection of each BUS

When an illegal access error, master MPU error, and slave bus error all occurred at the same time, the STAT bit is only valid in the following order of priority. The left side has higher priority.

Master MPU Error > Illegal access error, slave bus error

Note: Illegal access error and slave bus error do not occur at the same time.

If one of ILERRSTAT, MMERRSTAT or SLERRSTAT is set, these bits are not renewed until it is cleared.

SLERRSTAT bit (Slave Bus Error Status)

When slave error occurs by bus, BUSnERRSTAT.SLERRSTAT (n = 1 to 3) is set to 1. Clear condition is reset or set BUSnERRCLR.SLERRCLR (n = 1 to 3) to 1. Slave error is an error that occurs on a slave such as a timeout. For detail of slave error that occurs by bus, see section 13.4. Bus Error Monitoring Section.

STERRSTAT bit (Slave TrustZone Filter Error Status)

When slave TrustZone filter error occurs by bus, BUSnERRSTAT.STERRSTAT (n = 1 to 3) is set to 1. Clear condition is reset or set BUSnERRCLR.STERRCLR (n = 1 to 3) to 1. The STERRSTAT bit is not set when the debugger accesses the security area. For detail of slave TrustZone filter error that occurs by bus, see section 42, Security Features .

MMERRSTAT bit (Master MPU Error Status)

When master MPU error occurs by bus, BUSnERRSTAT.MMERRSTAT (n = 1 to 3) is set to 1. Clear condition is reset or set BUSnERRCLR.MMERRCLR (n = 1 to 3) to 1. For detail of master MPU error that occurs by bus, see section 14, Memory Protection Unit (MPU).

Note: At master MPU error is occur in DMAC or DTC access, if error address value is not as master MPU area, Illegal address access error or slave error is occurring before DMAC or DTC access. Decide the what error was happened by referring the error address value.

ILERRSTAT bit (Illegal Address Access Error Status)

When illegal address access error occurs by bus, BUSnERRSTAT.ILERRSTAT (n = 1 to 3) is set to 1. Clear condition is reset or set BUSnERRCLR.ILERRCLR (n = 1 to 3) to 1. For detail of illegal address access error that occurs by bus, see section 13.4. Bus Error Monitoring Section.

13.3.10 DMACDTCERRSTAT : DMAC/DTC Error Status Register

Base address: BUS = 0x4000_3000

Offset address: 0x1A24

Bit position:	7	6	5	4	3	2	1	0
Bit field:	—	—	—	—	—	—	—	MTERRSTAT
Value after reset:	0	0	0	0	0	0	0	0

Bit	Symbol	Function	R/W
0	MTERRSTAT	Master TrustZone Filter Error Status 0: No error occurred 1: Error occurred	R
7:1	—	These bits are read as 0.	R

This register is cleared by reset other than MPU- and TZF-related resets which are Bus Master MPU Error Reset and TrustZone Filter Error Reset.

For detail of MPU- and TZF-related resets, see section 5, Resets, section 14, Memory Protection Unit (MPU) and section 42.2. Arm TrustZone Security .

MTERRSTAT bit (Master TrustZone Filter Error Status)

When a master TrustZone filter error occurs by DMAC or DTC, DMACDTCERRSTAT.MTERRSTAT is set to 1. Clear condition is reset or set DMACDTCERRCLR.MTERRCLR to 1.

For detail of master TrustZone filter error that occurs by DMAC or DTC, see section 15, DMA Controller (DMAC) and section 16, Data Transfer Controller (DTC)

13.3.11 BUSnERRCLR : BUS Error Clear Register n (n = 1 to 3)

Base address: BUS = 0x4000_3000

Offset address: 0x1A08 + 0x10 × (n - 1)

Bit position:	7	6	5	4	3	2	1	0
Bit field:	—	—	—	ILERRCLR	MMERRCLR	—	STERRCLR	SLERRCLR
Value after reset:	0	0	0	0	0	0	0	0

Bit	Symbol	Function	R/W
0	SLERRCLR	Slave Bus Error Clear Writing 1 to the SLERRCLR bit clears the BUSnERRSTAT.SLERRSTAT (n = 1 to 3)	R/W*1
1	STERRCLR	Slave TrustZone Filter Error Clear Writing 1 to the STERRCLR bit clears the BUSnERRSTAT.STERRSTAT (n = 1 to 3)	R/W*1
2	—	This bit is read as 0. The write value should be 0.	R/W
3	MMERRCLR	Master MPU Error Clear Writing 1 to the MMERRCLR bit clears the BUSnERRSTAT.MMERRSTAT (n = 1 to 3)	R/W*1
4	ILERRCLR	Illegal Address Access Error Clear Writing 1 to the ILERRCLR bit clears the BUSnERRSTAT.ILERRSTAT (n = 1 to 3)	R/W*1
7:5	—	These bits are read as 0. The write value should be 0.	R/W

Note: If the security attribution is configured as Secure:
- Secure access and Non-secure read access are allowed
- Non-secure write access is ignored, and TrustZone access error is not generated.

If the security attribution is configured as Non-secure:
- Secure and Non-secure access are allowed.

Note 1. Only 1 can be written to this bit. This bit is read as 0. Writing 0 to this bit has no effect.

The following bus errors correspond to the master bus:

BUS1ERRCLR : Code bus

BUS2ERRCLR : System bus

BUS3ERRCLR : DMAC/DTC

When writing 1 to BUSnERRCLR (n = 1 to 3), stop the bus access that causes an error in the corresponding bus master.

13.3.12 DMACDTCERRCLR : DMAC/DTC Error Clear Register

Base address: BUS = 0x4000_3000

Offset address: 0x1A2C

Bit position:	7	6	5	4	3	2	1	0
Bit field:	—	—	—	—	—	—	—	MTERRCLR
Value after reset:	0	0	0	0	0	0	0	0

Bit	Symbol	Function	R/W
0	MTERRCLR	Master TrustZone filter Error Clear Writing 1 to this bit clears the DMACDTCERRSTAT.MTERRSTAT flag.	R/W*1
7:1	—	This bit is read as 0. The write value should be 0.	R/W

Note: If the security attribution is configured as Secure:
- Secure access and Non-secure read access are allowed
- Non-secure write access is ignored, and TrustZone access error is not generated.

If the security attribution is configured as Non-secure:
- Secure and Non-secure access are allowed.

Note 1. Only 1 can be written to this bit. This bit is read as 0. Writing 0 to this bit has no effect.

When writing 1 to DMACDTCERRCLR, stop the bus access that causes an error in DMAC/DTC.

13.4 Bus Error Monitoring Section

The bus error monitoring system monitors each individual area, and when an error is detected, an error is returned to the requesting master IP using the AHB-Lite error response protocol.

13.4.1 Bus Error Types

The following types of errors can occur on each bus:

- Illegal address access
- Bus master MPU error
- TrustZone Filter error
- Bus error transmitted from each slave IP

Table 13.2 lists the address ranges where access leads to illegal address access errors. The reserved area in the slave does not trigger an illegal address access error. For more information on the bus master MPU, see section 14, Memory Protection Unit (MPU).

13.4.2 Operations When a Bus Error Occurs

When a bus error occurs, operation is not guaranteed and the error is returned to the requesting master IP.

Figure 13.3 shows operation from each error detection to user notification on the bus.

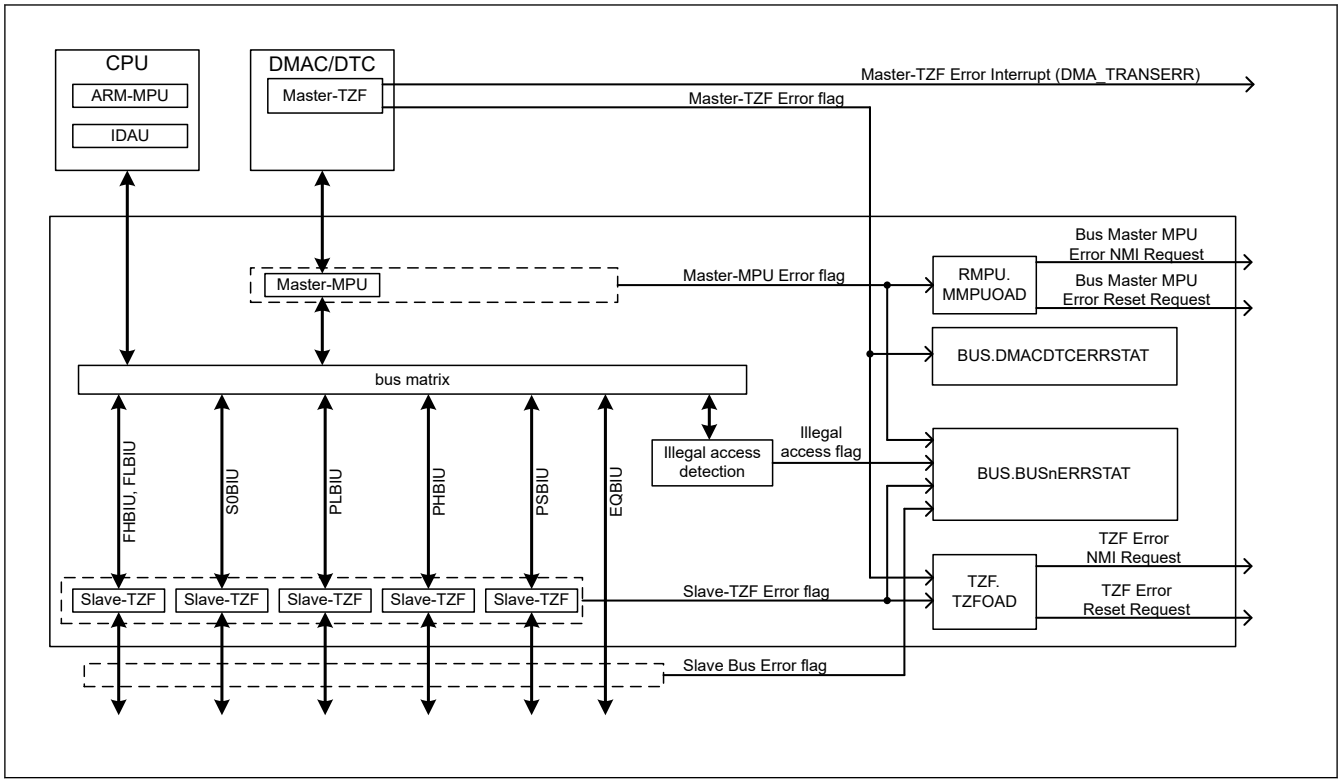

Figure 13.3 The operation from each error detection to user notification on the bus

(1) Bus Master MPU Error

The bus master of DMAC/DTC has a master MPU for access control of the set address area. The CPU does not have a master MPU because it has an Arm MPU. When a bus master MPU error is detected, an Error response is returned to the master. At the same time, perform the following steps:

1. Store the address of the error in BUSnERRADD (n = 3).
2. Store the read/write information of the error in BUSnERRRW (n = 3).
3. Set 1 to MMERRSTAT bit of BUSnERRSTAT (n = 3).

An NMI request or a reset request is generated according to the MMPUOAD.OAD setting (see section 14, Memory Protection Unit (MPU)). Since BUSnERRADD (n = 3), BUSnERRRW (n = 3), and BUSnERRSTAT (n = 3) are held until reset other than MPU- and TZF-related resets or cleared by BUSnERRCLR (n = 3), they can be verified in the NMI handler or after reset.

An NMI request is generated only on the first bus master MPU error after a reset or clearing of BUSnERRSTAT.MMERRSTAT (n = 3) bit by BUSnERRCLR (n = 3).

(2) Illegal Access Error

section 13.4.3. Conditions Leading to Illegal Address Access Errors, describes illegal access errors. When an illegal access error is detected, an Error response is returned to the master. At the same time, perform the following steps:

1. Store the address of the error in BUSnERRADD (n = 1 to 3).
2. Store the read/write information of the error in BUSnERRRW (n = 1 to 3).
3. Set 1 to ILERRSTAT bit of BUSnERRSTAT (n = 1 to 3).

NMI request and reset request are not generated. Since BUSnERRADD (n = 1 to 3), BUSnERRRW (n = 1 to 3), BUSnERRSTAT (n = 1 to 3) are held until reset other than MPU- and TZF-related resets or cleared by BUSnERRCLR (n = 1 to 3), they can be confirmed in the Bus Fault handler or the interrupt handler.

(3) Master-TZF Error

As described in section 42, Security Features , DMAC/DTC has Master-TZF errors. When a Master-TZF error is detected, 1 is set to MTERRSTAT bit of DMACDTCERRSTAT, and because the DMAC/DTC does not perform bus access, no bus error information is stored in BTZF3ERRADD and BTZF3ERRRW.

An NMI request or reset request is generated according to the setting of TZFOAD.OAD. See section 15, DMA Controller (DMAC), section 16, Data Transfer Controller (DTC) for details on Master-TZF errors. Because DMACDTCERRSTAT is held until reset other than MPU- and TZF-related resets or cleared by DMACDTCERRCLR, they can be verified in the NMI handler or after reset.

An NMI request is generated only on the first Master-TZF error after reset or clearing of the DMACDTCERRSTAT.MTERRSTAT bit by DMACDTCERRCLR.

(4) Slave-TZF Error

As described in section 42, Security Features , FHBIU (code flash), FLBIU (data flash), S0BIU (SRAM), PHBIU, PLBIU and PSBIU have Slave-TZF errors. When a Slave-TZF error is detected, perform the following steps:

1. Store the address of the error in BTZFnERRADD (n = 1 to 3).
2. Store the read/write information of the error in BTZFnERRRW (n = 1 to 3).
3. Set 1 to STERRSTAT bit of BUSnERRSTAT (n = 1 to 3).

NMI request or reset request is generated according to the setting in TZFOAD.OAD. Since BTZFnERRADD (n = 1 to 3), BTZFnERRRW (n = 1 to 3), and BUSnERRSTAT (n = 1 to 3) are held until reset other than MPU- and TZF-related resets or cleared by BUSnERRCLR (n = 1 to 3), they can be verified in the NMI handler or after reset.

An NMI request is generated only on the first Slave-TZF error after a reset or clearing of the BUSnERRSTAT.STERRSTAT (n = 1 to 3) bit by BUSnERRCLR (n = 1 to 3).

(5) Slave Bus Error

Slave Bus Error occurs in the slave. When Slave Bus Error is detected, an Error response is returned to the master. At the same time, perform the following steps:

1. Store the address of the error in BUSnERRADD (n = 1 to 3)
2. Store the read/write information of the error in BUSnERRRW (n = 1 to 3)
3. Set 1 to SLERRSTAT bit of BUSnERRSTAT (n = 1 to 3).

An NMI request and reset request are not generated. Since BUSnERRADD (n = 1 to 3), BUSnERRRW (n = 1 to 3), and BUSnERRSTAT (n = 1 to 3) are held until reset other than MPU- and TZF-related resets or cleared by BUSnERRCLR (n = 1 to 3), they can be verified in the Bus Fault handler or interrupt handler. When a bus slave MPU error occurs, the error is returned to the requesting master IP and operation is not guaranteed.

13.4.3 Conditions Leading to Illegal Address Access Errors

Table 13.2 lists the address spaces for each bus that trigger illegal address access errors.

Table 13.2 Conditions leading to illegal address access errors (1 of 2)

Address	Slave bus	Master bus		
		CPU		DMA
		Code	System	
0x0000_0000 to 0x01FF_FFFF	FHBIU	—		—
0x0200_0000 to 0x07FF_FFFF	Reserved	E		E
0x0800_0000 to 0x0803_FFFF	FLBIU	—		—
0x0804_0000 to 0x0FFF_FFFF	Reserved	E		E
0x1000_0000 to 0x100F_FFFF	Reserved	—		E
0x1010_0000 to 0x1FFF_FFFF	Reserved	E		E

Table 13.2 Conditions leading to illegal address access errors (2 of 2)

Address	Slave bus	Master bus		
		CPU		DMA
		Code	System	
0x2000_0000 to 0x2800_FFFF	S0BIU		—	—
0x2801_0000 to 0x3FFF_FFFF	Reserved		E	E
0x4000_0000 to 0x4000_0FFF	PSBIU		—	—
0x4000_1000 to 0x4000_1FFF	Reserved		E	E
0x4000_2000 to 0x4000_2FFF	PSBIU		—	—
0x4000_3000 to 0x4000_3FFF	Reserved		E	E
0x4000_4000 to 0x4000_8FFF	PSBIU		—	—
0x4000_9000 to 0x4001_AFFF	Reserved		E	E
0x4001_B000 to 0x4001_CFFF	PSBIU		—	—
0x4001_D000 to 0x4001_DFFF	Reserved		E	E
0x4001_E000 to 0x4002_1FFF	PSBIU		—	—
0x4002_2000 to 0x4007_FFFF	Reserved		E	E
0x4008_0000 to 0x400F_FFFF	PLBIU		—	—
0x4010_0000 to 0x4017_FFFF	PHBIU		—	—
0x4018_0000 to 0x407D_FFFF	Reserved		E	E
0x407E_0000 to 0x407F_FFFF	FLBIU		—	—
0x4080_0000 to 0x5FFF_FFFF	Reserved		E	E
0x6000_0000 to 0x67FF_FFFF	EQBIU		—	—
0x6800_0000 to 0x87FF_FFFF	Reserved		E	E
0x8800_0000 to 0xDFFF_FFFF	Reserved		E	E
0xE000_0000 to 0xFFFF_FFFF	System for Cortex®-M33			E

Note: "E" : A bus error occurs.
" " : Transfer does not occur.
"—" : A bus error has not occurred. Even if there has reserved area, a bus error has not occurred.
Do not access reserved area in FLBIU and S0BIU. If accessed, a slave TZF error might occur.

13.4.4 Time-out

For some peripheral modules, a timeout error occurs with the module-stop function. When there is no response from the slave for a certain period of time, a timeout error is detected. A timeout error is returned to the requesting master IP using the AHB-Lite error response protocol.

13.5 References

1. ARM Limited, *ARM® v8-M Architecture Reference Manual* (ARM DDI0553B.v)
2. ARM Limited, *ARM® Cortex®-M33 Processor Technical Reference Manual Revision:r1p0 (ARM 100230_0100_07_en)*
3. ARM Limited, *ARM® AMBA® AHB Protocol Specification* (ARM IHI 0033C)
4. ARM Limited, *ARM® AMBA® AXI and ACE Protocol Specification* (ARM IHI 0022H.c)
5. ARM Limited, *ARM® AMBA® APB Protocol Specification* (ARM IHI 0024D)

13.6 Cache

13.6.1 Overview

There are two types of caches:

- C-cache on code bus
- S-cache on system bus.

Table 13.3 lists the specifications of the cache, Figure 13.4 shows a block diagram of the cache, and Figure 13.5 shows the cache structure.

Table 13.3 Cache specifications

Parameter	C-cache	S-cache
Capacity	2 KB	2 KB
Way	2-way set associative	2-way set associative
Line size	32/64 bytes	32/64 bytes
Number of entry	32/16 entry/way	32/16 entry/way
Write way	No write	Write-through, non-write allocate
Replace way	2-way: LRU (least recently used)	2-way: LRU (least recently used)
Cache support area	0x0000_0000 to 0x1FFF_FFFF	0x2000_0000 – 0xDFFF_FFFF*1

Note 1. Peripheral area 0x4000_0000 to 0x5FFF_FFFF and QSPI I/O register area 0x6400_0000 to 0x67FF_FFFF must not have the cacheable attribution in the Arm MPU.

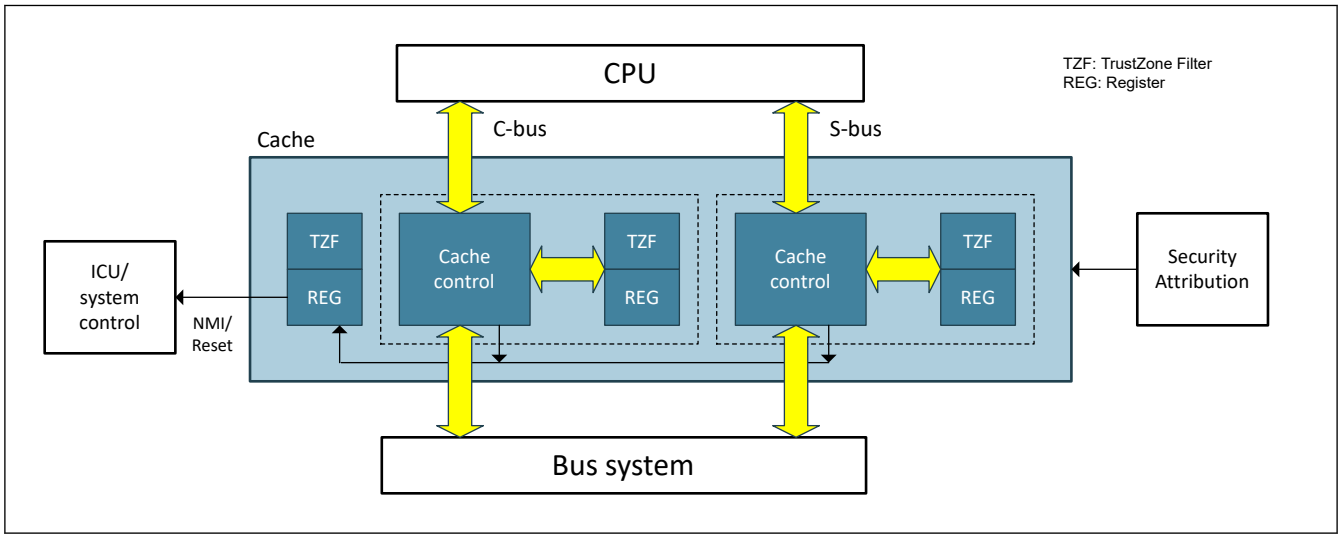

Figure 13.4 Cache block diagram

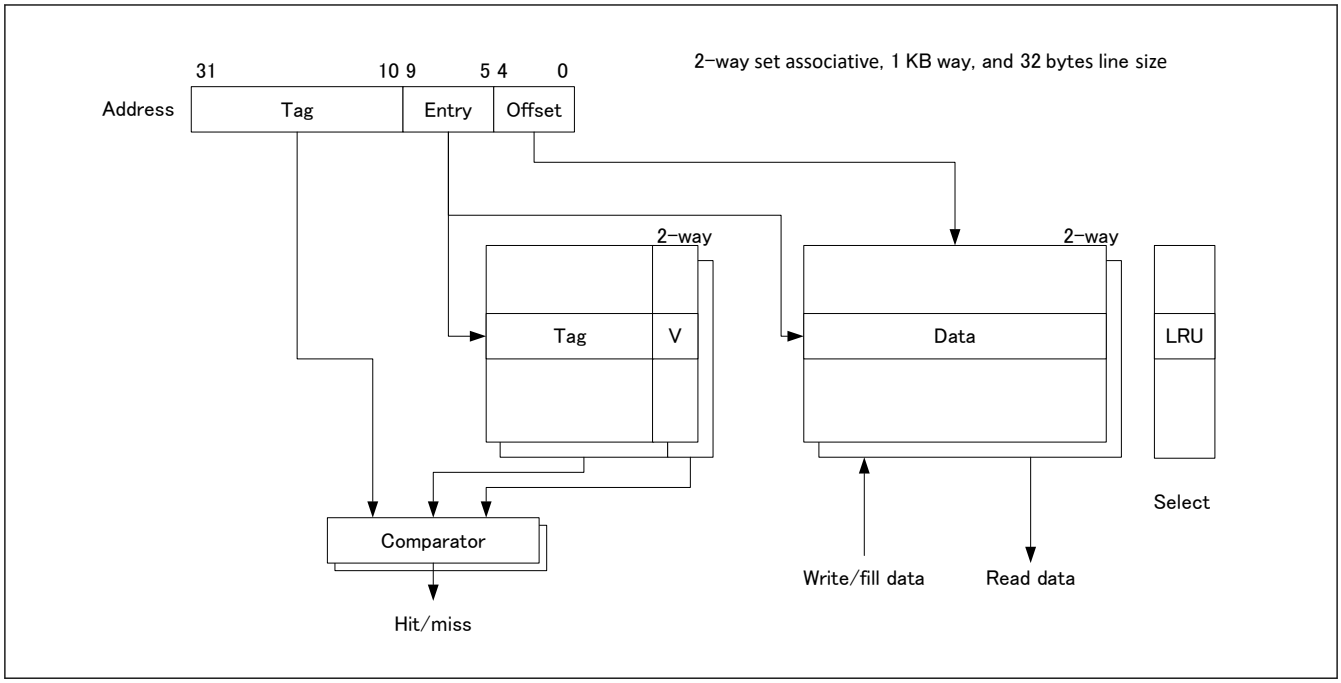

Figure 13.5 Cache structure for 2-way set associative of 2 KB capacity and 32 bytes line size

13.6.2 Register Description

13.6.2.1 CSAR : Cache Security Attribution Register

Base address: CPSCU = 0x4000_8000

Offset address: 0x000

Bit position:	31	30	29	28	27	26	25	24	23	22	21	20	19	18	17	16
Bit field:	—	—	—	—	—	—	—	—	—	—	—	—	—	—	—	—
Value after reset:	1	1	1	1	1	1	1	1	1	1	1	1	1	1	1	1

Bit position:	15	14	13	12	11	10	9	8	7	6	5	4	3	2	1	0
Bit field:	—	—	—	—	—	—	—	—	—	—	—	—	—	CACHEESA	CACHELSA	CACHESA
Value after reset:	1	1	1	1	1	1	1	1	1	1	1	1	1	1	1	1

Bit	Symbol	Function	R/W
0	CACHESA	Security Attributes of Registers for Cache Control 0: Secure 1: Non-secure	R/W
1	CACHELSA	Security Attributes of Registers for Cache Line Configuration 0: Secure 1: Non-secure	R/W
2	CACHEESA	Security Attributes of Registers for Cache Error 0: Secure 1: Non-secure	R/W
31:3	—	These bits are read as 1.	R

Note: Only secure access can write to this register. Both secure access and Non-secure read access are allowed but Non-secure write access is not allowed and TrustZone access error is not generated.

Note: This register is write-protected by PRCR register.

CACHESA bit (Security Attributes of Registers for Cache Control)

The CACHESA bit indicates the security attributes of registers for cache control. The target registers are:

- CCACTL
- SCACTL.

CACHELSA bit (Security Attributes of Registers for Cache Line Configuration)

The CACHELSA bit indicates the security attributes of registers for cache line configuration. The target registers are:
- CCALCF
- SCALCF.

CACHEESA bit (Security Attributes of Registers for Cache Error)

The CACHEESA bit indicates the security attributes of registers for cache error.
- CAPOAD
- CAPRCR.

13.6.2.2 CCACTL : C-Cache Control Register

Base address: CACHE = 0x4000_7000

Offset address: 0x000

Bit position:	31																															0
Bit field:	—	—	—	—	—	—	—	—	—	—	—	—	—	—	—	—	—	—	—	—	—	—	—	—	—	—	—	—	—	—	—	ENC
Value after reset:	0	0	0	0	0	0	0	0	0	0	0	0	0	0	0	0	0	0	0	0	0	0	0	0	0	0	0	0	0	0	0	0

Bit	Symbol	Function	R/W
0	ENC	C-Cache Enable Set the C-cache enable: 0: Disable C-cache 1: Enable C-cache	R/W
31:1	—	These bits are read as 0. The write value should be 0.	R

Note: If the security attribution is configured as Secure:
- Secure access and Non-secure read access are allowed
- Non-secure write access is ignored, and TrustZone access error is not generated.

If the security attribution is configured as Non-secure:
- Secure and Non-secure access are allowed.

ENC bit (C-Cache Enable)

The ENC bit controls the cache enable of C-cache. When the ENC bit changes from 0 to 1, the Valid bit of C-cache is cleared.

13.6.2.3 CCAFCT : C-Cache Flush Control Register

Base address: CACHE = 0x4000_7000

Offset address: 0x004

Bit position:	31																															0
Bit field:	—	—	—	—	—	—	—	—	—	—	—	—	—	—	—	—	—	—	—	—	—	—	—	—	—	—	—	—	—	—	—	FC
Value after reset:	0	0	0	0	0	0	0	0	0	0	0	0	0	0	0	0	0	0	0	0	0	0	0	0	0	0	0	0	0	0	0	0

Bit	Symbol	Function	R/W
0	FC	C-Cache Flush Set the C-cache line flush: 0: No action 1: C-cache line flush (all lines invalidated)	R/W
31:1	—	These bits are read as 0. The write value should be 0.	R

FC bit (C-Cache Flush)

The FC bit controls the cache flush of C-cache.

[Setting condition]

- When writing 1 to this bit.
- When setting CCACTL.ENC bit from 0 to 1.

[Clearing condition]

- This bit is cleared automatically when cache flush is performed.

13.6.2.4 CCALCF : C-Cache Line Configuration Register

Base address: CACHE = 0x4000_7000

Offset address: 0x008

Bit position:	31																														1	0
Bit field:	—	—	—	—	—	—	—	—	—	—	—	—	—	—	—	—	—	—	—	—	—	—	—	—	—	—	—	—	—	—	CC[1:0]	
Value after reset:	0	0	0	0	0	0	0	0	0	0	0	0	0	0	0	0	0	0	0	0	0	0	0	0	0	0	0	0	0	0	0	1

Bit	Symbol	Function	R/W
1:0	CC[1:0]	C-Cache Line Size Set the C-cache line size: 0 0: Prohibited 0 1: Cache line size 32 bytes 1 0: Cache line size 64 bytes 1 1: Prohibited	R/W
31:2	—	These bits are read as 0. The write value should be 0.	R

Note: If the security attribution is configured as Secure:
- Secure access and Non-secure read access are allowed
- Non-secure write access is ignored, and TrustZone access error is not generated.

If the security attribution is configured as Non-secure:
- Secure and Non-secure access are allowed.

CC[1:0] bits (C-Cache Line Size)

The CC[1:0] bits control the cache line size of C-cache. This bit can be written when the CCACTL.ENC bit is 0. Otherwise, this bit cannot be written.

13.6.2.5 SCACTL : S-Cache Control Register

Base address: CACHE = 0x4000_7000

Offset address: 0x040

Bit position:	31																															0
Bit field:	—	—	—	—	—	—	—	—	—	—	—	—	—	—	—	—	—	—	—	—	—	—	—	—	—	—	—	—	—	—	—	ENS
Value after reset:	0	0	0	0	0	0	0	0	0	0	0	0	0	0	0	0	0	0	0	0	0	0	0	0	0	0	0	0	0	0	0	0

Bit	Symbol	Function	R/W
0	ENS	S-Cache Enable Set the S-cache enable: 0: Disable S-cache 1: Enable S-cache	R/W
31:1	—	These bits are read as 0. The write value should be 0.	R

Note: If the security attribution is configured as Secure:
- Secure access and Non-secure read access are allowed
- Non-secure write access is ignored, and TrustZone access error is not generated.

If the security attribution is configured as Non-secure:
- Secure and Non-secure access are allowed.

ENS bit (S-Cache Enable)

The ENS bit controls the cache enable of S-cache. When the ENS bit changes from 0 to 1, the Valid bit of S-cache is cleared.

13.6.2.6 SCAFCT : S-Cache Flush Control Register

Base address: CACHE = 0x4000_7000

Offset address: 0x044

Bit position:	31																															0
Bit field:	—	—	—	—	—	—	—	—	—	—	—	—	—	—	—	—	—	—	—	—	—	—	—	—	—	—	—	—	—	—	—	FS
Value after reset:	0	0	0	0	0	0	0	0	0	0	0	0	0	0	0	0	0	0	0	0	0	0	0	0	0	0	0	0	0	0	0	0

Bit	Symbol	Function	R/W
0	FS	S-Cache Flush Set the S-cache line flush: 0: No action 1: S-cache line flush (all lines invalidated)	R/W
31:1	—	These bits are read as 0. The write value should be 0.	R

FS bit (S-Cache Flush)

The FS bit controls the cache flush of S-cache.

[Setting condition]

When writing 1 to this bit.

When setting SCACTL.ENS bit from 0 to 1.

[Clearing condition]

This bit is cleared automatically when cache flush is performed.

13.6.2.7 SCALCF : S-Cache Line Configuration Register

Base address: CACHE = 0x4000_7000

Offset address: 0x048

Bit position:	31																														1	0
Bit field:	—	—	—	—	—	—	—	—	—	—	—	—	—	—	—	—	—	—	—	—	—	—	—	—	—	—	—	—	—	—	CS[1:0]	
Value after reset:	0	0	0	0	0	0	0	0	0	0	0	0	0	0	0	0	0	0	0	0	0	0	0	0	0	0	0	0	0	0	0	1

Bit	Symbol	Function	R/W
1:0	CS[1:0]	S-Cache Line Size Set the S-cache line size: 0 0: Prohibited 0 1: Cache line size 32 bytes 1 0: Cache line size 64 bytes 1 1: Prohibited	R/W
31:2	—	These bits are read as 0. The write value should be 0.	R

Note: If the security attribution is configured as Secure:
- Secure access and Non-secure read access are allowed
- Non-secure write access is ignored, and TrustZone access error is not generated.

If the security attribution is configured as Non-secure:
- Secure and Non-secure access are allowed.

CS[1:0] bits (S-Cache Line Size)

The CS[1:0] bits control the cache line size of S-cache. This bit can be written when the SCACTL.ENS bit is 0. Otherwise, this bit cannot be written.

[Setting condition]

This bit can be written when the SCACTL.ENS bit is 0. Otherwise, this bit cannot be written.

13.6.2.8 CAPOAD : Cache Parity Error Operation After Detection Register

Base address: CACHE = 0x4000_7000

Offset address: 0x200

Bit position:	31																															0
Bit field:	—	—	—	—	—	—	—	—	—	—	—	—	—	—	—	—	—	—	—	—	—	—	—	—	—	—	—	—	—	—	—	OAD
Value after reset:	0	0	0	0	0	0	0	0	0	0	0	0	0	0	0	0	0	0	0	0	0	0	0	0	0	0	0	0	0	0	0	0

Bit	Symbol	Function	R/W
0	OAD	Operation after Detection Select the operation after detection. 0: Non-maskable interrupt 1: Reset	R/W
31:1	—	These bits are read as 0. The write value should be 0.	R

Note: If the security attribution is configured as Secure:
- Secure access and Non-secure read access are allowed
- Non-secure write access is ignored, and TrustZone access error is not generated.

If the security attribution is configured as Non-secure:
- Secure and Non-secure access are allowed.

OAD bit (Operation after Detection)

The OAD bit generates either a reset or a non-maskable interrupt when parity error is detected.

The protection register (CAPRCR) protects this register against writes. Modify the valid bit in the protection register (CAPRCR) to enable before writing to this bit. Do not write to CAPOAD while access to cache is in progress.

13.6.2.9 CAPRCR : Cache Protection Register

Base address: CACHE = 0x4000_7000

Offset address: 0x204

Bit position:	31	30	29	28	27	26	25	24	23	22	21	20	19	18	17	16
Bit field:	—	—	—	—	—	—	—	—	—	—	—	—	—	—	—	—
Value after reset:	0	0	0	0	0	0	0	0	0	0	0	0	0	0	0	0

Bit position:	15	14	13	12	11	10	9	8	7	6	5	4	3	2	1	0
Bit field:	—	—	—	—	—	—	—	—	KW[6:0]							PRCR
Value after reset:	0	0	0	0	0	0	0	0	0	0	0	0	0	0	0	0

Bit	Symbol	Function	R/W
0	PRCR	Register Write Control Set the register write control: 0: Disable writes to protected registers 1: Enable writes to protected registers	R/W
7:1	KW[6:0]	Write key code These bits enable or disable writes to the PRCR bit.	R/W

Bit	Symbol	Function	R/W
31:8	—	These bits are read as 0. The write value should be 0.	R/W

Note: If the security attribution is configured as Secure:
- Secure access and Non-secure read access are allowed
- Non-secure write access is ignored, and TrustZone access error is not generated.

If the security attribution is configured as Non-secure:
- Secure and Non-secure access are allowed.

PRCR bit (Register Write Control)

The PRCR bit controls the write mode of the CAPOAD register. When this bit is set to 1, writing to the CAPOAD register is enabled. When writing to this bit, write 0x78 to the KW[6:0] bits simultaneously.

KW[6:0] bits (Write key code)

The KW[6:0] bits enable or disable writes to the PRCR bit. When writing to the PRCR bit, write 0x78 to the KW[6:0] bits simultaneously. When a value other than 0x78 is written to KW[6:0] bits, the PRCR bit is not updated. The KW[6:0] bits are always read as 0x00.

13.6.3 Operation

13.6.3.1 S-Cache

Figure 13.6 shows the access flow from CPU to S-cache.

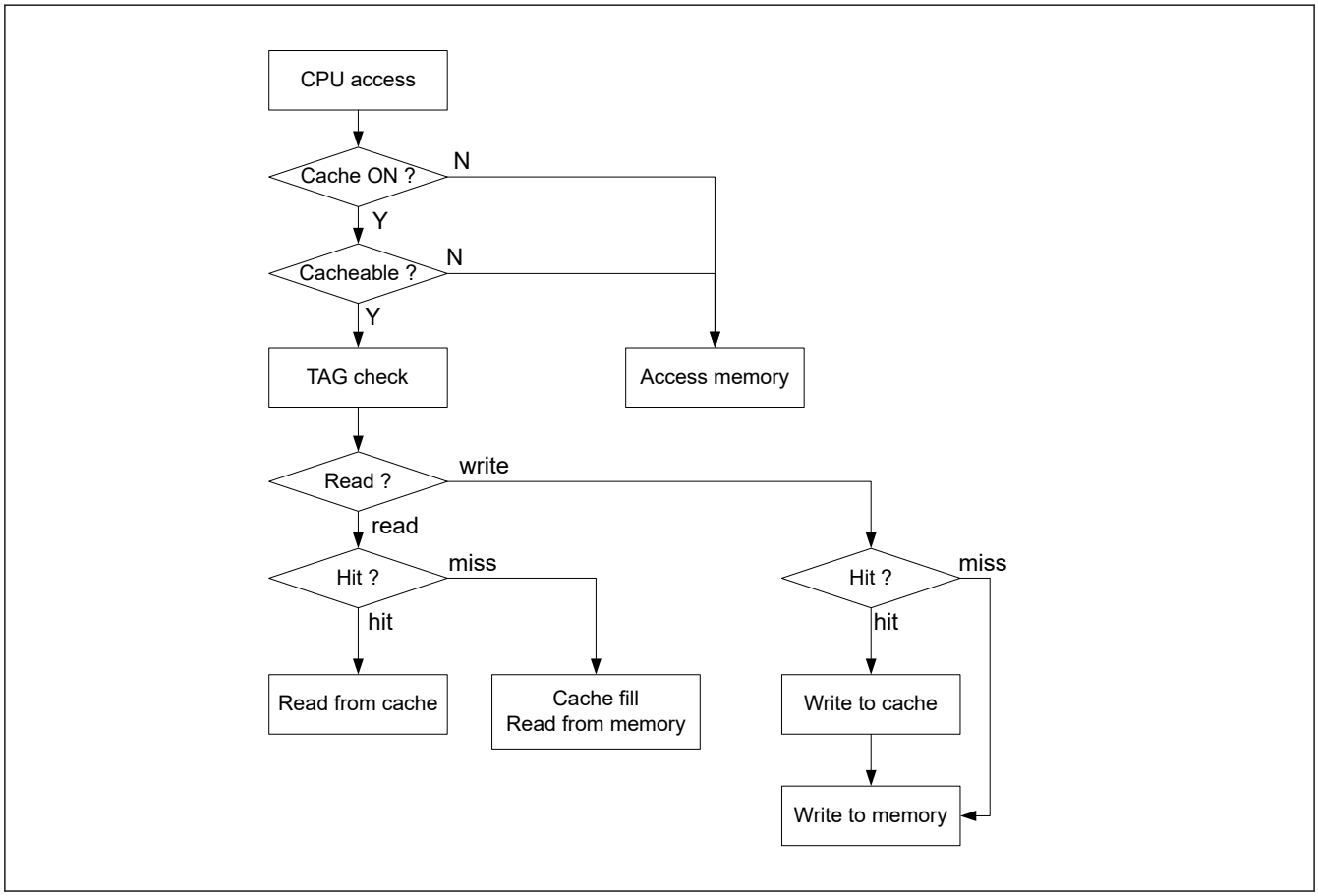

Figure 13.6 Access flow from CPU to S-cache

The cache function works when cache is enabled (SCACTL.ENS = 1) and cacheable access is from CPU. The cache checks the address of CPU access request and request in cache tag, then determines whether the CPU access is a hit or a miss-hit.

Read miss

The cache reads one cache line data from memory and stores it into the cache data. The cache then returns the required data to CPU.

Read hit

The cache reads required data from the cache data and returns it to CPU. Access cycle then determines it is a hit because of the 0 wait cycle.

Write miss

The cache processes only a write cycle to memory. No affect to cache data.

Write hit

The cache processes both a write cycle to cache data and a write cycle to memory.

13.6.3.2 C-Cache

Figure 13.7 shows the access flow from CPU to C-cache.

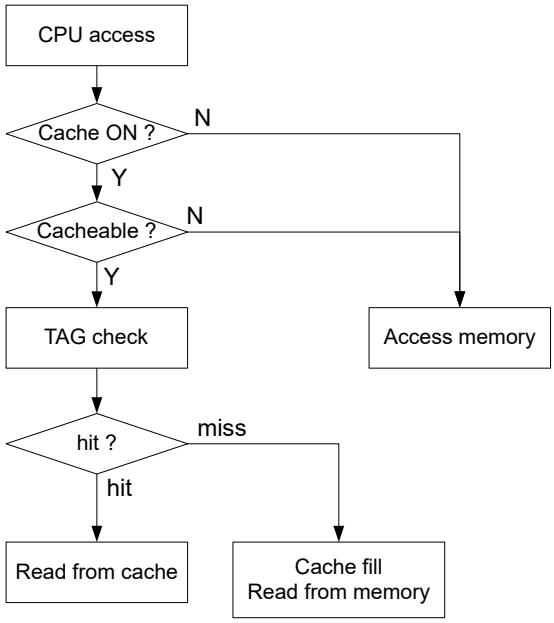

Figure 13.7 Access flow from CPU to C-cache

The cache function works when cache is enabled (CCACTL.ENC = 1) and cacheable access is from CPU. The cache checks the address of CPU access request and request in cache tag, then determines whether the CPU access is a hit or a miss-hit.

Read miss

The cache reads one cache line data from memory and stores it into the cache data. The cache then returns the required data to CPU.

Read hit

The cache reads required data from the cache data and returns it to CPU. Access cycle then determines it is a hit because of the 0 wait cycle.

Because C-cache does not function in the ROM area of C-cache, therefore it operates in read-only access.

13.6.3.3 Cache Flush

The Valid bit is cleared with the CAFCT register. However, tag and cache data are not affected by the CAFCT register.

The valid bit is also cleared when CACTL is set from 0 to 1.

Note: After changing the cacheable attribute by the Arm MPU, clear the valid bit using the CAFCT register.

13.6.3.4 LRU and Replace

The cache uses LRU (Least Recently Used) mechanism as the cache replacement algorithm. If a CPU access is determined as a hit or a miss-hit, the cache replaces cache data that is not the last restored. Additionally, the cache is tagged as the latest data in LRU of the cache data. Therefore even when the cache line in cache ways are full, the cache can replace cache data using LRU which shows older data.

The algorithm for a 2-way LRU shows which way, for example way 0 or way 1, is the latest stored.

13.6.3.5 Parity Check

The cache has a parity check function for cache RAM that is stored as cache fill data. The cache has 4-bit parities for 32-bit data, that is when data is read, a parity bit is added to every 8-bit data of 32-bit data width. When the cache reads data with a hit status, it checks for parity errors. When a parity error occurs, a parity error notification is generated.

The cache reads 32-bit data even when the CPU requests a byte read or half-word read.

Note: A parity error might occur even though it is caused by a non validated-data byte of which the CPU does not request.

Parity error notification can be specified as a non-maskable interrupt or a reset request in the CAPOAD register. However, if the debug mode requests to suppress the parity error notification, then notification is not generated.

When a parity error occurs, the cache does not perform a cache flush and does not respond to the CPU with a bus error.

Parity errors often occur due to noise. To confirm whether the cause of the parity error is noise or corruption, see the flows for cache parity check in Figure 13.8 and Figure 13.9.

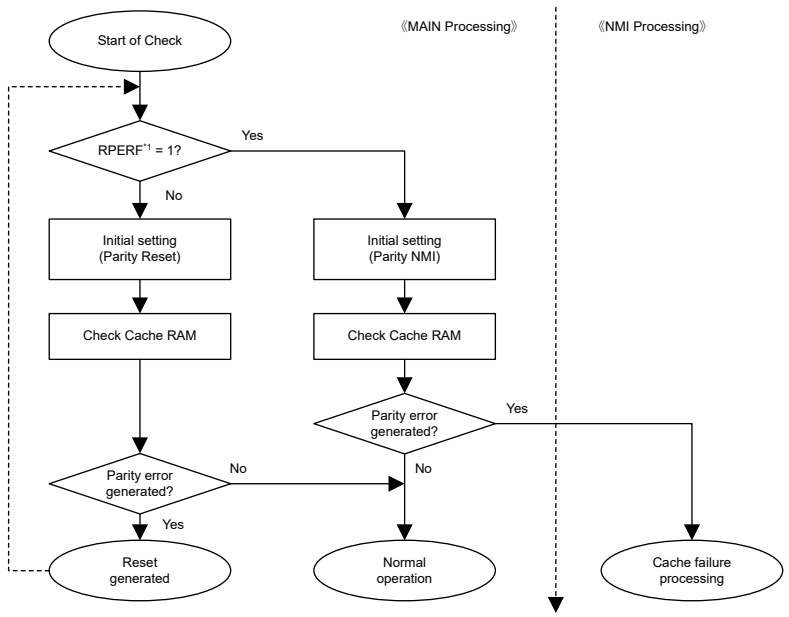

Note 1. RPERF: Cache Parity Error Reset Detect Flag (RSTSR1.RPERF)

Figure 13.8 Flow of cache parity check when parity reset is enabled

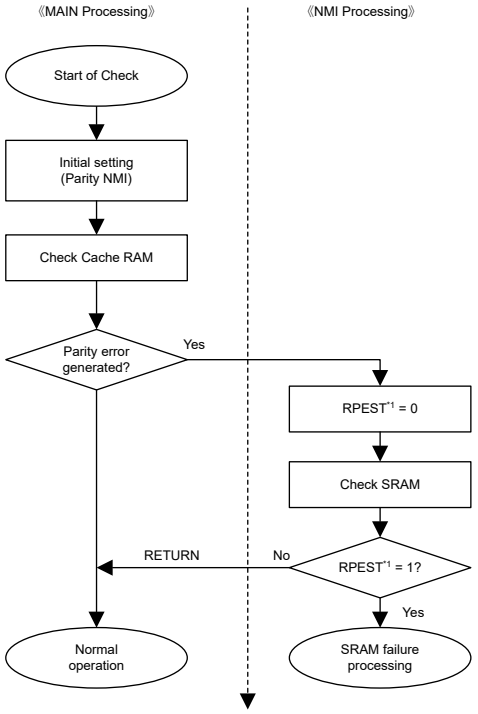

Note 1. RPEST: Cache Parity Error Interrupt Detect Flag (NMISR.RPEST)

Figure 13.9 Flow of cache parity check when parity interrupt is enabled

13.6.3.5.1 Cache RAM Check

Parity error of cache RAM occurs at a read access by CPU with a cache status of read-hit. With a read-hit status, some conditions are required before performing a cache RAM check. For S-cache check, execute the check program in flash memory. For C-cache check, execute the check program in SRAM.

(1) Cache RAM check flow

1. Flush all valid bits in cache to clear the cache enable bit.
2. Reserve a 2-KB work memory such as SRAM for S-cache. Because each cache in the MCU is a 2-way set associative with 1 KB RAM per way, a total of 2 KB is required for S-cache. The target address should not be used as reserved area.
3. Set the cache enable to 1.
4. Read data from the target word address of 2 KB using the CPU. The status of cache should be a read-miss with the result stored as cache fill data.
5. Read data in another cache way whose address is calculated by adding the address in step 4. with 1 KB address. The status of cache should be a read-miss with the result stored as cache fill data in another way. Cache RAM check for a write/read-hit status is now complete.
6. Write test data to the target word address in steps 4. and 5.. The status of cache in steps 4. and 5. should be a write-hit with the results written to the cache RAM.
7. Read from the target word address in steps 4. and 5. again. The status of cache in steps 4. and 5. should be a read-hit. Parity check for a word data is now complete.
8. Go to step 1. to continue parity check for different target addresses.

13.6.3.6 Bus Error

The association from a bus slave to a bus error is described in the sections that follow.

In cache off

The cache returns a bus error to the CPU.

For non-cacheable access

The cache returns a bus error to the CPU.

During read accesses for cache fill

For the first data that corresponds to a CPU access request, the cache returns a bus error to the CPU. For other read data while filling the cache line, the cache cannot return a bus error to the CPU except for read data with early forwarding. The cache enable bit clears the cache line if the cache accepts a bus error response from the slave.

For write-hit status

The cache cannot return a bus error to the CPU because the cache enable bit does not clear the cache line.

For write-miss status

The cache cannot return a bus error to the CPU.

13.6.3.7 Early Forwarding Function

While filling data in the cache, if the address of the CPU read request and the address of the cache fill request are the same, the cache returns the data to CPU. Table 13.4 shows an example.

Table 13.4 Example of early forwarding

Operation	Access sequence								
Address of CPU read request	0x04	0x08	0x0C	0x14	→	0x10	→	→	→
Address of cache fill	0x04	0x08	0x0C	0x10	0x14	0x18	0x1C	0x00	—
CPU access status	Read (0x04)	Read (0x08)	Read (0x0C)	—	Read (0x14)	—	—	—	Read (0x10)

When the CPU requests read accesses and the addresses are 0x04, 0x08, 0x0C, 0x14 and 0x10 sequentially, the first read access to address 0x04 is of a miss-hit status and the cache starts to fill data into cache. The early forwarding function allows a return of read data to CPU when accesses are to addresses 0x08, 0x0C and 0x14 while the cache is filling the cache line. On the other hand, access to address 0x10 must wait for the completion of filling the cache line. The cache then returns data for address 0x10 when it finished filling the cache line.

13.6.4 Usage Notes

13.6.4.1 Cache Line Configuration Register

Writes to the Cache Line Configuration Register are allowed when the status is cache off (SCACTL.ENS = 0 for S-cache, CCACTL.ENC = 0 for C-cache).

13.6.4.2 Coherency

The coherency between the cache and internal SRAM must be guaranteed by software.

When allocating shared memory between the CPU and a bus master such as DMAC in the cache support area, invalidate the cache data as necessary.

13.6.4.3 Cacheability

When the cache is enabled, the cacheability attribute is determined from the default system address map of the Cortex-M or by using an Arm MPU that excludes 0x2800_0000 to 0x2FFF_FFFF area which is always treated as non-cacheable regardless of the default system address map or Arm MPU setting.

When using the default system address map, the cacheable attribution is determined as follows:

- 0x0000_0000 to 0x27FF_FFFF : Cacheable
- 0x2800_0000 to 0x2FFF_FFFF : Non-cacheable
- 0x3000_0000 to 0x3FFF_FFFF : Cacheable
- 0x4000_0000 to 0x5FFF_FFFF : Non-cacheable

- 0x6000_0000 to 0x9FFF_FFFF : Cacheable
- 0xA000_0000 to 0xFFFF_FFFF : Non-cacheable

Note: If you use QSPI, it is recommended that you use the MAIR_ATTR method to determine the I/O register area of the QSPI.

When not using the default system address map, MAIR_ATTR used for each MPU region determines the cacheable attribution as follows:

- MAIR_ATTR[7:4] = 0000b : Non-cacheable (device memory)
- MAIR_ATTR[7:4] = 0100b : Non-cacheable (normal memory)
- MAIR_ATTR[7:4] = 1010b : Cacheable
- Other settings are not supported in the MCU.

Note: In case of accessing the following areas, the area must be set to non-cacheable:

- Peripheral I/O register area (0x4000_0000 to 0x5FFF_FFFF)
- I/O register area of QSPI (0x6400_0000 to 0x67FF_FFFF)

See the ARM Limited, *ARM v8-M Architecture Reference Manual*.

14. Memory Protection Unit (MPU)

14.1 Overview

The MCU has one Memory Protection Unit (MPU).

Table 14.1 lists the MPU specifications, and Table 14.2 shows the behavior on detection of each MPU error.

Table 14.1 MPU specifications

Classification	Module/Function	Specifications
Illegal memory access	Arm® Cortex®-M33 CPU	• Arm CPU has a default memory map. If the CPU makes an illegal access, an exception interrupt occurs • The MPU can change a default memory map.
Memory protection	Arm MPU	Memory protection function for the CPU: • (8+8) region MPU with sub regions and background region for secure and non-secure.
	Bus master MPU	Memory protection function for each bus master except for the CPU: • DMAC/DTC: 8 regions

Table 14.2 Behavior on MPU error detection

MPU type	Notification type	Error Response by HRESP signal of AHB I/F	Bus Access on error detection	Storing of error access information
Arm MPU	• Hard fault	Not supported	• Does not correctly write access • Does not correctly read access	Stored in the Cortex-M33 processor
Bus Master MPU	• Reset or Non-maskable interrupts • Hard fault	Supported	• Write access ignore • Read access is read as 0	Stored

For information on error access for the Arm MPU, see section 14.4. References. For information on error access for other MPUs, see section 13.3. Register Descriptions and section 13.4. Bus Error Monitoring Section in section 13, Buses.

14.2 Arm MPU

The Arm MPU monitors the addresses accessed by the CPU across the entire address space (0x0000_0000 to 0xFFFF_FFFF) and provides support for:

- (8 + 8) protected regions
- When memory regions overlap, the processor generates a fault if a core access hits the overlapping regions
- Setting access permissions to protected region (read, write, execution)
- Export of memory attributes to the system.

Arm MPU mismatches and permission violations invoke the programmable-priority MemManage fault (Hard Fault) handler. For details, see section 14.4. References.

14.3 Bus Master MPU

The bus master MPU monitors the addresses accessed by the bus masters in the entire address space (0x0000_0000 to 0xFFFF_FFFF). Access-control information can be set up to 8 regions in DMAC/DTC and monitor for access to each region is in accord with this information.

If access to a protected region is detected, the bus master MPU generates an internal reset or a non-maskable interrupt. For information on error access, see section 13.3. Register Descriptions and section 13.4. Bus Error Monitoring Section in section 13, Buses.

The access control information for each area consists of protected/not-protected to read or write.

Table 14.3 lists the specifications of the bus master MPU.

Table 14.3 Bus master MPU specifications

Parameter	Description
Protected master groups	• DMAC, DTC
Protected regions	0x0000_0000 to 0xFFFF_FFFF
Number of regions	• DMAC/DTC: 8 regions
Address specification for individual regions	• Specifying start and end address for individual regions
Enable or disable setting for memory protection in individual regions	• Enabling or disabling setting for the associated region
Access-control settings for individual regions	• Permission for read and write
Operation on error detection	• Reset or non-maskable interrupts
Register protection	• Protecting registers from illegal writes
TrustZone Filter	• DMAC: Security attribution can be set for each regions

14.3.1 Register Descriptions

Bus access must be stopped before writing to MPU registers.

14.3.1.1 MMPUSARA : Master Memory Protection Unit Security Attribution Register A

Base address: CPSCU = 0x4000_8000

Offset address: 0x130

Bit position:	31	30	29	28	27	26	25	24	23	22	21	20	19	18	17	16
Bit field:	—	—	—	—	—	—	—	—	—	—	—	—	—	—	—	—
Value after reset:	1	1	1	1	1	1	1	1	1	1	1	1	1	1	1	1

Bit position:	15	14	13	12	11	10	9	8	7	6	5	4	3	2	1	0
Bit field:	—	—	—	—	—	—	—	—	MMPUASA7	MMPUASA6	MMPUASA5	MMPUASA4	MMPUASA3	MMPUASA2	MMPUASA1	MMPUASA0
Value after reset:	1	1	1	1	1	1	1	1	1	1	1	1	1	1	1	1

Bit	Symbol	Function	R/W
7:0	MMPUASAn	MMPUA Security Attribution (n = 0 to 7) 0: Secure 1: Non-Secure	R/W
31:8	—	These bits are read as 1.	R*1

Note: Only Secure access can write to this register. Both Secure access and Non-secure read access are allowed but Non-secure write access is not allowed and TrustZone access error is not generated.

Note: This register is write-protected by PRCR register.

Note 1. This bit is read only.

MMPUASAn bits (MMPUA Security Attribution (n = 0 to 7))

The MMPUASAn bits specify the security attributes of registers for the Bus Master MPU Region Setting register. The target registers are:

- MMPUSDMACn (n = 0 to 7)
- MMPUEDMACn (n = 0 to 7)
- MMPUACDMACn (n = 0 to 7)

14.3.1.2 MMPUSARB : Master Memory Protection Unit Security Attribution Register B

Base address: CPSCU = 0x4000_8000

Offset address: 0x134

Bit position:	31	30	29	28	27	26	25	24	23	22	21	20	19	18	17	16
Bit field:	—	—	—	—	—	—	—	—	—	—	—	—	—	—	—	—
Value after reset:	1	1	1	1	1	1	1	1	1	1	1	1	1	1	1	1

Bit position:	15	14	13	12	11	10	9	8	7	6	5	4	3	2	1	0
Bit field:	—	—	—	—	—	—	—	—	—	—	—	—	—	—	—	MMPUBSA0
Value after reset:	1	1	1	1	1	1	1	1	1	1	1	1	1	1	1	1

Bit	Symbol	Function	R/W
0	MMPUBSA0	MMPUB Security Attribution 0: Secure 1: Non-Secure	R/W
31:1	—	These bits are read as 1.	R*1

Note: Only Secure access can write to this register. Both Secure access and Non-secure read access are allowed but Non-secure write access is not allowed and TrustZone access error is not generated.

Note: This register is write-protected by PRCR register.

Note 1. This bit is read-only.

MMPUBSA0 bit (MMPUB Security Attribution)

The MMPUBSA0 bit specifies the security attributes of registers for the Bus Master MPU Region Setting register, Protect register, and OAD register. The target registers are:

- MMPUENDMAC
- MMPUENPTDMAC
- MMPURPTDMAC
- MMPURPTDMAC_SEC
- MMPUOAD
- MMPUOADPT

The Secure user provides a Secure API to Non-secure user for the modification of the MMPURPTDMAC value when MMPUBSA0 bit is set to 0 (Secure).

14.3.1.3 MMPUSDMACn : MMPU Start Address Register for DMAC (n = 0 to 7)

Base address: RMPU = 0x4000_0000

Offset address: 0x0204 + 0x010 × n

Bit position:	31																									5				0
Bit field:	MMPUS[31:5]																										—	—	—	—	—
Value after reset:	x	x	x	x	x	x	x	x	x	x	x	x	x	x	x	x	x	x	x	x	x	x	x	x	x	x	0	0	0	0	0

Bit	Symbol	Function	R/W
4:0	—	These bits are read as 0. The write value should be 0.	R/W
31:5	MMPUS[31:5]	Region start address register Address where the region starts, for use in region determination	R/W

Note: If the security attribution is configured as Secure:
- Secure access and Non-secure read access are allowed
- Non-secure write access is ignored, and TrustZone access error is not generated.

If the security attribution is configured as Non-secure:
- Secure and Non-secure access are allowed.

The MMPUSDMACn (n = 0 to 7) register specifies the start address where the region starts.

This register requires word access. Byte access and half word access is prohibited. When byte access and half word access is executed, operation is not guaranteed.

Regions set by MMPUSDMACn (n = 0 to 7), MMPUEDMACn (n = 0 to 7) and MMPUACDMACn (n = 0 to 7) registers, can be set for a secure access or a non-secure access with the MMPUSARA register. If the corresponding MMPUSARA.MMPUASAn (n = 0 to 7) bit is set to 1, only non-secure access is permitted for that region. On the other hand, if the corresponding MMPUSARA.MMPUASAn (n = 0 to 7) bit is set to 0, only secure access is permitted for that region.

14.3.1.4 MMPUEDMACn : MMPU End Address Register for DMAC (n = 0 to 7)

Base address: RMPU = 0x4000_0000

Offset address: 0x0208 + 0x010 × n

Bit position:	31																									5					0
Bit field:	MMPUE[31:5]																									—	—	—	—	—
Value after reset:	x	x	x	x	x	x	x	x	x	x	x	x	x	x	x	x	x	x	x	x	x	x	x	x	x	1	1	1	1	1

Bit	Symbol	Function	R/W
4:0	—	These bits are read as 1. The write value should be 1.	R/W
31:5	MMPUE[31:5]	Region end address register Address where the region end, for use in region determination	R/W

Note: If the security attribution is configured as Secure:
- Secure access and Non-secure read access are allowed
- Non-secure write access is ignored, and TrustZone access error is not generated.

If the security attribution is configured as Non-secure:
- Secure and Non-secure access are allowed.

The MMPUEDMAC (n = 0 to 7) register specifies the end address where the region ends.

This register requires word access. Byte access and half word access is prohibited. When byte access and half word access is executed, operation is not guaranteed.

14.3.1.5 MMPUACDMACn : MMPU Access Control Register for DMAC (n = 0 to 7)

Base address: RMPU = 0x4000_0000

Offset address: 0x0200 + 0x010 × n

Bit position:	15	14	13	12	11	10	9	8	7	6	5	4	3	2	1	0
Bit field:	—	—	—	—	—	—	—	—	—	—	—	—	—	WP	RP	ENABLE
Value after reset:	0	0	0	0	0	0	0	0	0	0	0	0	0	0	0	0

Bit	Symbol	Function	R/W
0	ENABLE	Region Enable 0: DMAC region n unit is disabled 1: DMAC region n unit is enabled	R/W
1	RP	Read Protection 0: Read permission 1: Read protection	R/W
2	WP	Write Protection 0: Write permission 1: Write protection	R/W
15:3	—	These bits are read as 0. The write value should be 0.	R/W

Note: If the security attribution is configured as Secure:
- Secure access and Non-secure read access are allowed
- Non-secure write access is ignored, and TrustZone access error is not generated.

If the security attribution is configured as Non-secure:
- Secure and Non-secure access are allowed.

Region n unit sets the ENABLE bit, the RP bit, and the WP bit each.

ENABLE bit (Region Enable)

The ENABLE bit controls the enable or disable of DMAC/DTC region n (n = 0 to 7) unit.

When the ENABLE bit is set to 1, the RP bit and the WP bit control access permission for read and write protection to MMPUSDMACn (n = 0 to 7) and MMPUEDMACn (n = 0 to 7).

When the ENABLE bit is set to 0, access to DMAC region n (n = 0 to 7) is the outside region.

RP bit (Read Protection)

The RP bit enables or disables read protection of DMAC/DTC region n (n = 0 to 7).

When the ENABLE bit is set to 1, the RP bit is available.

WP bit (Write Protection)

The WP bit enables or disables write protection of DMAC/DTC region n (n = 0 to 7).

When the ENABLE bit is set to 1, the WP bit is available.

Table 14.4 Function of Region Control Circuit for DMAC

MMPUACDMACn (n = 0 to 7)			Access	Region	Output of DMAC region n unit (n = 0 to 7)
ENABLE	RP	WP			
0	—	—	Read	—	Outside region
			Write		Outside region
1	0	0	Read	Inside	Permitted region
				Outside	Outside region
			Write	Inside	Permitted region
				Outside	Outside region
	0	1	Read	Inside	Permitted region
				Outside	Outside region
			Write	Inside	Protection region
				Outside	Outside region
	1	0	Read	Inside	Protection region
				Outside	Outside region
			Write	Inside	Permitted region
				Outside	Outside region
	1	1	Read	Inside	Protection region
				Outside	Outside region
			Write	Inside	Protection region
				Outside	Outside region

Note: Each region of DMAC/DTC are set for secure access and non-secure access by MMPUSARA register. In this case, non-secure regions in secure access and secure regions in non-secure access are outside regions.

Table 14.5 Function of Master Control Circuit for DMAC

MMPUENDMAC ENABLE	Output of DMAC region 0 unit	Output of DMAC region 1 unit	Output of DMAC region 2-7 unit	Function of DMAC
1	Protected region	Don't care	Don't care	Generate error
	Don't care	Protected region	Don't care	Generate error
	Don't care	Don't care	Protected region	Generate error
	Outside region	Outside region	Outside region	Generate error
Other cases				No error

A master MPU error occurs on the following conditions:

1. MMPUENDMAC.ENABLE = 1, and output of one or more region n unit is protected region.
2. MMPUENDMAC.ENABLE = 1, and output of all region n unit are outside region.

Other cases are handled as permitted region.

14.3.1.6 MMPUENDMAC : MMPU Enable Register for DMAC

Base address: RMPU = 0x4000_0000

Offset address: 0x0100

Bit position:	15	14	13	12	11	10	9	8	7	6	5	4	3	2	1	0
Bit field:	KEY[7:0]								—	—	—	—	—	—	—	ENABLE
Value after reset:	0	0	0	0	0	0	0	0	0	0	0	0	0	0	0	0

Bit	Symbol	Function	R/W
0	ENABLE	Bus Master MPU of DMAC enable 0: Bus Master MPU of DMAC is disabled 1: Bus Master MPU of DMAC is enabled	R/W
7:1	—	These bits are read as 0. The write value should be 0.	R/W
15:8	KEY[7:0]	Key Code These bits enable or disable writes to the ENABLE bit.	W

Note: If the security attribution is configured as Secure:
- Secure access and Non-secure read access are allowed
- Non-secure write access is ignored, and TrustZone access error is not generated.

If the security attribution is configured as Non-secure:
- Secure and Non-secure access are allowed.

Note: It is necessary to write by half word access.
Byte write access is prohibited. When byte write access is executed, operation is not guaranteed.

ENABLE bit (Bus Master MPU of DMAC enable)

The ENABLE bit controls enable or disable of the bus master MPU function of each master group.

When the ENABLE bit is set to 1, MMPUACDMACn (n = 0 to 7) is valid. When the ENABLE bit is set to 0, MMPUACDMACn (n = 0 to 7) is invalid for all regions. The bus master MPU function sets the ENABLE bit of each master group. When the ENABLE bit is set, write 0xA5 in KEY[7:0] at the same time.

KEY[7:0] bits (Key Code)

The KEY[7:0] bits enable or disable writing to the ENABLE bit. When writing to the ENABLE bit, write 0xA5 in KEY[7:0] bits at the same time. When values other than 0xA5 are written to KEY[7:0] bits, the ENABLE bit is not updated. The KEY[7:0] bits are always read as 0x00.

14.3.1.7 MMPUENPTDMAC : MMPU Enable Protect Register for DMAC

Base address: RMPU = 0x4000_0000

Offset address: 0x0104

Bit position:	15	14	13	12	11	10	9	8	7	6	5	4	3	2	1	0
Bit field:	KEY[7:0]								—	—	—	—	—	—	—	PROTECT
Value after reset:	0	0	0	0	0	0	0	0	0	0	0	0	0	0	0	0

Bit	Symbol	Function	R/W
0	PROTECT	Protection of register 0: MMPUENDMAC register writes are possible 1: MMPUENDMAC register writes are protected. Read is possible	R/W
7:1	—	These bits are read as 0. The write value should be 0.	R/W
15:8	KEY[7:0]	Key Code These bits enable or disable writes to the PROTECT bit.	W

Note: If the security attribution is configured as Secure:
- Secure access and Non-secure read access are allowed
- Non-secure write access is ignored, and TrustZone access error is not generated.

If the security attribution is configured as Non-secure:
- Secure and Non-secure access are allowed.

Note: It is necessary to write by half word access.
Byte write access is prohibited. When byte write access is executed, operation is not guaranteed.

PROTECT bit (Protection of register)

The PROTECT bit enables or disables writes to the MMPUENDMAC register.

When writing to the PROTECT bit, write 0xA5 in KEY[7:0] at the same time.

KEY[7:0] bits (Key Code)

The KEY[7:0] bits enable or disable writes to the PROTECT bit. When writing to the PROTECT bit, write 0xA5 in KEY[7:0] at the same time. When values other than 0xA5 are written in KEY[7:0] bits, the PROTECT bit is not updated. The KEY[7:0] bits are always read as 0x00.

14.3.1.8 MMPURPTDMAC : MMPU Regions Protect Register for DMAC

Base address: RMPU = 0x4000_0000

Offset address: 0x0108

Bit position:	15	14	13	12	11	10	9	8	7	6	5	4	3	2	1	0
Bit field:	KEY[7:0]								—	—	—	—	—	—	—	PROTECT
Value after reset:	0	0	0	0	0	0	0	0	0	0	0	0	0	0	0	0

Bit	Symbol	Function	R/W
0	PROTECT	Protection of register 0: Bus Master MPU register for DMAC writing is possible 1: Bus Master MPU register for DMAC writing is protected. Read is possible	R/W
7:1	—	These bits are read as 0. The write value should be 0.	R/W
15:8	KEY[7:0]	Key Code These bits enable or disable writes to the PROTECT bit.	W

Note: If the security attribution is configured as Secure:
- Secure access and Non-secure read access are allowed
- Non-secure write access is ignored, and TrustZone access error is not generated.

If the security attribution is configured as Non-secure:
- Secure and Non-secure access are allowed.

Note: It is necessary to write by half word access.
Byte write access is prohibited. When byte write access is executed, operation is not guaranteed.

PROTECT bit (Protection of register)

The PROTECT bit enables or disables writes to the associated registers to be protected.

MMPURPTDMAC.PROTECT controls the following registers:

- MMPUSDMACn (n = 0 to 7) of non-secure program
- MMPUEDMACn (n = 0 to 7) of non-secure program
- MMPUACDMACn (n = 0 to 7) of non-secure program

When writing to the PROTECT bit, write 0xA5 simultaneously to the KEY[7:0] bits, using halfword access.

KEY[7:0] bits (Key Code)

The KEY[7:0] bits enable or disable writes to the PROTECT bit. When writing to the PROTECT bit, write 0xA5 simultaneously to the KEY[7:0] bits. When other values are written, the PROTECT bit is not updated.

The KEY[7:0] bits always read as 0x00.

14.3.1.9 MMPURPTDMAC_SEC : MMPU Regions Protect Register for DMAC Secure

Base address: RMPU = 0x4000_0000

Offset address: 0x010C

Bit position:	15	14	13	12	11	10	9	8	7	6	5	4	3	2	1	0
Bit field:	KEY[7:0]								—	—	—	—	—	—	—	PROTECT
Value after reset:	0	0	0	0	0	0	0	0	0	0	0	0	0	0	0	0

Bit	Symbol	Function	R/W
0	PROTECT	Protection of register 0: Bus master MPU register for DMAC secure writes are possible 1: Bus master MPU register for DMAC secure writes are protected. Read is possible	R/W
7:1	—	These bits are read as 0. The write value should be 0.	R/W
15:8	KEY[7:0]	Key Code These bits enable or disable writes to the PROTECT bit.	W

Note: If the security attribution is configured as Secure:
- Secure access and Non-secure read access are allowed
- Non-secure write access is ignored, and TrustZone access error is not generated.

If the security attribution is configured as Non-secure:
- Secure and Non-secure access are allowed.

Note: It is necessary to write by half word access.
Byte write access is prohibited. When byte write access is executed, operation is not guaranteed.

PROTECT bit (Protection of register)

The PROTECT bit enables or disables writes to the associated registers to be protected.

MMPURPTDMAC_SEC.PROTECT controls the following registers:

- MMPUSDMACn (n = 0 to 7) of Secure program
- MMPUEDMACn (n = 0 to 7) of Secure program
- MMPUACDMACn (n = 0 to 7) of Secure program

When writing to the PROTECT bit, write 0xA5 simultaneously to the KEY[7:0] bits, using halfword access.

KEY[7:0] bits (Key Code)

The KEY[7:0] bits enable or disable writes to the PROTECT bit. When writing to the PROTECT bit, write 0xA5 simultaneously to the KEY[7:0] bits. When other values are written, the PROTECT bit is not updated.

The KEY[7:0] bits are always read as 0x00.

14.3.1.10 MMPUOAD : MMPU Operation After Detection Register

Base address: RMPU = 0x4000_0000

Offset address: 0x0000

Bit position:	15	14	13	12	11	10	9	8	7	6	5	4	3	2	1	0
Bit field:	KEY[7:0]								—	—	—	—	—	—	—	OAD
Value after reset:	0	0	0	0	0	0	0	0	0	0	0	0	0	0	0	0

Bit	Symbol	Function	R/W
0	OAD	Operation After Detection 0: Non-maskable interrupt 1: Reset	R/W
7:1	—	These bits are read as 0. The write value should be 0.	R/W
15:8	KEY[7:0]	Key Code This bit enables or disables writes to the OAD bit.	W

Note: If the security attribution is configured as Secure:
- Secure access and Non-secure read access are allowed
- Non-secure write access is ignored, and TrustZone access error is not generated.

If the security attribution is configured as Non-secure:
- Secure and Non-secure access are allowed.

Note: It is necessary to write by half word access.
Byte write access is prohibited. When byte write access is executed, operation is not guaranteed.

OAD bit (Operation After Detection)

The OAD bit is specified to generate either reset or non-maskable interrupt when the access to the protect region is detected by the BUS Master MPU.

When writing to the OAD bit, write 0xA5 simultaneously to the KEY[7:0] bits using halfword access.

KEY[7:0] bits (Key Code)

The KEY[7:0] bits enable or disable writing to the OAD bit. When writing to the OAD bit, write 0xA5 simultaneously to the KEY[7:0] bits. When other values are written, the OAD bit is not updated.

The KEY[7:0] bits always read as 0x00.

14.3.1.11 MMPUOADPT : MMPU Operation After Detection Protect Register

Base address: RMPU = 0x4000_0000

Offset address: 0x0004

Bit position:	15	14	13	12	11	10	9	8	7	6	5	4	3	2	1	0
Bit field:	KEY[7:0]								—	—	—	—	—	—	—	PROTECT
Value after reset:	0	0	0	0	0	0	0	0	0	0	0	0	0	0	0	0

Bit	Symbol	Function	R/W
0	PROTECT	Protection of register 0: MMPUOAD register writes are possible 1: MMPUOAD register writes are protected. Read is possible	R/W
7:1	—	These bits are read as 0. The write value should be 0.	R/W
15:8	KEY[7:0]	Key code These bits enable or disable writes to the PROTECT bit.	W

Note: If the security attribution is configured as Secure:
- Secure access and Non-secure read access are allowed
- Non-secure write access is ignored, and TrustZone access error is not generated.

If the security attribution is configured as Non-secure:
- Secure and Non-secure access are allowed.

Note: It is necessary to write by half word access.
Byte write access is prohibited. When byte write access is executed, operation is not guaranteed.

PROTECT bit (Protection of register)

The PROTECT bit enables or disables writes to the associated registers to be protected.

MMPUOADPT.PROTECT controls the following register:

- MMPUOAD

When the PROTECT bit is set simultaneously, write 0xA5 to the KEY[7:0] bits using half word access.

KEY[7:0] bits (Key code)

The KEY[7:0] bits enable or disable writes to the PROTECT bit. When writing to the PROTECT bit simultaneously, write 0xA5 to the KEY[7:0] bits. When other values are written to the KEY[7:0] bits, the PROTECT bit is not updated. The KEY[7:0] bits are always read as 0x00.

14.3.2 Operation

14.3.2.1 Memory protection

The bus master MPU monitors memory access using control settings made individually for the access control regions. If access to a protected region is detected, the bus master MPU generates a memory protection error.

Bus Master MPU can be set for up to 8 protection regions. It is protection region when set up of permission region and protection region overlaps. It is protection region when set up of two protection region overlaps.

Bus Master MPU has master groups of DMAC/DTC.

Memory protection checks the address of the bus which the master group unified. Therefore, all the access of a master group is detected by memory protection.

The region setting registers of the Bus Master MPU for DMAC/DTC can be set for secure access and non-secure access using the MMPUSARA register. Make secure access and non-secure access settings the same for each DMAC/DTC channel and the corresponding region setting registers of the Bus Master MPU.

Bus Master MPU is permission of all regions after reset. All region is protected by setting MMPUENDMAC.ENABLE = 1.

Each region sets up a permission region on the protection region. If access to the protected region is detected, Bus Master MPU will generate an error.

Figure 14.1 shows the use case of a bus master MPU.

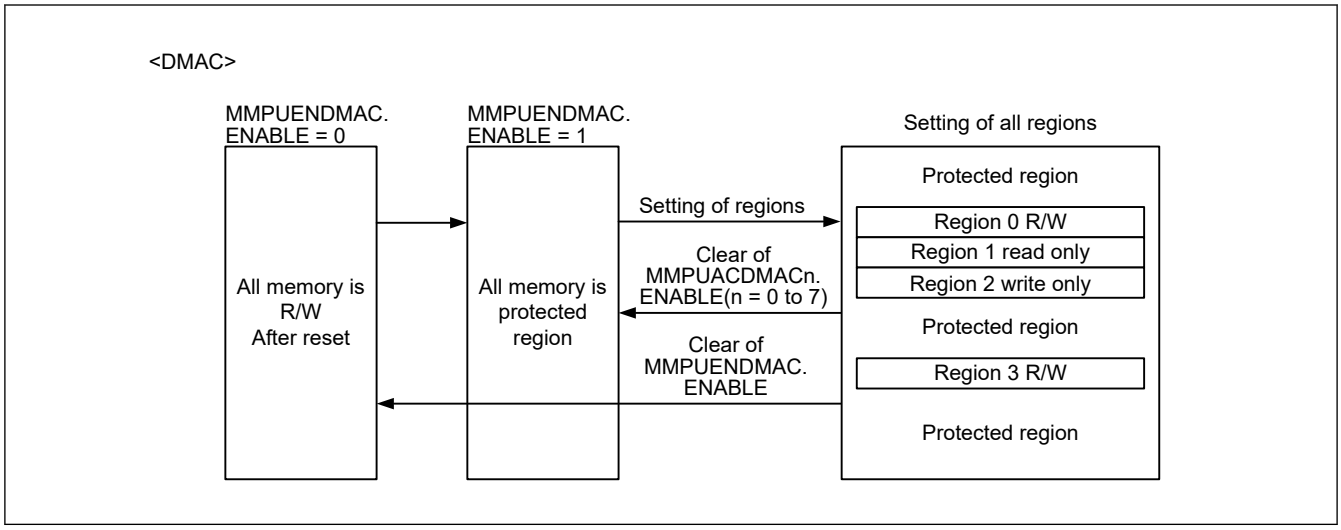

Figure 14.1 Use case of bus master MPU

Figure 14.2 shows the access permission or protection by the overlapping bus master MPU regions.

Access control for the overlapping regions is as follows:

- The region is handled as a protected region when output of one or more region units is a protected region
- The region is handled as a protected region when output of all region units is outside of the regions
- Other cases are handled as permitted regions.

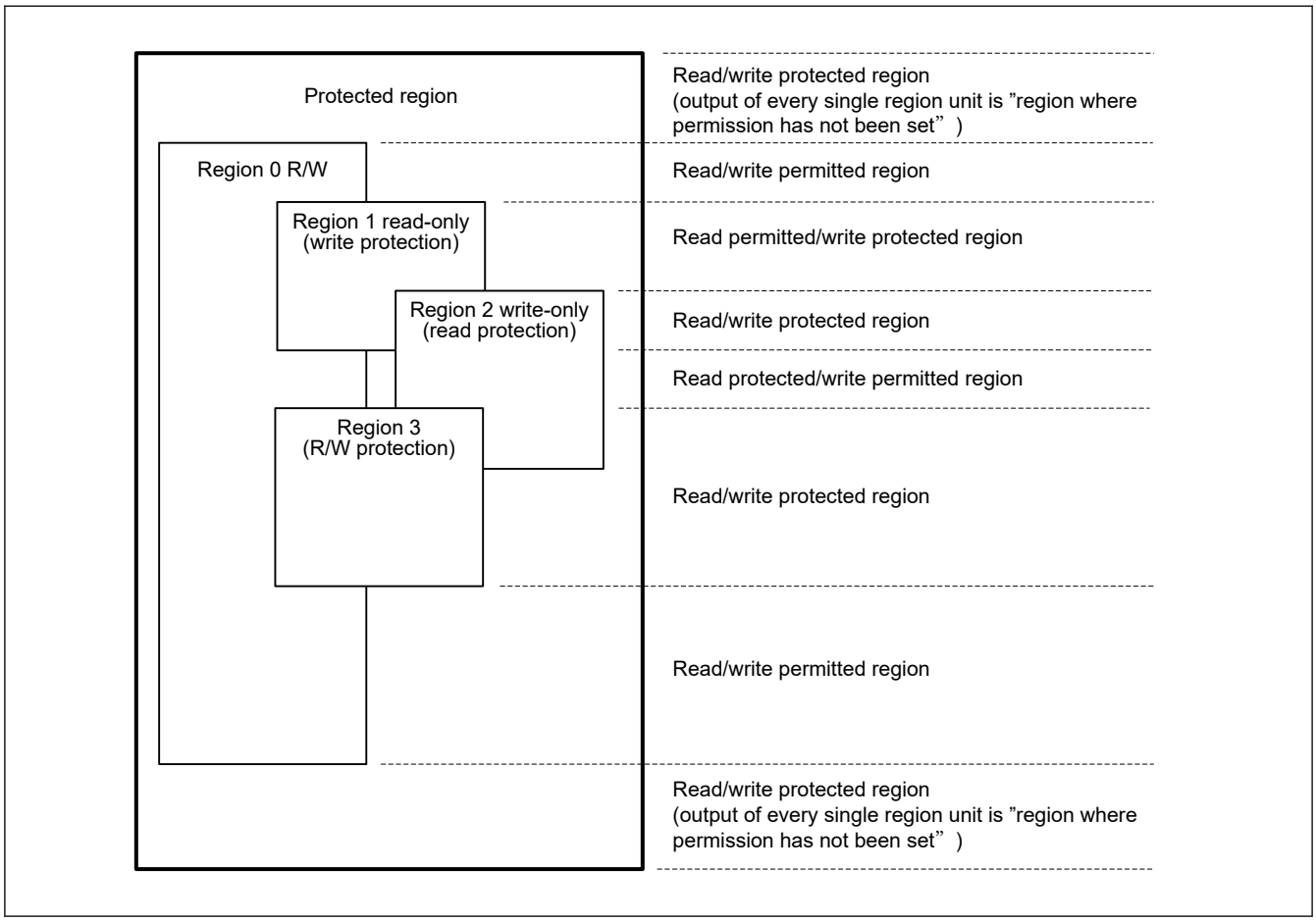

Figure 14.2 Access permission or protection by overlap of the bus master MPU regions

Figure 14.3 shows the register setting flow after reset. During this register setting, stop all bus masters except the CPU.

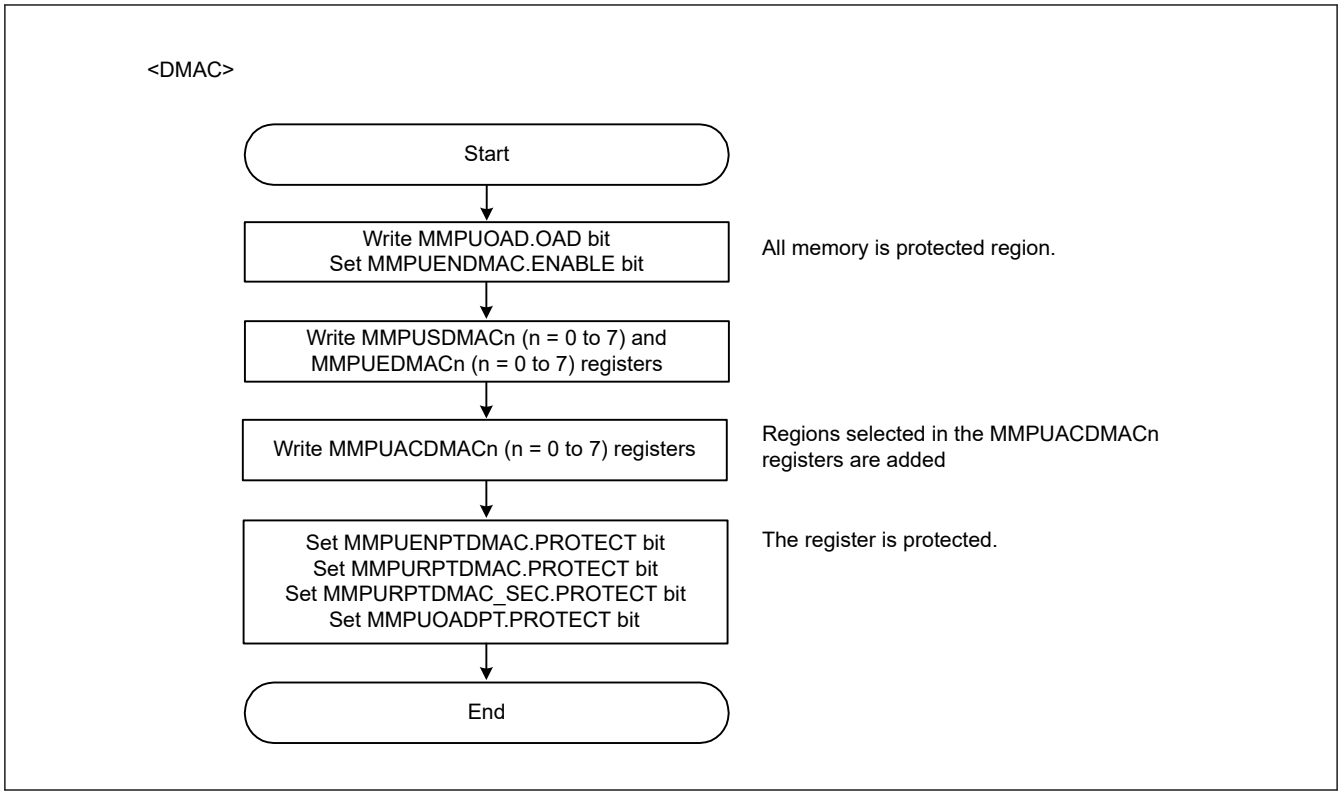

Figure 14.3 Register setting flow of bus master MPU after reset

Figure 14.4 shows the register setting flow for adding regions. During this register setting, stop all masters except the CPU.

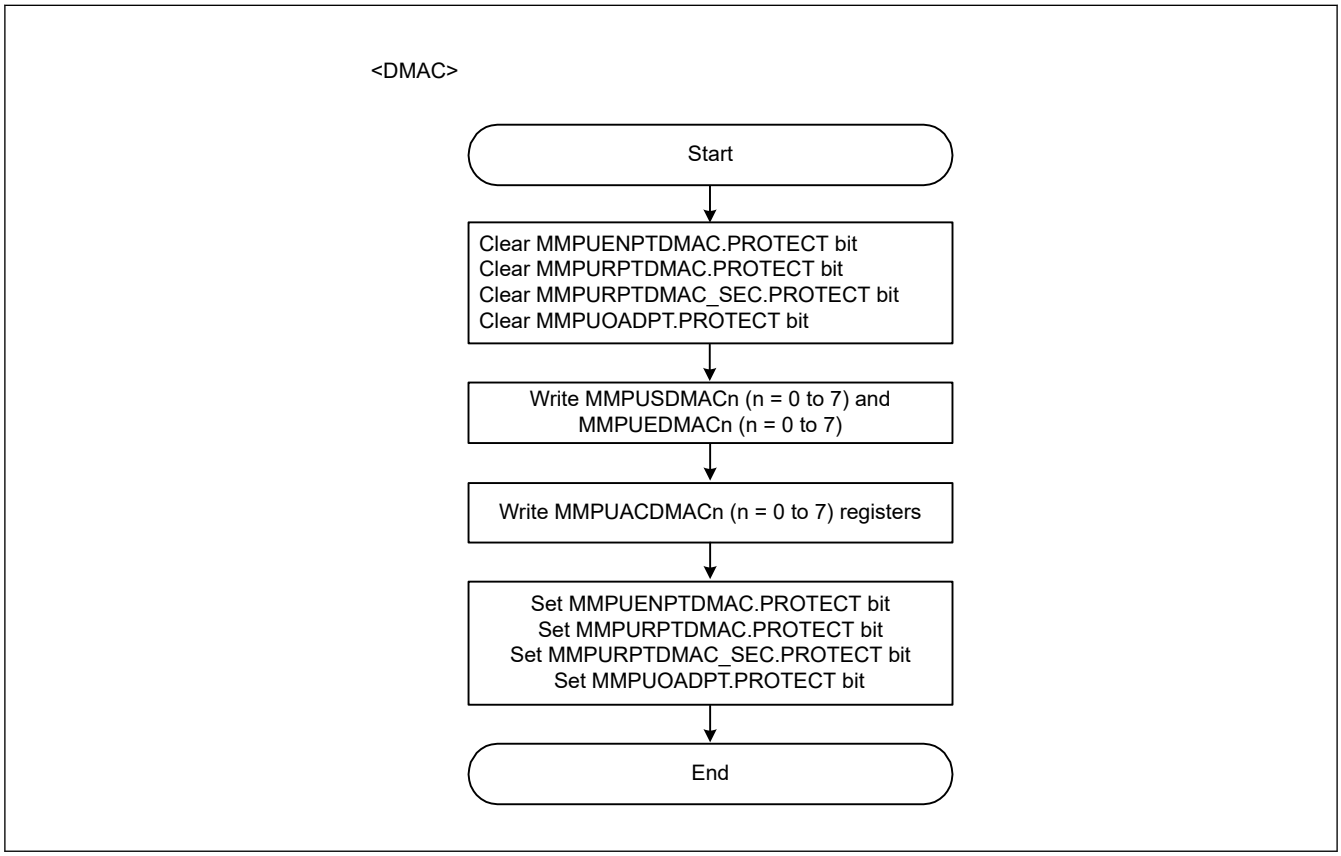

Figure 14.4 Register setting flow for region addition

14.3.2.2 Protecting the registers

Registers related to the Bus Master MPU can be protected with the PROTECT bit in the MMPUENPTDMA, MMPURPTDMAC, MMPURPTDMAC_SEC and MMPUOADPT registers.

Table 14.6 PROTECT bit and Protected target registers

PROTECT bit	Protect target registers
MMPUENPTDMAC.PROTECT	MMPUENDMAC
MMPURPTDMAC.PROTECT	The following registers set to Non-Secure by MMPUSARA.MMPUASAn (n = 0 to 7). MMPUSDMACn (n = 0 to 7) MMPUEDMACn (n = 0 to 7) MMPUACDMACn (n = 0 to 7)
MMPURPTDMAC_SEC.PROTECT	The following registers set to Secure by MMPUSARA.MMPUASAn (n = 0 to 7). MMPUSDMACn (n = 0 to 7) MMPUEDMACn (n = 0 to 7) MMPUACDMACn (n = 0 to 7)
MMPUOADPT.PROTECT	MMPUOAD

14.3.2.3 Memory protection error

If access to a protected region is detected, the bus master MPU generates an error. Set the OAD bit to select whether the error is reported as a non-maskable interrupt or a reset.

The non-maskable interrupt status is indicated in ICU.NMISR.BUSMST. For details, see section 12, Interrupt Controller Unit (ICU). The reset status is indicated in SYSTEM.RSTSR1.BUSMRF. For details, see section 5, Resets.

14.4 References

1. *Arm®v8-M Architecture Reference Manual* (ARM DDI0553B.g)
2. *Arm® Cortex®-M33 Processor Technical Reference Manual* (ARM 100230_0004_00_en)

15. DMA Controller (DMAC)

15.1 Overview

The MCU includes an 8-channel direct memory access controller (DMAC) that can transfer data without intervention from the CPU. When a DMA transfer request is generated, the DMAC transfers data stored at the transfer source address to the transfer destination address.

Table 15.1 lists the DMAC specifications, and Figure 15.1 shows a block diagram of the DMAC.

Table 15.1 DMAC specifications (1 of 2)

Item		Description
Number of channels		8 channels (DMACn (n = 0 to 7))
Transfer space		4 GB (0x00000000 to 0xFFFFFFFF excluding reserved areas)
Maximum transfer volume		64 M data (Maximum number of transfers in block transfer mode: 1,024 data/block × 65,536 blocks)
DMAC activation source		Selectable for each channel: ● Software trigger ● Interrupt requests from peripheral modules or trigger from external interrupt input pins.*1
Channel priority		Channel 0 > Channel 1 > Channel 2 > Channel 3… > Channel 7 (Channel 0: Highest)
Transfer data	Single data	Bit length: 8, 16, 32 bits
	Block size	Number of data: 1 to 1,024
Transfer mode	Normal transfer mode	● One data transfer by one DMA transfer request ● Free-running function (setting in which total number of data transfers is not specified) settable
	Repeat transfer mode	● One data transfer by one DMA transfer request ● Program returns to the transfer start address on completion of the repeat size of data transfer specified for the transfer source or destination. ● Maximum settable repeat size: 1,024 ● Selectable free-running function
	Repeat-block transfer mode	● One block data transfer by one DMA transfer request ● Maximum settable block size: 1,024 ● Block transfer can be repeated ● Maximum settable repeat size: 64K ● Selectable free-running function
	Block transfer mode	● One block data transfer by one DMA transfer request ● Maximum settable block size: 1,024 data ● Selectable free-running function
Selective functions	Extended repeat area function	● Function in which data can be transferred by repeating the address values in the specified range with the upper bit values in the transfer address register fixed ● Area of 2 bytes to 128 Mbytes separately settable as extended repeat area for transfer source and destination
Processing on DMAC transfer error		● When a DMAC transfer error occurs, the transfer on the channel that caused the error is stopped ● A request to clear the register for activation request of DMAC error channel is sent to ICU
Interrupt (DMACn_INT)	Transfer end interrupt	Generated on completion of transferring data volume specified by the transfer counter
	Transfer escape end interrupt	● Generated when the repeat size of data transfer is completed ● Generated when the source address extended repeat area overflows ● Generated when the destination address extended repeat area overflows
Interrupt (DMA_TRANSERR)	Error response detection interrupt	Generated when the DMAC transfer error occurs
Event link activation (DMACn_INT)		An event link request is generated after each data transfer (for block transfer, after each block is transferred)

Table 15.1 DMAC specifications (2 of 2)

Item	Description
Master TrustZone Filter	TrustZone violation area of Flash and SRAM is detected before a non-secure channel access the bus
Power consumption reduction function	Module-stop state can be set
TrustZone Filter	Security attribution can be set for each channels

Note: Security attribution Register of DMAC channel is described in ICU.ICUSARC.
Note 1. For details on DMAC activation sources, see Table 12.4 in section 12, Interrupt Controller Unit (ICU).

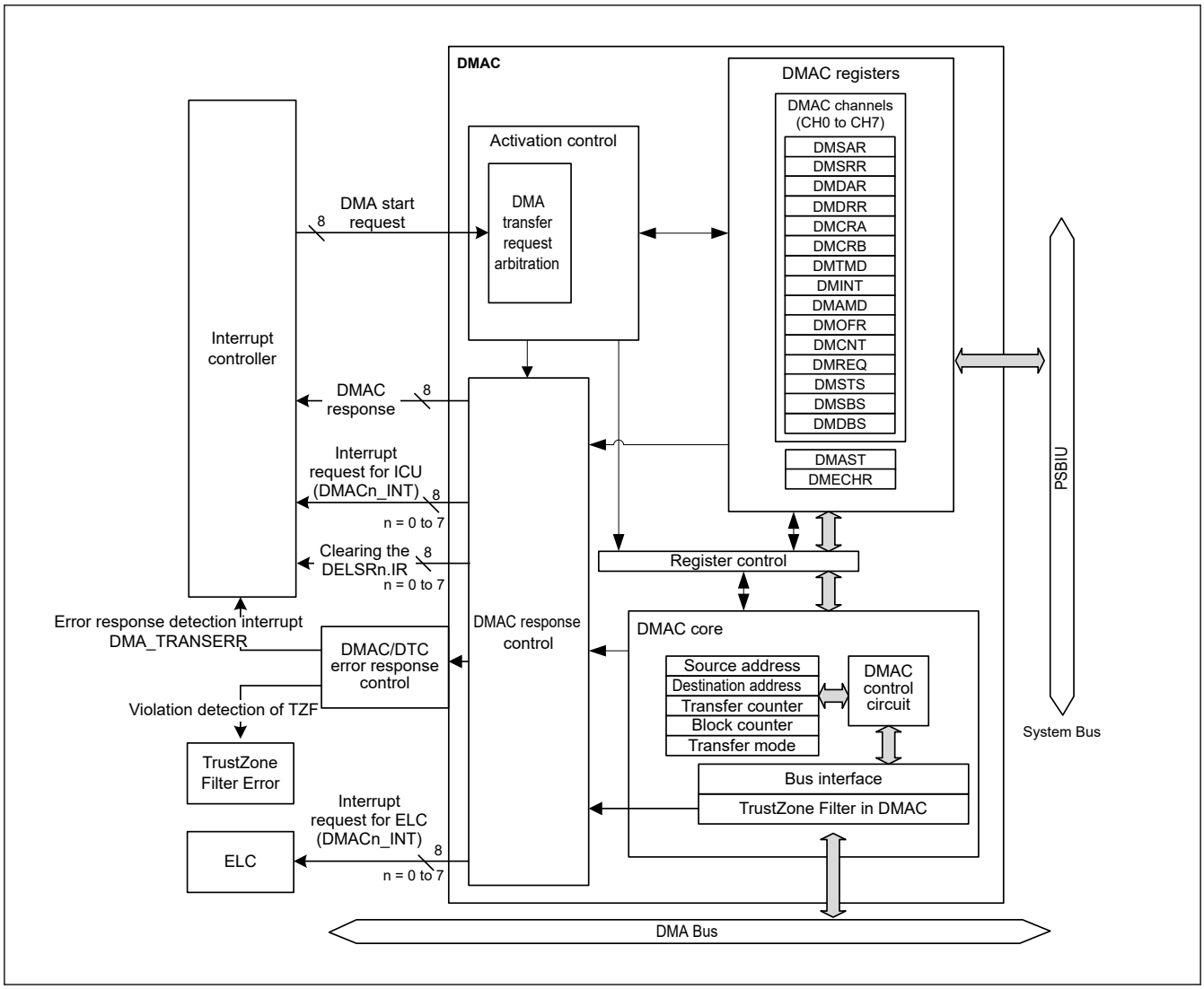

Figure 15.1 Block diagram of DMAC

15.2 Register Descriptions

15.2.1 DMACSAR : DMAC Controller Security Attribution Register

Base address: CPSCU = 0x4000_8000

Offset address: 0x34

Bit position:	31	30	29	28	27	26	25	24	23	22	21	20	19	18	17	16
Bit field:	—	—	—	—	—	—	—	—	—	—	—	—	—	—	—	—
Value after reset:	1	1	1	1	1	1	1	1	1	1	1	1	1	1	1	1

Bit position:	15	14	13	12	11	10	9	8	7	6	5	4	3	2	1	0
Bit field:	—	—	—	—	—	—	—	—	—	—	—	—	—	—	—	DMASTSA
Value after reset:	1	1	1	1	1	1	1	1	1	1	1	1	1	1	1	1

Bit	Symbol	Function	R/W
0	DMASTSA	DMAST Security Attribution 0: Secure 1: Non-secure	R/W
31:1	—	These bits are read as 1.	R/W

Note: Only Secure access can write to this register. Both Secure access and Non-secure read access are allowed but Non-secure write access is not allowed and TrustZone access error is not generated.

Note: This register is write-protected by PRCR register.

For DMAC, security attribution is set for each channel. However, this register only sets the DMAST register security attribute. The security attribution setting of each channel is described in the section 12.2.3. ICUSARC : Interrupt Controller Unit Security Attribution Register C.

DMASTSA bit (DMAST Security Attribution)

Security attributes of registers for DMAST. Do not write to DMASTSA bit while DMA transfer is enabled or a bus master is writing to the DMA registers.

15.2.2 DMSAR : DMA Source Address Register

Base address: DMACn = 0x4000_5000 + 0x0040 × n (n = 0 to 7)

Offset address: 0x00

Bit position:	31																															0
Bit field:																																
Value after reset:	0	0	0	0	0	0	0	0	0	0	0	0	0	0	0	0	0	0	0	0	0	0	0	0	0	0	0	0	0	0	0	0

Bit	Symbol	Function	R/W
31:0	n/a	Specifies the transfer source start address Setting range is 0x0000_0000 to 0xFFFF_FFFF (4 Gbytes).	R/W

Note: If the security attribution is configured as Secure:
- Secure access and Non-secure read access are allowed
- Non-secure write access is ignored, and TrustZone access error is not generated.

If the security attribution is configured as Non-secure:
- Secure and Non-secure access are allowed.

Set DMSAR while DMAC activation is disabled (DMAST.DMST = 0) or DMA transfer is disabled (DMCNT.DTE = 0).

Note: Address alignment in this register must match the Transfer Data Size value selected in the DMTMD.SZ bits.

15.2.3 DMSRR : DMA Source Reload Address Register

Base address: DMACn = 0x4000_5000 + 0x0040 × n (n = 0 to 7)

Offset address: 0x20

Bit position:	31																														0
Bit field:																															
Value after reset:	0	0	0	0	0	0	0	0	0	0	0	0	0	0	0	0	0	0	0	0	0	0	0	0	0	0	0	0	0	0	0

Bit	Symbol	Function	R/W
31:0	n/a	Specifies the transfer source reload address Setting range is 0x0000_0000 to 0xFFFF_FFFF (4 GB).	R/W

Note: If the security attribution is configured as Secure:
- Secure access and Non-secure read access are allowed
- Non-secure write access is ignored, and TrustZone access error is not generated.

If the security attribution is configured as Non-secure:
- Secure and Non-secure access are allowed.

Set DMSRR while DMAC activation is disabled (DMAST.DMST = 0) or DMA transfer is disabled (DMCNT.DTE = 0).

DMSRR is the initial value of DMSAR. In repeat-block transfer mode, DMSAR reloads the value of DMSRR after the specified transfer is finished.

In normal transfer mode, repeat transfer mode, and block transfer mode DMSRR is not used. The setting is invalid.

Note: Address alignment in this register must match the Transfer Data Size value selected in the DMTMD.SZ bits.

15.2.4 DMDAR : DMA Destination Address Register

Base address: DMACn = 0x4000_5000 + 0x0040 × n (n = 0 to 7)

Offset address: 0x04

Bit position:	31																														0
Bit field:																															
Value after reset:	0	0	0	0	0	0	0	0	0	0	0	0	0	0	0	0	0	0	0	0	0	0	0	0	0	0	0	0	0	0	0

Bit	Symbol	Function	R/W
31:0	n/a	Specifies the transfer destination start address Setting range is 0x0000_0000 to 0xFFFF_FFFF (4 Gbytes).	R/W

Note: If the security attribution is configured as Secure:
- Secure access and Non-secure read access are allowed
- Non-secure write access is ignored, and TrustZone access error is not generated.

If the security attribution is configured as Non-secure:
- Secure and Non-secure access are allowed.

Set DMDAR while DMAC activation is disabled (DMAST.DMST = 0) or DMA transfer is disabled (DMCNT.DTE = 0).

Note: Address alignment in this register must match the Transfer Data Size value selected in the DMTMD.SZ bits.

15.2.5 DMDRR : DMA Destination Reload Address Register

Base address: DMACn = 0x4000_5000 + 0x0040 × n (n = 0 to 7)

Offset address: 0x24

Bit position:	31																														0
Bit field:																															
Value after reset:	0	0	0	0	0	0	0	0	0	0	0	0	0	0	0	0	0	0	0	0	0	0	0	0	0	0	0	0	0	0	0

Bit	Symbol	Function	R/W
31:0	n/a	Specifies the transfer destination reload address Setting range is 0x0000_0000 to 0xFFFF_FFFF (4 Gbytes).	R/W

Note: If the security attribution is configured as Secure:
- Secure access and Non-secure read access are allowed
- Non-secure write access is ignored, and TrustZone access error is not generated.

If the security attribution is configured as Non-secure:
- Secure and Non-secure access are allowed.

Set DMDRR while DMAC activation is disabled (DMAST.DMST = 0) or DMA transfer is disabled (DMCNT.DTE = 0).

DMDRR is the initial value of DMDAR. In repeat-block transfer mode, DMDAR reloads the value of DMDRR after the specified transfer is finished.

In normal transfer mode, repeat transfer mode and block transfer mode, DMDRR is not used. The setting is invalid.

Note: Address alignment in this register must match the Transfer Data Size value selected in the DMTMD.SZ bits.

15.2.6 DMCRA : DMA Transfer Count Register

Base address: DMACn = 0x4000_5000 + 0x0040 × n (n = 0 to 7)

Offset address: 0x08

Bit position:	31	30	29	28	27	26	25	24	23	22	21	20	19	18	17	16
Bit field:	—	—	—	—	—	—	DMCRAH[9:0]									
Value after reset:	0	0	0	0	0	0	0	0	0	0	0	0	0	0	0	0

Bit position:	15	14	13	12	11	10	9	8	7	6	5	4	3	2	1	0
Bit field:	DMCRAL[15:0]															
Value after reset:	0	0	0	0	0	0	0	0	0	0	0	0	0	0	0	0

Bit	Symbol	Function	R/W
15:0	DMCRAL[15:0]	Lower bits of transfer count Specifies the number of transfer operations.	R/W
25:16	DMCRAH[9:0]	Upper bits of transfer count Specifies the number of transfer operations.	R/W
31:26	—	These bits are read as 0. The write value should be 0.	R/W

Note: If the security attribution is configured as Secure:
- Secure access and Non-secure read access are allowed
- Non-secure write access is ignored, and TrustZone access error is not generated.

If the security attribution is configured as Non-secure:
- Secure and Non-secure access are allowed.

Set the same value for DMCRAH and DMCRAL in repeat transfer mode, block transfer mode, and repeat-block transfer mode. Bits [15:10] are fixed to 0 in repeat transfer mode, block transfer mode, and repeat-block transfer mode.

(1) Normal Transfer Mode (DMTMD.MD[1:0] = 00b)

DMCRAL functions as a 16-bit transfer counter.

The number of transfer operations is one when the setting is 0x0001, and 65,535 when it is 0xFFFF. The value is decremented by one each time data is transferred.

When the setting is 0x0000, no specific number of transfer operations is set; data transfer is performed with the transfer counter stopped (free running function).

Free running function is not selected by DMTMD.TKP bit in normal transfer mode.

DMCRAH is not used in normal transfer mode. Write 0x0000 to DMCRAH.

(2) Repeat Transfer Mode (DMTMD.MD[1:0] = 01b)

DMCRAH specifies the repeat size and DMCRAL functions as a 10-bit transfer counter.

The number of transfer operations is one when the setting is 0x001, 1023 when it is 0x3FF, and 1024 when it is 0x000. In repeat transfer mode, a value in the range of 0x000 to 0x3FF (1 to 1024) can be set for DMCRAH and DMCRAL.

Setting bits [15:10] in DMCRAL is invalid. Write 0 to these bits.

The value in DMCRAL is decremented by one each time data is transferred until it reaches 0x000, at which the value in DMCRAH is loaded into DMCRAL.

(3) Block Transfer Mode (DMTMD.MD[1:0] = 10b)

DMCRAH specifies the block size and DMCRAL functions as a 10-bit block size counter.

The block size is one when the setting is 0x001, 1023 when it is 0x3FF, and 1024 when it is 0x000. In block transfer mode, a value in the range of 0x000 to 0x3FF can be set for DMCRAH and DMCRAL.

Setting bits [15:10] in DMCRAL is invalid. Write 0 to these bits.

The value in DMCRAL is decremented by one each time data is transferred until it reaches 0x000, at which the value in DMCRAH is loaded into DMCRAL.

(4) Repeat-Block Transfer Mode (DMTMD.MD[1:0] = 11b)

DMCRAH specifies the block size and DMCRAL functions as a 10-bit block size counter.

The block size is one when the setting is 0x001, 1023 when it is 0x3FF, and 1024 when it is 0x000. In repeat-block transfer mode, a value in the range of 0x000 to 0x3FF can be set for DMCRAH and DMCRAL.

Setting bits [15:10] in DMCRAL is invalid. Write 0 to these bits.

The value in DMCRAL is decremented by one each time data is transferred until it reaches 0x000, at which the value in DMCRAH is loaded into DMCRAL.

15.2.7 DMCRB : DMA Block Transfer Count Register

Base address: DMACn = 0x4000_5000 + 0x0040 × n (n = 0 to 7)

Offset address: 0x0C

Bit position:	31	30	29	28	27	26	25	24	23	22	21	20	19	18	17	16
Bit field:	DMCRBH[15:0]															
Value after reset:	0	0	0	0	0	0	0	0	0	0	0	0	0	0	0	0

Bit position:	15	14	13	12	11	10	9	8	7	6	5	4	3	2	1	0
Bit field:	DMCRBL[15:0]															
Value after reset:	0	0	0	0	0	0	0	0	0	0	0	0	0	0	0	0

Bit	Symbol	Function	R/W
15:0	DMCRBL[15:0]	Functions as a number of block, repeat or repeat-block transfer counter. 0x0001 to 0xFFFF (1 to 65535) 0x0000 (65536)	R/W
31:16	DMCRBH[15:0]	Specifies the number of block, repeat or repeat-block transfer operations. 0x0001 to 0xFFFF (1 to 65535) 0x0000 (65536)	R/W

Note: If the security attribution is configured as Secure:
- Secure access and Non-secure read access are allowed
- Non-secure write access is ignored, and TrustZone access error is not generated.

If the security attribution is configured as Non-secure:
- Secure and Non-secure access are allowed.

Set the same value for DMCRBH[15:0] and DMCRBL[15:0] in repeat transfer mode, block transfer mode and repeat-block transfer mode.

DMCRBH[15:0] specifies the number of block, repeat and repeat-block transfer operations, and DMCRBL[15:0] functions as a 16-bit the number of block counter in block, repeat, and repeat-block transfer mode, respectively.

The number of transfer operations is one when the setting is 0x0001, 65535 when it is 0xFFFF, and 65536 when it is 0x0000.

In repeat transfer mode, the value is decremented by one when the final data of one repeat size is transferred.

In block transfer mode and repeat-block transfer mode, the value is decremented by one when the final data of one block size is transferred.

In normal transfer mode, DMCRB is not used. The setting is invalid.

When DMTMD.TKP is 1 and the final data of one repeat size or one block size is transferred, DMCRBL[15:0] reloads the value of DMCRBH[15:0] automatically.

15.2.8 DMTMD : DMA Transfer Mode Register

Base address: DMACn = 0x4000_5000 + 0x0040 × n (n = 0 to 7)

Offset address: 0x10

Bit position:	15	14	13	12	11	10	9	8	7	6	5	4	3	2	1	0
Bit field:	MD[1:0]		DTS[1:0]		—	TKP	SZ[1:0]		—	—	—	—	—	—	DCTG[1:0]	
Value after reset:	0	0	0	0	0	0	0	0	0	0	0	0	0	0	0	0

Bit	Symbol	Function	R/W
1:0	DCTG[1:0]	Transfer Request Source Select 0 0: Software request 0 1: Hardware request*1 1 0: Setting prohibited 1 1: Setting prohibited	R/W
7:2	—	These bits are read as 0. The write value should be 0.	R/W
9:8	SZ[1:0]	Transfer Data Size Select 0 0: 8 bits 0 1: 16 bits 1 0: 32 bits 1 1: Setting prohibited	R/W
10	TKP	Transfer Keeping 0: Transfer is stopped by completion of specified total number of transfer operations 1: Transfer is not stopped by completion of specified total number of transfer operations (free-running)	R/W
11	—	This bit is read as 0. The write value should be 0.	R/W
13:12	DTS[1:0]	Repeat Area Select 0 0: The destination is specified as the repeat area or block area 0 1: The source is specified as the repeat area or block area 1 0: The repeat area or block area is not specified 1 1: Setting prohibited	R/W
15:14	MD[1:0]	Transfer Mode Select 0 0: Normal transfer 0 1: Repeat transfer 1 0: Block transfer 1 1: Repeat-block transfer	R/W

Note: If the security attribution is configured as Secure:
- Secure access and Non-secure read access are allowed
- Non-secure write access is ignored, and TrustZone access error is not generated.

If the security attribution is configured as Non-secure:
- Secure and Non-secure access are allowed.

Note 1. To select the DMAC activation source, use the DELSRn registers of the ICU. For details on DMAC activation sources, see Table 12.4 in section 12, Interrupt Controller Unit (ICU).

DTS[1:0] bits (Repeat Area Select)

DTS[1:0] select either the source or destination as the repeat area in repeat or block transfer mode. In normal or repeat-block transfer mode, setting these bits is invalid.

TKP bit (Transfer Keeping)

TKP selects either stopping transfer or keeping transfer by completion of specified total number of transfer operations in repeat, block or repeat-block transfer mode. In normal transfer mode, setting this bit is invalid.

15.2.9 DMINT : DMA Interrupt Setting Register

Base address: DMACn = 0x4000_5000 + 0x0040 × n (n = 0 to 7)

Offset address: 0x13

Bit position:	7	6	5	4	3	2	1	0
Bit field:	—	—	—	DTIE	ESIE	RPTIE	SARIE	DARIE
Value after reset:	0	0	0	0	0	0	0	0

Bit	Symbol	Function	R/W
0	DARIE	Destination Address Extended Repeat Area Overflow Interrupt Enable 0: Disables an interrupt request for an extended repeat area overflow on the destination address 1: Enables an interrupt request for an extended repeat area overflow on the destination address	R/W
1	SARIE	Source Address Extended Repeat Area Overflow Interrupt Enable 0: Disables an interrupt request for an extended repeat area overflow on the source address 1: Enables an interrupt request for an extended repeat area overflow on the source address	R/W
2	RPTIE	Repeat Size End Interrupt Enable 0: Disables the repeat size end interrupt request 1: Enables the repeat size end interrupt request	R/W
3	ESIE	Transfer Escape End Interrupt Enable 0: Disables the transfer escape end interrupt request 1: Enables the transfer escape end interrupt request	R/W
4	DTIE	Transfer End Interrupt Enable 0: Disables the transfer end interrupt request 1: Enables the transfer end interrupt request	R/W
7:5	—	These bits are read as 0. The write value should be 0.	R/W

Note: If the security attribution is configured as Secure:
- Secure access and Non-secure read access are allowed
- Non-secure write access is ignored, and TrustZone access error is not generated.

If the security attribution is configured as Non-secure:
- Secure and Non-secure access are allowed.

DARIE bit (Destination Address Extended Repeat Area Overflow Interrupt Enable)

When an extended repeat area overflow on the destination address occurs while DARIE bit is set to 1, the DMCNT.DTE bit is cleared to 0. At the same time, the DMSTS.ESIF flag is set to 1 to indicate that an interrupt by an extended repeat area overflow on the destination address is requested.

When block transfer mode is used with the extended repeat area function, an interrupt is requested after completion of a 1-block size transfer. When setting 1 in the DMCNT.DTE bit of the channel for which a transfer has been stopped, the transfer is resumed from the state when the transfer is stopped.

When the extended repeat area is not specified for the destination address, this bit is ignored.

When set to repeat-block transfer mode, do not use this bit.

SARIE bit (Source Address Extended Repeat Area Overflow Interrupt Enable)

When an extended repeat area overflow on the source address occurs while SARIE bit is set to 1, the DMCNT.DTE bit is cleared to 0. At the same time, the DMSTS.ESIF flag is set to 1 to indicate that an interrupt by an extended repeat area overflow on the source address is requested.

When block transfer mode is used with the extended repeat area function, an interrupt is requested after completion of a 1-block size transfer. When setting 1 in the DMCNT.DTE bit of the channel for which a transfer has been stopped, the transfer is resumed from the state when the transfer is stopped.

When the extended repeat area is not specified for the source address, this bit is ignored.

When set to repeat-block transfer mode, do not use this bit.

RPTIE bit (Repeat Size End Interrupt Enable)

When RPTIE bit is set to 1 in repeat transfer mode, the DMCNT.DTE bit is cleared to 0 after completion of a 1-repeat size data transfer. At the same time, the DMSTS.ESIF flag is set to 1 to indicate that the repeat size end interrupt request has been generated. The repeat size end interrupt request can be generated even when the DMTMD.DTS[1:0] bits are 10b (= repeat area or block area is not specified).

When this bit is set to 1 in block transfer mode, the DMCNT.DTE bit is cleared to 0 after completion of a 1-block data transfer in the same way as repeat transfer mode. At the same time, the DMSTS.ESIF flag is set to 1 to indicate that the repeat size end interrupt request has been generated. The repeat size end interrupt request can be generated even when the DMTMD.DTS[1:0] bits are 10b (= repeat area or block area is not specified).

When set to repeat-block transfer mode, do not use this bit.

ESIE bit (Transfer Escape End Interrupt Enable)

ESIE bit enables or disables the transfer escape end interrupt requests (repeat size end interrupt request and extended repeat area overflow interrupt request) that are generated during DMA transfer.

The transfer escape end interrupt is generated when the DMSTS.ESIF flag is set to 1 with this bit set to 1. The transfer escape end interrupt is cleared by clearing this bit or the DMSTS.ESIF flag to 0.

DTIE bit (Transfer End Interrupt Enable)

DTIE bit enables or disables the transfer end interrupt request to be generated on completion of a specified number of data transfers.

The transfer end interrupt is generated when the DMSTS.DTIF flag is set to 1 with this bit set to 1. The transfer end interrupt is cleared by clearing this bit or the DMSTS.DTIF flag to 0.

15.2.10 DMAMD : DMA Address Mode Register

Base address: DMACn = 0x4000_5000 + 0x0040 × n (n = 0 to 7)

Offset address: 0x14

Bit position:	15	14	13	12	11	10	9	8	7	6	5	4	3	2	1	0
Bit field:	SM[1:0]		SADR	SARA[4:0]					DM[1:0]		DADR	DARA[4:0]				
Value after reset:	0	0	0	0	0	0	0	0	0	0	0	0	0	0	0	0

Bit	Symbol	Function	R/W
4:0	DARA[4:0]	Destination Address Extended Repeat Area Specifies the extended repeat area on the destination address. For details on the settings, see Table 15.2.	R/W
5	DADR	Destination Address Update Select After Reload 0: Only reloading 1: Add index after reloading	R/W
7:6	DM[1:0]	Destination Address Update Mode 0 0: Destination address is fixed 0 1: Offset addition 1 0: Destination address is incremented 1 1: Destination address is decremented	R/W
12:8	SARA[4:0]	Source Address Extended Repeat Area Specifies the extended repeat area on the source address. For details on the settings, see Table 15.2.	R/W

Bit	Symbol	Function	R/W
13	SADR	Source Address Update Select After Reload 0: Only reloading 1: Add index after reloading	R/W
15:14	SM[1:0]	Source Address Update Mode 0 0: Source address is fixed 0 1: Offset addition 1 0: Source address is incremented 1 1: Source address is decremented	R/W

Note: If the security attribution is configured as Secure:
- Secure access and Non-secure read access are allowed
- Non-secure write access is ignored, and TrustZone access error is not generated.

If the security attribution is configured as Non-secure:
- Secure and Non-secure access are allowed.

DARA[4:0] bits (Destination Address Extended Repeat Area)

DARA[4:0] bits specify the extended repeat area on the destination address. The extended repeat area function is realized by updating the specified lower address bits with the remaining upper address bits fixed. The size of the extended repeat area can be any power of two between 2 bytes and 128 Mbytes.

When the lower address overflows the extended repeat area by address increment, the start address of the extended repeat area is set. Similarly, when the lower address underflows the extended repeat area by address decrement, the end address of the extended repeat area is set.

When the repeat area or block area is specified as a transfer destination, do not specify the extended repeat area on the destination address. When repeat transfer or block transfer is selected, and when DMTMD.DTS[1:0] = 00b (the transfer destination is specified as the repeat area or block area), write 00000b in the DARA[4:0] bits.

In repeat-block transfer mode, write 00000b in the DARA[4:0] bits.

An interrupt can be requested when an overflow or underflow occurs in the extended repeat area with the DMINT.DARIE bit set to 1. Table 15.2 lists the settings and the corresponding extended repeat areas.

DADR bits (Destination Address Update Select After Reload)

In repeat-block transfer mode, this bit specifies the behavior of DMDAR after reloading DMDRR.

When this bit is set to 1, an index value ((DMDBSH-DMDBSL) × DataSize) is added to DMDAR after reloading DMDRR.

When this bit is set to 0, DMDAR only reloads DMDRR. This behavior is described in Table 15.13.

In normal, repeat or block transfer mode, this bit is ignored.

DM[1:0] bits (Destination Address Update Mode)

DM[1:0] bits select the mode of updating the destination address.

When increment is selected and the DMTMD.SZ[1:0] bits are set to 00b, 01b, or 10b, the destination address is incremented by 1, 2, or 4, respectively.

When decrement is selected and the DMTMD.SZ[1:0] bits are set to 00b, 01b, or 10b, the destination address is decremented by 1, 2, or 4, respectively.

When offset addition is selected, the offset specified by the DMOFR register is added to the address.

SARA[4:0] bits (Source Address Extended Repeat Area)

SARA[4:0] bits specify the extended repeat area on the source address. The extended repeat area function is realized by updating the specified lower address bits with the remaining upper address bits fixed. The size of the extended repeat area can be any power of two between 2 bytes and 128 Mbytes.

When the lower address overflows the extended repeat area by address increment, the start address of the extended repeat area is set. Similarly, when the lower address underflows the extended repeat area by address decrement, the end address of the extended repeat area is set.

When the repeat area or block area is specified as a transfer source, do not specify the extended repeat area on the source address. When repeat transfer or block transfer is selected, and when DMTMD.DTS[1:0] = 01b (the transfer source is specified as the repeat area or block area), write 00000b in the SARA[4:0] bits.

In repeat-block transfer mode, write 00000b in the SARA[4:0] bits.

An interrupt can be requested when an overflow or underflow occurs in the extended repeat area with the DMINT.SARIE bit set to 1. Table 15.2 lists the settings and the corresponding extended repeat areas.

SADR bits (Source Address Update Select After Reload)

In repeat-block transfer mode, this bit specifies the behavior of DMSAR after reloading DMSRR.

When this bit is set to 1, an index value ((DMSBSH-DMSBSL) × DataSize) is added to DMSAR after reloading DMSRR.

When this bit is set to 0, DMSAR only reloads DMSRR. This behavior is described in Table 15.12.

In normal, repeat or block transfer mode, this bit is ignored.

SM[1:0] bits (Source Address Update Mode)

SM[1:0] bits select the mode of updating the source address.

When increment is selected and the DMTMD.SZ[1:0] bits are set to 00b, 01b, or 10b, the source address is incremented by 1, 2, or 4, respectively.

When decrement is selected and the DMTMD.SZ[1:0] bits are set to 00b, 01b, or 10b, the source address is decremented by 1, 2, or 4, respectively.

When offset addition is selected, the offset specified by the DMOFR register is added to the address.

Table 15.2 SARA[4:0] or DARA[4:0] settings and corresponding repeat areas (1 of 2)

SARA[4:0] or DARA[4:0] settings	Extended repeat area
00000b	Not specified
00001b	2 bytes specified as extended repeat area by the lower 1 bit of the address
00010b	4 bytes specified as extended repeat area by the lower 2 bits of the address
00011b	8 bytes specified as extended repeat area by the lower 3 bits of the address
00100b	16 bytes specified as extended repeat area by the lower 4 bits of the address
00101b	32 bytes specified as extended repeat area by the lower 5 bits of the address
00110b	64 bytes specified as extended repeat area by the lower 6 bits of the address
00111b	128 bytes specified as extended repeat area by the lower 7 bits of the address
01000b	256 bytes specified as extended repeat area by the lower 8 bits of the address
01001b	512 bytes specified as extended repeat area by the lower 9 bits of the address
01010b	1 Kbyte specified as extended repeat area by the lower 10 bits of the address
01011b	2 Kbytes specified as extended repeat area by the lower 11 bits of the address
01100b	4 Kbytes specified as extended repeat area by the lower 12 bits of the address
01101b	8 Kbytes specified as extended repeat area by the lower 13 bits of the address
01110b	16 Kbytes specified as extended repeat area by the lower 14 bits of the address
01111b	32 Kbytes specified as extended repeat area by the lower 15 bits of the address
10000b	64 Kbytes specified as extended repeat area by the lower 16 bits of the address
10001b	128 Kbytes specified as extended repeat area by the lower 17 bits of the address
10010b	256 Kbytes specified as extended repeat area by the lower 18 bits of the address
10011b	512 Kbytes specified as extended repeat area by the lower 19 bits of the address
10100b	1 Mbyte specified as extended repeat area by the lower 20 bits of the address
10101b	2 Mbytes specified as extended repeat area by the lower 21 bits of the address
10110b	4 Mbytes specified as extended repeat area by the lower 22 bits of the address
10111b	8 Mbytes specified as extended repeat area by the lower 23 bits of the address
11000b	16 Mbytes specified as extended repeat area by the lower 24 bits of the address
11001b	32 Mbytes specified as extended repeat area by the lower 25 bits of the address

Table 15.2 SARA[4:0] or DARA[4:0] settings and corresponding repeat areas (2 of 2)

SARA[4:0] or DARA[4:0] settings	Extended repeat area
11010b	64 Mbytes specified as extended repeat area by the lower 26 bits of the address
11011b	128 Mbytes specified as extended repeat area by the lower 27 bits of the address
11100b to 11111b	Setting prohibited.

15.2.11 DMOFR : DMA Offset Register

Base address: DMACn = 0x4000_5000 + 0x0040 × n (n = 0 to 7)

Offset address: 0x18

Bit position:	31																															0
Bit field:																																
Value after reset:	0	0	0	0	0	0	0	0	0	0	0	0	0	0	0	0	0	0	0	0	0	0	0	0	0	0	0	0	0	0	0	0

Bit	Symbol	Function	R/W
31:0	n/a	Specifies the offset when offset addition is selected as the address update mode for transfer source or destination. 0x00000000 to 0x00FFFFFF (0 bytes to (16 M – 1) bytes) 0xFF000000 to 0xFFFFFFFF (–16 Mbytes to –1 byte)	R/W

Note: If the security attribution is configured as Secure:
- Secure access and Non-secure read access are allowed
- Non-secure write access is ignored, and TrustZone access error is not generated.

If the security attribution is configured as Non-secure:
- Secure and Non-secure access are allowed.

Write to this register while the DMAC operation is stopped or DMA transfer is disabled (not during data transfer).

Setting bits 31 to 25 is invalid; a value of bit 24 is extended to bits 31 to 25. Reading DMOFR returns the extended value.

In repeat-block transfer mode, the offset is not specified by DMOFR when offset addition is selected, write 0 to DMOFR.

15.2.12 DMCNT : DMA Transfer Enable Register

Base address: DMACn = 0x4000_5000 + 0x0040 × n (n = 0 to 7)

Offset address: 0x1C

Bit position:	7	6	5	4	3	2	1	0
Bit field:	—	—	—	—	—	—	—	DTE
Value after reset:	0	0	0	0	0	0	0	0

Bit	Symbol	Function	R/W
0	DTE	DMA Transfer Enable 0: Disables DMA transfer 1: Enables DMA transfer	R/W
7:1	—	These bits are read as 0. The write value should be 0.	R/W

Note: If the security attribution is configured as Secure:
- Secure access and Non-secure read access are allowed
- Non-secure write access is ignored, and TrustZone access error is not generated.

If the security attribution is configured as Non-secure:
- Secure and Non-secure access are allowed.

DTE bit (DMA Transfer Enable)

When the DMAST.DMST bit is set to 1 (DMAC activation is enabled) and this bit is set to 1 (DMA transfer is enabled), DMA transfer can be started for the corresponding channel.

[Setting condition]

- When 1 is written to this bit.

[Clearing conditions]

- When 0 is written to this bit
- When the specified total volume of data transfer is completed
- When DMA transfer is stopped by the repeat size end interrupt
- When DMA transfer is stopped by the extended repeat area overflow interrupt
- When DMA transfer is stopped by the access error occurs. See section 15.5. Processing on DMA Transfer Error.

15.2.13 DMREQ : DMA Software Start Register

Base address: DMACn = 0x4000_5000 + 0x0040 × n (n = 0 to 7)

Offset address: 0x1D

Bit position:	7	6	5	4	3	2	1	0
Bit field:	—	—	—	CLRS	—	—	—	SWREQ
Value after reset:	0	0	0	0	0	0	0	0

Bit	Symbol	Function	R/W
0	SWREQ	DMA Software Start 0: DMA transfer is not requested 1: DMA transfer is requested	R/W
3:1	—	These bits are read as 0. The write value should be 0.	R/W
4	CLRS	DMA Software Start Bit Auto Clear Select 0: SWREQ bit is cleared after DMA transfer is started by software 1: SWREQ bit is not cleared after DMA transfer is started by software	R/W
7:5	—	These bits are read as 0. The write value should be 0.	R/W

Note: If the security attribution is configured as Secure:
- Secure access and Non-secure read access are allowed
- Non-secure write access is ignored, and TrustZone access error is not generated.

If the security attribution is configured as Non-secure:
- Secure and Non-secure access are allowed.

SWREQ bit (DMA Software Start)

When 1 is written to SWREQ bit, a DMA transfer request is generated. After DMA transfer is started in response to the request, this bit is cleared to 0 if the CLRS bit is set to 0. This bit is not cleared to 0 while the CLRS bit is set to 1. In this case, a DMA transfer request can be issued again after completion of a transfer.

Note: Setting this bit is valid and DMA transfer by software is enabled only when the DMTMD.DCTG[1:0] bits are set to 00b (DMAC activation source is software).

Setting this bit is invalid when the DMTMD.DCTG[1:0] bits are set to a value other than 00b.

To start DMA transfer by software with the CLRS bit being 0, ensure that the SWREQ bit is 0, and then write 1 to the SWREQ bit.

[Setting condition]

- When 1 is written to this bit.

[Clearing conditions]

- When a DMA transfer request by software is accepted and DMA transfer is started while the CLRS bit is set to 0 (the SWREQ bit is cleared after DMA transfer is started by software).
- When 0 is written to this bit.

CLRS bit (DMA Software Start Bit Auto Clear Select)

CLRS bit specifies whether to clear the SWREQ bit to 0 after DMA transfer is started in response to the DMA transfer request generated by setting the SWREQ bit to 1. With this bit set to 0, the SWREQ bit is cleared to 0 after DMA transfer is started. With this bit set to 1, the SWREQ bit is not cleared to 0. In this case, a DMA transfer request can be issued again after completion of a transfer.

15.2.14 DMSTS : DMA Status Register

Base address: DMACn = 0x4000_5000 + 0x0040 × n (n = 0 to 7)

Offset address: 0x1E

Bit position:	7	6	5	4	3	2	1	0
Bit field:	ACT	—	—	DTIF	—	—	—	ESIF
Value after reset:	0	0	0	0	0	0	0	0

Bit	Symbol	Function	R/W
0	ESIF	Transfer Escape End Interrupt Flag 0: A transfer escape end interrupt has not been generated 1: A transfer escape end interrupt has been generated	R/W*1
3:1	—	These bits are read as 0. The write value should be 0.	R/W
4	DTIF	Transfer End Interrupt Flag 0: A transfer end interrupt has not been generated 1: A transfer end interrupt has been generated	R/W*1
6:5	—	These bits are read as 0. The write value should be 0.	R/W
7	ACT	DMAC Active Flag 0: DMAC is in the idle state 1: DMAC is operating	R

Note: If the security attribution is configured as Secure:
- Secure access and Non-secure read access are allowed
- Non-secure write access is ignored, and TrustZone access error is not generated.

If the security attribution is configured as Non-secure:
- Secure and Non-secure access are allowed.

Note 1. Only 0 can be written to clear the flag.

ESIF flag (Transfer Escape End Interrupt Flag)

This flag indicates that the transfer escape end interrupt has been generated.

[Setting conditions]

- When 1-repeat size data transfer is completed in repeat transfer mode with the DMINT.RPTIE bit set to 1.
- When 1-block data transfer is completed in block transfer mode with the DMINT.RPTIE bit set to 1.
- When an extended repeat area overflow on the source address occurs while the DMINT.SARIE bit is set to 1 and the DMAMD.SARA[4:0] bits are set to a value other than 00000b (extended repeat area is specified on the transfer source address).
- When an extended repeat area overflow on the destination address occurs while the DMINT.DARIE bit is set to 1 and the DMAMD.DARA[4:0] bits are set to a value other than 00000b (extended repeat area is specified on the transfer destination address).

[Clearing conditions]

- When 0 is written to this bit.
- When 1 is written to the DMCNT.DTE bit.

DTIF flag (Transfer End Interrupt Flag)

This flag indicates that the transfer end interrupt has been generated.

[Setting conditions]

- When the specified number of unit-transfers are completed in normal transfer mode (the value of DMCRAL becoming 0 on completion of transfer).
- When the specified number of repeat transfer operations are completed in repeat transfer mode (the value of DMCRBL becoming 0 on completion of transfer with DMTMD.TKP = 0 or the value of DMCRBL reloading DMCRBH with DMTMD.TKP = 1).
- When the specified number of blocks have been transferred in block transfer mode and repeat-block transfer mode (the value of DMCRBL becoming 0 on completion of transfer with DMTMD.TKP = 0 or the value of DMCRBL reloading DMCRBH with DMTMD.TKP = 1).

[Clearing conditions]

- When 0 is written to this bit.
- When 1 is written to the DMCNT.DTE bit.

ACT flag (DMAC Active Flag)

This flag indicates whether the DMAC is in the idle or active state.

[Setting condition]

- When the DMAC starts data transfer operation.

[Clearing condition]

- When data transfer in response to one transfer request is completed.

15.2.15 DMSBS : DMA Source Buffer Size Register

Base address: DMACn = 0x4000_5000 + 0x0040 × n (n = 0 to 7)

Offset address: 0x28

Bit position:	31	30	29	28	27	26	25	24	23	22	21	20	19	18	17	16
Bit field:	DMSBSH[15:0]															
Value after reset:	0	0	0	0	0	0	0	0	0	0	0	0	0	0	0	0

Bit position:	15	14	13	12	11	10	9	8	7	6	5	4	3	2	1	0
Bit field:	DMSBSL[15:0]															
Value after reset:	0	0	0	0	0	0	0	0	0	0	0	0	0	0	0	0

Bit	Symbol	Function	R/W
15:0	DMSBSL[15:0]	Functions as data transfer counter in repeat-block transfer mode See Table 15.3 for available settings.	R/W
31:16	DMSBSH[15:0]	Specifies the repeat-area size in repeat-block transfer mode See Table 15.3 for available settings.	R/W

Note: If the security attribution is configured as Secure:
- Secure access and Non-secure read access are allowed
- Non-secure write access is ignored, and TrustZone access error is not generated.

If the security attribution is configured as Non-secure:
- Secure and Non-secure access are allowed.

Set the same value for DMSBSH[15:0] and DMSBSL[15:0] in repeat-block transfer mode. Write 0x00000000 to DMSBS in normal, repeat and block transfer mode.

DMSBSH[15:0] specifies buffer size and DMSBSL[15:0] functions as a 16-bit buffer size counter in repeat-block transfer mode. In repeat-block transfer mode, source repeat area is specified by DMSBSH[15:0].

When address update mode is incremented address or decremented address, this register means the numbers of data of whole buffer. When address update mode is offset addition, this register means the numbers of data of an individual buffer. In offset addition, setting DMSBSH[15:0] and DMSBSL[15:0] to 0x0000 is prohibited. When final data of one buffer size is transferred, DMSBSL[15:0] reloads value of DMSBSH[15:0]. When address update mode is fixed address, this register

is ignored. Table 15.3 shows the setting values of DMA Source Buffer Size Register corresponding to Transfer Data Size in Source Address Update Mode.

Table 15.3 Available setting for DMSBS register in repeat-block transfer mode

Source address update mode (DMAMD.SM)	Transfer data size (DMTMD.SZ)	Available setting for DMSBSH and DMSBSL bits
Source address is fixed (SM = 00b)	Don't care	0x0000 (DMSBS is not used)
Offset addition (SM = 01b)	8 bits (SZ = 00b)	0x0001 to 0xFFFF (1 to 65535)
	16 bits (SZ = 01b)	0x0001 to 0x7FFF (1 to 32767)
	32 bits (SZ = 10b)	0x0001 to 0x3FFF (1 to 16383)
Source address is incremented or decremented (SM = 1xb)	Don't care	0x0000 (infinite) 0x0001 to 0xFFFF (1 to 65535)

In normal, repeat and block transfer mode, DMSBS is not used. The setting is invalid.

15.2.16 DMDBS : DMA Destination Buffer Size Register

Base address: DMACn = 0x4000_5000 + 0x0040 × n (n = 0 to 7)

Offset address: 0x2C

Bit position:	31	30	29	28	27	26	25	24	23	22	21	20	19	18	17	16
Bit field:	DMDBSH[15:0]															
Value after reset:	0	0	0	0	0	0	0	0	0	0	0	0	0	0	0	0

Bit position:	15	14	13	12	11	10	9	8	7	6	5	4	3	2	1	0
Bit field:	DMDBSL[15:0]															
Value after reset:	0	0	0	0	0	0	0	0	0	0	0	0	0	0	0	0

Bit	Symbol	Function	R/W
15:0	DMDBSL[15:0]	Functions as data transfer counter in repeat-block transfer mode. See Table 15.4 for available settings.	R/W
31:16	DMDBSH[15:0]	Specifies the repeat-area size in repeat-block transfer mode. See Table 15.4 for available settings.	R/W

Note: If the security attribution is configured as Secure:
- Secure access and Non-secure read access are allowed
- Non-secure write access is ignored, and TrustZone access error is not generated.

If the security attribution is configured as Non-secure:
- Secure and Non-secure access are allowed.

Set the same value for DMDBSH[15:0] and DMDBSL[15:0] in repeat-block transfer mode. Write 0x00000000 to DMDBS in normal, repeat and block transfer mode.

DMDBSH[15:0] specifies buffer size and DMDBSL[15:0] functions as a 16-bit buffer size counter in repeat-block transfer mode. In repeat-block transfer mode, destination repeat area is specified by DMDBSH[15:0].

When address update mode is incremented address or decremented address, this register means the numbers of data of whole buffer. When address update mode is offset addition, this register means the numbers of data of an individual buffer. In offset addition, setting DMDBSH[15:0] and DMDBSL[15:0] to 0x0000 is prohibited. When final data of one buffer size is transferred, DMDBSL[15:0] reloads value of DMDBSH[15:0]. When address update mode is fixed address, this register is ignored. Table 15.4 shows the setting values of Destination Buffer Size Register corresponding to Transfer Data Size in Destination Address Update Mode.

Table 15.4 Available setting for DMDBS register in repeat-block transfer mode (1 of 2)

Destination address update mode (DMAMD.DM)	Transfer data size (DMTMD.SZ)	Available setting for DMDBSH and DMDBSL bits
Destination address is fixed (DM = 00b)	Don't care	0x0000 (DMDBS is not used)

Table 15.4 Available setting for DMDBS register in repeat-block transfer mode (2 of 2)

Destination address update mode (DMAMD.DM)	Transfer data size (DMTMD.SZ)	Available setting for DMDBSH and DMDBSL bits
Offset addition (DM = 01b)	8 bits (SZ = 00b)	0x0001 to 0xFFFF (1 to 65535)
	16 bits (SZ = 01b)	0x0001 to 0x7FFF (1 to 32767)
	32 bits (SZ = 10b)	0x0001 to 0x3FFF (1 to 16383)
Destination address is incremented or decremented (DM = 1xb)	Don't care	0x0000 (infinite) 0x0001 to 0xFFFF (1 to 65535)

In normal, repeat and block transfer mode, DMDBS is not used. The setting is invalid.

15.2.17 DMAST : DMA Module Activation Register

Base address: DMA = 0x4000_5200

Offset address: 0x00

Bit position:	7	6	5	4	3	2	1	0
Bit field:	—	—	—	—	—	—	—	DMST
Value after reset:	0	0	0	0	0	0	0	0

Bit	Symbol	Function	R/W
0	DMST	DMAC Operation Enable 0: DMAC activation is disabled 1: DMAC activation is enabled	R/W
7:1	—	These bits are read as 0. The write value should be 0.	R/W

Note: If the security attribution is configured as Secure:
- Secure access and Non-secure read access are allowed
- Non-secure write access is ignored, and TrustZone access error is not generated.

If the security attribution is configured as Non-secure:
- Secure and Non-secure access are allowed.

DMST bit (DMAC Operation Enable)

Setting the DMAST.DMST to 1 enables DMAC activation for all channels. When the DMST bit is set to 1 (DMAC activation is enabled), and 1 is written to the DMCNT.DTE bit (DMA transfer is enabled) for multiple channels, all associated channels can be placed in the transfer request ready state at the same time.

When the DMST bit clears to 0 during DMA transfer, DMA transfer is suspended after the current data transfer associated with a single transfer request completes. To resume DMA transfer, set the DMST bit to 1 again.

[Setting condition]

- When 1 is written to this bit.

[Clearing condition]

- When 0 is written to this bit.

15.2.18 DMECHR : DMAC Error Channel Register

Base address: DMA = 0x4000_5200

Offset address: 0x40

Bit position:	31	30	29	28	27	26	25	24	23	22	21	20	19	18	17	16
Bit field:	—	—	—	—	—	—	—	—	—	—	—	—	—	—	—	DMESTA
Value after reset:	0	0	0	0	0	0	0	0	0	0	0	0	0	0	0	0

Bit position:	15	14	13	12	11	10	9	8	7	6	5	4	3	2	1	0
Bit field:	—	—	—	—	—	—	—	DMECHSAM	—	—	—	—	—	DMECH		
Value after reset:	0	0	0	0	0	0	0	0	0	0	0	0	0	0	0	0

Bit	Symbol	Function	R/W
2:0	DMECH	DMAC Error channel Indicates the channel number causing the error 0 0 0: Error occurred on Channel 0 0 0 1: Error occurred on Channel 1 0 1 0: Error occurred on Channel 2 ⋮ ⋮ 1 1 1: Error occurred on Channel 7	R
7:3	—	These bits are read as 0. The write value should be 0.	R
8	DMECHSAM	DMAC Error channel Security Attribution Monitor Indicates the security attribution of a channel causing the error 0: Secure channel 1: Non-secure channel	R
15:9	—	These bits are read as 0. The write value should be 0.	R
16	DMESTA	DMAC Error Status 0: No DMA transfer error occurred 1: DMA transfer error occurred	R/W*1
31:17	—	These bits are read as 0. The write value should be 0.	R

Note 1. Writing to DMESTA depends on the value of DMECHSAM

DMECH[2:0] bits (DMAC Error channel)

When a transfer error due to DMA transfer occurs, the DMECH[2:0] bits store the violating DMAC channel.

When reset is selected in MPU.MMPUOAD.OAD and TZF.TZFOAD.OAD, this register is also reset. Select NMI when you want to debug the program.

[Set condition]

- When the DMAC transfer error occurs and DMESTA = 0.

[Clearing condition]

- When 1 is written to DMESTA.

DMECHSAM bit (DMAC Error channel Security Attribution Monitor)

When a transfer error due to DMA transfer occurs, the DMECHSAM bit indicates the security attribution of the violating DMAC channel.

When reset is selected in MPU.MMPUOAD.OAD and TZF.TZFOAD.OAD, this register is also reset. Select NMI when you want to debug the program.

[Set condition]

- When the DMAC transfer error occurs and DMESTA = 0.

[Clearing condition]

- When 1 is written to DMESTA.

DMESTA bit (DMAC Error Status)

The DMESTA bit indicates whether or not a DMA transfer error occurred.

DMECH, DMECHSAM, DMESTA are cleared by writing 1 to DMESTA. Writing 0 to DMESTA is ignored.

When reset is selected in MPU.MMPUOAD.OAD and TZF.TZFOAD.OAD, this register is also reset. Select NMI when you want to debug the program.

[Set condition]

- When the DMAC transfer error occurs.

[Clearing condition]

- When 1 is written to DMESTA.

Note: When DMECHSAM = 1, it can be cleared in the Secure state and Non-secure state. DMECHSAM = 0, it cannot be cleared in the Non-secure state.

15.3 Operation

15.3.1 Transfer Mode

15.3.1.1 Normal Transfer Mode

In normal transfer mode, one data is transferred by one transfer request. A maximum of 65535 can be set as the number of transfer operations using the DMCRAL register. When these bits are set to 0x0000, no specific number of transfer operations is set; data transfer is performed with the transfer counter stopped (free-running function). Setting DMCRB register is invalid in normal transfer mode. Except in free-running function, a transfer end interrupt request can be generated after completion of the specified number of transfer operations.

Table 15.5 summarizes the register update operation in normal transfer mode, and Figure 15.2 shows the operation in normal transfer mode.

Table 15.5 Register update operation in normal transfer mode

Register	Function	Update operation after completion of a transfer by one transfer request
DMSAR	Transfer source address	Increment/decrement/fixed/offset addition
DMDAR	Transfer destination address	Increment/decrement/fixed/offset addition
DMCRAL	Transfer count	Decremented by one/not updated (in free running function)
DMCRAH	—	Not updated (Not used in normal transfer mode)
DMCRB	—	Not updated (Not used in normal transfer mode)

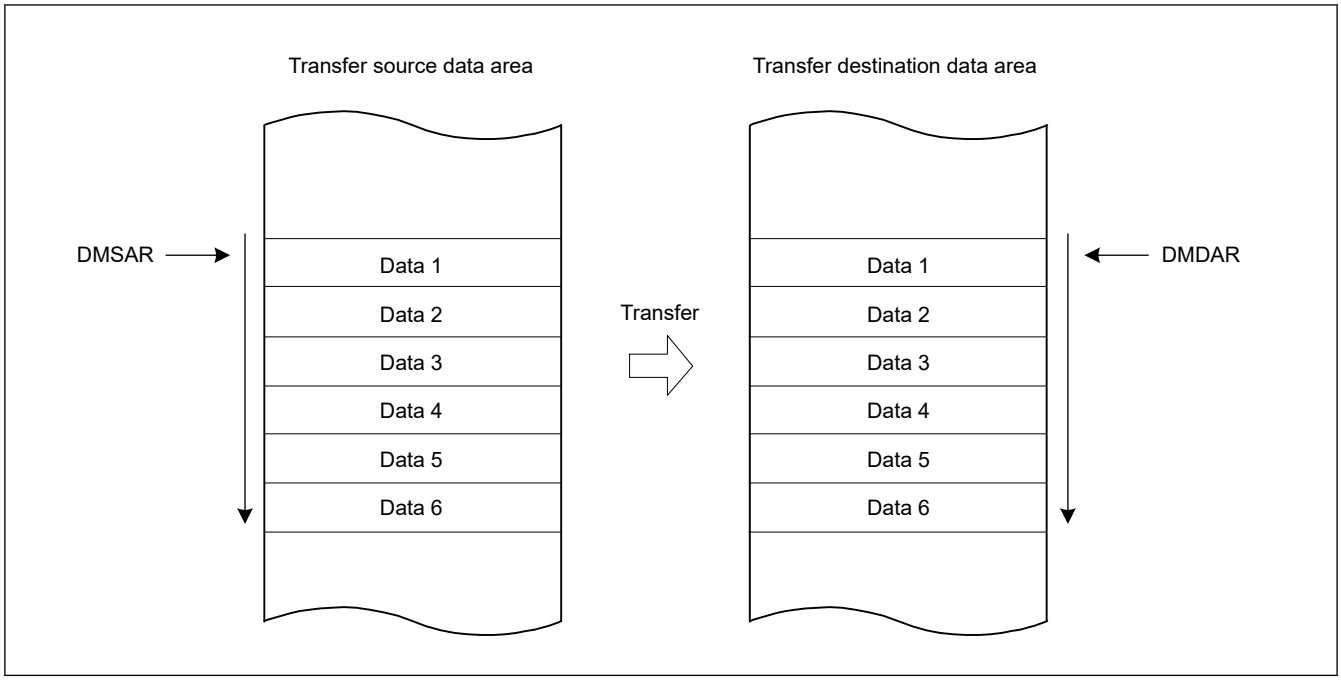

Figure 15.2 Operation in normal transfer mode

15.3.1.2 Repeat Transfer Mode

In repeat transfer mode, one data is transferred by one transfer request.

A maximum of 1K data can be set as a total repeat transfer size using DMCRA register.

A maximum of 64K can be set as the number of repeat transfer operations using DMCRB register. Therefore, a maximum of 64M data (1K data × 64K counts of repeat transfer operations) can be set as a total data transfer size.

Either the transfer source or transfer destination can be specified as a repeat area. When transfer of the repeat size data is completed, the address of the specified repeat area (DMSAR or DMDAR) returns to the transfer start address. When data of the specified repeat size has all been transferred in repeat transfer mode, DMA transfer can be stopped, and the repeat size end interrupt can be requested. DMA transfer can be resumed by writing 1 to the DMCNT.DTE bit in the repeat size end interrupt handling.

A transfer end interrupt request can be generated after completion of the specified number of repeat transfer operations.

Table 15.6 summarizes the register update operation in repeat transfer mode, and Figure 15.3 shows the operation in repeat transfer mode.

Table 15.6 Register update operation in repeat transfer mode (1 of 2)

Register	Function	Update operation after completion of a transfer by one transfer request	
		When DMCRAL register is not 1	When DMCRAL register is 1 (Transfer of the last data in repeat size)
DMSAR	Transfer source address	Increment/decrement/fixed/offset addition	• DMTMD.DTS[1:0] = 00b Increment/decrement/fixed/offset addition • DMTMD.DTS[1:0] = 01b Initial value of DMSAR • DMTMD.DTS[1:0] = 10b Increment/decrement/fixed/offset addition
DMDAR	Transfer destination address	Increment/decrement/fixed/offset addition	• DMTMD.DTS[1:0] = 00b Initial value of DMDAR • DMTMD.DTS[1:0] = 01b Increment/decrement/fixed/offset addition • DMTMD.DTS[1:0] = 10b Increment/decrement/fixed/offset addition
DMCRAH	Repeat size	Not updated	Not updated
DMCRAL	Transfer count	Decremented by one	DMCRAH

Table 15.6 Register update operation in repeat transfer mode (2 of 2)

Register	Function	Update operation after completion of a transfer by one transfer request	
		When DMCRAL register is not 1	When DMCRAL register is 1 (Transfer of the last data in repeat size)
DMCRBH	Number of repeat transfer operations	Not updated	Not updated
DMCRBL	Count of repeat transfer operations	Not updated	Decremented by one

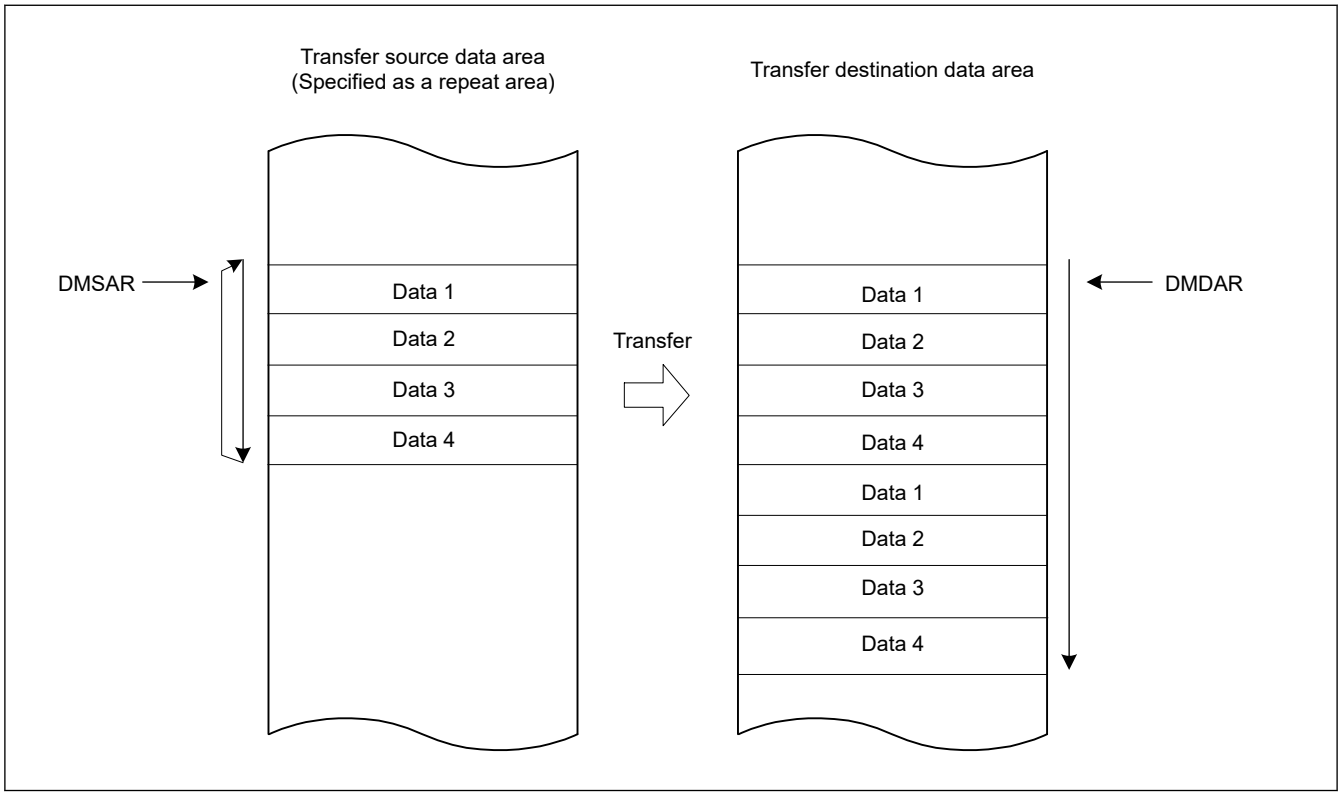

Figure 15.3 Operation in repeat transfer mode

15.3.1.3 Block Transfer Mode

In block transfer mode, a single block data is transferred by one transfer request.

A maximum of 1K data can be set as a total block transfer size using DMCRA register.

A maximum of 64K can be set as the number of block transfer operations using DMCRB register; therefore, a maximum of 64M data (1K data × 64K counts of block transfer operations) can be set as a total data transfer size.

Either the transfer source or transfer destination can be specified as a block area. When transfer of a single block data is completed, the address of the specified block area (DMSAR or DMDAR) returns to the transfer start address. When a single block data has all been transferred in block transfer mode, DMA transfer can be stopped, and the repeat size end interrupt can be requested. DMA transfer can be resumed by writing 1 to the DMCNT.DTE bit in the repeat size end interrupt handling.

Transfer end interrupt request can be generated after completion of the specified number of block transfer operations.

Table 15.7 summarizes the register update operation in block transfer mode, and Figure 15.4 shows the operation in block transfer mode.

Table 15.7 Register update operation in block transfer mode

Register	Function	Update operation after completion of single-block transfer by one transfer request
DMSAR	Transfer source address	• DMTMD.DTS[1:0] = 00b Increment/decrement/fixed/offset addition • DMTMD.DTS[1:0] = 01b Initial value of DMSAR • DMTMD.DTS[1:0] = 10b Increment/decrement/fixed/offset addition
DMDAR	Transfer destination address	• DMTMD.DTS[1:0] = 00b Initial value of DMDAR • DMTMD.DTS[1:0] = 01b Increment/decrement/fixed/offset addition • DMTMD.DTS[1:0] = 10b Increment/decrement/fixed/offset addition
DMCRAH	Block size	Not updated
DMCRAL	Transfer count	DMCRAH
DMCRBH	Number of block transfer operations	Not updated
DMCRBL	Count of block transfer operations	Decremented by one

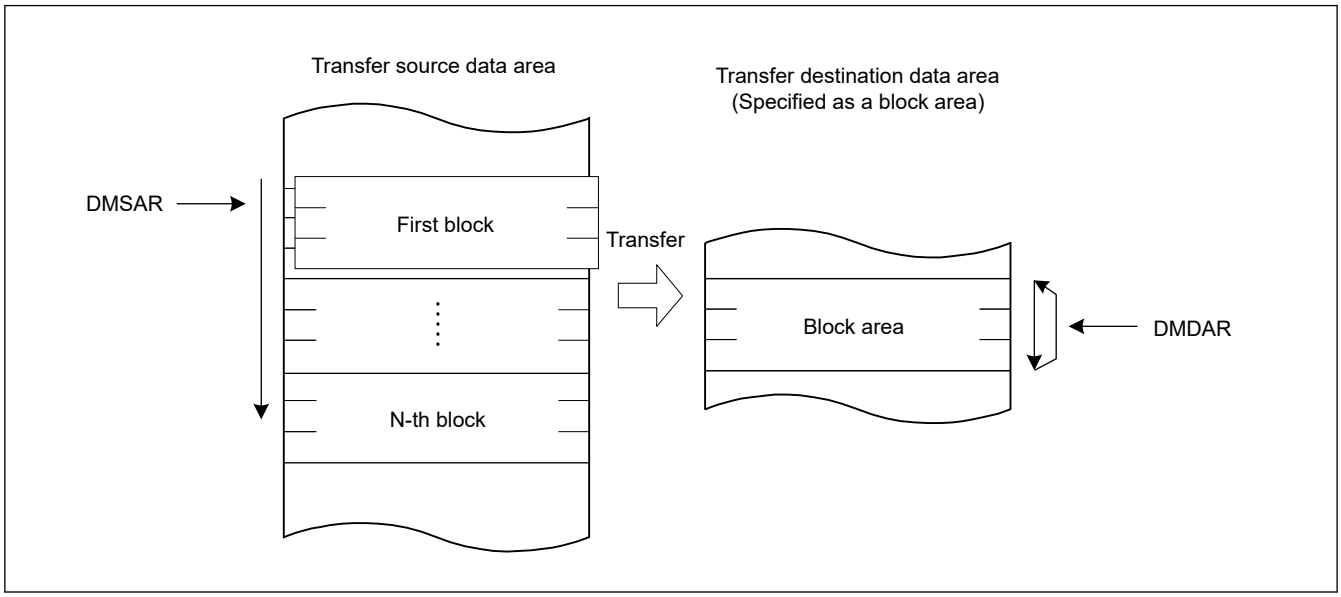

Figure 15.4 Operation in block transfer mode

15.3.1.4 Repeat-Block Transfer Mode

Repeat-block transfer is the operation mode with the following functions added to the block transfer function.

Repeat function: Added function (ring buffer) to repeat specified address area.

Offset function: Multiple areas with offset can be specified within one block transfer.

The repeat function and the offset function can be used for both the transfer source and the transfer destination of repeat-block transfer.

Figure 15.5 shows an example of adding a repeat function to the transfer destination.

Figure 15.6 shows repeat-block transfer with an offset to the transfer destination.

In repeat-block transfer mode, a single block data is transferred by one transfer request.

A maximum of 1K data can be set as a total block transfer size using DMCRA of the DMACn.

A maximum of 64K can be set as the number of block transfer operations using DMCRB of the DMACn; therefore, a maximum of 64M data (1K data × 64K counts of block transfer operations) can be set as a total data transfer size.

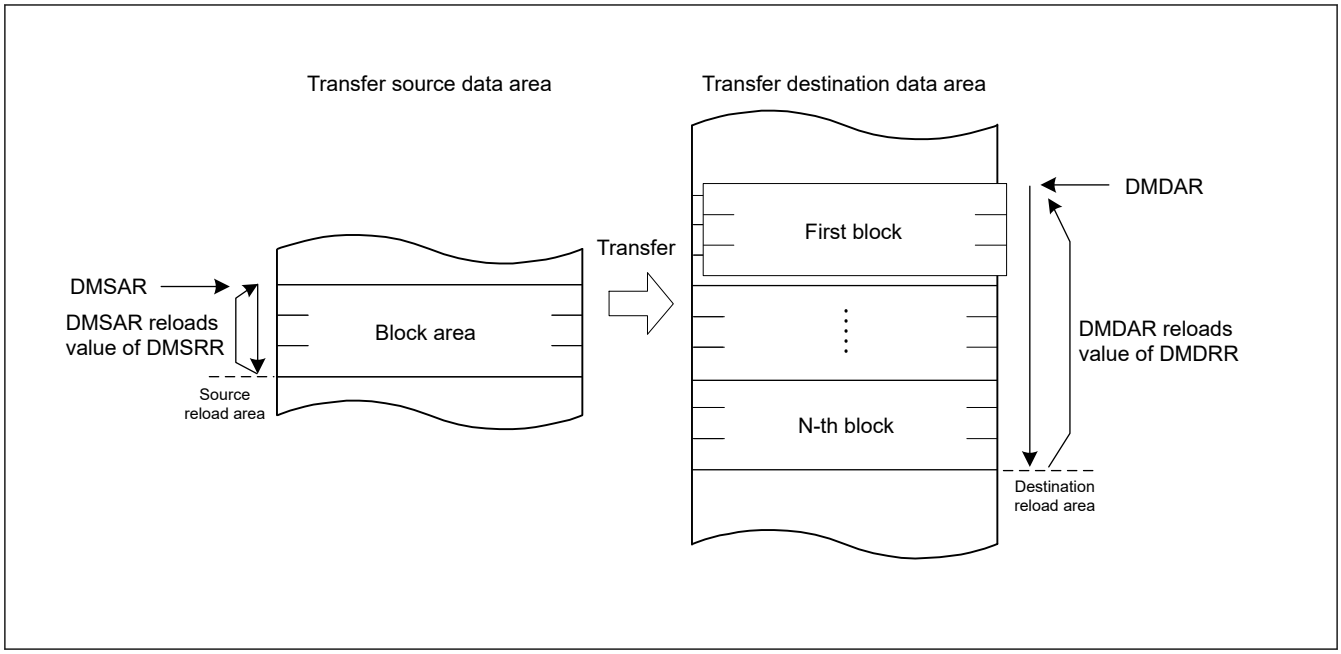

Figure 15.5 Operation in repeat block transfer mode

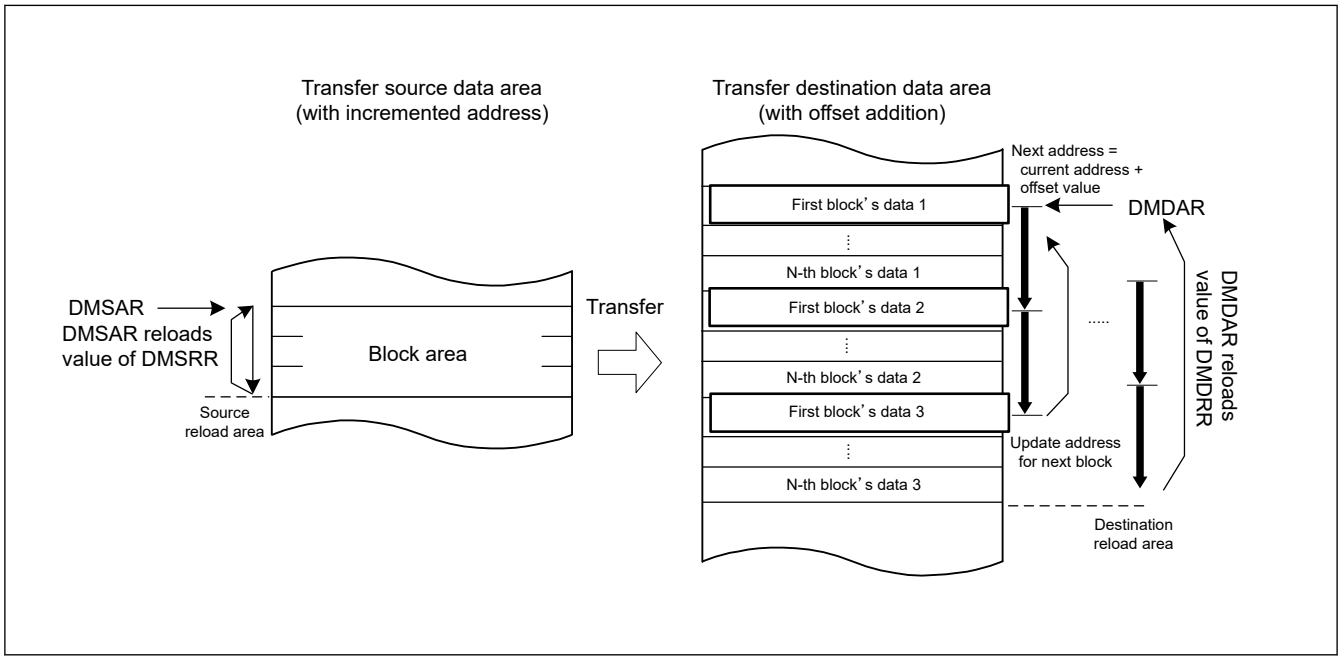

Figure 15.6 Operation in repeat-block transfer mode with offset addition

Table 15.8 to Table 15.13 summarize the register update operations in repeat-block transfer mode.

Table 15.8 Register update operation associated with source area in repeat-block transfer mode (fixed address DMAMD.SM[1:0] = 00b) (1 of 2)

Register	Function	Update operation after single data is transferred		
		DMCRAL[15:0] is not 1	DMCRAL[15:0] is 1 (single block is transferred)	
			DMCRBL[15:0] is not 1	DMCRBL[15:0] is 1
DMSRR	Transfer source reload address	Not updated	Not updated	Not updated
DMSAR	Transfer source address	Not updated	Not updated	Not updated
DMCRAH[9:0]	Block size	Not updated	Not updated	Not updated

Table 15.8 Register update operation associated with source area in repeat-block transfer mode (fixed address DMAMD.SM[1:0] = 00b) (2 of 2)

Register	Function	Update operation after single data is transferred		
		DMCRAL[15:0] is not 1	DMCRAL[15:0] is 1 (single block is transferred)	
			DMCRBL[15:0] is not 1	DMCRBL[15:0] is 1
DMCRAL[15:0]	Block size count	Decremented by 1	DMCRAH[9:0]	DMCRAH[9:0]
DMCRBH[15:0]	Number of block transfer operations	Not updated	Not updated	Not updated
DMCRBL[15:0]	Count of block transfer operations when DMTMD.TKP = 0	Not updated	Decremented by 1	0
	Count of block transfer operations when DMTMD.TKP = 1			DMCRBH[15:0]

Table 15.9 Register update operation associated with destination area in repeat-block transfer mode (fixed address DMAMD.DM[1:0] = 00b)

Register	Function	Update operation after single data is transferred		
		DMCRAL[15:0] is not 1	DMCRAL[15:0] is 1 (single block is transferred)	
			DMCRBL[15:0] is not 1	DMCRBL[15:0] is 1
DMDRR	Transfer destination reload address	Not updated	Not updated	Not updated
DMDAR	Transfer destination address	Not updated	Not updated	Not updated
DMCRAH[9:0]	Block size	Not updated	Not updated	Not updated
DMCRAL[15:0]	Block size count	Decremented by 1	DMCRAH[9:0]	DMCRAH[9:0]
DMCRBH[15:0]	Number of block transfer operations	Not updated	Not updated	Not updated
DMCRBL[15:0]	Count of block transfer operations when DMTMD.TKP = 0	Not updated	Decremented by 1	0
	Count of block transfer operations when DMTMD.TKP = 1			DMCRBH[15:0]

Table 15.10 Register update operation associated with source area in repeat-block transfer mode (incremented or decremented address DMAMD.SM[1:0] = 10b or 11b) (1 of 2)

Register	Function	Update operation after single data is transferred					
		DMSBSL[15:0] is not 1			DMSBSL[15:0] is 1		
		DMCRAL[15:0] is not 1	DMCRAL[15:0] is 1 (single block is transferred)		DMCRAL[15:0] is not 1	DMCRAL[15:0] is 1 (single block is transferred)	
			DMCRBL[15:0] is not 1	DMCRBL[15:0] is 1		DMCRBL[15:0] is not 1	DMCRBL[15:0] is 1
DMSRR	Transfer source reload address	Not updated	Not updated	Not updated	Not updated	Not updated	Not updated

Table 15.10 Register update operation associated with source area in repeat-block transfer mode (incremented or decremented address DMAMD.SM[1:0] = 10b or 11b) (2 of 2)

Register	Function	Update operation after single data is transferred					
		DMSBSL[15:0] is not 1			DMSBSL[15:0] is 1		
		DMCRAL[15:0] is not 1	DMCRAL[15:0] is 1 (single block is transferred)		DMCRAL[15:0] is not 1	DMCRAL[15:0] is 1 (single block is transferred)	
			DMCRBL[15:0] is not 1	DMCRBL[15:0] is 1		DMCRBL[15:0] is not 1	DMCRBL[15:0] is 1
DMSAR	Transfer source address when DMTMD.SM[1:0] = 10b	Incremented by Data Size			DMSRR		
	Transfer source address when DMTMD.SM[1:0] = 11b	Decremented by Data Size			DMSRR		
DMCRAH[9:0]	Block size	Not updated	Not updated	Not updated	Not updated	Not updated	Not updated
DMCRAL[15:0]	Block size count	Decremented by 1	DMCRAH[9:0]	DMCRAH[9:0]	Decremented by 1	DMCRAH[9:0]	DMCRAH[9:0]
DMSBSH[15:0]	Source buffer size (Repeat-size)	Not updated	Not updated	Not updated	Not updated	Not updated	Not updated
DMSBSL[15:0]	Count of transfer data in source buffer	Decremented by 1	Decremented by 1	Decremented by 1	DMSBSH	DMSBSH	DMSBSH
DMCRBH[15:0]	Number of block transfer operations	Not updated	Not updated	Not updated	Not updated	Not updated	Not updated
DMCRBL[15:0]	Count of block transfer operations when DMTMD.TKP = 0	Not updated	Decremented by 1	0	Not updated	Decremented by 1	0
	Count of block transfer operations when DMTMD.TKP = 1			DMCRBH[15:0]			DMCRBH[15:0]

Table 15.11 Register update operation associated with destination area in repeat-block transfer mode (incremented or decremented address DMAMD.DM[1:0] = 10b or 11b) (1 of 2)

Register	Function	Update operation after single data is transferred					
		DMDBSL[15:0] is not 1			DMDBSL[15:0] is 1		
		DMCRAL[15:0] is not 1	DMCRAL[15:0] is 1 (single block is transferred)		DMCRAL[15:0] is not 1	DMCRAL[15:0] is 1 (single block is transferred)	
			DMCRBL[15:0] is not 1	DMCRBL[15:0] is 1		DMCRBL[15:0] is not 1	DMCRBL[15:0] is 1
DMDRR	Transfer destination reload address	Not updated	Not updated	Not updated	Not updated	Not updated	Not updated

Table 15.11 Register update operation associated with destination area in repeat-block transfer mode (incremented or decremented address DMAMD.DM[1:0] = 10b or 11b) (2 of 2)

Register	Function	Update operation after single data is transferred					
		DMDBSL[15:0] is not 1			DMDBSL[15:0] is 1		
		DMCRAL[15:0] is not 1	DMCRAL[15:0] is 1 (single block is transferred)		DMCRAL[15:0] is not 1	DMCRAL[15:0] is 1 (single block is transferred)	
			DMCRBL[15:0] is not 1	DMCRBL[15:0] is 1		DMCRBL[15:0] is not 1	DMCRBL[15:0] is 1
DMDAR	Transfer destination address when DMTMD.DM[1:0] = 10b	Incremented by Data Size			DMDRR		
	Transfer destination address when DMTMD.DM[1:0] = 11b	Decremented by Data Size			DMDRR		
DMCRAH[9:0]	Block size	Not updated	Not updated	Not updated	Not updated	Not updated	Not updated
DMCRAL[15:0]	Block size count	Decremented by 1	DMCRAH[9:0]	DMCRAH[9:0]	Decremented by 1	DMCRAH[9:0]	DMCRAH[9:0]
DMDBSH[15:0]	Destina-tion buffer size (Repeat-size)	Not updated	Not updated	Not updated	Not updated	Not updated	Not updated
DMDBSL[15:0]	Count of transfer data in destination buffer	Decremented by 1	Decremented by 1	Decremented by 1	DMDBSH	DMDBSH	DMDBSH
DMCRBH[15:0]	Number of block transfer operations	Not updated	Not updated	Not updated	Not updated	Not updated	Not updated
DMCRBL[15:0]	Count of block transfer operations when DMTMD.TKP = 0	Not updated	Decremented by 1	0	Not updated	Decremented by 1	0
	Count of block transfer operations when DMTMD.TKP = 1			DMCRBH[15:0]			DMCRBH[15:0]

Table 15.12 Register update operation associated with source area in repeat-block transfer mode (offset addition DMAMD.SM[1:0] = 01b) (1 of 2)

Register	Function	DMCRAL[15:0] is not 1	DMCRAL[15:0] is 1 (single block is transferred)			
			DMSBSL[15:0] is not 1		DMSBSL[15:0] is 1	
			DMCRBL[15:0] is not 1	DMCRBL[15:0] is 1	DMCRBL[15:0] is not 1	DMCRBL[15:0] is 1
DMSRR	Transfer source reload address	Not updated	Not updated	Not updated	Not updated	Not updated

Table 15.12 Register update operation associated with source area in repeat-block transfer mode (offset addition DMAMD.SM[1:0] = 01b) (2 of 2)

Register	Function	DMCRAL[15:0] is not 1	DMCRAL[15:0] is 1 (single block is transferred)			
			DMSBSL[15:0] is not 1		DMSBSL[15:0] is 1	
			DMCRBL[15:0] is not 1	DMCRBL[15:0] is 1	DMCRBL[15:0] is not 1	DMCRBL[15:0] is 1
DMSAR	Transfer source address when DMAMD.SADR = 0	Offset addition by DMSBSH	DMSRR		DMSRR	
	Transfer source address when DMAMD.SADR = 1		DMSRR + (DMS-BSH - DMSBSL) × DataSize			
DMCRAH[9:0]	Block size	Not updated	Not updated	Not updated	Not updated	Not updated
DMCRAL[15:0]	Block size count	Decremented by 1	DMCRAH[9:0]	DMCRAH[9:0]	DMCRAH[9:0]	DMCRAH[9:0]
DMSBSH[15:0]	Source buffer size (Repeat-size)	Not updated	Not updated	Not updated	Not updated	Not updated
DMSBSL[15:0]	Count of transfer data in source buffer	Not updated	Decremented by 1	Decremented by 1	DMSBSH	DMSBSH
DMCRBH[15:0]	Number of block transfer operations	Not updated	Not updated	Not updated	Not updated	Not updated
DMCRBL[15:0]	Count of block transfer operations when DMTMD.TKP = 0	Not updated	Decremented by 1	0	Decremented by 1	0
	Count of block transfer operations when DMTMD.TKP = 1			DMCRBH[15:0]		DMCRBH[15:0]

Table 15.13 Register update operation associated with destination area in repeat-block transfer mode (offset addition DMAMD.DM[1:0] = 01b) (1 of 2)

Register	Function	DMCRAL[15:0] is not 1	DMCRAL[15:0] is 1 (single block is transferred)			
			DMDBSL[15:0] is not 1		DMDBSL[15:0] is 1	
			DMCRBL[15:0] is not 1	DMCRBL[15:0] is 1	DMCRBL[15:0] is not 1	DMCRBL[15:0] is 1
DMDRR	Transfer destination reload address	Not updated	Not updated	Not updated	Not updated	Not updated
DMSAR	Transfer destination address when DMAMD.DADR = 0	Offset addition by DMDBSH	DMDRR		DMDRR	
	Transfer destination address when DMAMD.DADR = 1		DMDRR + (DMDBSH - DMDBSL) × DataSize			
DMCRAH[9:0]	Block size	Not updated	Not updated	Not updated	Not updated	Not updated
DMCRAL[15:0]	Block size count	Decremented by 1	DMCRAH[9:0]	DMCRAH[9:0]	DMCRAH[9:0]	DMCRAH[9:0]

Table 15.13 Register update operation associated with destination area in repeat-block transfer mode (offset addition DMAMD.DM[1:0] = 01b) (2 of 2)

Register	Function	DMCRAL[15:0] is not 1	DMCRAL[15:0] is 1 (single block is transferred)			
			DMDBSL[15:0] is not 1		DMDBSL[15:0] is 1	
			DMCRBL[15:0] is not 1	DMCRBL[15:0] is 1	DMCRBL[15:0] is not 1	DMCRBL[15:0] is 1
DMDBSH[15:0]	Destina-tion buffer size (Repeat-size)	Not updated	Not updated	Not updated	Not updated	Not updated
DMDBSL[15:0]	Count of transfer data in destination buffer	Not updated	Decremented by 1	Decremented by 1	DMDBSH	DMDBSH
DMCRBH[15:0]	Number of block transfer operations	Not updated	Not updated	Not updated	Not updated	Not updated
DMCRBL[15:0]	Count of block transfer operations when DMTMD.TKP = 0	Not updated	Decremented by 1	0	Decremented by 1	0
	Count of block transfer operations when DMTMD.TKP = 1			DMCRBH[15:0]		DMCRBH[15:0]

15.3.2 Extended Repeat Area Function

The DMAC supports a function to specify the extended repeat areas on the transfer source and destination addresses. With the extended repeat areas set, the address registers repeatedly indicate the addresses of the specified extended repeat areas.

The extended repeat areas can be specified separately to the transfer source address register (DMSAR) and transfer destination address register (DMDAR).

The extended repeat area on the source address is specified by the DMAMD.SARA[4:0] bits. The extended repeat area on the destination address is specified by the DMAMD.DARA[4:0] bits. The size can be specified separately for the source and destination sides.

However, the area (of transfer source or transfer destination) which is specified as the repeat area or block area should not be specified as the extended repeat area.

When the address register value reaches the end address of the extended repeat area and the extended repeat area overflows, DMA transfer is stopped and an interrupt by an extended repeat area overflow can be requested. When an overflow occurs in the extended repeat area on the transfer source while the DMINT.SARIE bit is set to 1, the DMSTS.ESIF flag is set to 1 and the DMCNT.DTE bit is cleared to 0 to stop DMA transfer. At this time, if the DMINT.ESIE bit is set to 1, an interrupt by an extended repeat area overflow is requested. When the DMINT.DARIE bit is set to 1, the destination address register becomes a target to apply the function. DMA transfer can be resumed by writing 1 to the DMCNT.DTE bit in the interrupt handling.

Figure 15.7 shows an example of the extended repeat area operation.

Eight bytes are specified as an extended repeat area by the lower three bits of DMSAR (DMAMD.SARA[4:0] bits = 00011b). The data size is eight bits (DMTMD.SZ[1:0] = 00b).

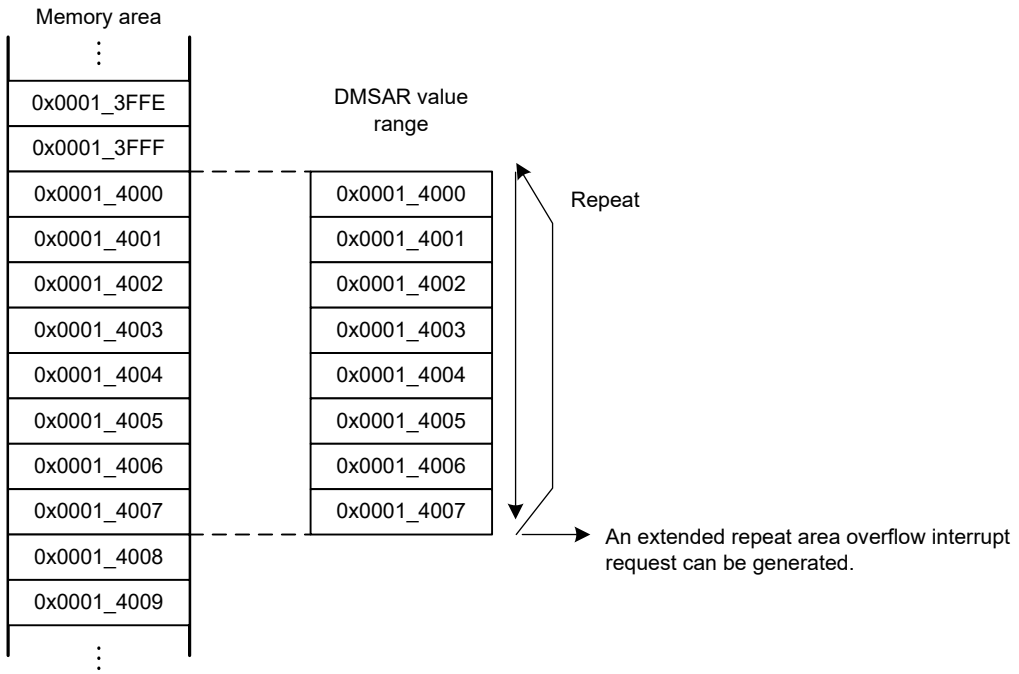

Figure 15.7 Example of extended repeat area operation

When an interrupt by an extended repeat area overflow is used in block transfer mode, the following should be taken into consideration.

When a transfer is stopped by an interrupt by an extended repeat area overflow, the address register must be set so that the block size is a power of 2 or the block size boundary is aligned with the extended repeat area boundary. When an overflow on the extended repeat area occurs during a transfer of one block, the interrupt by the overflow is suspended until transfer of the block is completed, and the transfer overruns.

Figure 15.8 shows an example when the extended repeat area function is used in block transfer mode.

Eight bytes are specified as an extended repeat area by the lower three bits of DMSAR (DMAMD.SARA[4:0] bits = 00011b), block transfer mode with block size 5 is set (DMCRA = 0x0005_0005), and transfer source address is not specified as a block area. Data size is eight bits (DMTMD.SZ[1:0] bits = 00b).

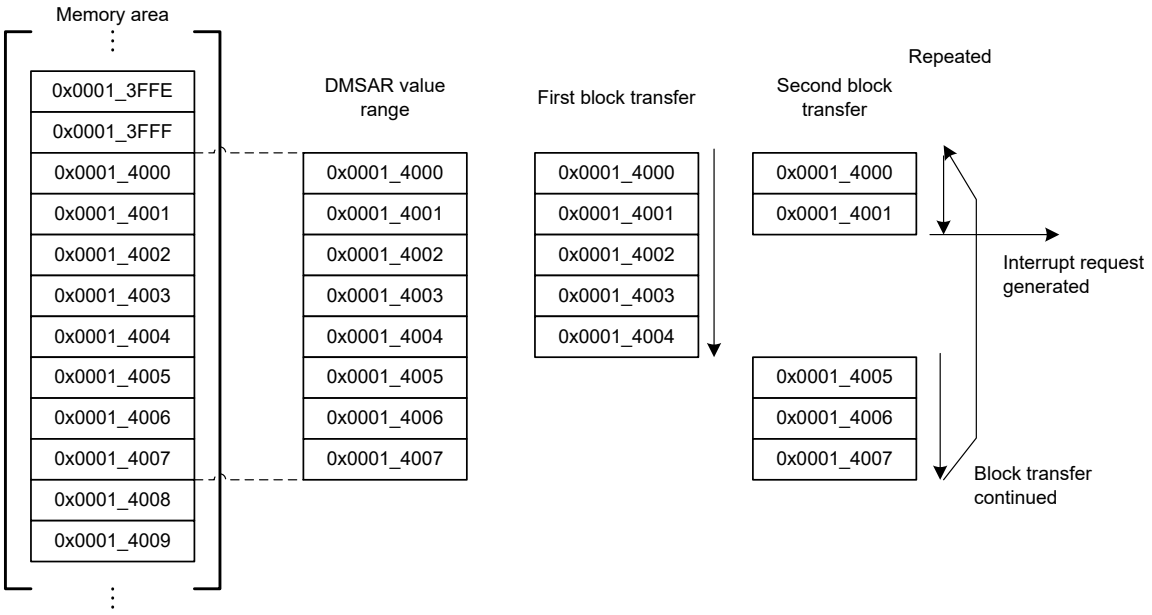

Figure 15.8 Example of extended repeat area function in block transfer mode

15.3.3 Free-running Function

The DMAC supports free-running function. This function allows to transfer repeatedly without reconfiguring in interrupt handler.

15.3.3.1 In Normal Transfer Mode

In normal transfer mode, when DMCRA.DMCRAL bits are set to 0x0000, no specific number of transfer operations is set; data transfer is performed with the transfer counter stopped.

For more information, see section 15.3.1.1. Normal Transfer Mode.

15.3.3.2 In Other Transfer Modes

In repeat, block and repeat-block transfer mode, the DMAC supports free-running function using the DMTMD.TKP bit. If the DMTMD.TKP bit is to be set to 1, the transfer is not stopped by completion of specified total number of transfer operations and reloads DMCRBH repeatedly.

Figure 15.9 show an example of block transfer operation without free-running function.

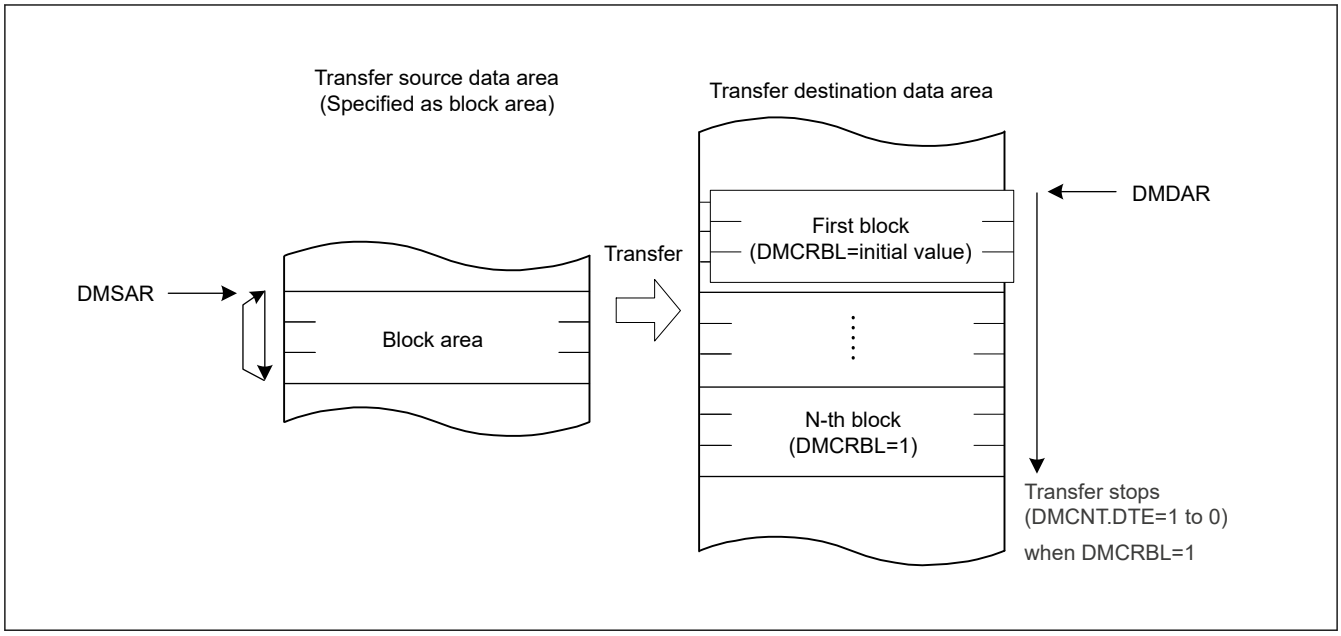

Figure 15.9 Operation in block transfer mode when DMTMD.TKP bit is set to 0

Figure 15.10 show an example of block transfer operation with free-running function.

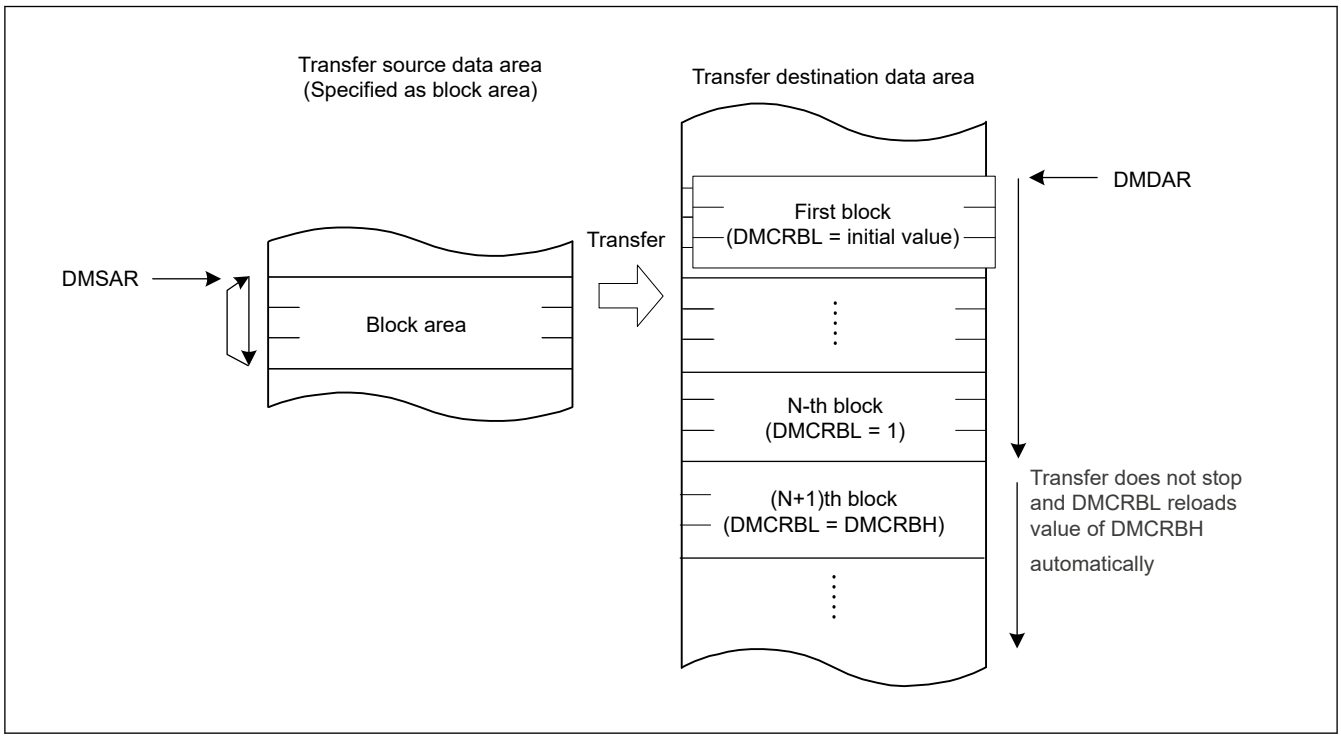

Figure 15.10 Operation in block transfer mode when DMTMD.TKP bit is set to 1

15.3.4 Address Update Function using Offset

The source and destination addresses can be updated by fixing, increment, decrement, or offset addition. In normal, repeat and block transfer mode, when the offset addition is selected, the offset specified by the DMA offset register (DMOFR) is added to the address every time the DMAC performs one data transfer. This function realizes a data transfer where addresses are allocated to separated areas.

Offset subtraction can also be realized by setting a negative value in DMOFR. In this case, the negative value must be 2's complement.

DMSBS or DMDBS are used instead of DMOFR in repeat-block transfer mode. For more information section 15.3.1.4. Repeat-Block Transfer Mode

Table 15.14 shows the address update method in each address update mode.

Table 15.14 Address update method in each address update mode

Address update mode	Settings of DMAMD.SM[1:0] and DMAMD.DM[1:0] for address update modes	Address update method (for different SZ[1:0] settings in DMTMD)		
		SZ[1:0] = 00b	SZ[1:0] = 01b	SZ[1:0] = 10b
Address fixed	00b	Fixed		
Offset addition	01b	+DMOFR*1		
Increment	10b	+1	+2	+4
Decrement	11b	–1	–2	–4

Note 1. When setting a negative value in the DMA Offset Register, the value must be in two's complement, obtained by the following formula:
two's complement of a negative offset value = ~ (offset) + 1 (~ = bit inversion)

15.3.4.1 Basic Transfer Using Offset Addition

Figure 15.11 shows an example of address updating using offset addition.

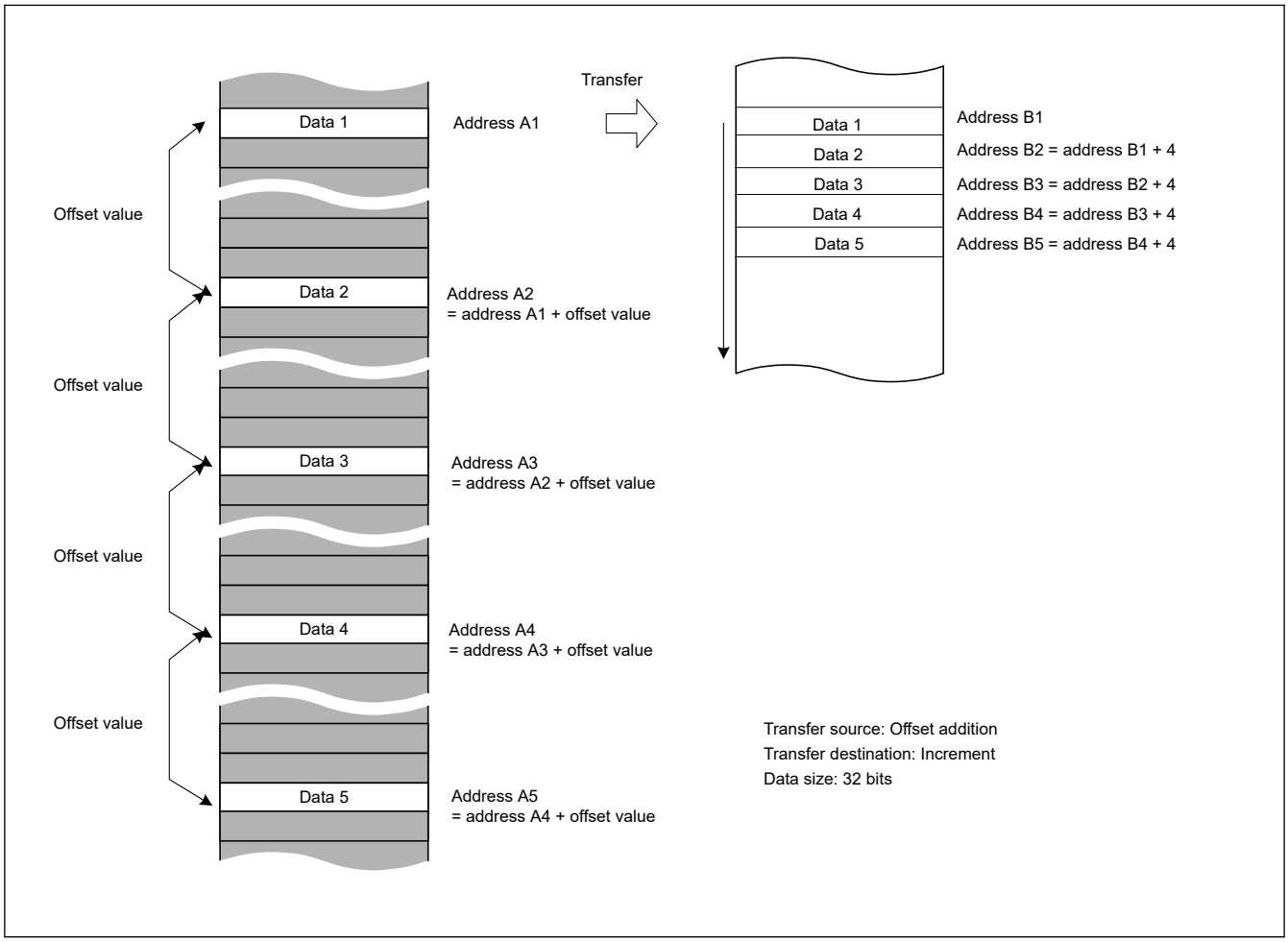

Figure 15.11 Example of address updating by offset addition

Figure 15.11 shows the setting of the following.

- The transfer data is 32 bits long.
- Offset addition is set as the transfer source address update mode.

- Increment is set as the transfer destination address update mode.

The second and subsequent data is each read from the transfer source address obtained by adding the offset value to the previous address. The data read from the addresses at the specified intervals is written to the continuous locations on the destination.

15.3.4.2 Example of XY Conversion Using Offset Addition

Figure 15.12 shows the XY conversion using offset addition in repeat transfer mode.

Settings are as follows:

- DMAMD.SM — Transfer source address update mode: Offset addition.
- DMAMD.DM — Transfer destination address update mode: Destination address is incremented.
- DMTMD.SZ — Transfer data size select: 32 bits.
- DMTMD.MD — Transfer mode select: Repeat transfer.
- DMTMD.DTS — Repeat area select: The source is specified as the repeat area.
- DMOFR — Offset address: 0x10.
- DMCRA — Repeat size: 0x4.
- DMINT.RPTIE — The repeat size end interrupt is enabled.

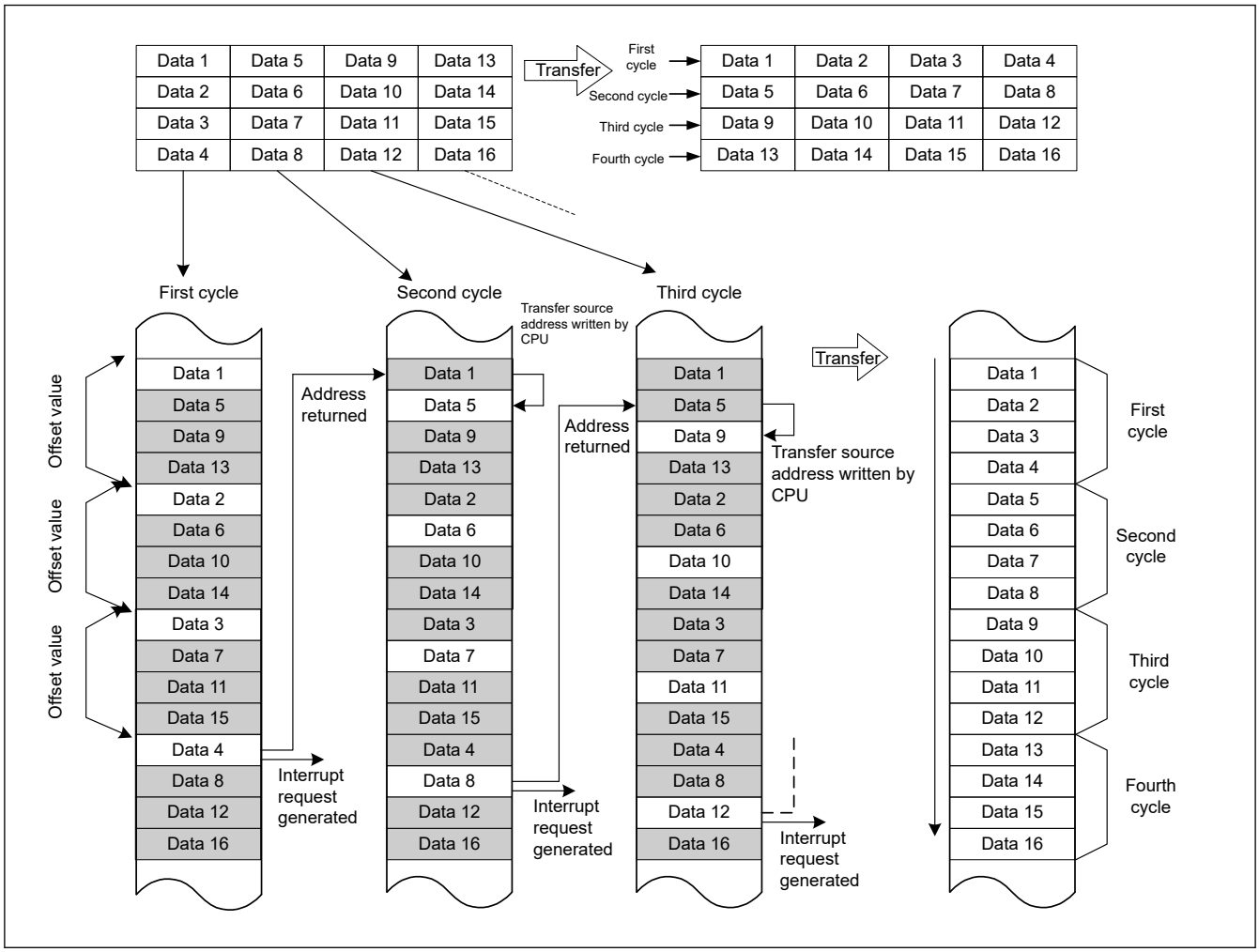

Figure 15.12 XY conversion operation using offset addition in repeat transfer mode

When a transfer starts, the offset value is added to the transfer source address every time data is transferred. The transfer data is written to continuous transfer destination addresses. When data 4 is transferred:

- The repeat size of data transfer is complete.
- The transfer source address returns to the transfer start address (the address of data 1 on the transfer source).
- A repeat size end interrupt is requested.

During the time this interrupt pauses the transfer, the following operations are performed.

- DMSAR — Rewrite the DMA transfer source address to the address of data 5
  (with the above example, the data 1 address + 4).
- DMCNT — Set the DTE bit to 1.

The DMA transfer is resumed from the state when the DMA transfer is stopped. After that, the operations described above are repeated until the transfer source data is transposed to the destination area (XY conversion).

Figure 15.13 shows a flowchart of the XY conversion.

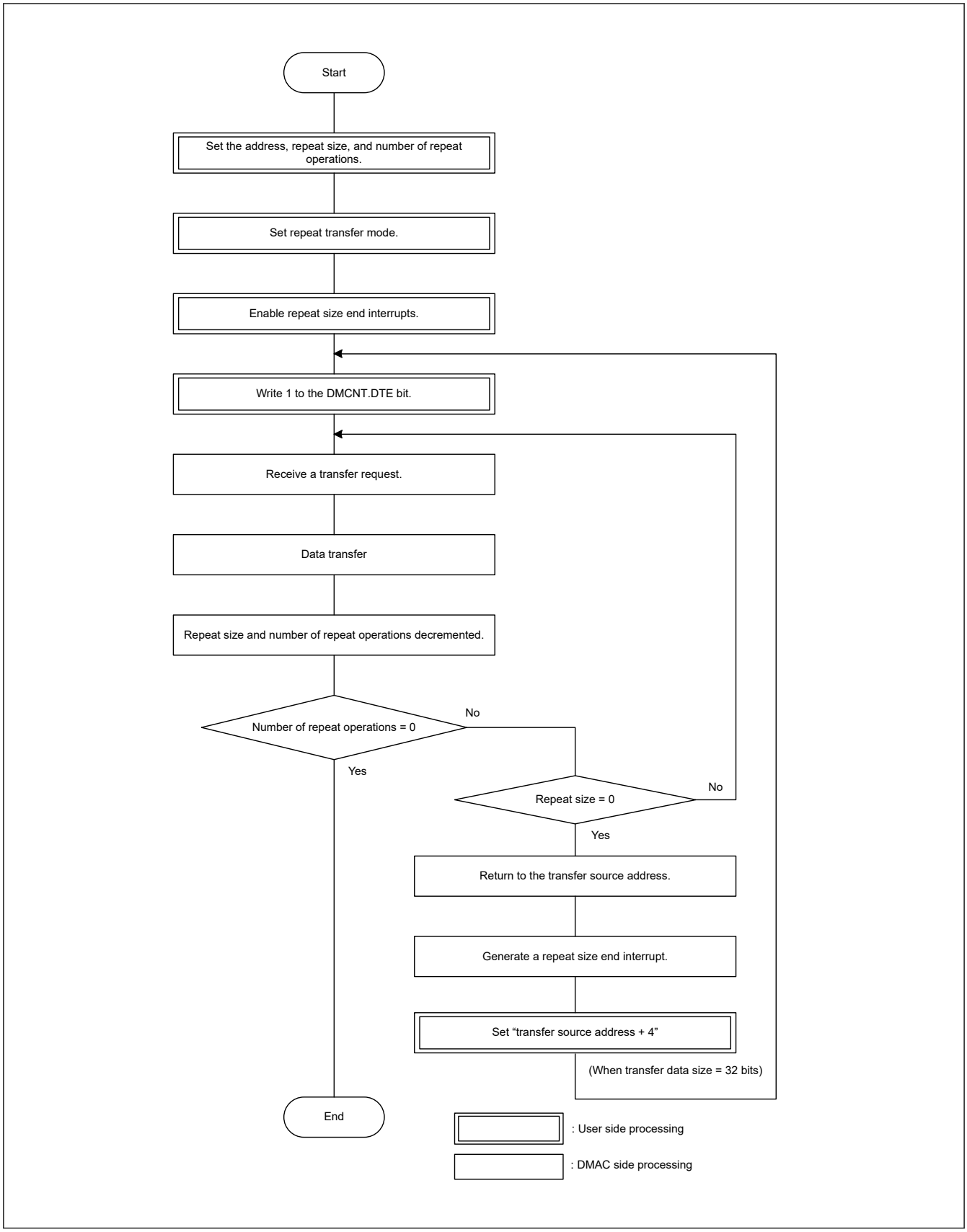

Figure 15.13 XY conversion flowchart using offset addition in repeat transfer mode

15.3.5 Address Update Function in Repeat-Block Transfer Mode

Repeat-block transfer mode is an extension of repeat transfer mode and block transfer mode. However, the detailed behavior of the address update is different from these two modes. Here are the details of the address update function in repeat-block transfer mode.

15.3.5.1 Fixed Address Mode

When DMAMD.SM[1:0] is set to 00b, the address update mode of the source is fixed address. And when DMAMD.DM[1:0] is set to 00b, the address update mode of the destination is fixed address.

In fixed address, the address is not updated from the initial value of DMSAR and DMDAR. If the block size (DMCRA) is larger than 1, the same data will be transferred multiple times for one request.

Figure 15.14 shows address update in fixed address.

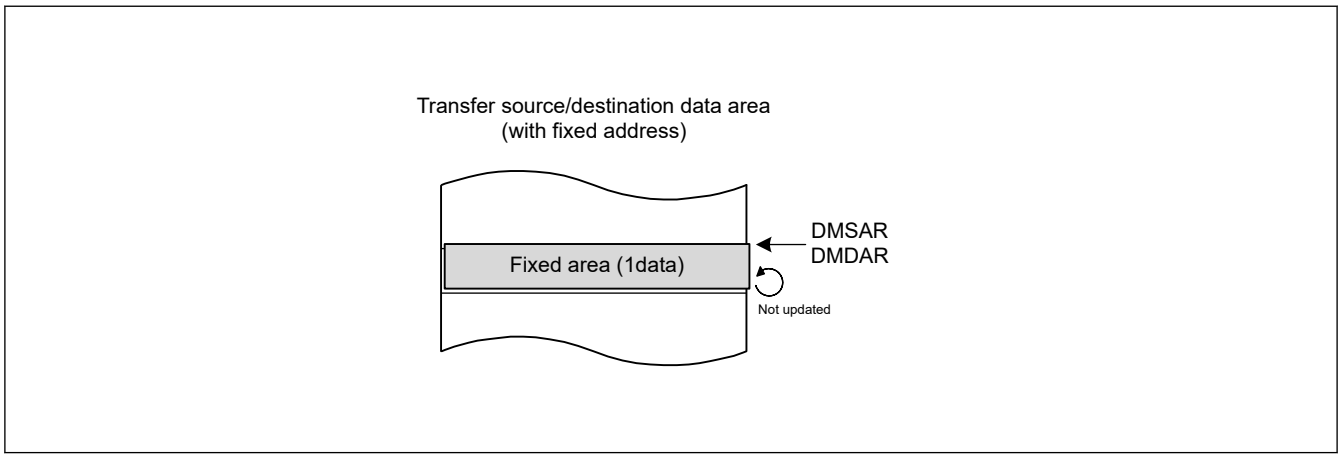

Figure 15.14 Address update in fixed address

15.3.5.2 Incremental and Decremental Address Mode

When DMAMD.SM[1:0] is set to 10b, the address update mode of the source is incremental address. And when DMAMD.DM[1:0] is set to 10b, the address update mode of the destination is incremental address. When DMAMD.SM[1:0] is set to 11b, the address update mode of the source is decremental address. And when DMAMD.DM[1:0] is set to 11b, the address update mode of the destination is decremental address.

In these update modes, the address is incremented or decremented according to the setting of DMTMD.SZ[1:0].

In these update modes DMSBS and DMDBS indicates a reload area. The unit of DMSBS and DMDBS is "number of data". At the start of transfer, DMSBSL and DMDBSL, which is the lower 16 bits of DMSBS and DMDBS, operates as a down counter and decrements each time one data transfer is performed. When the value becomes 1, DMSAR and DMDAR reloads the value of DMSRR and DMDRR.

Figure 15.15 shows address update in incremental address.

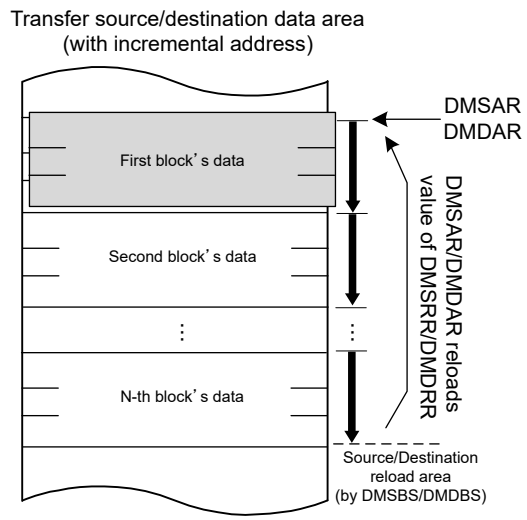

Figure 15.15 Address update in incremental address

15.3.5.3 Offset Addition Mode

When DMAMD.SM[1:0] is set to 01b, the address update mode of the source is offset addition. And when DMAMD.DM[1:0] is set to 01b, the address update mode of the destination is offset addition.

In offset addition, DMSBS and DMDBS indicates reload area and also works as an access offset value. Unlike other transfer modes, DMOFR register is not used in repeat-block transfer mode. In offset addition, the unit of DMSBS and DMDBS is the number of blocks. When the transfer starts, DMCRAL operates as a down counter, DMSAR and DMDAR reloads the value of DMSRR and DMDRR every time one block is transferred. In addition, DMSBSL and DMDBSL, which is the lower 16 bits of DMSBS and DMDBS, also operates as a down counter and decrements every time one block is transferred. When the DMSBS and DMDBS value becomes 1, DMSAR and DMDAR reloads the value of DMSRR and DMDRR.

When DMAMD.SADR and DMAMD.DADR is set to 0, offset addition operation of the same area is repeated. DMDAR only reloads DMDRR. Figure 15.16 shows address update in offset addition with DMAMD.SADR and DMAMD.DADR=0.

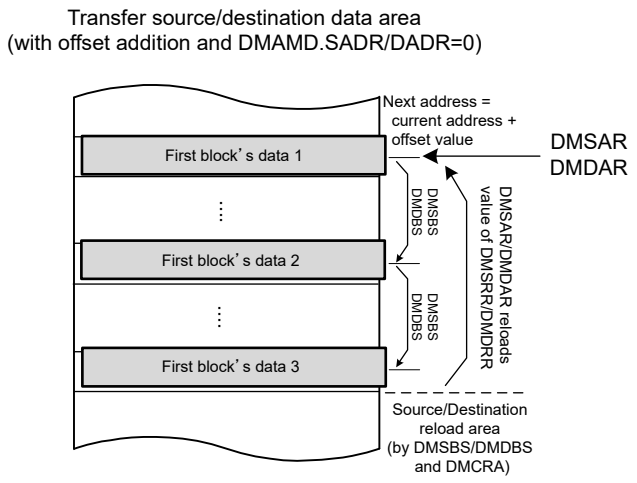

Figure 15.16 Address update in offset addition with DMAMD.SADR and DMAMD.DADR = 0

When DMAMD.SADR and DMAMD.DADR is set to 1, the address is incremented by one data unit after DMSRR and DMDRR is reloaded by DMCRAL=1. In other words, an index value ((DMDBSH-DMDBSL) × DataSize) is added to DMDAR after DMDRR is reloaded. This behavior is used to implement multiple ring buffers. Figure 15.17 shows address update in offset addition with DMAMD.SADR and DMAMD.DADR=1.

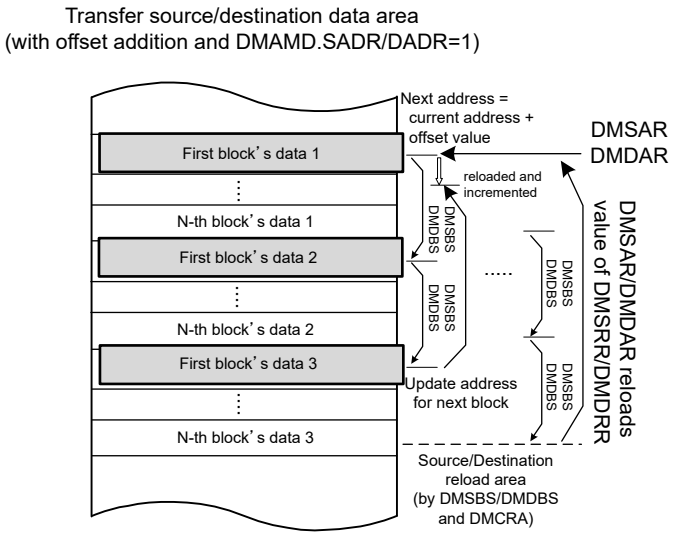

Figure 15.17 Address update in offset addition with DMAMD.SADR and DMAMD.DADR = 1

15.3.6 Example of Using Repeat-Block Transfer Mode

In repeat-block transfer mode, it is possible to realize repeated access to interval data and single or multiple ring buffers by combining the above address update modes. Following sections shows some usage examples.

15.3.6.1 Interval Address to Single Ring Buffer

Figure 15.18 shows an example of reading interval ADDRn registers (data register) of ADC12 module and storing it in single ring buffer. It transfers 2 data every 4 halfwords per 1 request. DMSAR is incremented by one data every one request. This can be achieved by setting the transfer source to offset addition and DMAMD.SADR=1, the block size (DMCRA) to 2, and the transfer source offset (DMSBS) to 4. Table 15.15 shows setting of this example.

Table 15.15 Setting of use case: from interval address to single ring buffer

Register	Value	Description
DMSAR, DMSRR	0x4017_0020	Initial source address
DMDAR, DMDRR	0x2000_0000	Initial destination address
DMTMD.SZ[1:0]	01b	Data size is halfword
DMAMD.SADR	1	Incremental source address after reloading
DMAMD.SM[1:0]	01b	Source update mode is offset addition
DMAMD.DM[1:0]	10b	Destination update mode is incremental address
DMCRAH, DMCRAL	2	Transfer block size
DMSBSH, DMSBSL	4	Source whole buffer size (unit is 'blocks') and Source access offset (unit is 'data')
DMDBSH, DMDBSL	N × 2 (DMCRA)	Destination buffer size (unit is 'data')

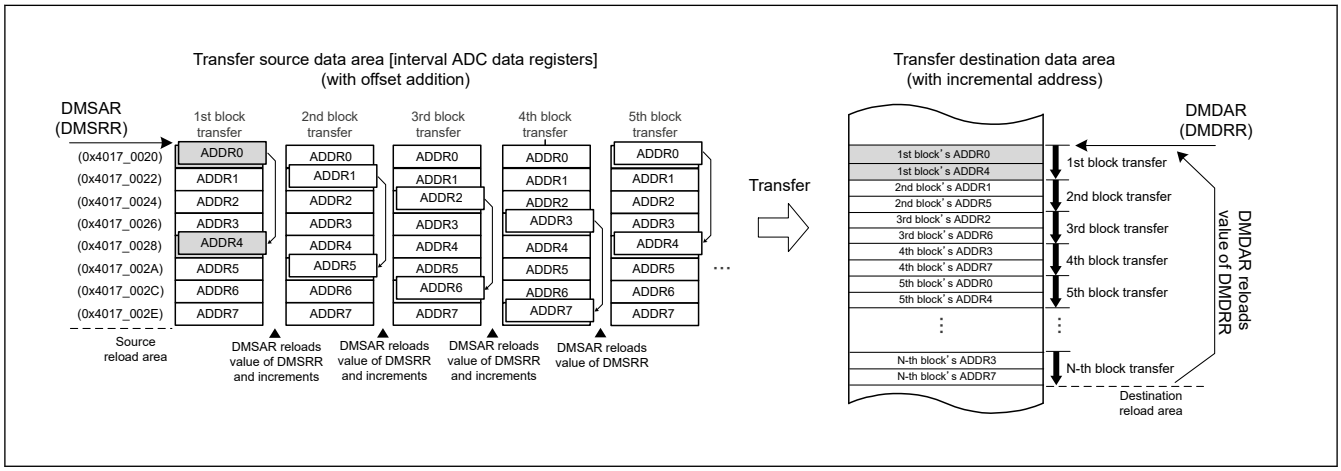

Figure 15.18 Example of use case: from interval address to single ring buffer

15.3.6.2 Unaligned Ring Buffer to Single Ring Buffer

Figure 15.19 shows an example of reading ADBUFn registers of ADC12 module (conversion result storage ring buffer) incrementally and storing it in single ring buffer. In this example, wrapping occurs because ADBUFn overflows in the fourth scan, but transfer source address of DMAC is also updated accordingly. This can be realized by setting the transfer source to incremental address and setting the DMSBS register to 16 which is the length of ADBUFn. This makes it possible to continue transfer without performing CPU processing using interrupts. Table 15.16 shows setting of this example.

Table 15.16 Setting of use case: from unaligned ring buffer to single ring buffer (1 of 2)

Register	Value	Description
DMSAR, DMSRR	0x4017_00B0	Initial source address
DMDAR, DMDRR	0x2000_0000	Initial destination address
DMTMD.SZ[1:0]	01b	Data size is halfword
DMAMD.SM[1:0]	10b	Source update mode is incremental address
DMAMD.DM[1:0]	10b	Destination update mode is incremental address

Table 15.16 Setting of use case: from unaligned ring buffer to single ring buffer (2 of 2)

Register	Value	Description
DMCRAH, DMCRAL	5	Transfer block size
DMSBSH, DMSBSL	16	Source buffer size (unit is ‘data’)
DMDBSH, DMDBSL	N × 5(DMCRA)	Destination buffer size (unit is ‘data’)

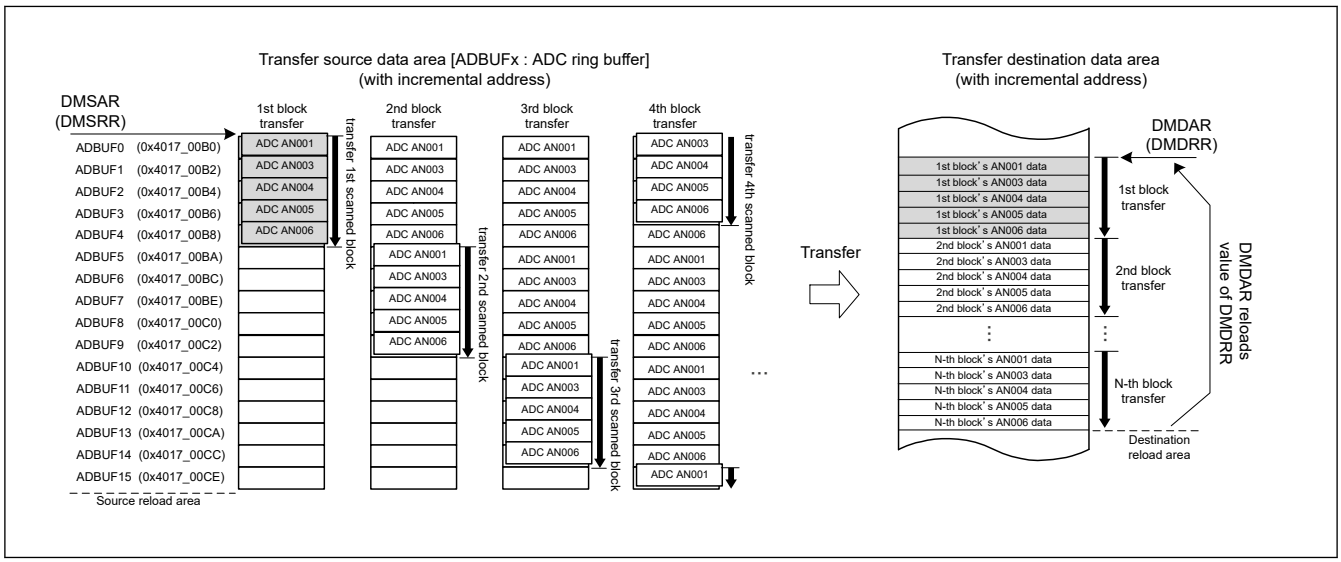

Figure 15.19 Example of use case: from unaligned ring buffer to single ring buffer

15.3.6.3 Single Block to Multi Ring Buffer

Figure 15.20 shows an example of storing the continuous ADDRn registers (data register) of ADC12 module individually in multiple ring buffers. In this example, a ring buffer in which only the first element (ADDR0) in a single block is arranged in transfer order is created at the destination. Also, in the next area, create a ring buffer in which only the second element (ADDR1) is arranged in transfer order. In the following case, create a ring buffer of length N, which is defined by DMDBS. And the number of data elements in the block is 3, which is defined by DMCRA. Table 15.17 shows setting of this example.

Table 15.17 Setting of use case: from single block to multi ring buffer

Register	Value	Description
DMSAR, DMSRR	0x4017_0020	Initial source address
DMDAR, DMDRR	0x2000_0000	Initial destination address
DMTMD.SZ[1:0]	01b	Data size is halfword
DMAMD.DADR	1	Incremental destination address after reloading
DMAMD.SM[1:0]	10b	Source update mode is incremental address
DMAMD.DM[1:0]	01b	Destination update mode is offset addition
DMCRAH, DMCRAL	3	Transfer block size
DMSBSH, DMSBSL	3	Source buffer size (unit is ‘data’)
DMDBSH, DMDBSL	N	Destination whole buffer size (unit is ‘blocks’) and Destination access offset (unit is ‘data’)

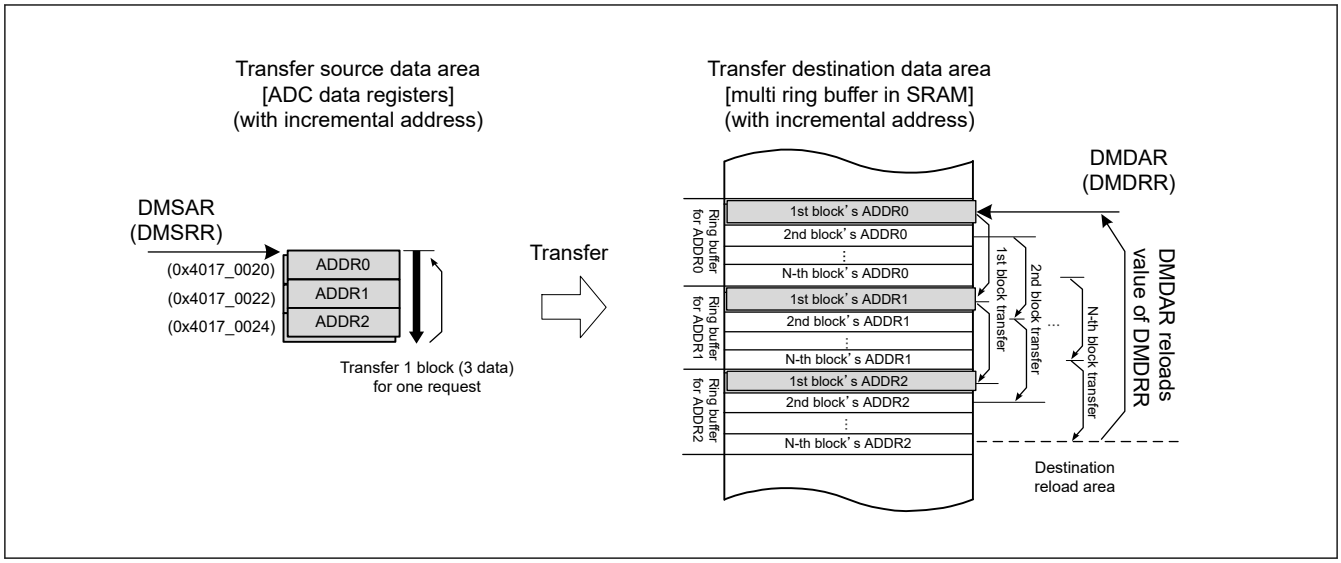

Figure 15.20 Example of use case: from single block to multi ring buffer

15.3.7 Activation Sources

Software, interrupt requests from the peripheral modules, and external interrupt requests can all be specified as DMAC activation sources. Set the DMTMD.DCTG[1:0] bits to select the activation source.

15.3.7.1 DMAC Activation by Software

When DMA transfer is started by software, follow below procedure.

1. Set the DMTMD.DCTG[1:0] bits to 00b.
2. Set the DMCNT.DTE bit to 1 (DMA transfer is enabled).
3. Set the DMAST.DMST bit set to 1 (DMAC activation enabled).
4. Set the DMREQ.SWREQ bit to 1 (DMA requested).

When the DMAC is activated by software while the DMREQ.CLRS bit is 0, the DMREQ.SWREQ bit is cleared to 0 after data transfer is started in response to a DMA transfer request.

When the DMAC is activated by software while the CLRS bit is 1, the SWREQ bit is not cleared to 0 after data transfer is started. In this case, a DMA transfer request is issued again after completion of a transfer.

15.3.7.2 DMAC Activation through Interrupt Requests from On-Chip Peripheral Modules or External Interrupt Requests

You can specify interrupt requests from on-chip peripheral modules and external interrupt requests as DMAC activation sources. The activation sources can be selected individually for each channel in ICU.DELSRn.DELS[8:0] (n = 0 to 7).

To start DMA transfer through an interrupt request from an on-chip peripheral module or an external interrupt request, follow the procedures as indicated below.

1. Set ICU.DELSRn.DELS[8:0] (n = 0 to 7) to the event number (select the DMAC event link).
2. Set the DMTMD.DCTG[1:0] bits to 01b (interrupts from the peripheral modules and the external interrupt pins).
3. Set the DMCNT.DTE bit to 1 (enable DMA transfer).
4. Set the DMAST.DMST bit set to 1 (DMAC activation enabled).

For interrupt requests specified as DMAC activation sources, see Table 12.3, in section 12, Interrupt Controller Unit (ICU).

15.3.8 Operation Timing

The following timing charts show the minimum number of execution cycles.

Figure 15.21 and Figure 15.22 show DMAC operation timing examples.

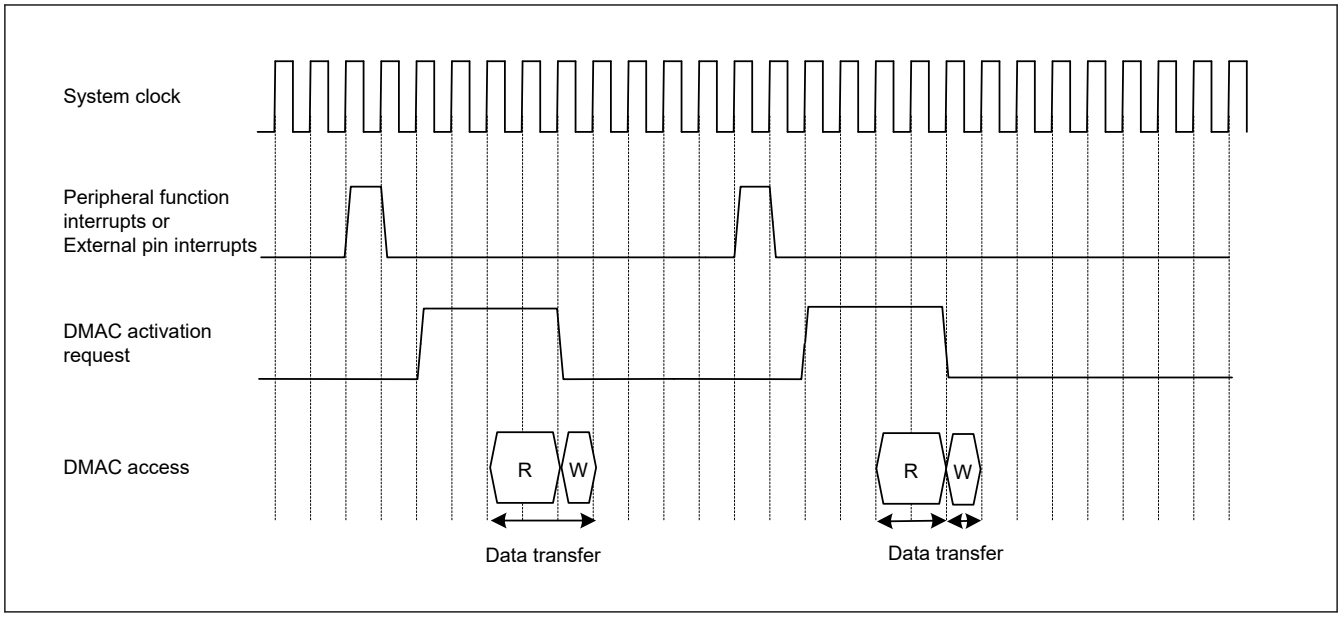

Figure 15.21 DMAC operation timing example 1 with DMAC activation by Interrupt from peripheral module or external interrupt input pin, in normal transfer mode or repeat transfer mode

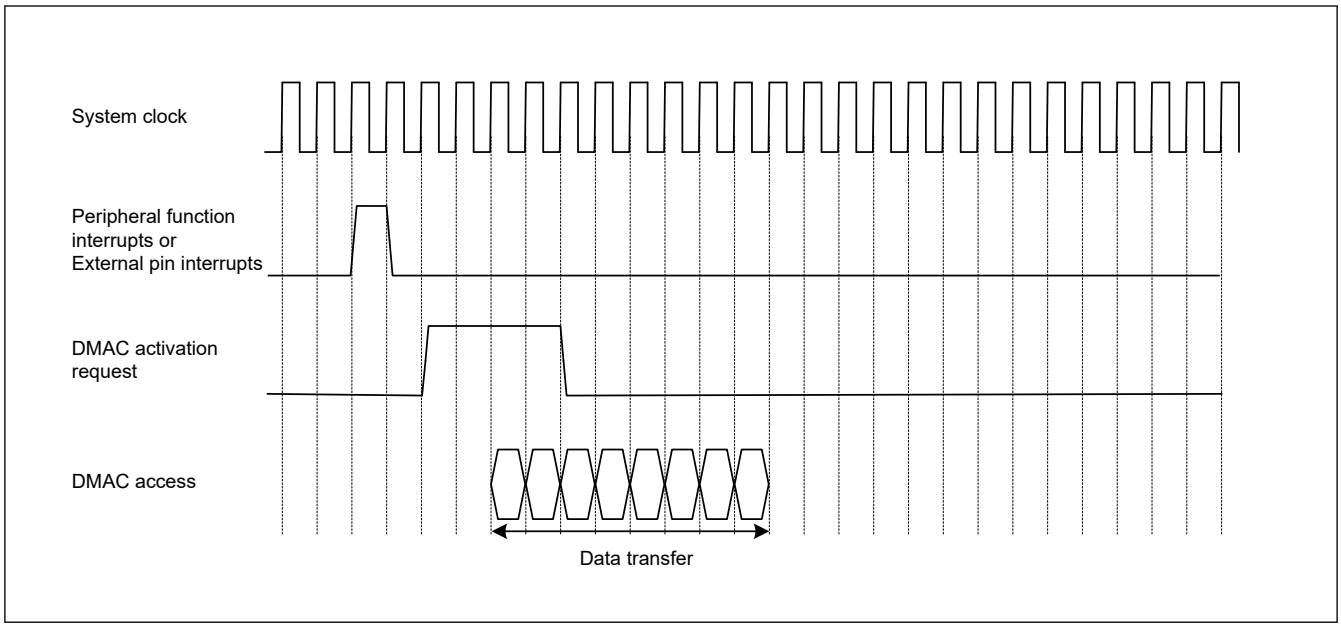

Figure 15.22 DMAC operation timing example 2 with DMAC activation by interrupt from peripheral module or external interrupt input pin, in block transfer mode with block size = 4

15.3.9 DMAC Execution Cycles

Table 15.18 lists execution cycles in one DMAC data transfer operation.

Table 15.18 DMAC execution cycles

Transfer mode	Data transfer (read)	Data transfer (write)
Normal	Cr+1	Cw
Repeat	Cr+1	Cw
Block*1	P × Cr	P × Cw

Note: P: Block size (DMCRAH register setting)
Cr: Data read destination access cycle
Cw: Data write destination access cycle

Note 1. This is the case when the block size is 2 or more. When the block size is 1, normal transfer cycle is applied.

Cr and Cw depend on the access destination. For the number of cycles for each access destination, see section 38, SRAM, section 39, Flash Memory, and section 13, Buses. The frequency ratio of the system clock and the peripheral clock is also taken into consideration.

The unit for +1 in "Data Transfer (Read)" column is one system clock cycle (ICLK). For the operation example, see section 15.3.8. Operation Timing.

15.3.10 Activating the DMAC

Table 15.19 shows the register setting procedure of normal, repeat and block transfer mode and Table 15.20 shows register setting procedure of repeat-block transfer mode.

Table 15.19 Register setting procedure of normal transfer mode, repeat transfer mode and block transfer mode (1 of 2)

No.	Step Name	Description
1	Disable the peripheral function as the DMACn request source.	To use peripheral function interrupts as DMAC activation sources. Disable the control register for the peripheral function.
2	Disable the IRQn pin as the DMACn request source.	To use external pin interrupts as DMAC activation sources.
3	Set the DMACn Event Link select (ICU.DELSRn.DELS[8:0]) to 0x000.	Disable the DMACn request.
4	Clear the DMCNT.DTE bit to 0.	Disable DMA transfer.
5	Set the interrupt request as a DMACn request source in the DMAC Event Link Setting Register (ICU.DELSRn) by using the ICU.	To use internal peripheral interrupts or external pin interrupts as DMAC activation sources. Enable the interrupt bit for the activation source. Set the DMACn activation source.
6	Set the peripheral module as a DMACn request source.	To use peripheral function interrupt as a DMAC activation source. Set the control register for the peripheral function without starting it.
7	Set the IRQn pin function by using the ICU.	To use external pin interrupt as a DMAC activation source. Set the IRQn pin function by using the Interrupt Controller Unit.
8	Set the DMAMD.DM[1:0] bits. Set the DMAMD.SM[1:0] bits. Set the DMAMD.DARA[4:0] bits. Set the DMAMD.SARA[4:0] bits.	Set the Transfer destination address update mode bits. Set the Transfer source address update mode bits. Set the Transfer destination address extended repeat area bits. Set the Transfer source address extended repeat area bits.
9	Set the DMTMD.DCTG[1:0] bits. Set the DMTMD.SZ[1:0] bits. Set the DMTMD.DTS[1:0] bits. Set the DMTMD.MD[1:0] bits. Set the DMTMD.TKP bit.	Set the Transfer request select bits. Set the Data transfer size bits. Set the Repeat area select bits. Set the Transfer mode select bits. Set the transfer keeping select bit.
10	Set the DMSAR register. Set the DMDAR register. Set the DMCRA register.	Set the transfer source start address. Set the transfer destination start address. Set the number of transfer operations.
11	Set the DMCRB register.	To use block transfer mode or repeat transfer mode. Set the number of block transfer operations.
12	Set the DMOFR register.	To use the address update function with offset. Set the offset value.
13	Set the DMINT.DTIE bit to 1.	To use the DMA transfer end interrupts. Enable DMACn transfer end interrupts.
14	Set the DMINT.RPTIE bit. Set the DMINT.SARIE bit. Set the DMINT.DARIE bit. Set the DMINT.ESIE bit to 1.	To use the DMA transfer escape end interrupts Set the repeat size end interrupt. Set the transfer source address extended repeat area overflow interrupt. Set the transfer destination address extended repeat area overflow interrupt. Enable the DMA transfer escape end interrupt.
15	Set the DMCNT.DTE bit to 1.	Enable DMA transfer.
16	Set the DMAST.DMST bit to 1.	Enable DMAC operation. *1 Common settings for DMAC

Table 15.19 Register setting procedure of normal transfer mode, repeat transfer mode and block transfer mode (2 of 2)

No.	Step Name	Description
17	Start the peripheral function as a DMACn request source.	To use peripheral function interrupt as a DMAC activation source
18	Enable the IRQn pin as a DMACn request source.	To use external pin interrupt as a DMAC activation source
19	End of initial settings.	For activation by software On completion of the initial settings, writing 1 to the DMA software start bit (DMREQ.SWREQ) starts DMA transfer.

Note: n: DMAC channel (n = 0 to 7)
Note 1. The DMAST.DMST bit setting does not necessarily have to follow the settings for the individual activation sources.

Table 15.20 Register setting procedure of repeat-block transfer mode (1 of 2)

No.	Step name	Description
1	Disable the peripheral function as the DMACn request source.	To use peripheral function interrupts as DMA activation sources. Disable the control register for the peripheral function.
2	Disable the IRQ pin as the DMACn request source.	To use external pin interrupts as DMA activation sources.
3	Set the DMACn Event Link select (ICU.DELSRn.DELS[8:0]) to 0x000.	Disable the DMACn request.
4	Clear the DMCNT.DTE bit to 0.	Disable DMACn transfer.
5	Set the interrupt request as a DMACn request source in the DMACn Event Link Setting Register (ICU.DELSRn) by using the ICU.	To use internal peripheral interrupts or external pin interrupts as DMA activation sources. Enable the interrupt bit for the activation source. Set the DMACn activation source.
6	Set the peripheral module as a DMACn request source.	To use peripheral function interrupt as a DMA activation source. Set the control register for the peripheral function without starting it.
7	Set the IRQ pin function by using the Interrupt Controller Unit.	To use external pin interrupt as a DMA activation source. Set the IRQ pin function by using the Interrupt Controller Unit.
8	Set the DMAMD.DM[1:0] bits. Set the DMAMD.SM[1:0] bits. Set the DMAMD.DADR bit. Set the DMAMD.SADR bit.	Set the Transfer destination address update mode bits. Set the Transfer source address update mode bits. Set the Transfer destination address update select after reloading. Set the Transfer source address update select after reloading.
9	Set the DMTMD.DCTG[1:0] bits. Set the DMTMD.SZ[1:0] bits. Set the DMTMD.DTS[1:0] bits. Set the DMTMD.MD[1:0] bits. Set the DMTMD.TKP bit.	Set the Transfer request select bits. Set the Data transfer size bits. Set the Repeat area select bits. Set the Transfer mode to repeat-block transfer mode. Set the transfer keeping select bit.
10	Set the DMSAR register. Set the DMDAR register. Set the DMSRR register. Set the DMDRR register. Set the DMCRA register. Set the DMCRB register.	Set the transfer source start address. Set the transfer destination start address. Set the initial value of source start address. Set the initial value of destination start address. Set the number of transfer operations. Set the number of block transfer operations.
11	Set the DMSBS register. Set the DMDBS register.	To use the address update function with incremental, decremental or offset. Set the source buffer size and access offset. Set the destination buffer size and access offset.
12	Set the DMINT.DTIE bit to 1.	To use DMA transfer end interrupts. Enable DMACn transfer end interrupts.
13	Set the DMCNT.DTE bit to 1.	Enable DMACn transfer.
14	Set the DMAST.DMST bit to 1.	Enable DMAC operation. *1
15	Start the peripheral function as a DMACn request source.	To use peripheral function interrupt as a DMA activation source.
16	Enable the IRQ pin as a DMACn request source.	To use external pin interrupt as a DMA activation source.

Table 15.20 Register setting procedure of repeat-block transfer mode (2 of 2)

No.	Step name	Description
17	End of initial settings.	For activation by software. On completion of the initial settings, writing 1 to the DMA software start bit (DMREQ.SWREQ) starts DMA transfer.

Note: n: DMAC channel (n = 0 to 7)
Note 1. The DMAST.DMST bit setting does not necessarily have to follow the settings for the individual activation sources.

15.3.11 Starting DMA Transfer

To enable the DMA transfer, set the DMCNT.DTE bit to 1 (enable the DMA transfer), and then set the DMAST.DMST bit to 1 (enable the DMAC activation).

New activation requests are not accepted during the transfer of another DMAC channel or DTC. When the preceding transfer is complete, channel arbitration selects the DMA transfer request of the highest priority channel, and the DMA transfer of that channel starts. When the DMA transfer starts, the DMSTS.ACT flag is set to 1 (the DMAC is in the active state).

15.3.12 Registers during DMA Transfer

The DMAC registers are updated by a DMA transfer. The value to be updated differs according to the other settings and the transfer state. The registers to be updated are DMSAR, DMDAR, DMCRA, DMCRB, DMSBS, DMDBS, DMCNT, and DMSTS.

DMA Source Address Register (DMSAR)

When data has been transferred in response to one transfer request, the contents of DMSAR are updated to the address to be accessed by the next transfer request.

For details on register update operation in each transfer mode, see Table 15.5 to Table 15.13.

DMA Destination Address Register (DMDAR)

When data has been transferred in response to one transfer request, the contents of DMDAR are updated to the address to be accessed by the next transfer request.

For details on register update operation in each transfer mode, see Table 15.5 to Table 15.13.

DMA Transfer Count Register (DMCRA)

When data has been transferred in response to one transfer request, the count value is updated. The update operation depends on the transfer mode selected.

For details on register update operation in each transfer mode, see Table 15.5 to Table 15.13.

DMA Block Transfer Count Register (DMCRB)

When data has been transferred in response to one transfer request, the count value is updated. The update operation depends on the transfer mode selected.

For details on register update operation in each transfer mode, see Table 15.5 to Table 15.13.

DMA Source Buffer Size Register (DMSBS)

When data has been transferred in response to one transfer request, the count value is updated. The update operation depends on the transfer mode selected.

For details on register update operation in each transfer mode, see Table 15.8 to Table 15.13.

DMA Destination Buffer Size Register (DMDBS)

When data has been transferred in response to one transfer request, the count value is updated. The update operation depends on the transfer mode selected.

For details on register update operation in each transfer mode, see Table 15.8 to Table 15.13.

DMA Transfer Enable Bit (DMCNT.DTE)

Although the DMCNT.DTE bit enables or disables data transfer by the register write access, it is automatically cleared to 0 by the DMAC according to the DMA transfer state.

The conditions for clearing this bit by the DMAC are as follows:

- When the specified total volume of data transfer is completed
- When DMA transfer is stopped by the repeat size end interrupt
- When DMA transfer is stopped by the extended repeat area overflow interrupt
- When DMA transfer error occurs

Writing to the registers for the channels when the corresponding DMCNT.DTE bit is set to 1 is prohibited (except for DMCNT). In this case, writing must be performed after the bit is cleared to 0.

DMAC Active Flag (DMSTS.ACT)

The DMSTS.ACT flag indicates whether the DMACn is in the idle or active state.

This flag is set to 1 when the DMAC starts data transfer, and is cleared to 0 when data transfer in response to one transfer request is completed.

Even when DMA transfer is stopped by writing 0 to the DMCNT.DTE bit during DMA transfer, this flag remains 1 until DMA transfer is completed.

Transfer End Interrupt Flag (DMSTS.DTIF)

The DMSTS.DTIF flag is set to 1 after DMA transfer of the total transfer size of data is completed.

When both this flag and the DMINT.DTIE bit are set to 1, a transfer end interrupt is requested.

This flag is set to 1 when the DMA transfer bus cycle is completed and the DMSTS.ACT flag is cleared to 0 indicating the DMA transfer end.

This flag is automatically cleared to 0 when the DMCNT.DTE bit is set to 1 during the interrupt handling.

Transfer Escape End Interrupt Flag (DMSTS.ESIF)

The DMSTS.ESIF flag is set to 1 when a repeat size end interrupt or extended repeat area overflow interrupt is requested. When this bit and the DMINT.ESIE bit are set to 1, a transfer escape end interrupt is requested.

This flag is set to 1 when the bus cycle of the DMA transfer having caused the interrupt request is completed and the DMSTS.ACT flag is cleared to 0 indicating the DMA transfer end.

This flag is automatically cleared to 0 when the DMCNT.DTE bit is set to 1 during an interrupt handling.

Before sending an interrupt request from the DMAC to the CPU or the DTC, the interrupt control register must be set.

For details, see section 12, Interrupt Controller Unit (ICU).

15.3.13 Channel Priority

When multiple DMA transfer requests are present, the DMAC determines the priority of channels that have DMA transfer requests.

- The channel priority is fixed as follows: Channel 0 > Channel 1 > Channel 2 > Channel 3… > Channel 7 (Channel 0: Highest).

When a DMA transfer request is generated during data transfer, channel arbitration is started after the final data has been transferred, and DMA transfer of the higher-priority channel starts.

15.3.14 Channel Security

The security attribute of transfer access of DMACn, security attribute of access to register of DMACn, security attribute of access to the ICU.DELSRn register are controlled by ICUSARC.SADMACn bit. For details on the ICUSARC register, see section 12, Interrupt Controller Unit (ICU).

When the ICUSARC.SADMACn bit is 0, transfer of DMACn is Secure access for both read and write. At the same time, the registers of channel n and the DELSRn register are protected from a Non-secure access.

When the ICUSARC.SADMACn bit is 1, transfer of DMACn is Non-secure access for both read and write. At the same time, the registers of channel n and the DELSRn register are Non-secure attributes.

Do not write to the ICUSARC.SADMACn bit while DMA transfer of same channel is enabled or a bus master is writing to the DMA registers of same channel.

Figure 15.23 shows security attribute about each DMAC channels.

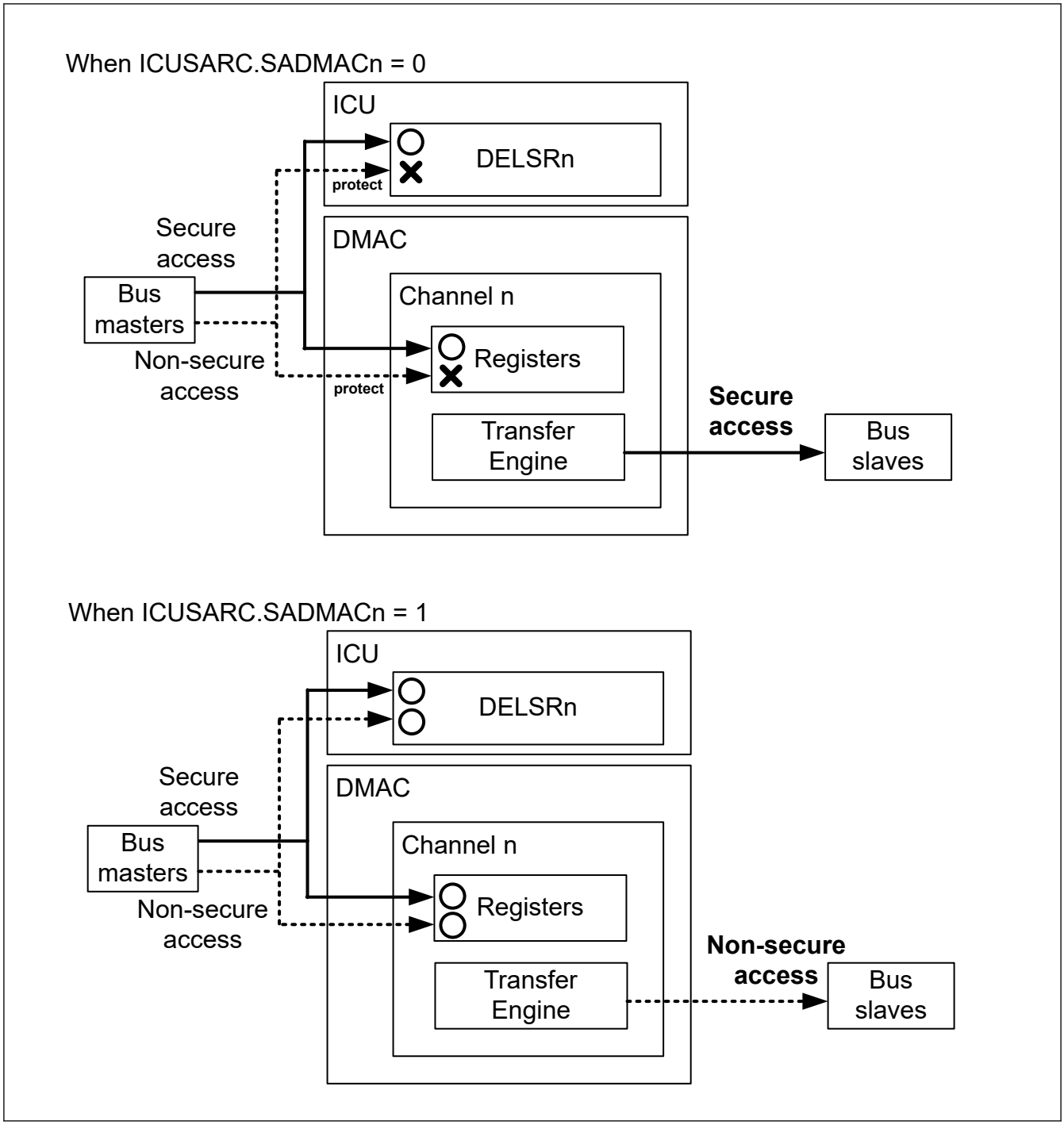

Figure 15.23 Security attribute about each DMAC channels

15.3.15 Master TrustZone Filter in DMAC

DMAC has the Master TrustZone Filter. The MasterTrustZone Filter in DMAC can detect security areas of Flash area (code flash and data flash) and SRAM area (ECC/Parity RAM) defined by IDAU. When setting non-secure channel to access

those addresses, it can detect security violation. Access of violation address is not performed. Detected error is handled as Master TrustZone Filter error.

15.4 Ending DMA Transfer

The operation for ending DMA transfer depends on the transfer end conditions. When DMA transfer ends, the DMCNT.DTE bit and the DMSTS.ACT flag are changed from 1 to 0, indicating that DMA transfer has ended.

15.4.1 Transfer End by Completion of Specified Total Number of Transfer Operations

(1) In Normal Transfer Mode (DMTMD.MD[1:0] = 00b)

When the value of DMCRAL changes from 1 to 0, DMA transfer ends on the corresponding channel, and the DMCNT.DTE bit is cleared to 0 and the DMSTS.DTIF flag is set to 1 at the same time. If the DMINT.DTIE bit is 1 at this time, a transfer end interrupt request is issued to the CPU or the DTC.

(2) In Repeat Transfer Mode (DMTMD.MD[1:0] = 01b)

When the value of DMCRBL changes from 1 to 0, DMA transfer ends on the corresponding channel, and the DMCNT.DTE bit is cleared to 0 and the DMSTS.DTIF flag is set to 1 at the same time. If the DMINT.DTIE bit is 1 at this time, an interrupt request is issued to the CPU or the DTC.

If the DMTMD.TKP bit is 1 (in free-running function), the DMSTS.DTIF bit is set to 1, but the DMCNT.DTE bit is not cleared to 0.

(3) In Block Transfer Mode (DMTMD.MD[1:0] = 10b)

When the value of DMCRBL changes from 1 to 0, DMA transfer ends on the corresponding channel, and the DMCNT.DTE bit is cleared to 0 and the DMSTS.DTIF flag is set to 1 at the same time. If the DMINT.DTIE bit is 1 at this time, an interrupt request is issued to the CPU or the DTC.

Before sending an interrupt request from the DMAC to the CPU or the DTC, the interrupt control register must be set.

For details, see section 12, Interrupt Controller Unit (ICU).

If the DMTMD.TKP bit is 1 (in free-running function), the DMSTS.DTIF bit is set to 1, but the DMCNT.DTE bit is not cleared to 0.

(4) In Repeat-Block Transfer Mode (DMTMD.MD[1:0] = 11b)

When the value of DMCRBL changes from 1 to 0, DMA transfer ends on the corresponding channel, and the DMCNT.DTE bit is cleared to 0 and the DMSTS.DTIF flag is set to 1 at the same time. If the DMINT.DTIE bit is 1 at this time, an interrupt request is issued to the CPU or the DTC.

Before sending an interrupt request from the DMAC to the CPU or the DTC, the interrupt control register must be set. For details, see section 12, Interrupt Controller Unit (ICU).

If the DMTMD.TKP bit is 1 (in free-running function), the DMSTS.DTIF bit is set to 1, but the DMCNT.DTE bit is not cleared to 0.

15.4.2 Transfer End by Repeat Size End Interrupt

In repeat transfer mode, a repeat size end interrupt is requested when transfer of a 1-repeat size of data is completed while the DMINT.RPTIE bit is set to 1. When the interrupt is requested to complete DMA transfer, the DMCNT.DTE bit is cleared to 0 and the DMSTS.ESIF flag is set to 1 even if the DMTMD.TKP bit is 1 (in free-running function). If the DMINT.ESIE bit is 1 at this time, an interrupt request is issued to the CPU or the DTC. Here, the transfer can be resumed by writing 1 to the DMCNT.DTE bit.

A repeat size end interrupt can be requested also in block transfer mode. In block transfer mode, the interrupt is requested in the same way as in repeat transfer mode when transfer of a 1-block size data is completed.

Repeat size end interrupt cannot be requested in repeat-block transfer mode.

Before sending an interrupt request from the DMAC to the CPU or the DTC, the interrupt control register must be set. For details, see section 12, Interrupt Controller Unit (ICU).

15.4.3 Transfer End by Interrupt on Extended Repeat Area Overflow

When an overflow on the extended repeat area occurs while the extended repeat area is specified and the DMINT.SARIE or DMINT.DARIE bit is set to 1 even if the DMTMD.TKP bit is 1 (in free-running function), an interrupt by an extended repeat area overflow is requested. When the interrupt is requested, the DMA transfer is terminated, the DMCNT.DTE bit is cleared to 0, and the ESIF flag in DMSTS is set to 1. If the DMINT.ESIE bit is 1 at this time, an interrupt request is issued to the CPU or the DTC.

Even if an interrupt by an extended repeat area overflow is requested during a read cycle, the following write cycle is performed.

In block transfer mode, even if an interrupt by an extended repeat area overflow is requested during a 1-block transfer, the remaining data in the block is transferred; transfer is terminated after a block transfer.

An interrupt by an extended repeat area overflow cannot be requested in repeat-block transfer mode.

Before sending an interrupt request from the DMAC to the CPU or the DTC, the interrupt control register must be set. For details, see section 12, Interrupt Controller Unit (ICU).

15.5 Processing on DMA Transfer Error

DMA transfer error occurs with the Master TrustZone Filter error in DMAC, the Slave TrustZone Filter error, the Master MPU error, the Slave Bus Error or the Illegal Access Error. If the access error occurs during the DMA transfer, the DMAC immediately stops the transfer of error occurred channel. At this time, the ICU setting of the corresponding channel is also cleared. If there is a request other than the channel which caused the error, it will be re-arbitration as it is.

When the transfer error occurs, DMCNT.DTE of the error causing channel is set to 0. Also, the error response is informed to the ICU.DELSRn of the corresponding channel is cleared. Write back to each register is not performed. Furthermore, it generates the error response detection interrupt request (DMA_TRANSERR) to notify that an error has occurred by DMAC/DTC transfer.

When the Master TrustZone Filter error occurs, the Slave TrustZone error occurs or the Master MPU error occurs, it is possible to confirm the error information of DMAC by selecting NMI. The DMAC error channel register is cleared by selecting reset. Under the conditions where NMI is generated due to transfer error in DMAC, two interrupts(NMI and DMA_TRANSERR) are generated. In this case, NMI always responds first.

The error response detection interrupt request (DMA_TRANSERR) occurs when the Slave Bus error or the Illegal Access error occurs. Furthermore, it occurs after NMI when the error response detection interrupt request (DMA_TRANSERR) is not cleared in NMI handler.

section 15.5.1. Processing on NMI handler describes how to confirm the error information of the DMAC in the NMI handler.

section 15.5.2. Processing on Error response detection interrupt request (DMA_TRANSERR) handler describes how to confirm the error information of the DMAC in the DMA_TRANSERR handler.

Interrupts and the error information generated due to transfer errors are shown in section 15.6.2. Transfer Error Interrupt.

15.5.1 Processing on NMI handler

The cause of NMI due to the DMA transfer error is the Master TrustZone Filter error, the Slave TrustZone Filter error or the Master MPU error. When NMI occurs due to the DMAC transfer error, the error response detection interrupt request (DMA_TRANSERR) occurs after the end of NMI handler. It is possible to confirm the cause of the error and the DMAC channel in which the error occurred. When NMI occurs, perform the necessary processing according to the flow described in section 12, Interrupt Controller Unit (ICU).

Figure 15.24 shows the flow to confirm the channel that caused the Master TrustZone Filter error in DMAC.

Figure 15.25 shows the flow to confirm the channel that caused the Slave TrustZone Filter error in DMAC.

Figure 15.26 shows the flow to confirm the channel and Security Attribute that caused the Master MPU error in DMAC.

If completing all processing in NMI handler, it is possible to clear the error response detection interrupt request (DMA_TRANSERR) that occurs subsequently.

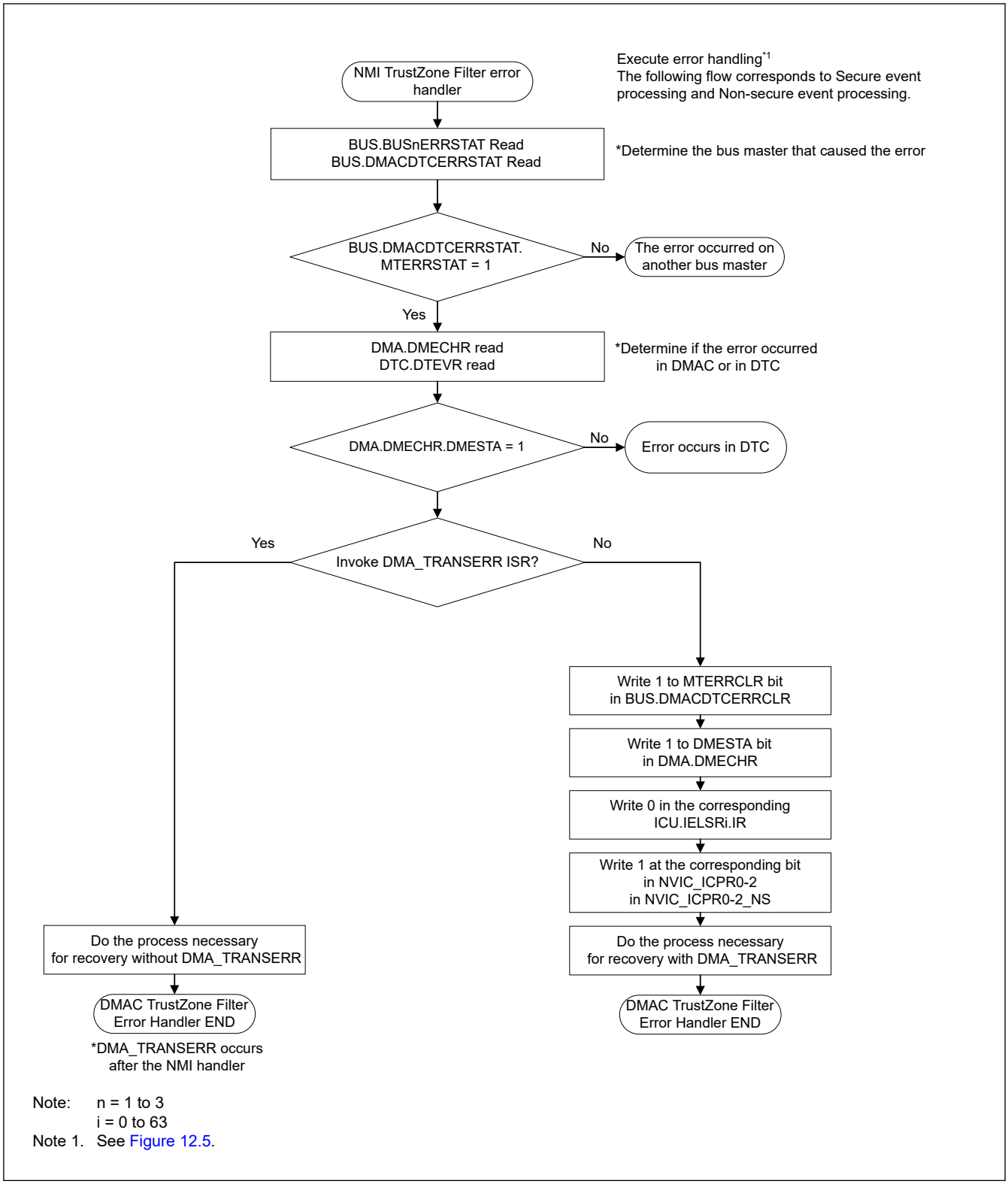

Figure 15.24 Processing in NMI handler by Master TrustZone Filter error

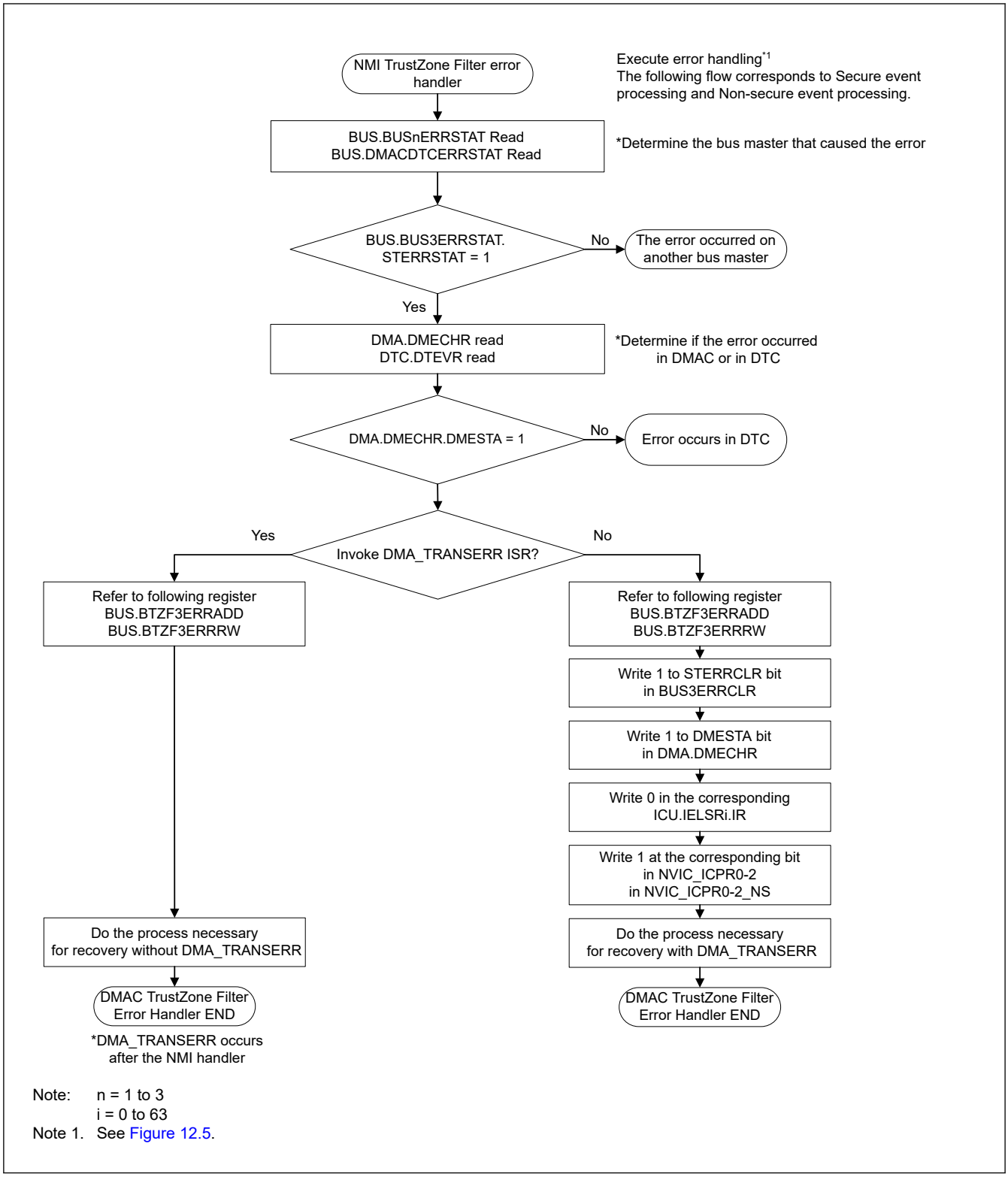

Figure 15.25 Processing in NMI handler by Slave TrustZone Filter error

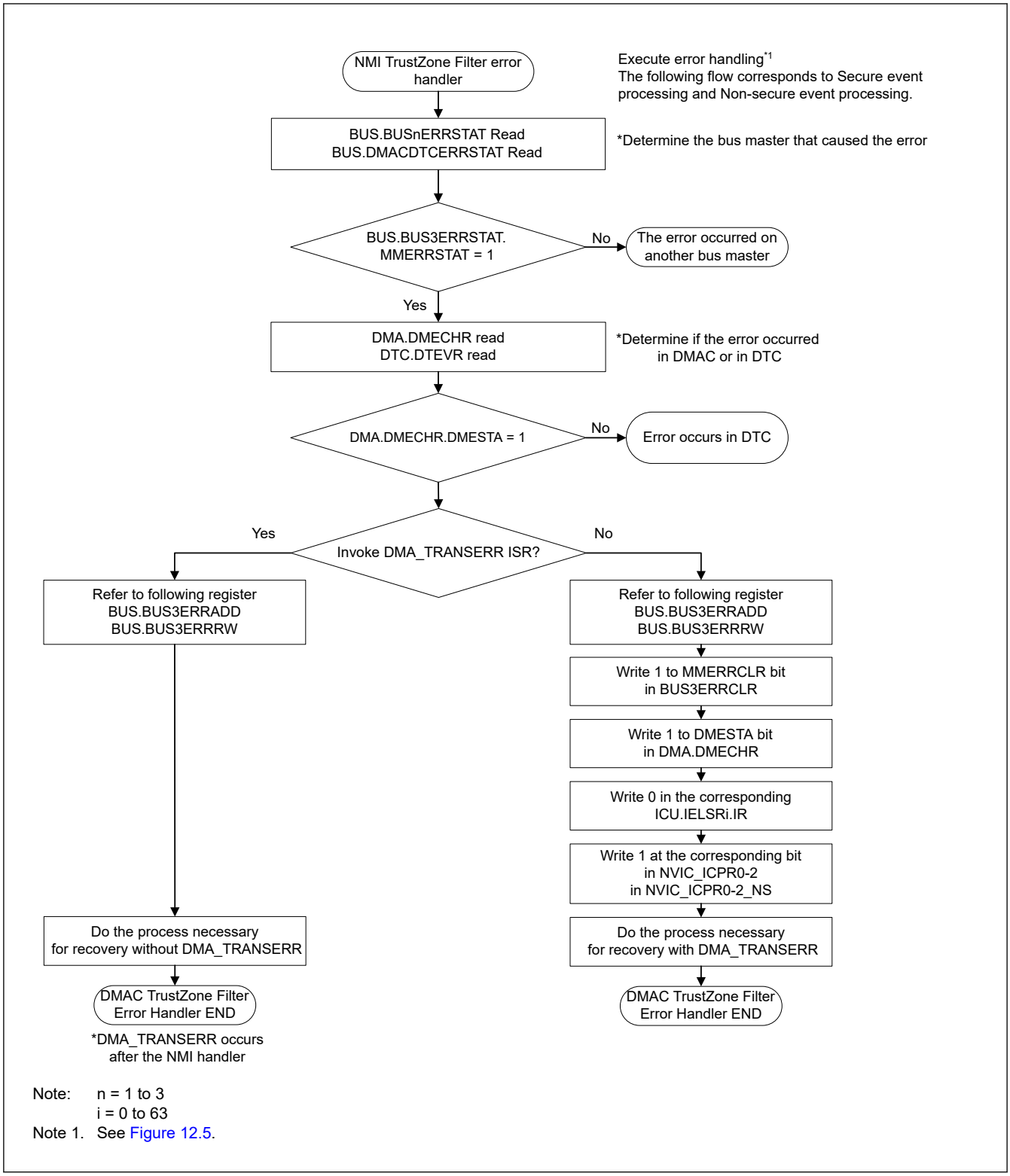

Figure 15.26 Processing in NMI handler by Master MPU error

15.5.2 Processing on Error response detection interrupt request (DMA_TRANSERR) handler

The cause of error response detection interrupt request (DMA_TRANSERR) due to DMA transfer error is the Slave Bus Error or Illegal Access Error. Also, it occurs after the NMI handler error response detection interrupt request (DMA_TRANSERR) is not cleared by the NMI handler.

It is possible to confirm the cause of the error and the DMAC channel in which the error occurred.

Error cause confirmation procedure is shown Figure 15.27.

Figure 15.28 shows the flow for confirm the channel that caused the Master TrustZone Filter Error in DMAC

Figure 15.29 shows the flow for confirm the channel that caused the Slave TrustZone Filter Error in DMAC

Figure 15.30 shows the flow for confirm the channel and Security Attribute that caused the Master MPU Error in DMAC

Figure 15.31 shows the flow for confirm the channel and Security Attribute that caused the Slave Bus Error in DMAC

Figure 15.32 shows the flow for confirm the channel and Security Attribute that caused the Illegal Access Error in DMAC

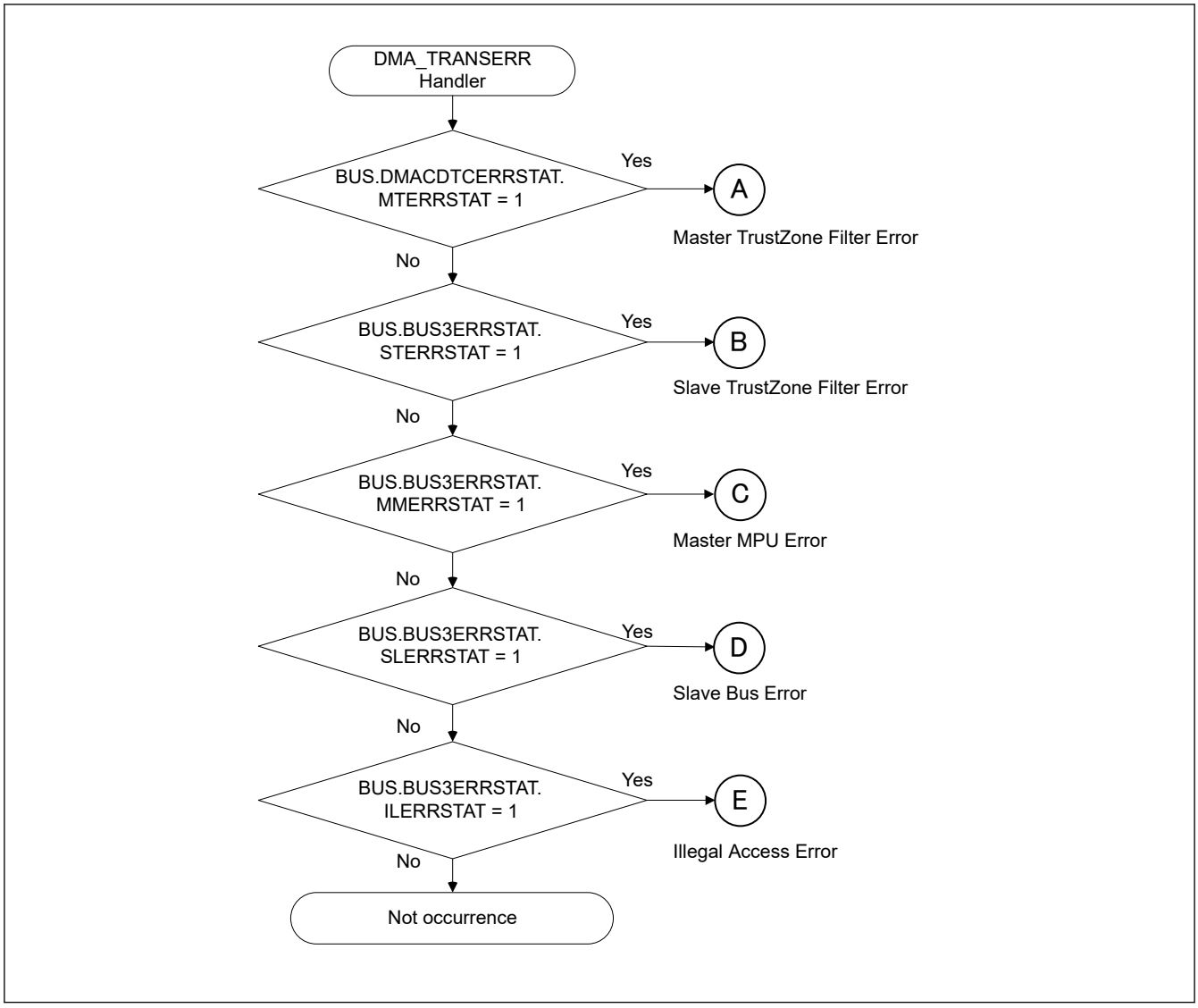

Figure 15.27 Transfer error factor judgment when the error response detection interrupt (DMA_TRANSERR) occurs

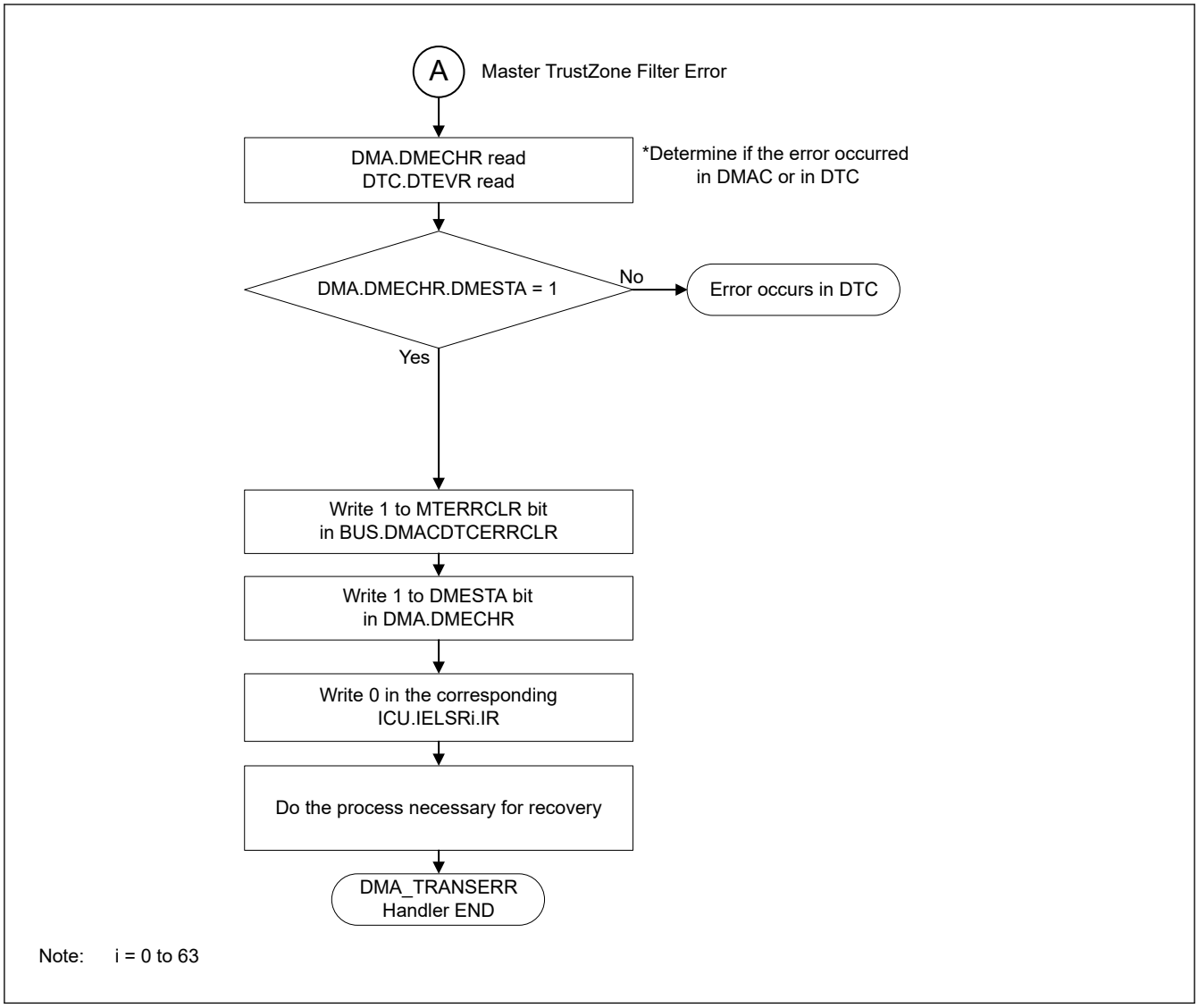

Figure 15.28 Processing in DMA_TRANSERR handler by Master TrustZone Filter Error

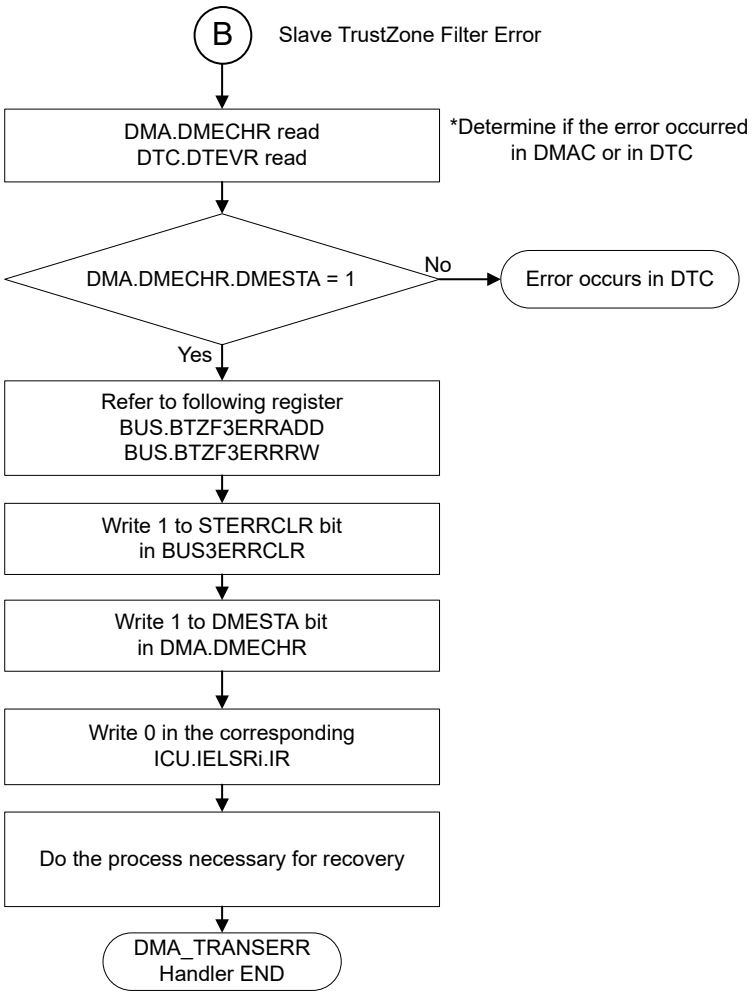

Note: i = 0 to 63

Figure 15.29 Processing in DMA_TRANSERR handler by Slave TrustZone Filter Error

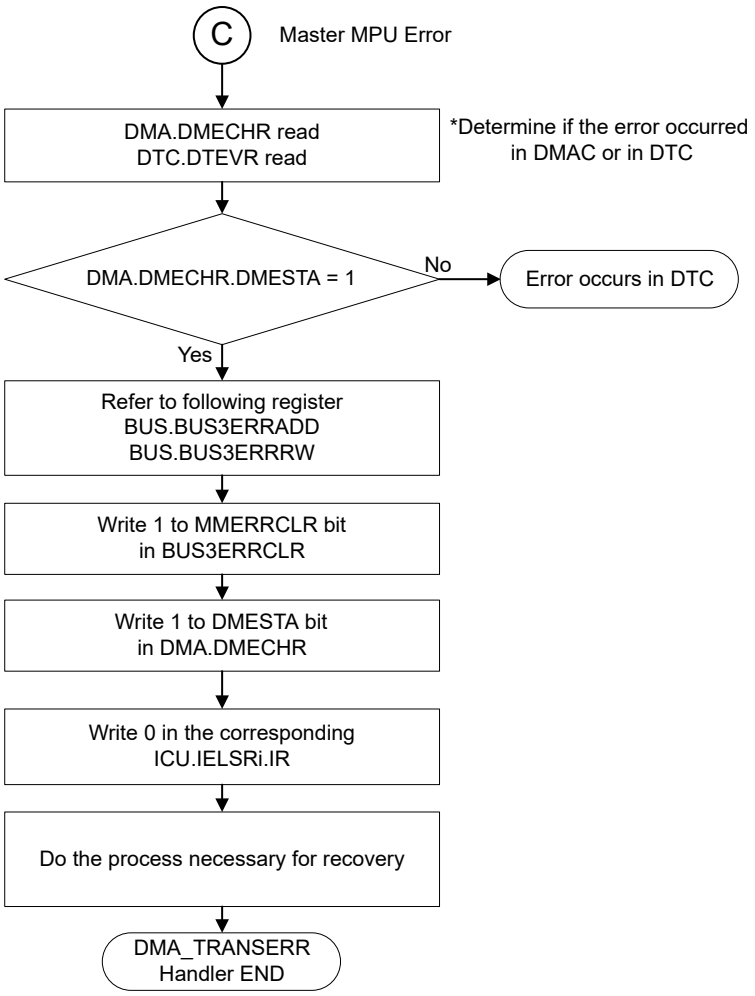

Note: i = 0 to 63

Figure 15.30 Processing in DMA_TRANSERR handler by Master MPU Error

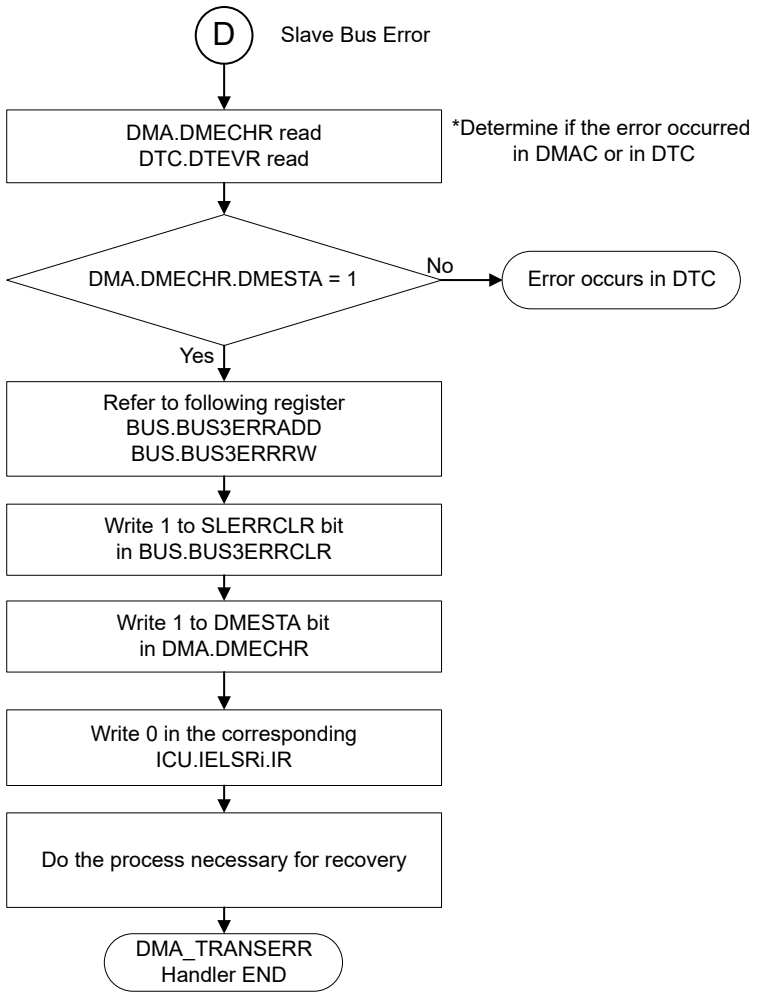

Note: i = 0 to 63

Figure 15.31 Processing in DMA_TRANSERR handler by Slave Bus Error

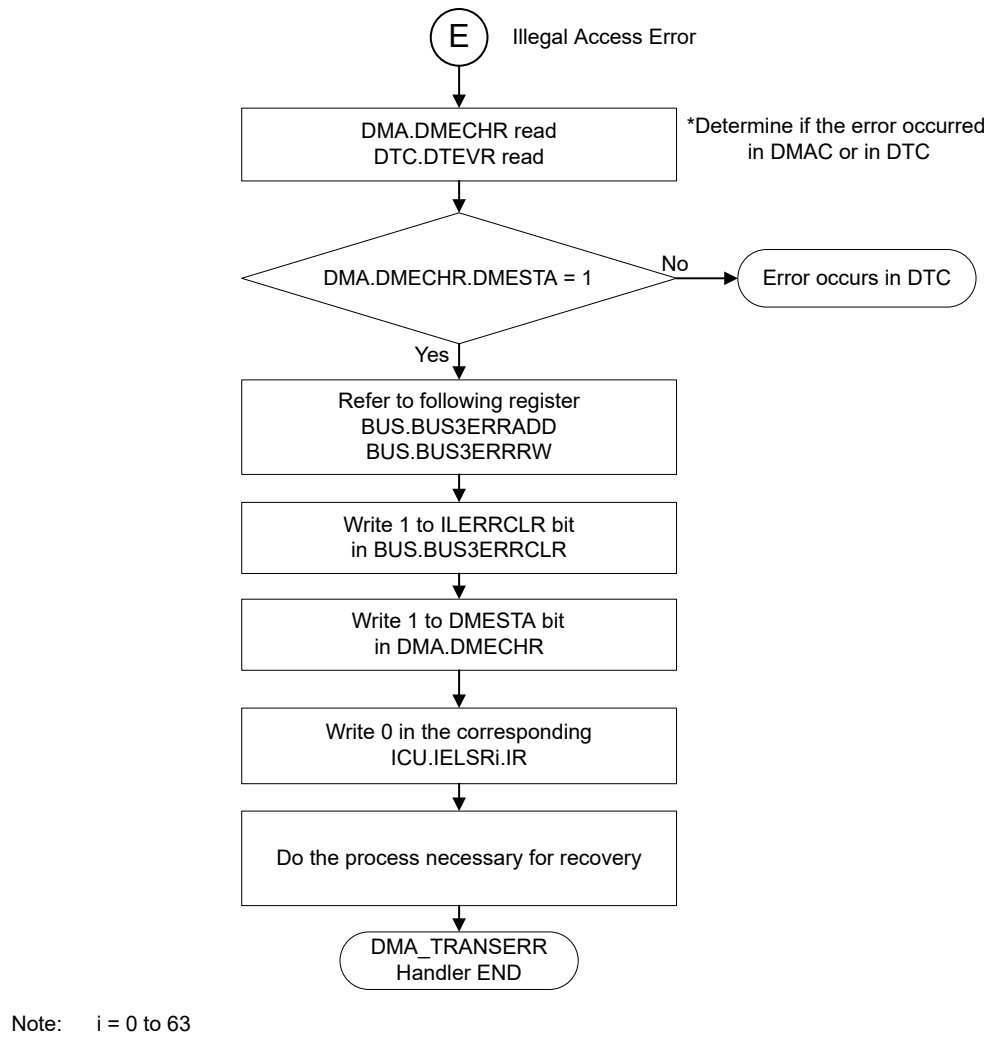

Note: i = 0 to 63

Figure 15.32 Processing in DMA_TRANSERR handler by Illegal Access Error

15.6 Interrupts

15.6.1 Transfer End Interrupt

Each DMAC channel can output an interrupt request (DMACn_INT) to the CPU or the DTC after transfer in response to one request is completed.

In repeat-block transfer mode, do not enable escape transfer end interrupt.

Table 15.21 lists the relation among the interrupt sources, the interrupt status flags, and the interrupt enable bits. Figure 15.33 shows the schematic logic diagram of interrupt outputs (DMACn (n = 0 to 7)). Figure 15.34 shows the DMAC interrupt handling routine to resume/terminate DMA transfer.

Table 15.21 Relation among interrupt sources, interrupt status flags, and interrupt enable bits (1 of 2)

Interrupt sources	Interrupt enable bits	Interrupt status flags	Request output enable bits
Transfer end	—	DMSTS.DTIF	DMINT.DTIE

Table 15.21 Relation among interrupt sources, interrupt status flags, and interrupt enable bits (2 of 2)

Interrupt sources		Interrupt enable bits	Interrupt status flags	Request output enable bits
Escape transfer end	Repeat size end	DMINT.RPTIE	DMSTS.ESIF	DMINT.ESIE
	Source address extended repeat area overflow	DMINT.SARIE		
	Destination address extended repeat area overflow	DMINT.DARIE		

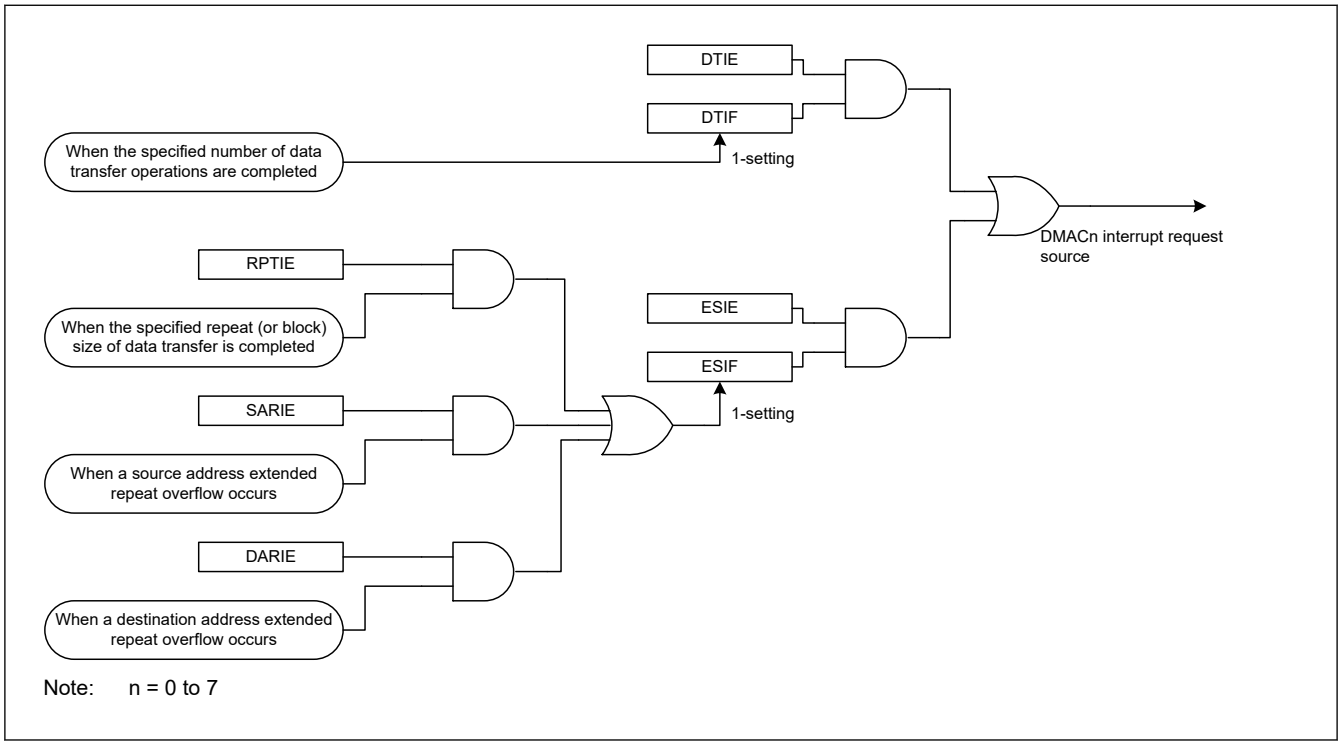

Figure 15.33 Schematic logic diagram of interrupt output source (DMACn)

Specifically, the different procedures are used for canceling an interrupt to restart DMA transfer in the following two cases:

- When terminating a DMA transfer
- When continuing a DMA transfer

15.6.1.1 When Terminating a DMA Transfer

Write 0 to the DMSTS.DTIF flag to clear a transfer end interrupt, and to the DMSTS.ESIF flag to clear a repeat size interrupt and an extended repeat area overflow interrupt. The DMACn remains in the stop state. When starting another DMA transfer after that, set the appropriate registers, and set the DMCNT.DTE bit to 1 (DMA transfer enabled).

15.6.1.2 When Continuing a DMA Transfer

Write 1 to the DMCNT.DTE bit. The DMSTS.ESIF flag is automatically cleared to 0 (interrupt source cleared), and DMA transfer is resumed.

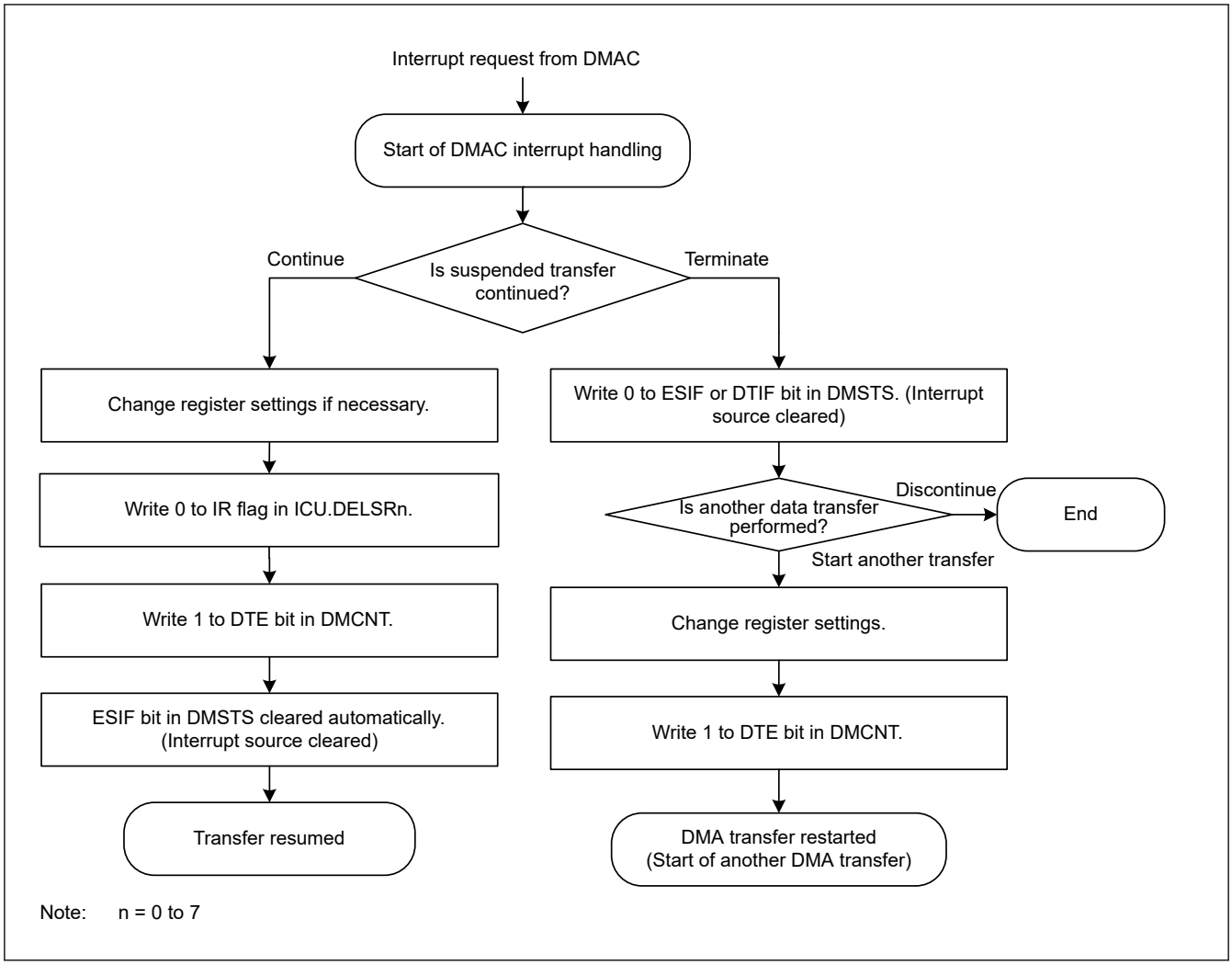

Figure 15.34 DMAC interrupt handling routine to resume/terminate DMA transfer

15.6.2 Transfer Error Interrupt

Error response detection interrupt request (DMA_TRANSERR) is generated from the DMAC/DTC when the transfer error is detected during DMAC transfer. The types of interrupts that occur when a DMAC transfer error occurs are listed in the Table 15.22. The Table 15.22 also shows error information stored when a transfer error occurs.

Table 15.22 Interrupt and error information due to DMAC transfer error cause

Transfer error factor	NMI/RESET*1 Request	Interrupt Request	Bus Error Status	Error Address Error R/W	Error Channel Information
Master TrustZone Filter (in DMAC/DTC)	ICU.NMISR.TZFST*1	DMA_TRANSERR	BUS.DMACDTCERRSTAT.MTERRSTAT*1	—	DMA.DMECHR
Slave TrustZone Filter	ICU.NMISR.TZFST*1	DMA_TRANSERR	BUS.BUS3ERRSTAT.STERRSTAT*1	BUS.BTZF3ERRADD BUS.BTZF3ERRRW	DMA.DMECHR
Master MPU	ICU.NMISR.BUSMST	DMA_TRANSERR	BUS.BUS3ERRSTAT.MMERRSTAT	BUS.BUS3ERRADD BUS.BUS3ERRRW	DMA.DMECHR
Slave Bus Error	—*2	DMA_TRANSERR	BUS.BUS3ERRSTAT.SLERRSTAT*2	BUS.BUS3ERRADD BUS.BUS3ERRRW	DMA.DMECHR
Illegal Access Error	—*2	DMA_TRANSERR	BUS.BUS3ERRSTAT.ILERRSTAT*2	BUS.BUS3ERRADD BUS.BUS3ERRRW	DMA.DMECHR

Note 1. Interrupt is generated when NMI request is selected as the operation after detection of the Master MPU error and the TrustZone Filter error. By confirming BUS.BUS3ERRSTAT and BUS.DMACDTCERRSTAT, judge whether it is the Master or the Slave.

Note 2. If the error response detection interrupt (DMA_TRANSERR) occurs and NMI of the Master MPU or NMI of the TrustZone Filter has not occurred, treat it as the Illegal address access error or the Slave Bus Error. It can also be determined by BUS.BUS3ERRSTAT and BUS.DMACDTCERRSTAT.

Note that if the bus error occurs when writing the last data of transfer, the transfer end event and the error response detection interrupt (DMA_TRANSERR) occurs.

15.7 Event Link

Each DMAC channel outputs an event link request signal (DMACn_INT) every time it completes a data transfer, or a block transfer in block transfer mode.

For details, see section 17, Event Link Controller (ELC).

If a bus error occurs when writing the last data of transfer, a transfer end event and error response detection interrupt (DMA_TRANSERR) occurs.

15.8 Low-Power Consumption Function

Before entering the module-stop state or Software Standby mode, you must first set the DMAST.DMST bit to 0 (the DMAC module suspended) and use the settings in the sections that follow.

(1) Module-stop function

Writing 1 to the MSTPCRA.MSTPA22 bit enables the module-stop function of the DMAC. If a DMA transfer is in progress when 1 is written to the MSTPA22 bit, the transition to the module-stop state proceeds after the DMA transfer ends. Access to the DMAC registers is prohibited while the MSTPA22 bit is 1. Writing 0 to the MSTPA22 bit releases the DMAC from the module-stop state.

(2) Software Standby mode

Use the settings described in section 10.7.1. Transitioning to Software Standby Mode.

If DMA transfer operations are in progress when the WFI instruction is executed, the DMA transfer completes before the transition to Software Standby mode.

(3) Notes on low power consumption function

For information on the WFI instruction and register settings, see section 10.9.6. Timing of WFI Instruction.

To perform a DMA transfer after returning from a low power mode, set the DMAST.DMST bit to 1 again. To use a request that is generated in Software Standby mode as an interrupt request to the CPU but not as a DMAC startup request, specify the CPU as the interrupt request destination, as described in section 12.4.1. Detecting Interrupts, and then execute the WFI instruction.

15.9 Usage Notes

15.9.1 Access to the Registers during DMA Transfer

Do not write to the following registers while the DMSTS.ACT flag of the same channel is set to 1 (DMAC active state) or the DMCNT.DTE bit of the same channel is set to 1 (DMA transfer enabled):

- DMSAR
- DMDAR
- DMCRA
- DMCRB
- DMTMD
- DMINT
- DMAMD
- DMOFR
- DMREQ
- DMSBS

- DMDBS
- DMSRR
- DMDRR
- ICUSARC
- DMACSAR

15.9.2 DMA Transfer to Reserved Areas

DMA transfer to the reserved areas is prohibited. If such an access is made, transfer results are not guaranteed. For details on the reserved areas, see section 4, Address Space.

15.9.3 Setting of DMAC Event Link Setting Register of the Interrupt Controller Unit (ICU.DELSRn n = 0 to 7)

The DMAC event link setting register (ICU.DELSRn) should be set while the DMA transfer enable bit (DMCNT.DTE) is cleared to 0 (DMA transfer is disabled). Moreover, the DTC activation enable register (ICU.IELSRn.DTCE (n = 0 to 63)) that corresponds to the same event number that has been set by the ICU.DELSRn register should not be set to 1. For details on the ICU.IELSRn.DTCE and ICU.DELSRn, see section 12, Interrupt Controller Unit (ICU).

15.9.4 Suspending or Restarting DMAC Activation

To suspend a DMAC activation request, write 0x00 to the DMAC Event Link select bits (ICU.DELSRn.DELS[8:0]). To restart the DMA transfer, write the event number to the ICU.DELSRn.DELS[8:0] bits following the settings shown in section 15.3.10. Activating the DMAC.

15.9.5 Precautions for Resuming DMA Transfer

A DMAC activation request might occur in the next request after a DMA transfer completes. If this happens, the DMA transfer starts and the DMAC activation request is held in the DMAC. To prevent this, stop the DMAC activation requests by setting the DELSRn.DELS[8:0] bits in the ICU to 0.

When a DMAC activation request occurs after the last round of the DMA transfer is generated, clear the DMAC activation request with either of the following approaches.

- Clear the DMAC activation request with a DMA dummy transfer.
- Set the DMCNT.DTE bit to 0 and then set the ICU.DELSRn.IR flag to 0.

See Figure 15.35.

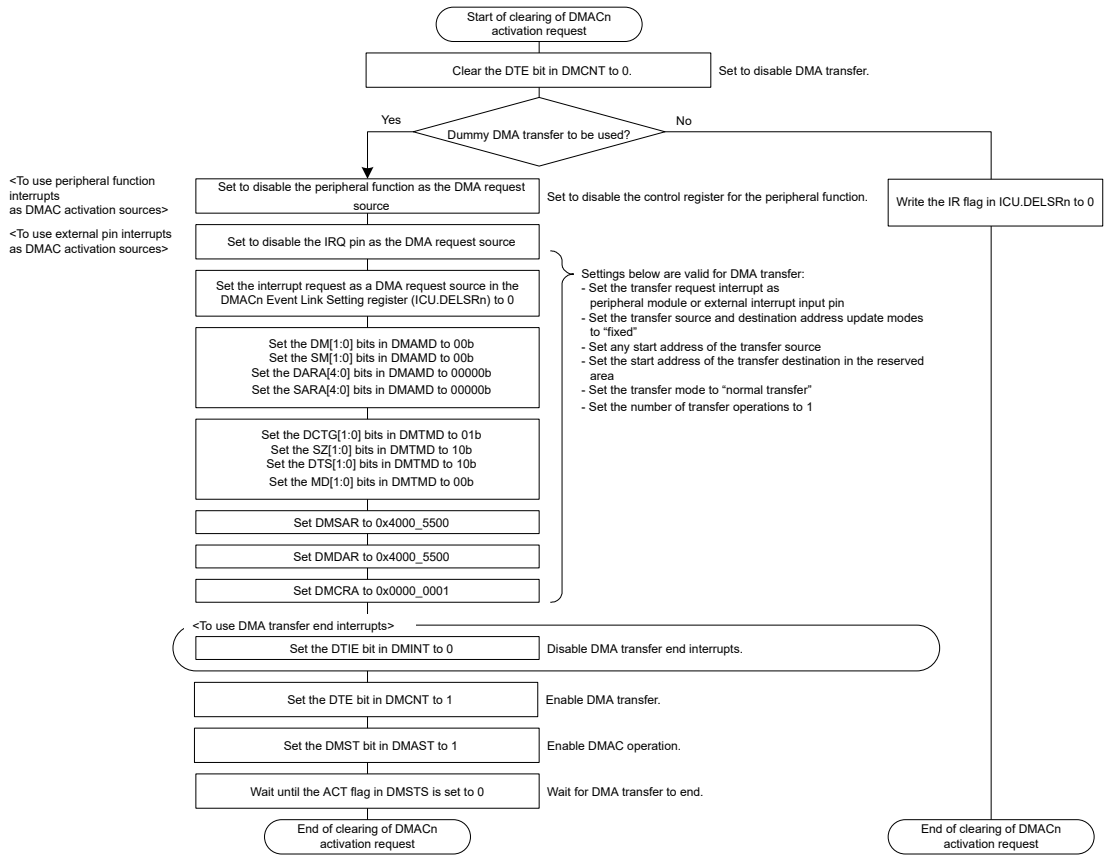

Note: n: 0 to 7

Figure 15.35 Example of register setting procedure to clear the DMAC activation interrupt

16. Data Transfer Controller (DTC)

16.1 Overview

A Data Transfer Controller (DTC) module is provided for transferring data when activated by an interrupt request.

Table 16.1 lists the DTC specifications and Figure 16.1 shows DTC block diagram.

Table 16.1 DTC specifications

Parameter	Description
Transfer modes	● Normal transfer mode A single activation leads to a single data transfer. ● Repeat transfer mode A single activation leads to a single data transfer. The transfer address returns to the start address after the number of data transfers reaches the specified repeat size. The maximum number of repeat transfers is 256 and the maximum data transfer size is 256 × 32 bits (1024 bytes) ● Block transfer mode A single activation leads to a transfer of a single block. The maximum block size is 256 × 32 bits = 1024 bytes.
Transfer channel	● Channel transfer can be associated with the interrupt source (transferred by a DTC activation request from the ICU) ● Multiple data units can be transferred on a single activation source (chain transfer) ● Chain transfers are selectable to either execute when the counter is 0, or always execute.
Transfer space	● 4 GB area from 0x0000_0000 to 0xFFFF_FFFF, excluding reserved areas
Data transfer units	● Single data unit: 1 byte (8 bits), 1 halfword (16 bits), 1 word (32 bits) ● Single block size: 1 to 256 data units.
CPU interrupt source	● An interrupt request can be generated to the CPU on a DTC activation interrupt ● An interrupt request can be generated to the CPU after a single data transfer ● An interrupt request can be generated to the CPU after a data transfer of a specified volume.
Processing on DTC transfer error	● When the DTC transfer error occurs, it stops the transfer that caused the error ● Request to clear the register for activation request of DTC error number to ICU
Error response detection interrupt	Generated when the DTC transfer error occurs
Event link function	An event link request is generated after one data transfer (for block, after one block transfer)
Read skip	Read of transfer information can be skipped
Write-back skip	When the transfer source or destination address is specified as fixed, a write-back of transfer information can be skipped
TrustZone	TrustZone violation area of Flash and SRAM is detected in advance before access the bus.
Module-stop function	Module-stop state can be set to reduce power consumption
TrustZone Filter	Security attribution can be set for each activation source

Note: Security attribution register of DTC is described in ICU.ICUSARG, ICU.ICUSARH and ICU.ICUSARI.

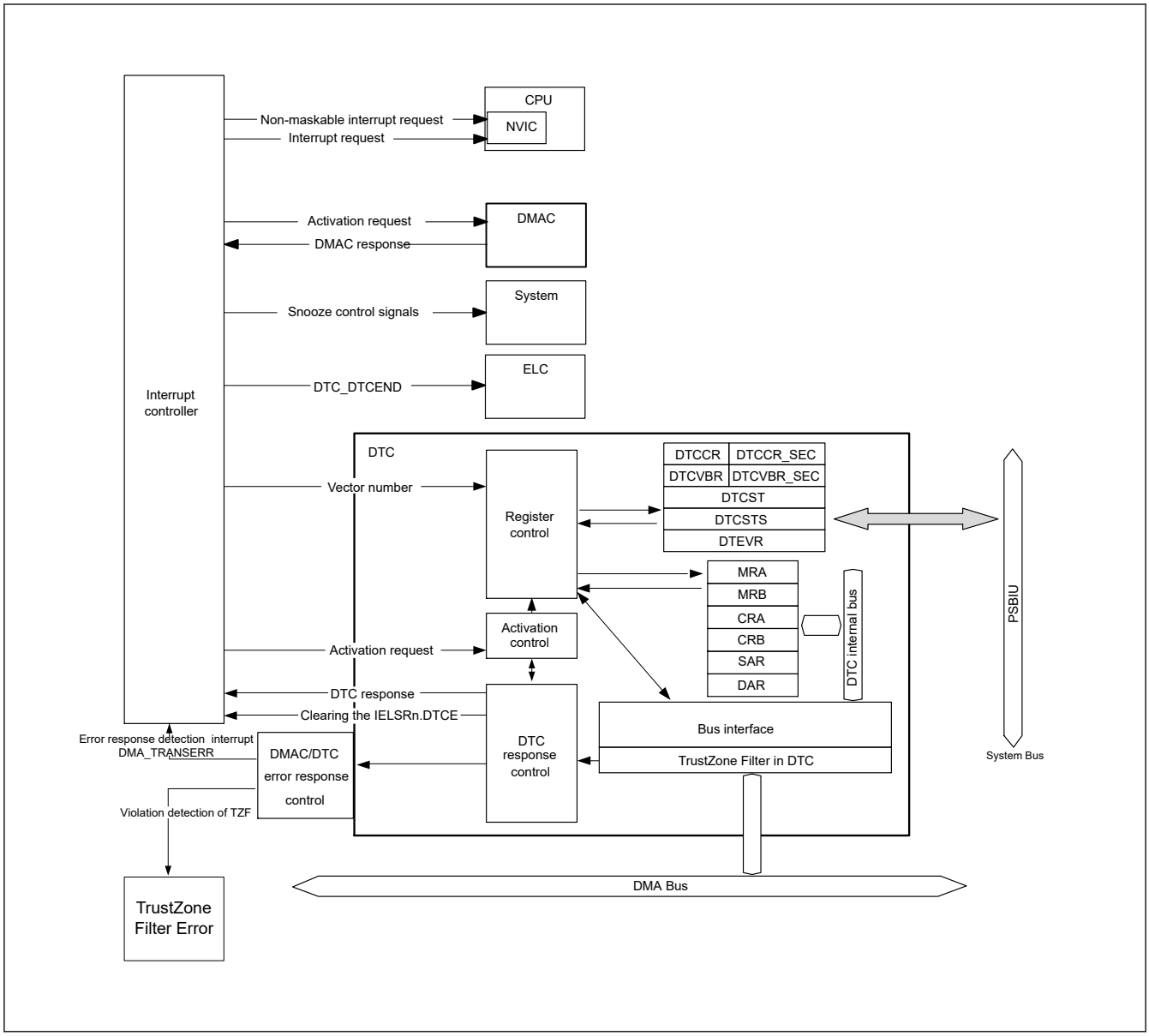

Figure 16.1 DTC block diagram

See section 12.1. Overview in section 12, Interrupt Controller Unit (ICU) for the connections between the DTC and NVIC in the CPU.

16.2 Register Descriptions

MRA, MRB, SAR, DAR, CRA, and CRB are all DTC internal registers that cannot be directly accessed from the CPU. Values to be set in these DTC internal registers are placed in the SRAM area as transfer information. When an activation request is generated, the DTC reads the transfer information from the SRAM area and sets it in its internal registers. After the data transfer ends, the internal register contents are written back to the SRAM area as transfer information.

16.2.1 DTCSAR : DTC Controller Security Attribution Register

Base address: CPSCU = 0x4000_8000

Offset address: 0x30

Bit position:	31	30	29	28	27	26	25	24	23	22	21	20	19	18	17	16
Bit field:	—	—	—	—	—	—	—	—	—	—	—	—	—	—	—	—
Value after reset:	1	1	1	1	1	1	1	1	1	1	1	1	1	1	1	1

Bit position:	15	14	13	12	11	10	9	8	7	6	5	4	3	2	1	0
Bit field:	—	—	—	—	—	—	—	—	—	—	—	—	—	—	—	DTCSTSA
Value after reset:	1	1	1	1	1	1	1	1	1	1	1	1	1	1	1	1

Bit	Symbol	Function	R/W
0	DTCSTSA	DTC Security Attribution 0: Secure. 1: Non-Secure.	R/W
31:1	—	This bit is read as 1.	R/W

Note: Only Secure access can write to this register. Both Secure access and Non-secure read access are allowed but Non-secure write access is not allowed and TrustZone access error is not generated.

Note: This register is write-protected by PRCR register.

This register only sets the DTCST security attribute.

DTCSTSA bit (DTC Security Attribution)

Security attributes of registers for DTCST.

Do not write to the DTCSTSA bit while DTC transfer is enabled or a bus master is writing to the DTC registers.

16.2.2 MRA : DTC Mode Register A

Base address: DTCVBR

Offset address: 0x03 + 0x4 × Vector number
(Inaccessible directly from the CPU. See section 16.3.1. Allocating Transfer Information and DTC Vector Table)

Bit position:	7	6	5	4	3	2	1	0
Bit field:	MD[1:0]		SZ[1:0]		SM[1:0]		—	—
Value after reset:	x	x	x	x	x	x	x	x

Bit	Symbol	Function	R/W
1:0	—	The read values are undefined. The write value should be 0.	—
3:2	SM[1:0]	Transfer Source Address Addressing Mode 0 0: Address in the SAR register is fixed (write-back to SAR is skipped.) 0 1: Address in the SAR register is fixed (write-back to SAR is skipped.) 1 0: SAR value is incremented after data transfer: +1 when SZ[1:0] = 00b +2 when SZ[1:0] = 01b +4 when SZ[1:0] = 10b 1 1: SAR value is decremented after data transfer: -1 when SZ[1:0] = 00b -2 when SZ[1:0] = 01b -4 when SZ[1:0] = 10b	—

Bit	Symbol	Function	R/W
5:4	SZ[1:0]	DTC Data Transfer Size 0 0: Byte (8-bit) transfer 0 1: Halfword (16-bit) transfer 1 0: Word (32-bit) transfer 1 1: Setting prohibited	—
7:6	MD[1:0]	DTC Transfer Mode Select 0 0: Normal transfer mode 0 1: Repeat transfer mode 1 0: Block transfer mode 1 1: Setting prohibited	—

The MRA register cannot be accessed directly from the CPU, however the CPU can access the SRAM area (transfer information (n) start address + 0x03) and DTC transfers it automatically to and from the MRA register. See section 16.3.1. Allocating Transfer Information and DTC Vector Table.

16.2.3 MRB : DTC Mode Register B

Base address: DTCVBR

Offset address: 0x02 + 0x4 × Vector number
(Inaccessible directly from the CPU. See section 16.3.1. Allocating Transfer Information and DTC Vector Table)

Bit position:	7	6	5	4	3	2	1	0
Bit field:	CHNE	CHNS	DISEL	DTS	DM[1:0]		—	—
Value after reset:	x	x	x	x	x	x	x	x

Bit	Symbol	Function	R/W
1:0	—	The read values are undefined. The write value should be 0.	—
3:2	DM[1:0]	Transfer Destination Address Addressing Mode 0 0: Address in the DAR register is fixed (write-back to DAR is skipped) 0 1: Address in the DAR register is fixed (write-back to DAR is skipped) 1 0: DAR value is incremented after data transfer: +1 when MRA.SZ[1:0] = 00b +2 when MRA.SZ[1:0] = 01b +4 when MRA.SZ[1:0] = 10b 1 1: DAR value is decremented after data transfer: -1 when MRA.SZ[1:0] = 00b -2 when MRA.SZ[1:0] = 01b -4 when MRA.SZ[1:0] = 10b	—
4	DTS	DTC Transfer Mode Select 0: Select transfer destination as repeat or block area. 1: Select transfer source as repeat or block area.	—
5	DISEL	DTC Interrupt Select 0: Generate an interrupt request to the CPU when specified data transfer is complete. 1: Generate an interrupt request to the CPU each time DTC data transfer is performed.	—
6	CHNS	DTC Chain Transfer Select 0: Chain transfer is continuous. 1: Chain transfer occurs only when the transfer counter changes from 1 to 0 or 1 to CRAH.	—
7	CHNE	DTC Chain Transfer Enable 0: Chain transfer is disabled. 1: Chain transfer is enabled.	—

The MRB register cannot be accessed directly from the CPU, however the CPU can access the SRAM area (transfer information (n) start address + 0x02) and DTC transfers it automatically to and from the MRB register. See section 16.3.1. Allocating Transfer Information and DTC Vector Table.

DM[1:0] bits (Transfer Destination Address Addressing Mode)

The DM[1:0] bits are to fix the address of the DAR register or specify increment / decrement of the DAR register after transfer.

DTS bit (DTC Transfer Mode Select)

The DTS bit specifies whether the transfer source or destination is the repeat or block area in repeat or block transfer mode.

DISEL bit (DTC Interrupt Select)

The DISEL bit specifies the condition for generating an interrupt request to the CPU.

CHNS bit (DTC Chain Transfer Select)

The CHNS bit selects the chain transfer condition. When CHNE is 0, the CHNS setting is ignored. For details on the conditions for chain transfer, see Table 16.3.

When the next transfer is chain transfer, completion of the specified number of transfers is not determined, the activation source flag is not cleared, and an interrupt request to the CPU is not generated.

CHNE bit (DTC Chain Transfer Enable)

The CHNE bit enables chain transfer. The chain transfer condition is selected by the CHNS bit. For details on chain transfer, see section 16.4.6. Chain Transfer.

16.2.4 SAR : DTC Transfer Source Register

Base address: DTCVBR

Offset address: 0x04 + 0x4 × Vector number
(Inaccessible directly from the CPU. See section 16.3.1. Allocating Transfer Information and DTC Vector Table)

Bit position:	31																															0
Bit field:																																
Value after reset:	x	x	x	x	x	x	x	x	x	x	x	x	x	x	x	x	x	x	x	x	x	x	x	x	x	x	x	x	x	x	x	x

The SAR sets the transfer source start address and cannot be accessed directly from the CPU. However, the CPU can access the SRAM area (transfer information (n) start address + 0x04) and DTC transfers it automatically to and from the SAR register. See section 16.3.1. Allocating Transfer Information and DTC Vector Table.

Misalignment is prohibited for DTC transfers. Bit[0] must be 0 when MRA.SZ[1:0] = 01b, and bit[1] and bit[0] must be 0 when MRA.SZ[1:0] = 10b.

16.2.5 DAR : DTC Transfer Destination Register

Base address: DTCVBR

Offset address: 0x08 + 0x4 × Vector number
(Inaccessible directly from the CPU. See section 16.3.1. Allocating Transfer Information and DTC Vector Table)

Bit position:	31																															0
Bit field:																																
Value after reset:	x	x	x	x	x	x	x	x	x	x	x	x	x	x	x	x	x	x	x	x	x	x	x	x	x	x	x	x	x	x	x	x

The DAR sets the transfer destination start address and cannot be accessed directly from the CPU. However, the CPU can access the SRAM area (transfer information (n) start address + 0x08) and DTC transfers it automatically to and from the DAR register. See section 16.3.1. Allocating Transfer Information and DTC Vector Table.

Misalignment is prohibited for DTC transfers. Bit[0] must be 0 when MRA.SZ[1:0] = 01b, and bit[1] and bit[0] must be 0 when MRA.SZ[1:0] = 10b.

16.2.6 CRA : DTC Transfer Count Register A

Base address: DTCVBR

Offset address: 0x0E + 0x4 × Vector number
(Inaccessible directly from the CPU. See section 16.3.1. Allocating Transfer Information and DTC Vector Table)

Bit position:	15	14	13	12	11	10	9	8	7	6	5	4	3	2	1	0
Bit field:																
Value after reset:	x	x	x	x	x	x	x	x	x	x	x	x	x	x	x	x

Bit	Symbol	Function	R/W
7:0	CRAL	Transfer Counter A Lower Register Specify the transfer count.	—
15:8	CRAH	Transfer Counter A Upper Register Specify the transfer count.	—

Note: The function depends on the transfer mode.
Note: Set CRAH and CRAL to the same value in repeat transfer mode and block transfer mode.

The CRA register consists of 16 bits. CRAL is the lower 8 bits and CRAH is the upper 8 bits. CRA is used in normal mode.

CRAL and CRAH are used in repeat transfer mode and block transfer mode.

The CRA register cannot be accessed directly from the CPU. However, the CPU can access the SRAM area (transfer information (n) start address + 0x0E) and DTC transfers it automatically to and from the CRA register. See section 16.3.1. Allocating Transfer Information and DTC Vector Table.

(1) Normal transfer mode (MRA.MD[1:0] = 00b)

In normal transfer mode, CRA functions as a 16-bit transfer counter. The transfer count is 1, 65535, and 65536 when the set value is 0x0001, 0xFFFF, and 0x0000, respectively. The CRA value is decremented (-1) on each data transfer.

(2) Repeat transfer mode (MRA.MD[1:0] = 01b)

In repeat transfer mode, the CRAH register holds the transfer count and the CRAL register functions as an 8-bit transfer counter. The transfer count is 1, 255, and 256 when the set value is 0x01, 0xFF, and 0x00, respectively. The CRAL value is decremented (-1) on each data transfer. When it reaches 0x00, the CRAH value is transferred to CRAL.

(3) Block transfer mode (MRA.MD[1:0] = 10b)

In block transfer mode, the CRAH register holds the block size and the CRAL register functions as an 8-bit block size counter. The transfer count is 1, 255, and 256 when the set value is 0x01, 0xFF, and 0x00, respectively. The CRAL value is decremented (-1) on each data transfer. When it reaches 0x00, the CRAH value is transferred to CRAL.

16.2.7 CRB : DTC Transfer Count Register B

Base address: DTCVBR

Offset address: 0x0C + 0x4 × Vector number
(Inaccessible directly from the CPU. See section 16.3.1. Allocating Transfer Information and DTC Vector Table)

Bit position:	15	14	13	12	11	10	9	8	7	6	5	4	3	2	1	0
Bit field:																
Value after reset:	x	x	x	x	x	x	x	x	x	x	x	x	x	x	x	x

The CRB sets the block transfer count for block transfer mode. The transfer count is 1, 65535, and 65536 when the set value is 0x0001, 0xFFFF, and 0x0000, respectively. The CRB value is decremented (-1) when the final data of a single block size is transferred. When normal transfer mode or repeat transfer mode is selected, this register is not used, and the set value is ignored.

The CRB cannot be accessed directly from the CPU. However, the CPU can access the SRAM area (transfer information (n) start address + 0x0C) and DTC transfers it automatically to and from the CRB register. See section 16.3.1. Allocating Transfer Information and DTC Vector Table.

16.2.8 DTCCR : DTC Control Register

Base address: DTC = 0x4000_5400

Offset address: 0x00

Bit position:	7	6	5	4	3	2	1	0
Bit field:	—	—	—	RRS	—	—	—	—
Value after reset:	0	0	0	0	1	0	0	0

Bit	Symbol	Function	R/W
2:0	—	These bits are read as 0. The write value should be 0.	R/W
3	—	This bit is read as 1. The write value should be 1.	R/W
4	RRS	DTC Transfer Information Read Skip Enable 0: Transfer information read is not skipped 1: Transfer information read is skipped when vector numbers match	R/W
7:5	—	These bits are read as 0. The write value should be 0.	R/W

RRS bit (DTC Transfer Information Read Skip Enable)

The RRS bit enables skipping of transfer information reads when vector numbers match. The DTC vector number is compared with the vector number in the previous activation process. When these vector numbers match and the RRS bit is set to 1, DTC data transfer is performed without reading the transfer information. However, when the previous transfer is a chain transfer, the transfer information is read regardless of the RRS bit.

When the transfer counter (CRA register) becomes 0 during the previous normal transfer and when the transfer counter (CRB register) becomes 0 during the previous block transfer, the transfer information is read regardless of the RRS bit value.

16.2.9 DTCCR_SEC : DTC Control Register for Secure Region

Base address: DTC = 0x4000_5400

Offset address: 0x10

Bit position:	7	6	5	4	3	2	1	0
Bit field:	—	—	—	RRS	—	—	—	—
Value after reset:	0	0	0	0	1	0	0	0

Bit	Symbol	Function	R/W
2:0	—	These bits are read as 0. The write value should be 0.	R/W
3	—	This bit is read as 1. The write value should be 1.	R/W
4	RRS	DTC Transfer Information Read Skip Enable for Secure 0: Transfer information read is not skipped. 1: Transfer information read is skipped when vector numbers match.	R/W
7:5	—	These bits are read as 0. The write value should be 0.	R/W

Note: Secure access is allowed. Non-secure access is read-only.

RRS bit (DTC Transfer Information Read Skip Enable for Secure)

The RRS bit enables skipping of transfer information reads when vector numbers match. The DTC vector number is compared with the vector number in the previous activation process. When these vector numbers match and the RRS bit is

set to 1, DTC data transfer is performed without reading the transfer information. However, when the previous transfer is a chain transfer, the transfer information is read regardless of the RRS bit.

When the transfer counter (CRA register) becomes 0 during the previous normal transfer and when the transfer counter (CRB register) becomes 0 during the previous block transfer, the transfer information is read regardless of the RRS bit value.

16.2.10 DTCVBR : DTC Vector Base Register

Base address: DTC = 0x4000_5400

Offset address: 0x04

Bit position:	31																															0
Bit field:																																
Value after reset:	0	0	0	0	0	0	0	0	0	0	0	0	0	0	0	0	0	0	0	0	0	0	0	0	0	0	0	0	0	0	0	0

Bit	Symbol	Function	R/W
31:0	n/a	DTC Vector Base Address Set the DTC vector base address. The lower 10 bits should be 0.	R/W

The DTCVBR sets the base address for calculating the DTC vector table address, which can be set in the range of 0x0000_0000 to 0xFFFF_FFFF (4 GB) in 1-KB units.

16.2.11 DTCVBR_SEC : DTC Vector Base Register for Secure Region

Base address: DTC = 0x4000_5400

Offset address: 0x14

Bit position:	31																															0
Bit field:																																
Value after reset:	0	0	0	0	0	0	0	0	0	0	0	0	0	0	0	0	0	0	0	0	0	0	0	0	0	0	0	0	0	0	0	0

Bit	Symbol	Function	R/W
31:0	n/a	DTC Vector Base Address for Secure Region Set DTC Vector Base Address for Secure region. The lower 10 bits should be 0.	R/W

Note: Secure access is allowed. Non-secure access is read-only.

The DTCVBR_SEC sets the base address for calculating the DTC vector table address, which can be set in the range of 0x0000_0000 to 0xFFFF_FFFF (4 GB) in 1-KB units.

16.2.12 DTCST : DTC Module Start Register

Base address: DTC = 0x4000_5400

Offset address: 0x0C

Bit position:	7	6	5	4	3	2	1	0
Bit field:	—	—	—	—	—	—	—	DTCST
Value after reset:	0	0	0	0	0	0	0	0

Bit	Symbol	Function	R/W
0	DTCST	DTC Module Start 0: DTC module stopped. 1: DTC module started.	R/W
7:1	—	These bits are read as 0. The write value should be 0.	R/W

Note: If the security attribution is configured as Secure:
- Secure access and Non-secure read access are allowed
- Non-secure write access is ignored, and TrustZone access error is not generated.

If the security attribution is configured as Non-secure:
- Secure and Non-secure access are allowed.

DTCST bit (DTC Module Start)

Set the DTCST bit to 1 to enable the DTC to accept transfer requests. When this bit is set to 0, transfer requests are no longer accepted. If this bit is set to 0 during a data transfer, the accepted transfer request is active until processing completes.

DTCST must be set to 0 before transitioning to one of the following state or mode:

- Module-stop state
- Software Standby mode without Snooze mode transition

For details on these transitions, see section 16.10. Low Power Consumption Function and section 10, Low Power Modes.

16.2.13 DTCSTS : DTC Status Register

Base address: DTC = 0x4000_5400

Offset address: 0x0E

Bit position:	15	14	13	12	11	10	9	8	7	6	5	4	3	2	1	0
Bit field:	ACT	—	—	—	—	—	—	—	VECN[7:0]							
Value after reset:	0	0	0	0	0	0	0	0	0	0	0	0	0	0	0	0

Bit	Symbol	Function	R/W
7:0	VECN[7:0]	DTC-Activating Vector Number Monitoring These bits indicate the vector number for the activation source when a DTC transfer is in progress. The value is only valid if a DTC transfer is in progress (ACT flag is 1).	R
14:8	—	These bits are read as 0.	R
15	ACT	DTC Active Flag 0: DTC transfer operation is not in progress. 1: DTC transfer operation is in progress.	R

VECN[7:0] bits (DTC-Activating Vector Number Monitoring)

While transfer by the DTC is in progress, the VECN[7:0] bits indicate the vector number associated with the activation source for the transfer. The value read from the VECN[7:0] bits is valid if the ACT flag is 1, indicating a DTC transfer in progress, and invalid if the ACT flag is 0, indicating no DTC transfer is in progress.

ACT flag (DTC Active Flag)

The ACT flag indicates the state of the DTC transfer operation.

[Setting condition]

- When the DTC is activated by a transfer request.

[Clearing condition]

- When transfer by the DTC, in response to a transfer request, is complete.

16.2.14 DTEVR : DTC Error Vector Register

Base address: DTC = 0x4000_5400

Offset address: 0x20

Bit position:	31	30	29	28	27	26	25	24	23	22	21	20	19	18	17	16
Bit field:	—	—	—	—	—	—	—	—	—	—	—	—	—	—	—	DTESTA
Value after reset:	0	0	0	0	0	0	0	0	0	0	0	0	0	0	0	0

Bit position:	15	14	13	12	11	10	9	8	7	6	5	4	3	2	1	0
Bit field:	—	—	—	—	—	—	—	DTEVSAM	DTEV[7:0]							
Value after reset:	0	0	0	0	0	0	0	0	0	0	0	0	0	0	0	0

Bit	Symbol	Function	R/W
7:0	DTEV[7:0]	DTC Error Vector Number These bits represent error vector of the DTC.	R
8	DTEVSAM	DTC Error Vector Number SA Monitor Indicates the SA of vector number causing the error. 0: Secure vector number 1: Non-Secure vector number	R
15:9	—	These bits are read as 0. The write value should be 0.	R
16	DTESTA	DTC Error Status Flag 0: No DTC transfer error occurred 1: DTC transfer error occurred	R/W
31:17	—	These bits are read as 0. The write value should be 0.	R

Note: Writing to DTESTA depend on the value of DTEVSAM

DTEV[7:0] bits (DTC Error Vector Number)

When a transfer error due to DTC transfer occurs, the DTEV[7:0] bits store the violating DTC channel.

When reset is selected in MPU.MMPUOAD.OAD and TZF.TZFOAD.OAD, this register is also reset. Select NMI when you want to debug the program.

[Set condition]

- When the DTC transfer error occurs and DTESTA = 0.

[Clearing condition]

- When 1 is written to DTEVR.DTESTA.

DTEVSAM bit (DTC Error Vector Number SA Monitor)

When a transfer error due to DTC transfer occurs, the DTEVSAM bit indicates the SA of the violating DTC vector number.

When reset is selected in MPU.MMPUOAD.OAD and TZF.TZFOAD.OAD, this register is also reset. Select NMI when you want to debug the program.

[Set condition]

- When the DTC transfer error occurs and DTESTA = 0.

[Clearing condition].

- When 1 is written to DTEVR.DTESTA.

DTESTA bit (DTC Error Status Flag)

The DTESTA bit indicates whether or not a DTC transfer error occurred.

DTEV, DTEVSAM, DTESTA are cleared by writing 1 to DTESTA.

Writing 0 to DTESTA is ignored.

When reset is selected in MPU.MMPUOAD.OAD and TZF.TZFOAD.OAD, this register is also reset. Select NMI when you want to debug the program.

[Set condition]

- When the DTC transfer error occurs.

[Clearing condition]

- When 1 is written to DTEVR.DTESTA.

Note: When DTEVSAM = 1, it can be cleared in the Secure state and Non-secure state. DTEVSAM = 0, it cannot be cleared in the Non-secure state.

16.3 Activation Sources

The DTC is activated by an interrupt request. Setting the ICU.IELSRn.DTCE bit to 1 enables activation of the DTC by the associated interrupt. The selector output *n* number set in ICU.IELSRn is defined as the interrupt vector number, where n = 0 to 63. For an enabled interrupt, the specific DTC interrupt source associated with each interrupt vector number *n* is selected in ICU.IELSRn.IELS[8:0] where n = 0 to 63, as listed in section 12.3.2. Event Number in section 12, Interrupt Controller Unit (ICU). For activation by software, see section 17.2.2. ELSEGRn : Event Link Software Event Generation Register n (n = 0, 1).

The interrupt vector number is equivalent to the DTC vector table number. After the DTC accepted an activation request, it does not accept another activation request until the transfer for that single request is complete, regardless of the priority of the requests. When multiple activation requests are generated during a DTC transfer, the highest priority request is accepted on completion of the transfer. When multiple activation requests are generated while the DTC Module Start bit (DTCST.DTCST) is 0, the DTC accepts the highest priority request when DTCST.DTCST is subsequently set to 1. The smaller interrupt vector number has higher priority.

The DTC performs the following operations at the start of a single data transfer or for a chain transfer, after the last of the consecutive transfers:

- On completion of a specified round of data transfer, the ICU.IELSRn.DTCE bit is set to 0, and an interrupt request is sent to the CPU.
- If the MRB.DISEL bit is 1, an interrupt request is sent to the CPU on completion of a data transfer.
- For other transfers, the ICU.IELSRn.IR flag of the activation source is set to 0 at the start of the data transfer.

16.3.1 Allocating Transfer Information and DTC Vector Table

The DTC reads the start address of the transfer information associated with each activation source from the vector table and reads the transfer information starting at that address.

DTC has two vector tables, Non-secure side or Secure side. Because the interrupt vector number that serves as a trigger for DTC is divided into Non-secure or Secure. Place the vector table of the interrupt vector number of SA = 1 in DTCVBR which is the Non-secure side. Place the vector table of interrupt number SA = 0 in DTCVBR_SEC which is the Secure side.

The vector table must be located so that the lower 10 bits of the base address (start address) are 0. Use the DTC Vector Base Register (DTCVBR) to set the base address of the DTC vector table. Transfer information is allocated in the SRAM area. In the SRAM area, the start address of the transfer information *n* with vector number *n* must be 4n added to the base address in the vector table.

Figure 16.2 shows the relationship between the DTC vector table and transfer information. Figure 16.3 shows the allocation of transfer information in the SRAM area.

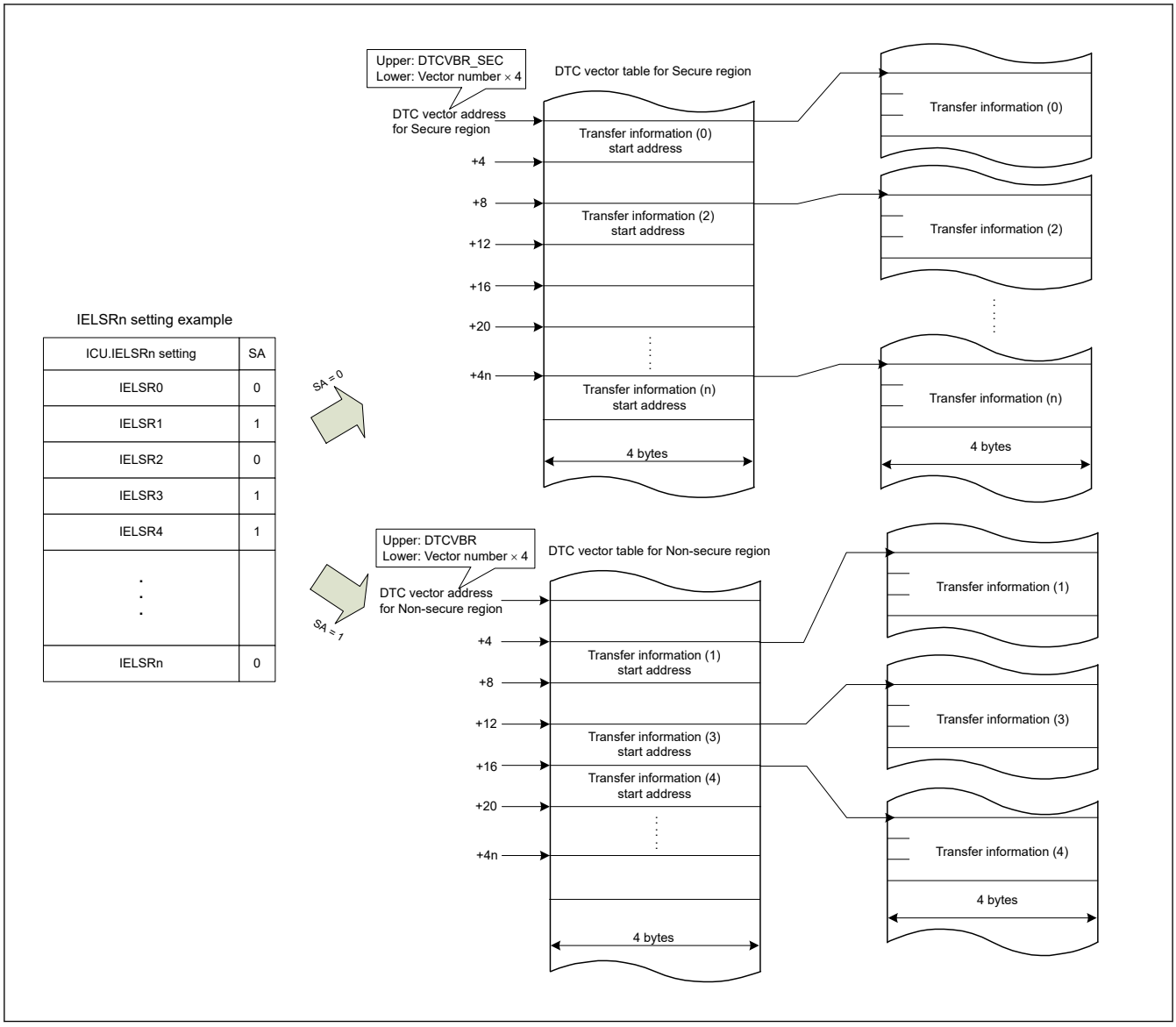

Figure 16.2 DTC vector table and transfer information

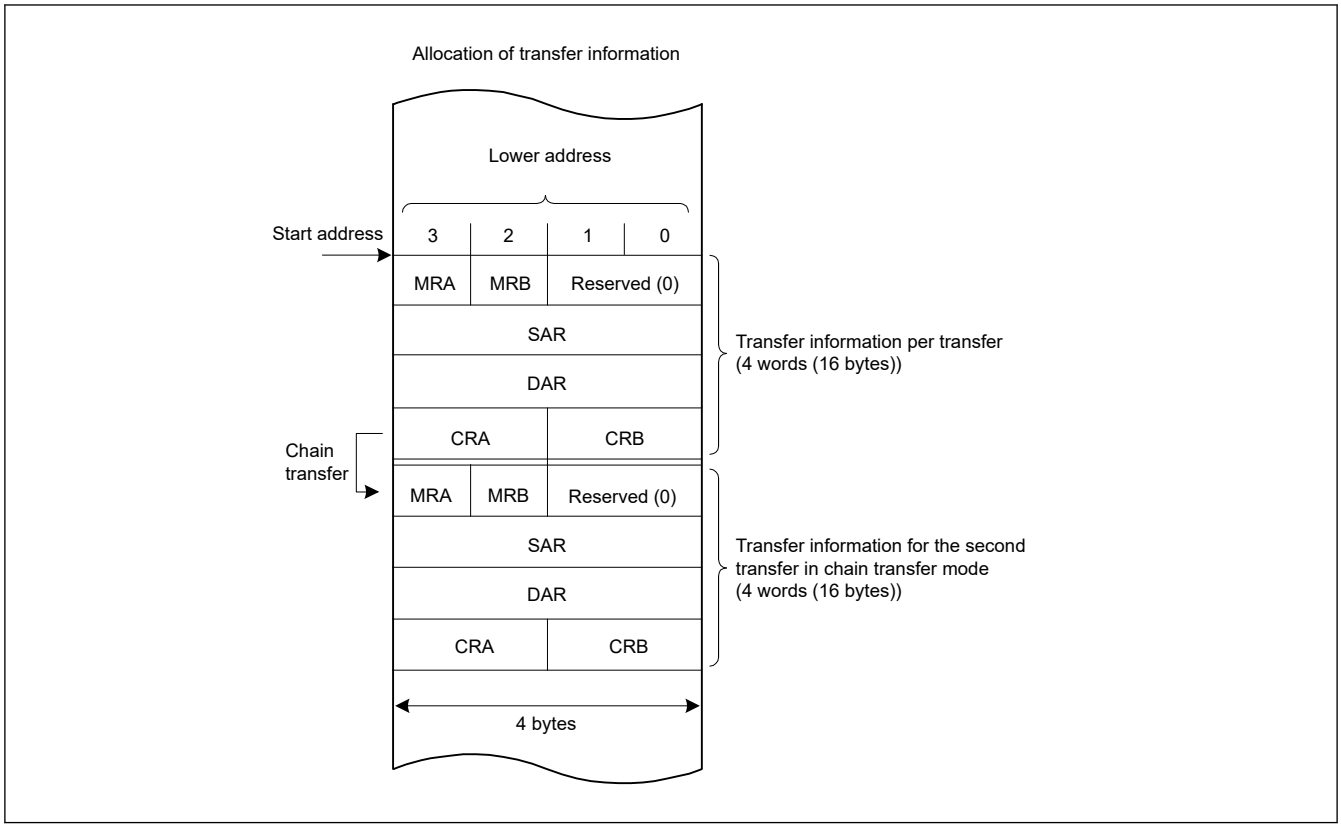

Figure 16.3 Allocation of transfer information in the SRAM area

16.4 Operation

The DTC transfers data according to the transfer information. Storage of the transfer information in the SRAM area is required before a DTC operation. When the DTC is activated, it reads the DTC vector associated with the vector number. The DTC reads the transfer information from the transfer information store address referenced by the DTC vector and transfers the data. After the data transfer, the DTC writes back the transfer information. Storing the transfer information in the SRAM area allows data transfer of any number of channels.

The transfer modes include:

- Normal transfer mode
- Repeat transfer mode
- Block transfer mode.

The DTC specifies a transfer source address in the SAR register and a transfer destination address in the DAR register. The values of these registers are incremented, decremented, or address-fixed independently after the data transfer.

Table 16.2 describes the DTC transfer modes.

Table 16.2 DTC transfer modes

Transfer mode	Data size transferred on single transfer request	Increment or decrement of memory address	Settable transfer count
Normal transfer mode	1 byte (8 bit), 1 halfword (16 bit), 1 word (32 bit)	Incremented or decremented by 1, 2, or 4 or address-fixed	1 to 65536
Repeat transfer mode*1	1 byte (8 bit), 1 halfword (16 bit), 1 word (32 bit)	Incremented or decremented by 1, 2, or 4 or address-fixed	1 to 256*3
Block transfer mode*2	Block size specified in CRAH (1 to 256 bytes, 1 to 256 halfwords (2 to 512 bytes), or 1 to 256 words (4 to 1024 bytes))	Incremented or decremented by 1, 2, or 4 or address-fixed	1 to 65536

Note 1. Set the transfer source or transfer destination as the repeat area.
Note 2. Set the transfer source or transfer destination as the block area.
Note 3. After a data transfer of the specified count, the initial state is restored and operation restarts.

Setting the MRB.CHNE bit to 1 allows multiple transfers or chain transfer on a single activation source. It also enables a chain transfer when the specified data transfer is complete.

Figure 16.4 shows the operation flow of the DTC. Table 16.3 lists the chain transfer conditions. The combination of control information for the second and subsequent transfers are omitted in this table.

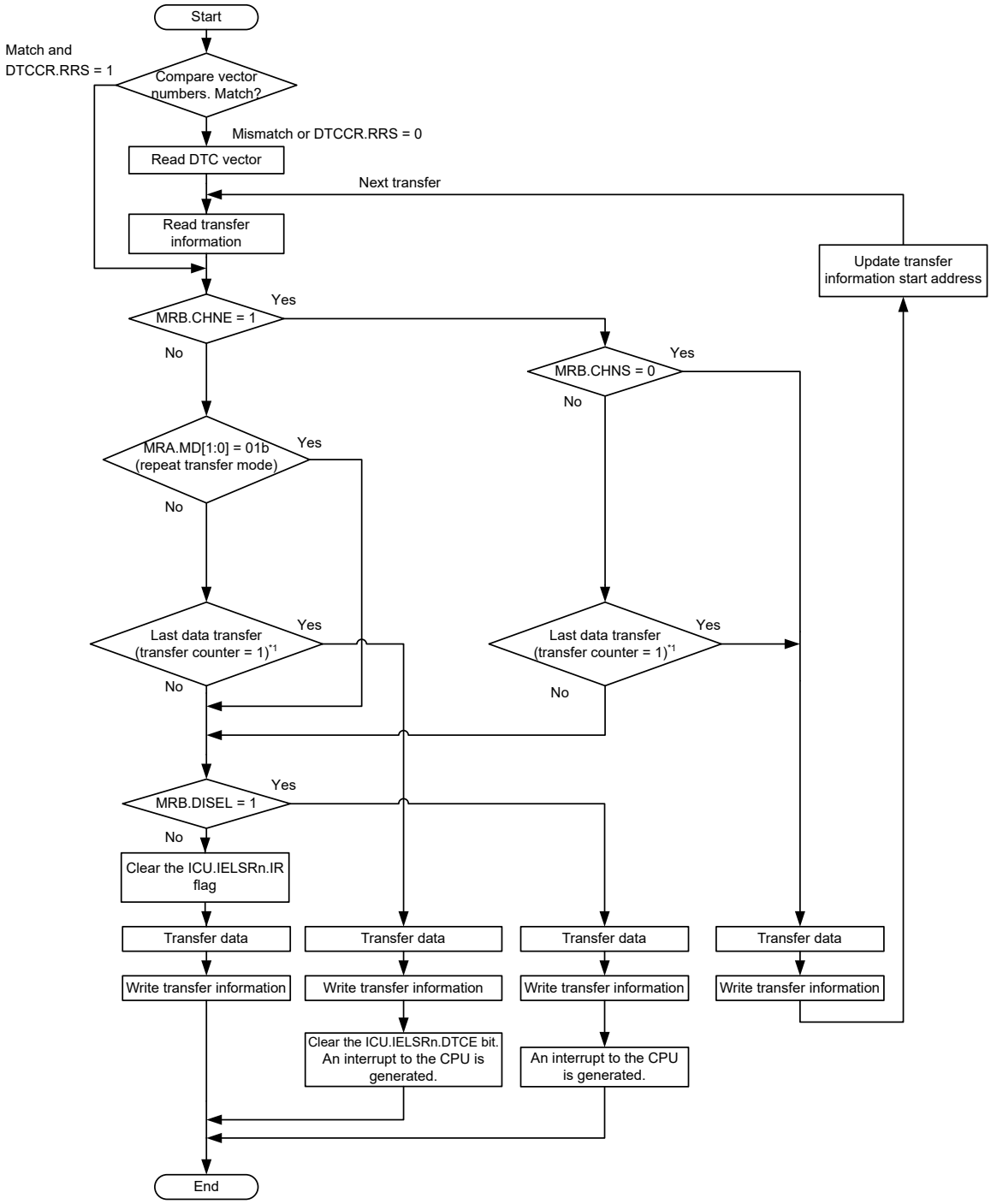

Note 1. Counter value before starting data transfer.

Figure 16.4 DTC operation flow

Table 16.3 Chain transfer conditions

First transfer				Second transfer*3				
CHNE bit	CHNS bit	DISEL bit	Transfer counter*1 *2	CHNE bit	CHNS bit	DISEL bit	Transfer counter*1 *2	DTC transfer
0	—	0	Other than (1 → 0)	—	—	—	—	Ends after the first transfer
0	—	0	(1 → 0)	—	—	—	—	Ends after the first transfer with an interrupt request to the CPU
0	—	1	—	—	—	—	—	
1	0	—	—	0	—	0	Other than (1 → 0)	Ends after the second transfer
				0	—	0	(1 → 0)	Ends after the second transfer with an interrupt request to the CPU
				0	—	1	—	
1	1	0	Other than (1 → *)	—	—	—	—	Ends after the first transfer
1	1	—	(1 → *)	0	—	0	Other than (1 → 0)	Ends after the second transfer
				0	—	0	(1 → 0)	Ends after the second transfer with an interrupt request to the CPU
				0	—	1	—	
1	1	1	Other than (1 → *)	—	—	—	—	Ends after the first transfer with an interrupt request to the CPU

Note 1. The transfer counter used depends on the transfer modes as follows:
Normal transfer mode — CRA register
Repeat transfer mode — CRAL register
Block transfer mode — CRB register

Note 2. On completion of a data transfer, the counters operate as follows:
1 → 0 in normal and block transfer modes
1 → CRAH in repeat transfer mode
(1 → *) in the table indicates both of these two operations, depending on the mode.

Note 3. Chain transfer can be selected for the second or subsequent transfers. The conditions for the combination of the second transfer and CHNE = 1 is omitted.

16.4.1 Transfer Information Read Skip Function

Reading of vector addresses and transfer information can be skipped by setting the DTCCR.RRS bit. When a DTC activation request is generated, the current DTC vector number is compared with the DTC vector number in the previous activation process. When these vector numbers match and the RRS bit is set to 1, the DTC data transfer is performed without reading the vector address and transfer information. However, when the previous transfer is a chain transfer, the vector address and transfer information are read. Additionally, when the transfer counter (CRA register) becomes 0 during the previous normal transfer, and when the transfer counter (CRB register) becomes 0 during the previous block transfer, transfer information is read regardless of the RRS bit. Figure 16.12 shows an example when reading the transfer information is skipped.

To update the vector table and transfer information, set the RRS bit to 0, update the vector table and transfer information, then set the RRS bit to 1. The stored vector number is discarded by setting the RRS bit to 0. The updated DTC vector table and transfer information are read in the next activation process.

16.4.2 Transfer Information Write-Back Skip Function

When the MRA.SM[1:0] bits or the MRB.DM[1:0] bits are set to address fixed, a part of the transfer information is not written back. Table 16.4 lists the transfer information write-back skip conditions and the associated registers. The CRA and CRB registers are written back, and the write-back of the MRA and MRB registers is skipped.

Table 16.4 Transfer information write-back skip conditions and applicable registers

MRA.SM[1:0] bits		MRB.DM[1:0] bits		SAR register	DAR register
b3	b2	b3	b2		
0	0	0	0	Skip	Skip
0	0	0	1		
0	1	0	0		
0	1	0	1		
0	0	1	0	Skip	Write-back
0	0	1	1		
0	1	1	0		
0	1	1	1		
1	0	0	0	Write-back	Skip
1	0	0	1		
1	1	0	0		
1	1	0	1		
1	0	1	0	Write-back	Write-back
1	0	1	1		
1	1	1	0		
1	1	1	1		

16.4.3 Normal Transfer Mode

The normal transfer mode allows a 1-byte (8 bit), 1-halfword (16 bit), 1-word (32 bit) data transfer on a single activation source. The transfer count can be set from 1 to 65536. Transfer source and destination addresses can be independently set to increment, decrement, or fixed. This mode enables an interrupt request to the CPU to be generated at the end of a specified-count transfer.

Table 16.5 lists register functions in normal transfer mode, and Figure 16.5 shows the memory map of normal transfer mode.

Table 16.5 Register functions in normal transfer mode

Register	Description	Value written back by writing transfer information
SAR	Transfer source address	Increment, decrement, or fixed*1
DAR	Transfer destination address	Increment, decrement, fixed*1
CRA	Transfer counter A	CRA - 1
CRB	Transfer counter B	Not updated

Note 1. Write-back operation is skipped in address-fixed mode.

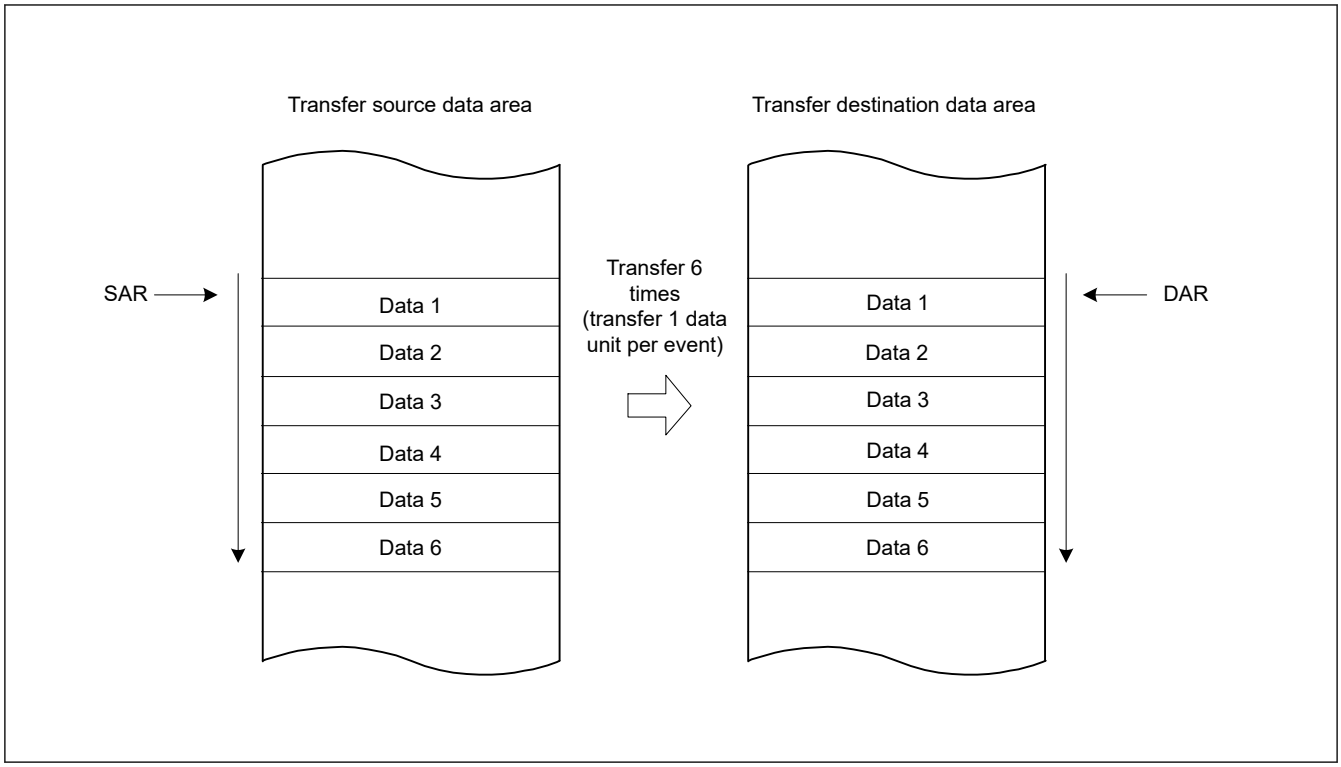

Figure 16.5 Memory map of normal transfer mode (MRA.SM[1:0] = 10b, MRB.DM[1:0] = 10b, CRA = 0x0006)

16.4.4 Repeat Transfer Mode

The repeat transfer mode allows a 1-byte (8-bit), 1-halfword (16-bit), or 1-word (32-bit) data transfer on a single activation source. Transfer source or transfer destination for the repeat area must be specified in the MRB.DTS bit. The transfer count can be set from 1 to 256. When the specified transfer count is complete, the initial value of the address register specified in the repeat area is restored, the initial value of the transfer counter is restored, and transfer is repeated. The other address register is incremented or decremented continuously or remains unchanged.

When the transfer counter CRAL decrements to 0x00 in repeat transfer mode, the CRAL value is updated to the value set in the CRAH register. As a result, the transfer counter does not clear to 0x00, which disables interrupt requests to the CPU when the MRB.DISEL bit is set to 0. An interrupt request to the CPU is generated when the specified data transfer completes.

Table 16.6 lists the register functions in repeat transfer mode, and Figure 16.6 shows the memory map of repeat transfer mode.

Table 16.6 Register functions in repeat transfer mode

Register	Description	Value written back by writing transfer information	
		When CRAL is not 1	When CRAL is 1
SAR	Transfer source address	Increment, decrement, fixed*1	• When the MRB.DTS bit is 0 Increment, decrement, or fixed*1 • When the MRB.DTS bit is 1 SAR register initial value
DAR	Transfer destination address	Increment, decrement, or fixed*1	• When the MRB.DTS bit is 0 DAR register initial value • When the MRB.DTS bit is 1 Increment, decrement, or fixed*1
CRAH	Retains transfer counter	CRAH	CRAH
CRAL	Transfer counter A	CRAL - 1	CRAH
CRB	Transfer counter B	Not updated	Not updated

Note 1. Write-back is skipped in address-fixed mode.

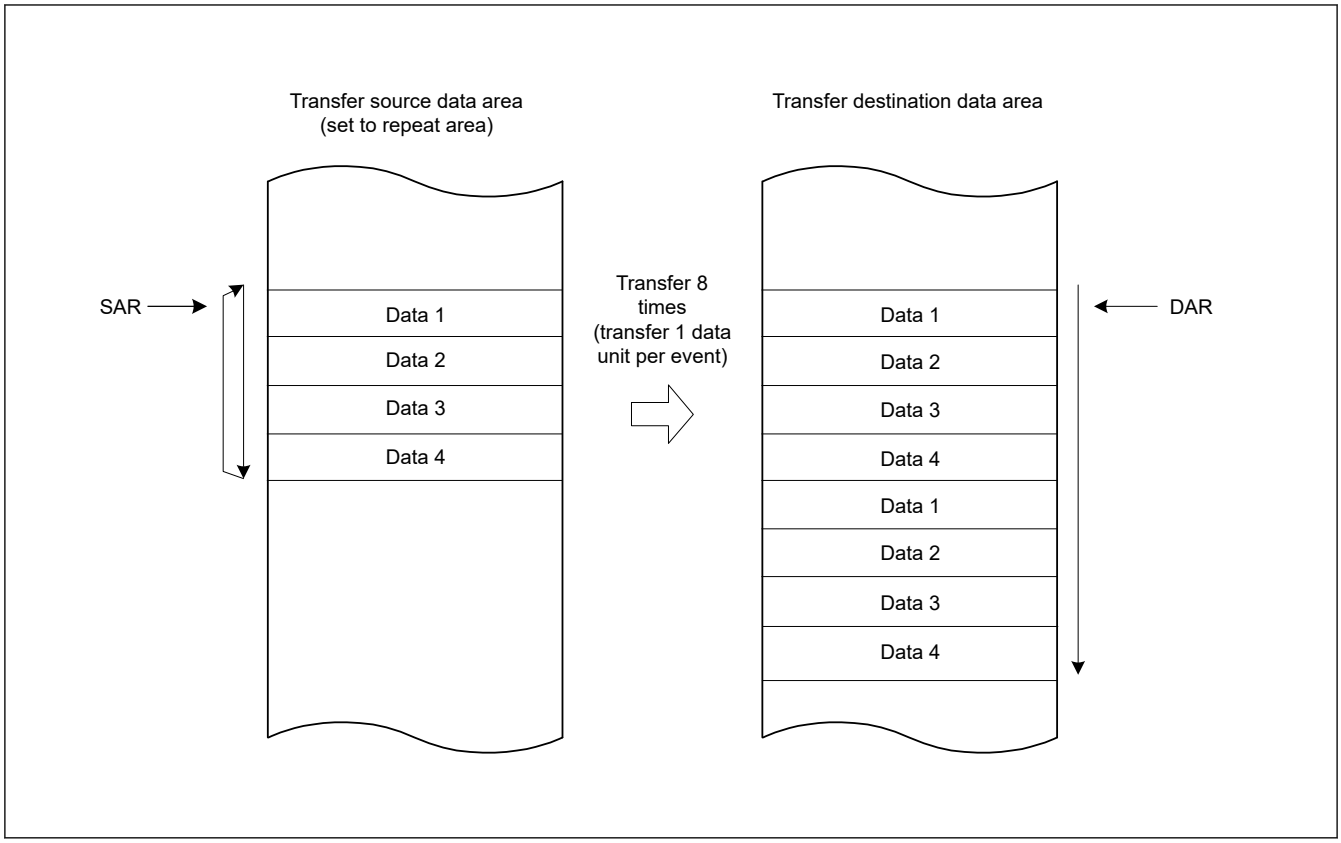

Figure 16.6 Memory map of repeat transfer mode when transfer source is a repeat area (MRA.SM[1:0] = 10b, MRB.DM[1:0] = 10b, CRAH = 0x04)

16.4.5 Block Transfer Mode

The block transfer mode allows single-block data transfer on a single activation source. Transfer source or transfer destination for the block area must be specified in the MRB.DTS bit. The block size can be set from 1 to 256 bytes, 1 to 256 halfwords (2 to 512 bytes), or 1 to 256 words (4 to 1024 bytes). When transfer of the specified block completes, the initial values of the block size counter CRAL and the address register (the SAR register when the MRB.DTS = 1 or the DAR register when the DTS = 0) specified in the block area are restored. The other address register is incremented or decremented continuously or remains unchanged.

The transfer count (block count) can be set from 1 to 65536. This mode enables an interrupt request to the CPU to be generated at the end of the specified-count block transfer.

Table 16.7 lists the register functions in block transfer mode, and Figure 16.7 shows the memory map for block transfer mode.

Table 16.7 Register functions in block transfer mode

Register	Description	Value written back by writing transfer information
SAR	Transfer source address	• When MRB.DTS bit is 0 Increment, decrement, or fixed[*1] • When MRB.DTS bit is 1 SAR register initial value.
DAR	Transfer destination address	• When MRB.DTS bit is 0 DAR register initial value • When MRB.DTS bit is 1 Increment, decrement, or fixed[*1].
CRAH	Holds block size	CRAH
CRAL	Block size counter	CRAH
CRB	Block transfer counter	CRB - 1

Note 1. Write-back is skipped in address-fixed mode.

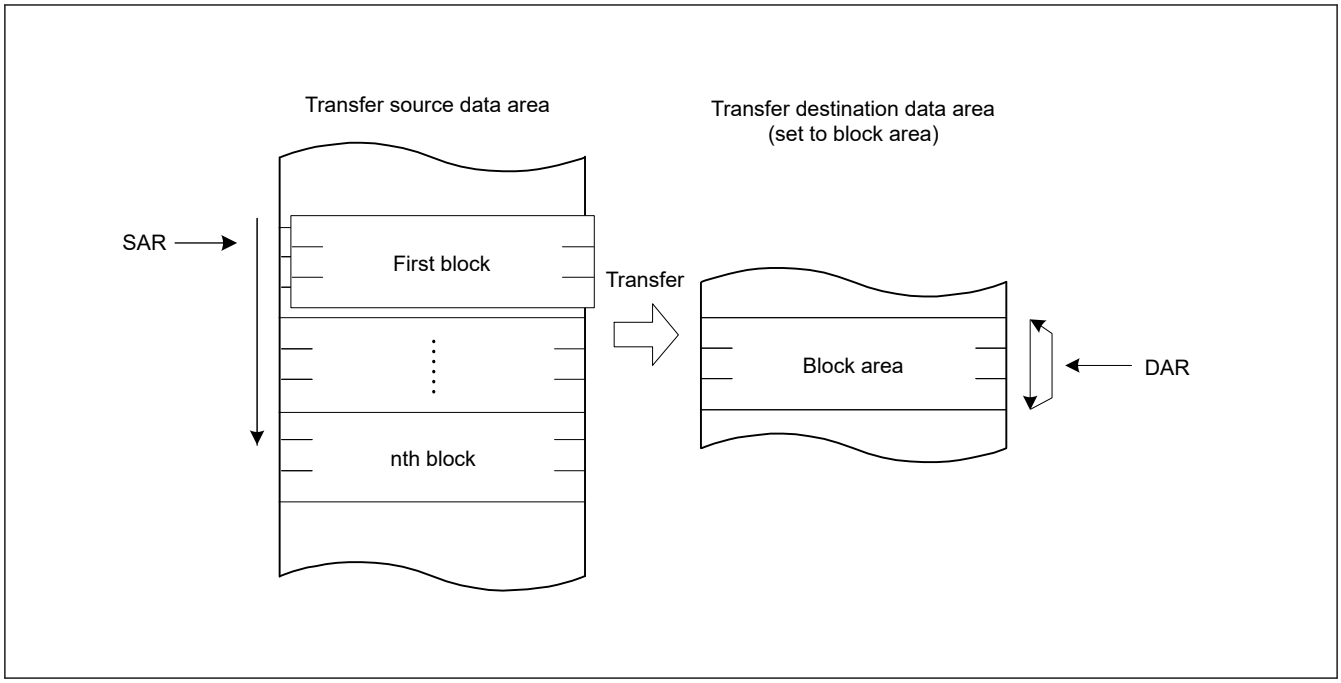

Figure 16.7 Memory map of block transfer mode

16.4.6 Chain Transfer

Setting the MRB.CHNE bit to 1 allows chain transfer to be performed continuously on a single activation source. If the MRB.CHNE is set to 1 and CHNS to 0, an interrupt request to the CPU is not generated on completion of the specified number of rounds of transfer or by setting the MRB.DISEL bit to 1. An interrupt request is sent to the CPU each time DTC data transfer is performed. Data transfer has no effect on the ICU.IELSRn.IR flag of the activation source.

The SAR, DAR, CRA, CRB, MRA, and MRB registers can be set independently of each other to define the data transfer. Figure 16.8 shows a chain transfer operation.

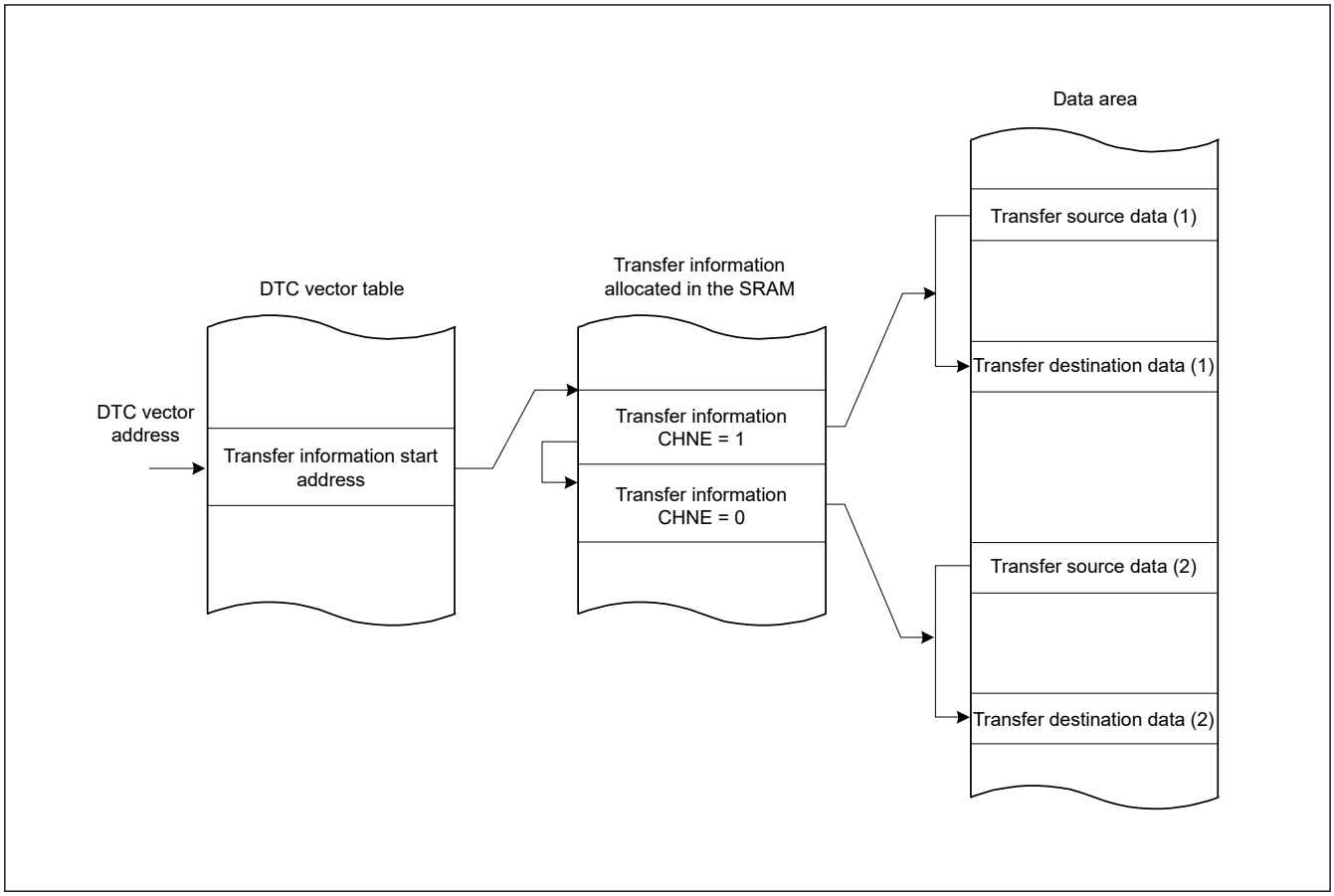

Figure 16.8 Chain transfer operation

Writing 1 to the MRB.CHNE and CHNS bits enables chain transfer to be performed only after completion of the specified data transfer. In repeat transfer mode, chain transfer is performed after completion of the specified data transfer. For details on chain transfer conditions, see Table 16.3.

16.4.7 Operation Timing

Figure 16.9 to Figure 16.12 are timing diagrams that show the minimum number of execution cycles.

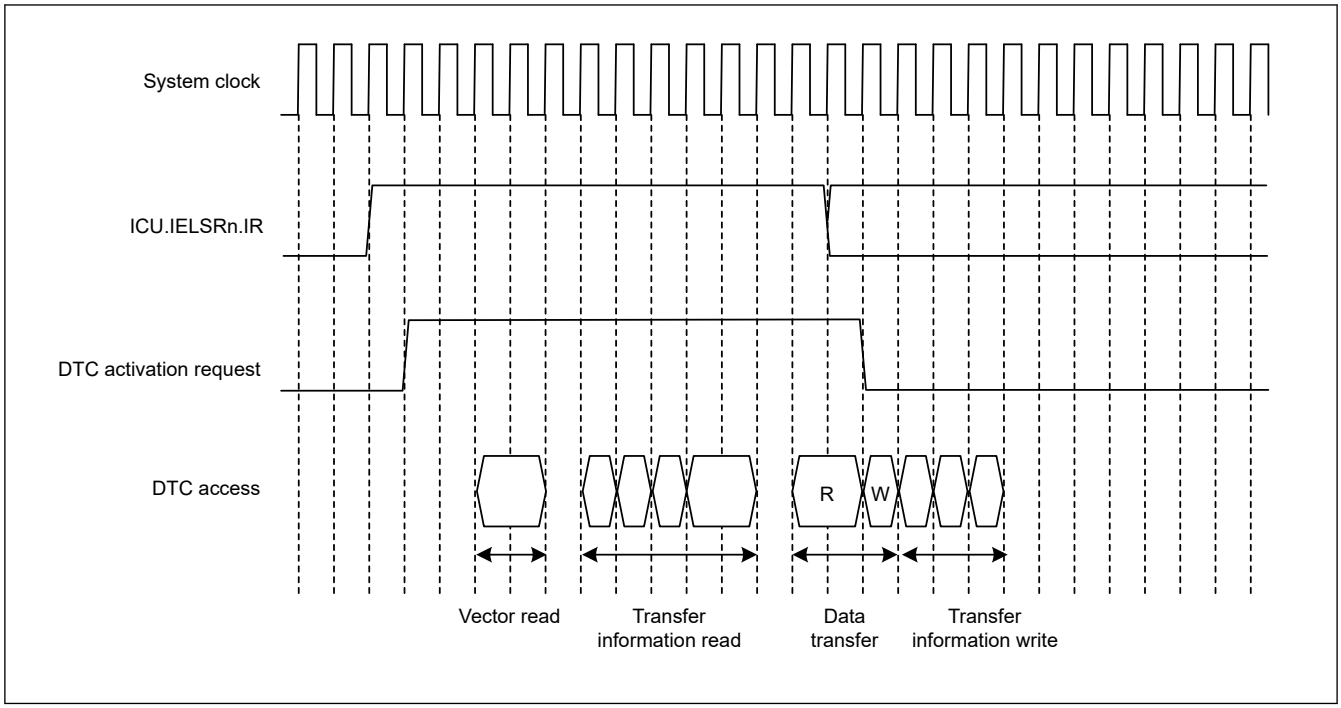

Figure 16.9 Example 1 of DTC operation timing in normal transfer and repeat transfer modes

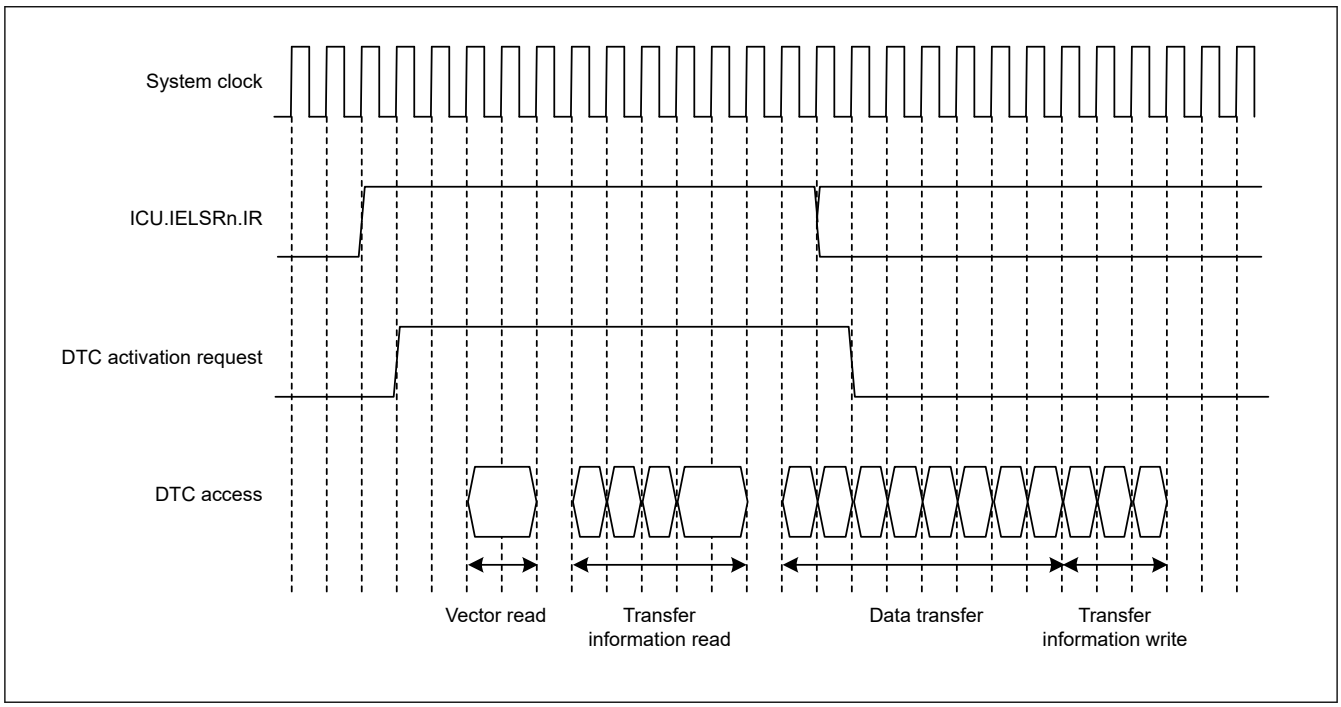

Figure 16.10 Example 2 of DTC operation timing in block transfer mode when the block size = 4

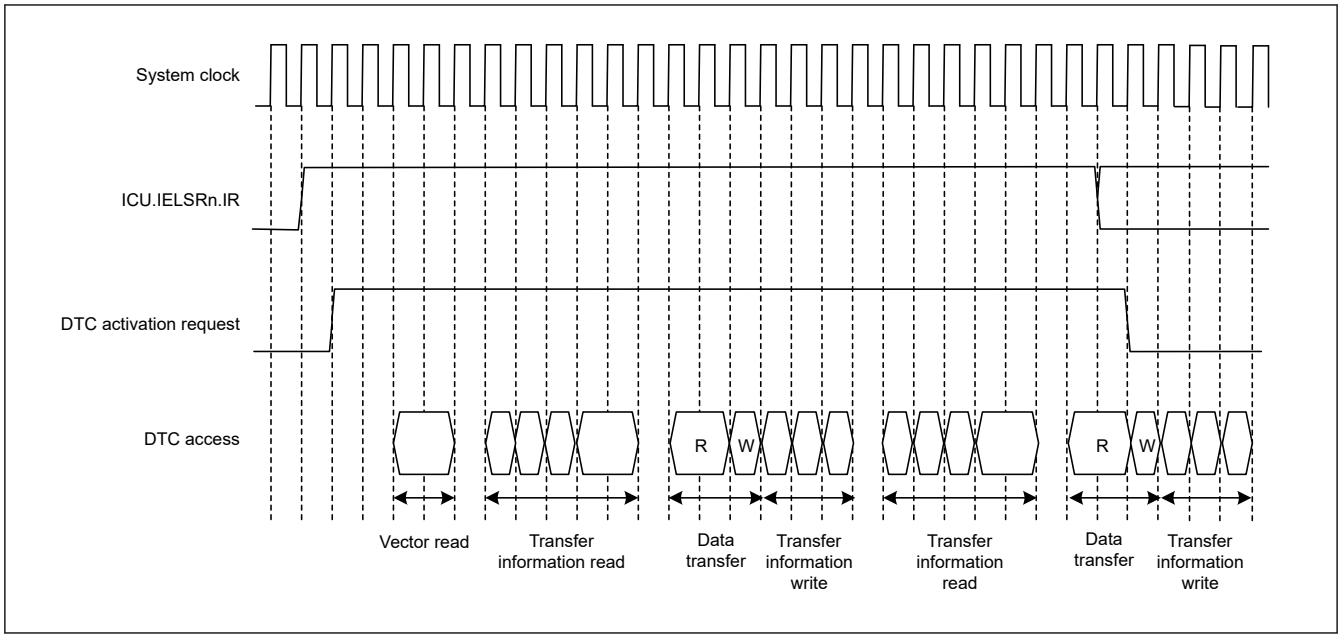

Figure 16.11 Example 3 of DTC operation timing for chain transfer

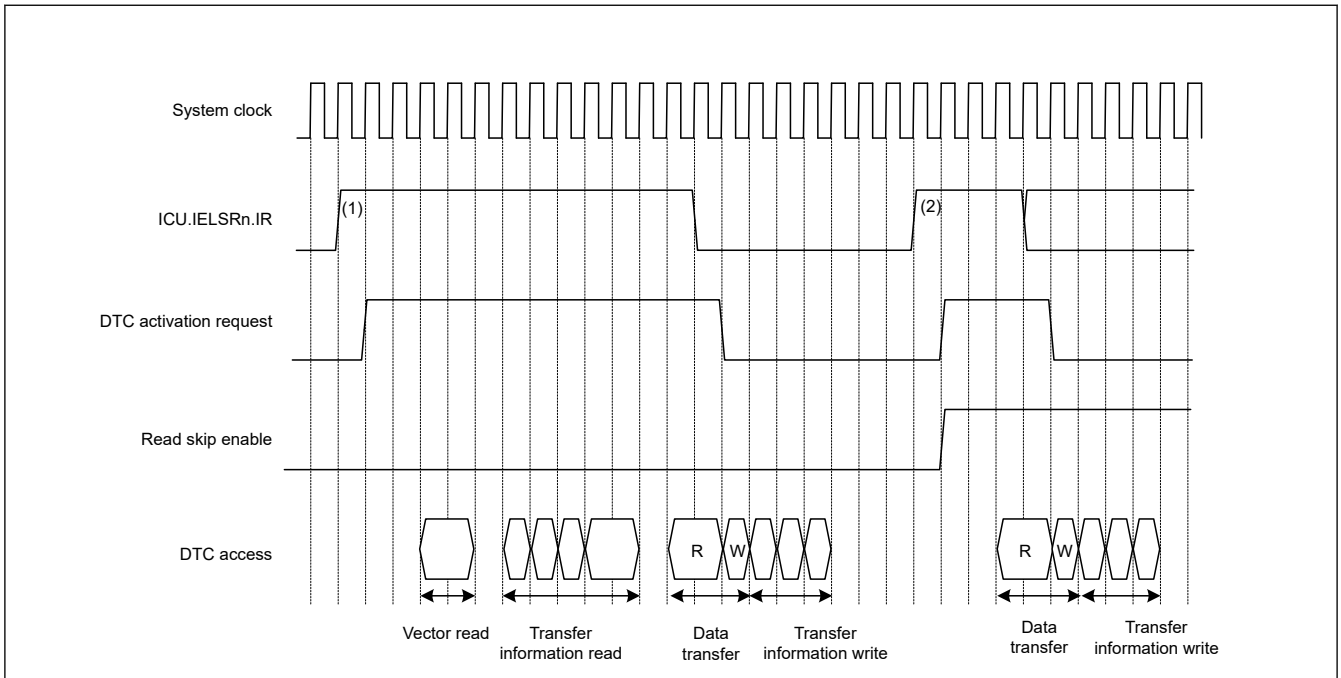

Note: When activation sources (vector numbers) of (1) and (2) are the same and the RRS = 1, the transfer information read for request (2) is skipped.

Figure 16.12 Example of operation when a transfer information read is skipped with the vector, transfer information, and transfer destination data on the SRAM, and the transfer source data on the peripheral module

16.4.8 Execution Cycles of DTC

Table 16.8 lists the execution cycles of single data transfer of the DTC. For the order of the execution states, see section 16.4.7. Operation Timing.

Table 16.8 Execution cycles of DTC

P: Block size (initial settings of CRAH and CRAL)
Cv: Cycles for access to vector transfer information storage destination
Ci: Cycles for access to transfer information storage destination address
Cr: Cycles for access to data read destination
Cw: Cycles for access to data write destination
The unit is for system clocks (ICLK) + 1 in the Vector read, Transfer information read, and Data transfer read columns and 2 in the Internal operation column.
Cv, Ci, Cr, and Cw vary depending on the corresponding access destination. For the number of cycles for respective access destinations, see section 38, SRAM, section 39, Flash Memory, and section 13, Buses.
The frequency ratio of the system clock and peripheral clock is also taken into consideration.
The DTC response time is the time from when the DTC activation source is detected until DTC transfer starts.
Table 16.8 does not include the time until DTC data transfer starts after the DTC activation source becomes active.

Transfer mode	Vector read		Transfer information read		Transfer information write			Data transfer		Internal operation	
								Read	Write		
Normal	Cv + 1	0*1	4 × Ci + 1	0*1	3 × Ci + 1*2	2 × Ci + 1*3	Ci*4	Cr + 1	Cw + 1	2	0*1
Repeat								Cr + 1	Cw + 1		
Block*5								P × Cr	P × Cw		

Note 1. When transfer information read is skipped.
Note 2. When neither SAR nor DAR is set to address-fixed mode.
Note 3. When SAR or DAR is set to address-fixed mode.
Note 4. When SAR and DAR are set to address-fixed mode.
Note 5. When the block size is 2 or more. If the block size is 1, the cycle number for normal transfer applies.

16.4.9 DTC Bus Mastership Release Timing

The DTC does not release the bus mastership during transfer information reads. Before the transfer information is read or written, the bus is arbitrated according to the priority determined by the bus master arbitrator. For bus arbitration, see section 13, Buses.

16.4.10 Vector Security

The security attribute of transfer access of DTC vector n and security attribute of access to the IELSRn (n = 0 to 63) register of ICU are controlled by SAIELSRn bit of ICUSARx (x = G, H or I) registers in CPSCU. For details on the CPSCU.ICUSARx registers, see section 12, Interrupt Controller Unit (ICU).

When the CPSCU.ICUSARx.SAIELSRn bit is 0, transfer of DTC vector n is Secure access for both read and write. At the same time, the IELSRn registers are protected from a Non-secure access.

When the CPSCU.ICUSARx.SAIELSRn bit is 1, transfer of DTC vector n is Non-secure access for both read and write. At the same time, the IELSRn register are Non-secure attributes.

Do not write to the CPSCU.ICUSARx.SAIELSRn bit while DTC transfer is enabled or a bus master is writing to the DTC registers of same channel.

section 16.3.1. Allocating Transfer Information and DTC Vector Table shows security attribute about each DTC vectors.

16.4.11 Master TrustZone Filter in DTC

DTC has Master TrustZone Filter. The Master TrustZone Filter in DTC can detect the security areas of Flash area (code flash and data flash) and SRAM area (ECC/Parity RAM) defined by IDAU. When non-secure program accesses those addresses, it detects the security violation. Access of violation address is not performed. Detected error is handled as Master TrustZone Filter error.

16.5 DTC Setting Procedure

Before using the DTC, set the DTC Vector Base Register (DTCVBR). Set the ICU.IELSRn.IELS[8:0] bits to 0 to disable the interrupt in the NVIC and follow the procedure in Table 16.9 to set the DTC.

Table 16.9 DTC setting procedure

No.	Step Name	Description
1	Set the DTCCR[*1].RRS bit to 0	Set the DTCCR[*1].RRS bit to 0 to reset the transfer information read skip flag. After that, the transfer information read is not skipped while the DTC is activated. Be sure to specify this setting when the transfer information is updated.
2	Set transfer information (MRA, MRB, SAR, DAR, CRA, and CRB)	Allocate transfer information (MRA, MRB, SAR, DAR, CRA, and CRB) in the data area. To set transfer information, see section 16.2. Register Descriptions. To allocate transfer information, see section 16.3.1. Allocating Transfer Information and DTC Vector Table.
3	Set transfer information start addresses in the DTC vector table	Set the transfer information start addresses in the DTC vector table. To set the DTC vector table, see section 16.3.1. Allocating Transfer Information and DTC Vector Table.
4	Set the DTCCR[*1].RRS bit to 1	Set the DTCCR[*1].RRS bit to 1 to enable skipping of the second and subsequent transfer information read cycles for continuous DTC activation from the same interrupt source. The RRS bit can be set to 1, but if this is set during DTC transfer, it becomes valid from the next transfer.
5	Set the ICU.IELSRn.DTCE bit to 1. Set the ICU.IELSRn.IELS[8:0] as interrupt source. The interrupt should be enabled in the NVIC.	Set the ICU.IELSRn.DTCE bit to 1. Set ICU.IELSRn.IELS[8:0] as interrupt sources that trigger DTC. The interrupt must be enabled in the NVIC. See section 12.3.2. Event Number in section 12, Interrupt Controller Unit (ICU).
6	Set the enable bit for an activation source interrupt	Set the enable bit for the activation source interrupts to 1. When a source interrupt is generated, the DTC is activated. To set the interrupt source enable bit, see the settings for the modules that are to be the activation sources.
7	Set the DTCST.DTCST bit to 1	Set the DTC Module Start bit (DTCST.DTCST) to 1.

Note: The DTCST.DTCST bit can be set even if the setting for each activation source is not completed.
Note: When used in Non-secure state, DTCSAR.DTCSTSA = 1 or DTCST.DTCST = 1 must be set.
Note 1. When used in Secure state, access DTCCR_SEC instead of DTCCR.

16.6 Examples of DTC Usage

16.6.1 Normal Transfer

This section provides an example of DTC usage and its application when receiving 128 bytes of data from an SCI.

(1) Transfer information settings

In the MRA register, select a fixed source address (MRA.SM[1:0] = 00b), normal transfer mode (MRA.MD[1:0] = 00b), and byte-sized transfer (MRA.SZ[1:0] = 00b). In the MRB register, specify incrementation of the destination address (MRB.DM[1:0] = 10b) and single data transfer by a single interrupt (MRB.CHNE = 0 and MRB.DISEL = 0). The MRB.DTS bit can be set to any value. Set the RDR register address of the SCI in the SAR register, the start address of the SRAM area for data storage in the DAR register, and 128 (0x0080) in the CRA register. The CRB register can be set to any value.

(2) DTC vector table settings

The start address of the transfer information for the RXI interrupt is set in the vector table for the DTC.

(3) ICU settings and DTC module activation

Set the ICU.IELSRn.DTCE bit to 1 and set ICU.IELSRn.IELS[8:0] as the SCI interrupt. The interrupt must be enabled in the NVIC. Set the DTCST.DTCST bit to 1.

(4) SCI settings

Enable the SCIn_RXI (n = 0, 1, 3 to 5, 9) interrupt by setting the SCR.RIE bit in the SCI to 1. If a reception error occurs during the SCI receive operation, reception stops. To manage this, use settings that allow the CPU to accept receive error interrupts.

(5) DTC transfer

Each time a reception of 1 byte by the SCI is complete, an SCIn_RXI interrupt is generated to activate the DTC. The DTC transfers the received byte from the RDR of the SCI to the SRAM, after which the DAR register is incremented and the CRA register is decremented.

(6) Interrupt handling

After 128 rounds of data transfer are complete and the value in the CRA register becomes 0, an SCIn_RXI interrupt request is generated for the CPU. Complete the process in the handling routine for this interrupt.

16.6.2 Chain Transfer

This section provides an example of chain transfer by the DTC and describes its use in the output of pulses by the General PWM Timer (GPT). You can use chain transfer to transfer PWM timer compare data and change the period of the PWM timer for the GPT.

For the first of the chain transfers, normal transfer mode is specified for transfer to the GPTm.GTCCRC register (m = 320, 321, 162 to 165). For the second transfer, normal transfer mode is specified for transfer to the GPTm.GTCCRE register (m = 320, 321, 162 to 165). For the third transfer of the chained transfer, normal transfer mode for transfer to the GPTm.GTPBR register (m = 320, 321, 162 to 165) is specified. This is because clearing of the activation source and generation of an interrupt on completion of the specified number of transfers are restricted to the third of the chain transfers, that is, transfer while MRB.CHNE = 0.

The following example shows how to use the counter overflow interrupt with the GPT320.GTPR register as an activating source for the DTC.

(1) First transfer information setting

Set up transfer to the GPT320.GTCCRC register.

1. In the MRA register, select incrementation of the source address (MRA.SM[1:0] = 10b).
2. Set the transfer to normal transfer mode (MRA.MD[1:0] = 00b) and word-sized transfer (MRA.SZ[1:0] = 10b).
3. In the MRB register, select the destination address as fixed (MRB.DM[1:0] = 00b) and set up chain transfer (MRB.CHNE = 1 and MRB.CHNS = 0).
4. Set the SAR register to the first address of the data table.
5. Set the DAR register to the address of the GPT320.GTCCRC register.
6. Set the CRAH and CRAL registers to the size of the data table. The CRB register can be set to any value.

(2) Second transfer information setting

Set up for transfer to the GPT320.GTCCRE register.

1. In the MRA register, select incrementation of the source address (MRA.SM[1:0] = 10b).
2. Set the transfer to normal transfer mode (MRA.MD[1:0] = 00b) and word-sized transfer (MRA.SZ[1:0] = 10b).
3. In the MRB register, select the destination address as fixed (MRB.DM[1:0] = 00b) and set up chain transfer (MRB.CHNE = 1, MRB.CHNS = 0).
4. Set the SAR register to the first address of the data table.
5. Set the DAR register to the address of the GPT320.GTCCRE register.
6. Set the CRAH and CRAL registers to the size of the data table. The CRB register can be set to any value.

(3) Third transfer information set

Set up transfer to the GPT320.GTPBR register.

1. In the MRA register, select incrementation of the source address (MRA.SM[1:0] = 10b).
2. Set the transfer to normal transfer mode (MRA.MD[1:0] = 00b) and word-sized transfer (MRA.SZ[1:0] = 10b).
3. In the MRB register, select the destination address as fixed (MRB.DM[1:0] = 00b) and set up single data transfer per interrupt (MRB.CHNE = 0, MRB.DISEL = 0). The MRB.DTS bit can be set to any value.

4. Set the SAR register to the first address of the data table.
5. Set the DAR register to the address of the GPT320.GTPBR register.
6. Set the CRA register to the size of the data table. The CRB register can be set to any value.

(4) Transfer information assignment

Place the transfer information for use in the transfer to the GPT320.GTPBR immediately after the transfer control information for use in the GPT320.GTCCRC and GPT320.GTCCRE registers.

(5) DTC vector table

In the DTC vector table, set the address where the transfer control information for use in transfer to the GPT320.GTCCRC and GPT320.GTCCRE registers starts.

(6) ICU setting and DTC module activation

1. Set the ICU.IELSRn.DTCE bit associated with the GPT320 counter overflow interrupt.
2. Set the ICU.IELSRn.IELS[8:0] bits and specify the GPT320 counter overflow.
3. Set the DTCST.DTCST bit to 1.

(7) GPT settings

1. Set the GPT320.GTIOR register so that the GTCCRA and GTCCRB registers operate as output compare registers.
2. Set the default PWM timer compare values in the GPT320.GTCCRA and GPT320.GTCCRB registers and the next PWM timer compare values in the GPT320.GTCCRC and GPT320.GTCCRE registers.
3. Set the default PWM timer period values in the GPT320.GTPR register and the next PWM timer period values in the GPT320.GTPBR register.
4. Set 1 to the output bit in PmnPFS.PDR, and set 00011b to the Peripheral Select bits in PmnPFS.PSEL[4:0].

(8) GPT activation

Set the GPT320.GTSTR.CSTRT bits to 1 to start the GPT320.GTCNT counter.

(9) DTC transfer

Each time a GPT320 counter overflow is generated with the GPT320.GTPR register, the next PWM timer compare values are transferred to the GPT320.GTCCRC and GPT320.GTCCRE registers. The setting for the next PWM timer period is transferred to the GPT320.GTPBR register.

(10) Interrupt handling

After the specified rounds of data transfer are complete, for example when the value in the CRA register for GPT transfer becomes 0, a GPT320 counter overflow interrupt request is issued for the CPU. Complete the process for this interrupt in the handling routine.

16.6.3 Chain Transfer when Counter = 0

The second data transfer is performed only when the transfer counter is set to 0 in the first data transfer, and the first data transfer information is repeatedly changed in the second transfer. Chain transfer enables transfers to be repeated 256 times or more.

The following procedure shows an example of configuring a 1-KB input buffer, where the input buffer is set so that its lower address starts with 0x00. Figure 16.13 shows a chain transfer when the counter = 0.

1. Set the normal transfer mode to input data for the first data transfer. Set the following:
   (a) Transfer source address = fixed.
   (b) CRA register = 0x0200 (512) times.
   (c) MRB.CHNE bit = 1 (chain transfer is enabled).
   (d) MRB.CHNS bit = 1 (chain transfer is performed only when the transfer counter is 0).

(e) MRB.DISEL bit = 0 (an interrupt request to the CPU is generated when the specified data transfer completes).

2. Prepare the upper 8-bit address of the start address at every 512 times of the transfer destination address for the first data transfer in different area such as the flash. For example, when setting the input buffer to 0x8000 to 0x83FF, prepare 0x82 and 0x80.
3. For the second data transfer:
   (a) Set the repeat transfer mode (with transfer source and destination address = fixed.) to reset the transfer counter of the first data transfer.
   (b) Specify the CRA register in the first transfer information area for the transfer destination.
   (c) Set the MRB.CHNE bit = 1 (chain transfer is enabled).
   (d) Set the MRB.CHNS bit = 0 (select continuous chain transfer).
   (e) Set the MRB.DISEL bit = 0 (an interrupt request to the CPU is generated when the specified data transfer completes).
   (f) CRA register = 0x0101 (The transfer count is 1).
4. For the third data transfer:
   (a) Set the repeat transfer mode (with the source as the repeat area) to reset the transfer destination address of the first data transfer.
   (b) Specify the upper 8 bits of the DAR register in the first transfer information area for the transfer destination.
   (c) Set the MRB.CHNE bit = 0 (chain transfer is disabled).
   (d) Set the MRB.DISEL bit = 0 (an interrupt request to the CPU is generated when the specified data transfer completes).
   (e) When setting the input buffer to 0x8000 to 0x83FF, also set the transfer counter to 2.
5. The first data transfer is performed by an interrupt 512 times. When the transfer counter of the first data transfer becomes 0, the second data transfer starts. Set the transfer counter of the first data transfer to 0x0200. The lower 8 bits of the transfer destination address and the transfer counter of the first data transfer becomes 0x0200.
6. The second data transfer is performed by an interrupt 1 times. When the transfer counter of the first data transfer becomes 0, the third data transfer starts. Set the upper 8 bits of the transfer destination address of the first data transfer to 0x82. The lower 8 bits of the transfer destination address becomes 0x00 and the transfer counter of the first data transfer becomes 0x0200.
7. In succession, the first data transfer is performed by an interrupt 512 times as specified for the first data transfer. When the transfer counter of the first data transfer becomes 0, the second data transfer starts. Set the transfer counter of the first data transfer to 0x0200. The lower 8 bits of the transfer destination address and the transfer counter of the first data transfer becomes 0x0200.
8. The second data transfer is performed by an interrupt 1 times. When the transfer counter of the first data transfer becomes 0, the third data transfer starts. Set the upper 8 bits of the transfer destination address of the first data transfer to 0x80. The lower 8 bits of the transfer destination address becomes 0x00 and the transfer counter of the first data transfer becomes 0x0200.
9. Steps 5 to 8 are repeated indefinitely. Because the second data transfer is in repeat transfer mode, no interrupt request to the CPU is generated.

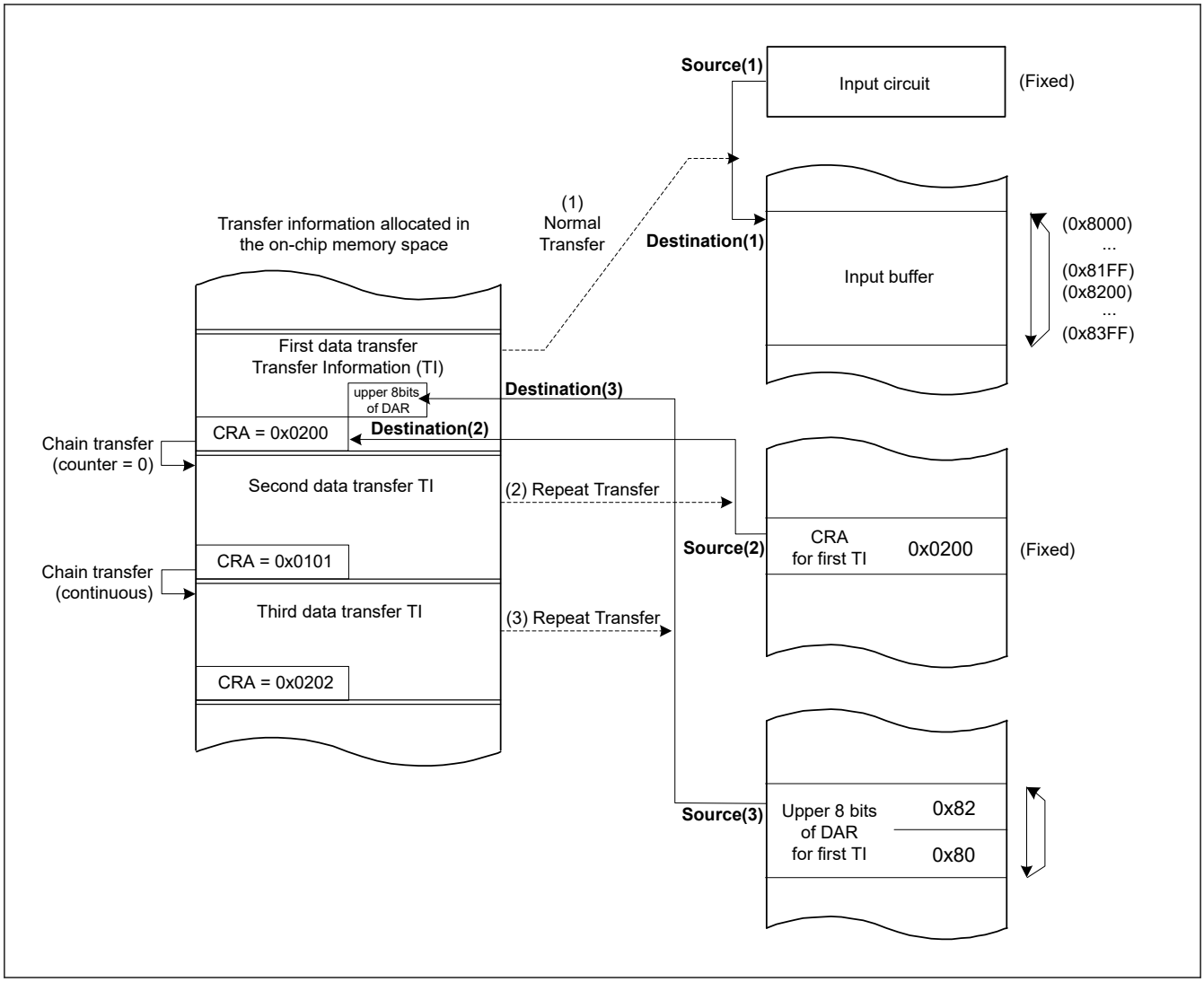

Figure 16.13 Chain transfer when counter = 0

16.7 Processing on DTC Transfer Error

If the access error occurs during DTC transfer, the DTC immediately stops access during transfer. To stop only the vector number that caused the error, inform the vector number that caused the error to the ICU and clear the corresponding ICU setting. After that, if there is a request other than the vector number which caused the error, it will be re-arbitration as it is. The condition under which the transfer error occurs is indicated when TrustZone Filter in DTC detects a violation.

The error response is informed to ICU when the transfer error occurs. ICU clears the ICU.IELSRn of the corresponding vector number which caused the transfer error. Furthermore, it generates an error response detection interrupt to notify that an error has occurred by DMAC/DTC transfer. (section 16.8.2. Interrupt Request of Transfer Error). Write back to SRAM is not performed.

When the Master TrustZone Filter error occurs, the Slave TrustZone error occurs or the Master MPU error occurs, it is possible to confirm the error information of DTC by selecting NMI. The DTC error vector register is cleared by selecting reset. Under the conditions where NMI is generated due to transfer error in DTC, two interrupts(NMI and DMA_TRANSERR) are generated. In this case, NMI always responds first.

The error response detection interrupt request (DMA_TRANSERR) occurs when the Slave Bus error or the Illegal Access error occurs. Furthermore, it occurs after NMI when the error response detection interrupt request (DMA_TRANSERR) is not cleared in NMI handler.

section 16.7.1. Processing on NMI handler describes how to confirm the error information of the DTC in the NMI handler. section 16.7.2. Processing on Error response detection interrupt request (DMA_TRANSERR) handler describes how to confirm the error information of the DTC in the DMA_TRANSERR handler.

Interrupts and the error information generated due to transfer errors are shown in section 16.8.2. Interrupt Request of Transfer Error.

16.7.1 Processing on NMI handler

The cause of NMI due to the DMA transfer error is the Master TrustZone Filter error, the Slave TrustZone Filter error or the Master MPU error. When NMI occurs due to the DTC transfer error, the error response detection interrupt request (DMA_TRANSERR) occurs after the end of NMI handler. It is possible to confirm the cause of the error and the DTC vector number in which the error occurred. When NMI occurs, perform the necessary processing according to the flow described in section 12, Interrupt Controller Unit (ICU).

Figure 16.14 shows the flow to confirm the vector number that caused the Master TrustZone Filter error in DTC.

Figure 16.15 shows the flow to confirm the vector number that caused the Slave TrustZone Filter error in DTC.

Figure 16.16 shows the flow to confirm the vector number and Security Attribute that caused the Master MPU error in DTC.

If completing all processing in NMI handler, it is possible to clear the error response detection interrupt request (DMA_TRANSERR) that occurs subsequently.

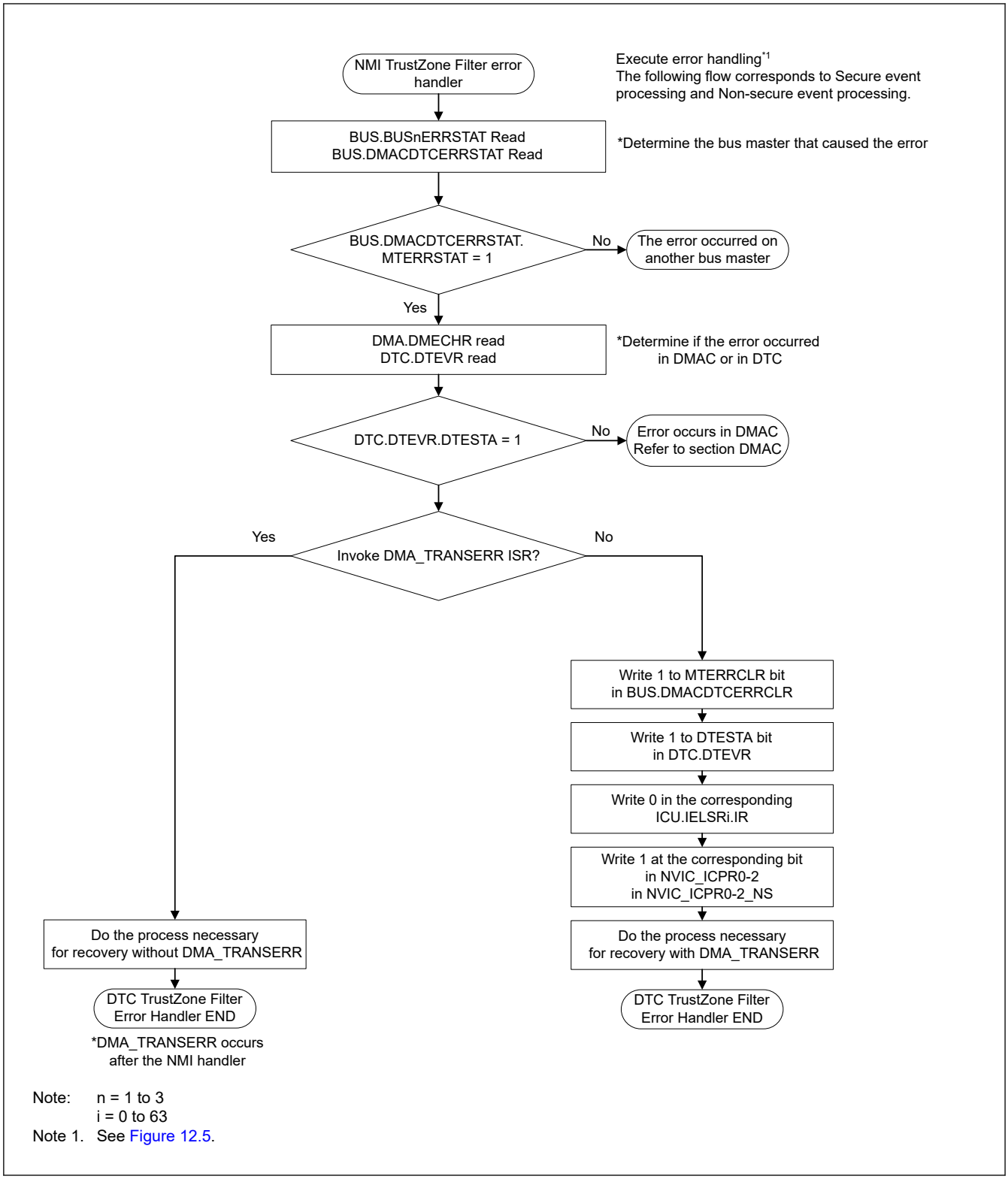

Figure 16.14 Processing in NMI handler by Master TrustZone Filter error

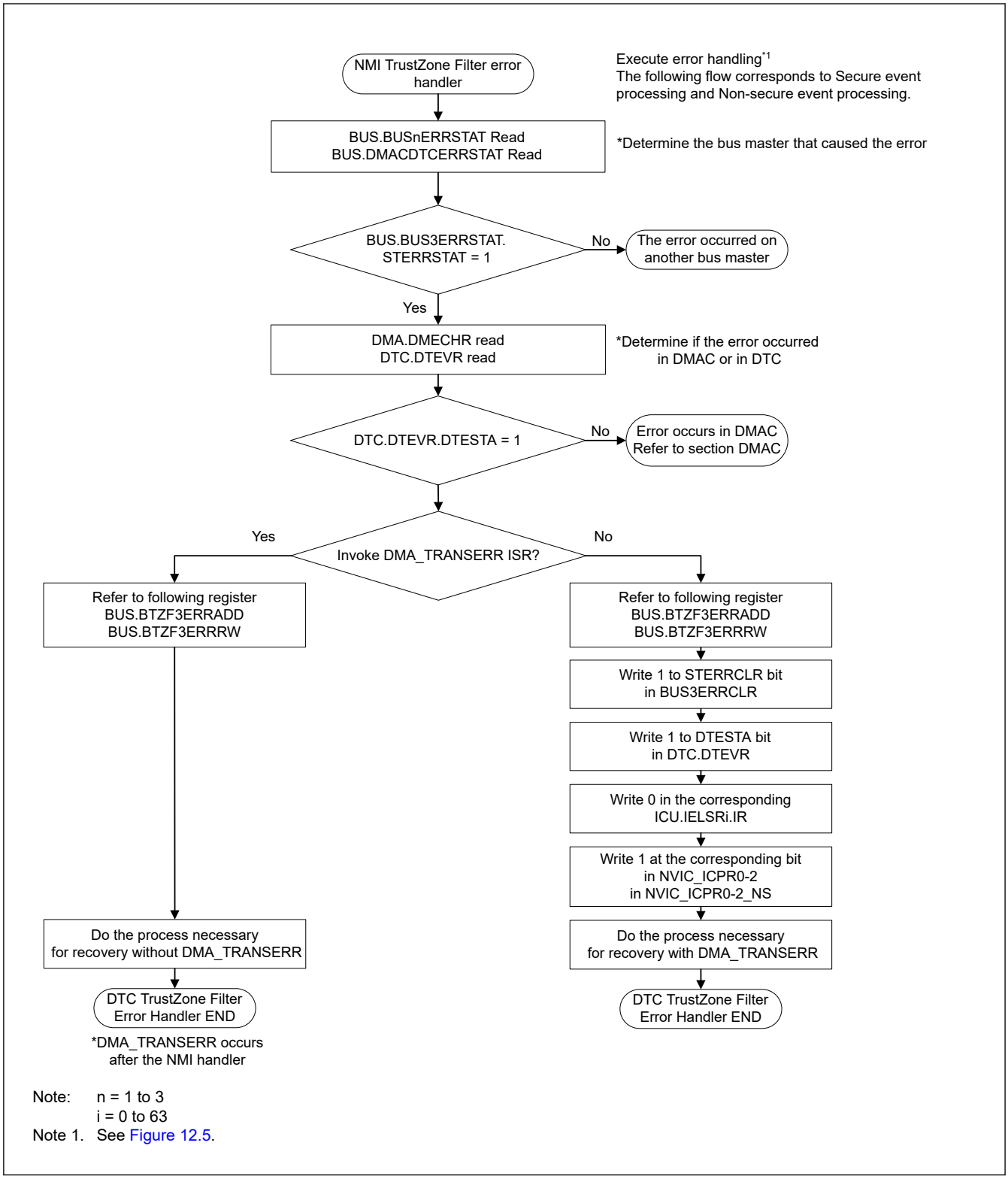

Figure 16.15 Processing in NMI handler by Slave TrustZone Filter error

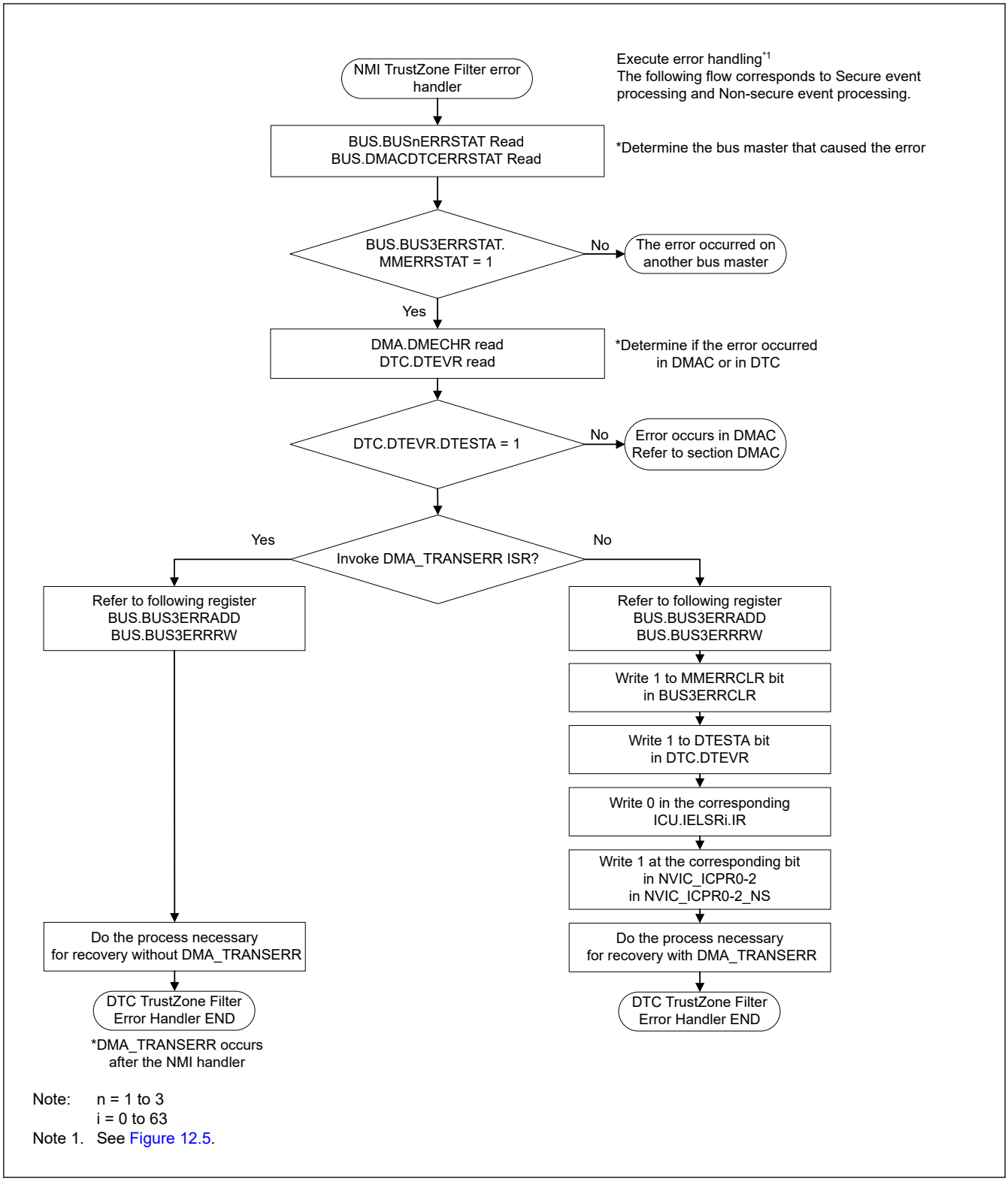

Figure 16.16 Processing in NMI handler by Master MPU error

16.7.2 Processing on Error response detection interrupt request (DMA_TRANSERR) handler

The cause of error response detection interrupt request (DMA_TRANSERR) due to DMA transfer error is the Slave Bus Error or Illegal Access Error. Also, it occurs after the NMI handler error response detection interrupt request (DMA_TRANSERR) is not cleared by the NMI handler.

It is possible to confirm the cause of the error and the vector number of DTC in which the error occurred.

Error cause confirmation procedure is shown Figure 16.17.

Figure 16.18 shows the flow for confirm the vector number that caused the Master TrustZone Filter Error in DTC

Figure 16.19 shows the flow for confirm the vector number that caused the Slave TrustZone Filter Error in DTC

Figure 16.20 shows the flow for confirm the vector number and Security Attribute that caused the Master MPU Error in DTC

Figure 16.21 shows the flow for confirm the vector number and Security Attribute that caused the Slave Bus Error in DTC

Figure 16.22 shows the flow for confirm the vector number and Security Attribute that caused the Illegal Access Error in DTC

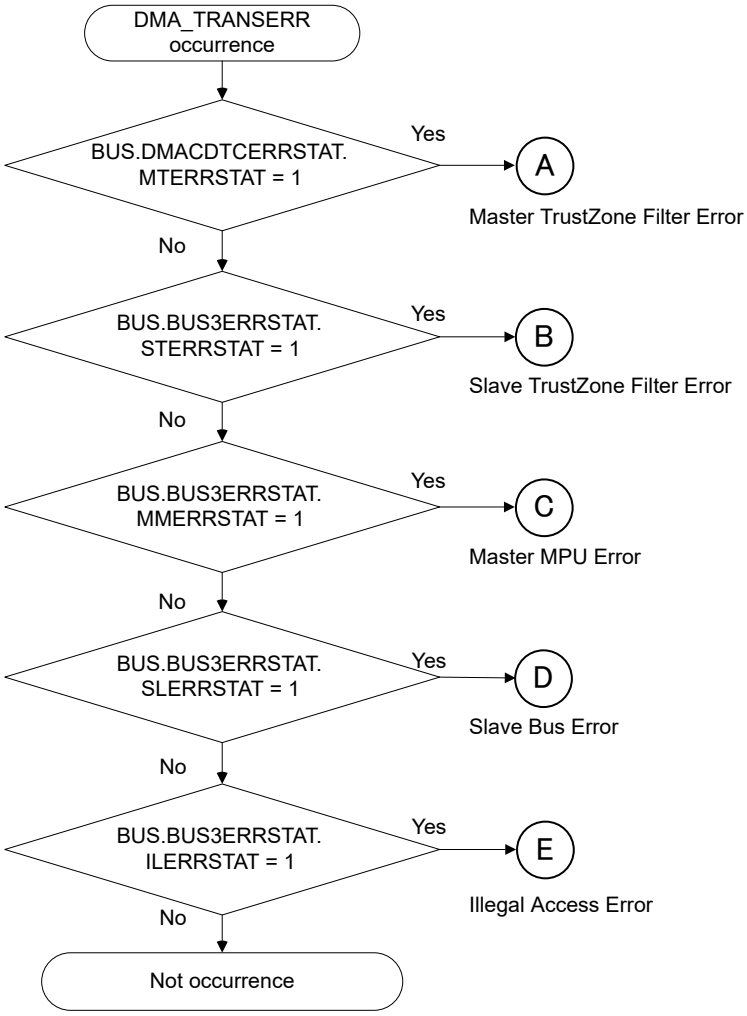

Figure 16.17 Transfer error factor judgment when the error response detection interrupt (DMA_TRANSERR) occurs

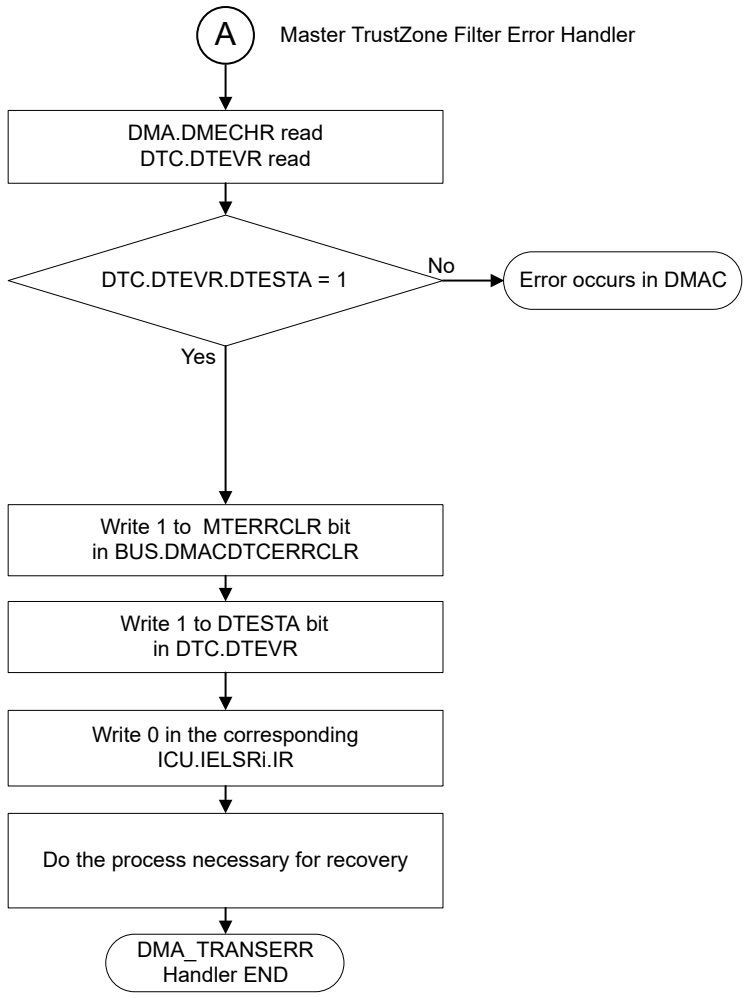

Note: i = 0 to 63

Figure 16.18 Processing in DMA_TRANSERR handler by Master TrustZone Filter Error

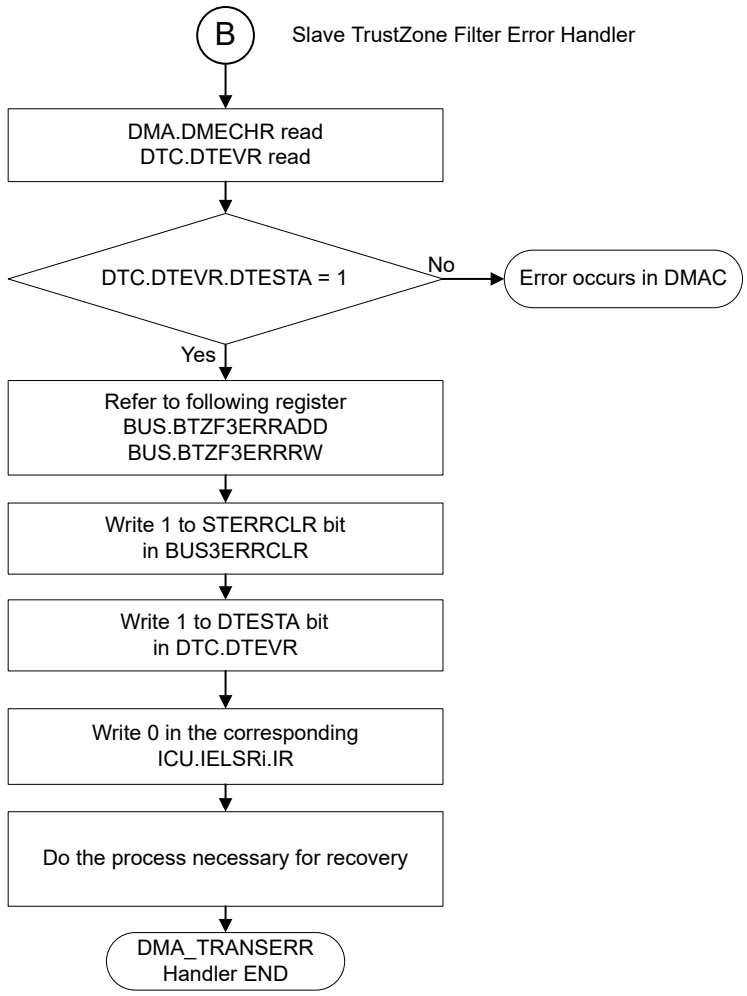

Note: i = 0 to 63

Figure 16.19 Processing in DMA_TRANSERR handler by Slave TrustZone Filter Error

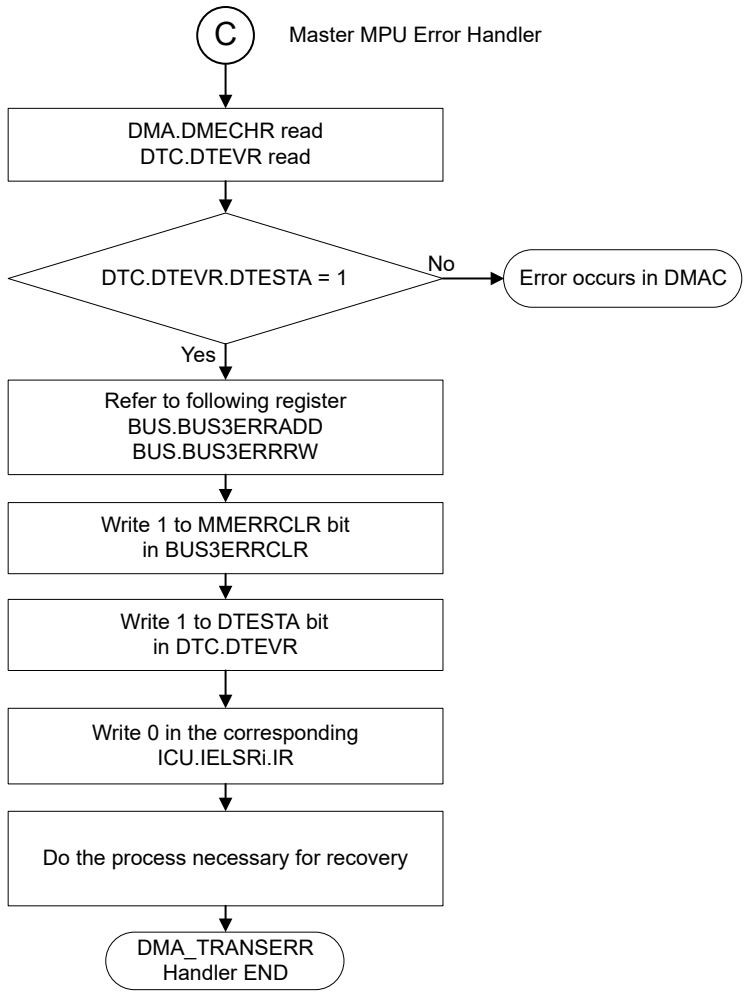

Note: i = 0 to 63

Figure 16.20 Processing in DMA_TRANSERR handler by Master MPU Error

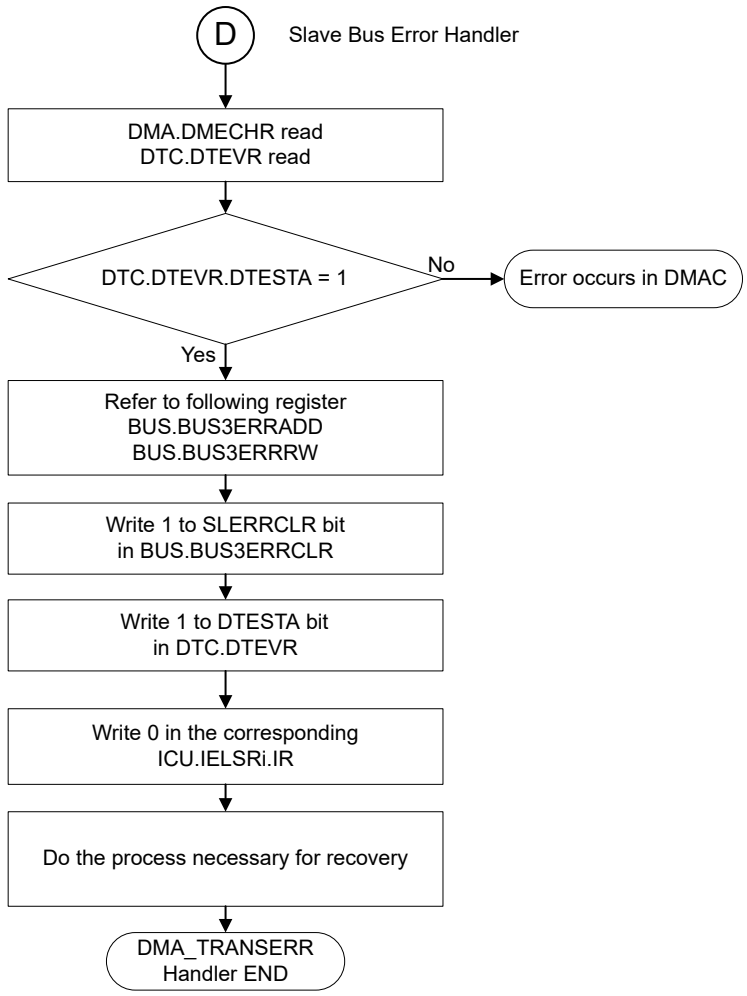

Note: i = 0 to 63

Figure 16.21 Processing in DMA_TRANSERR handler by Slave Bus Error

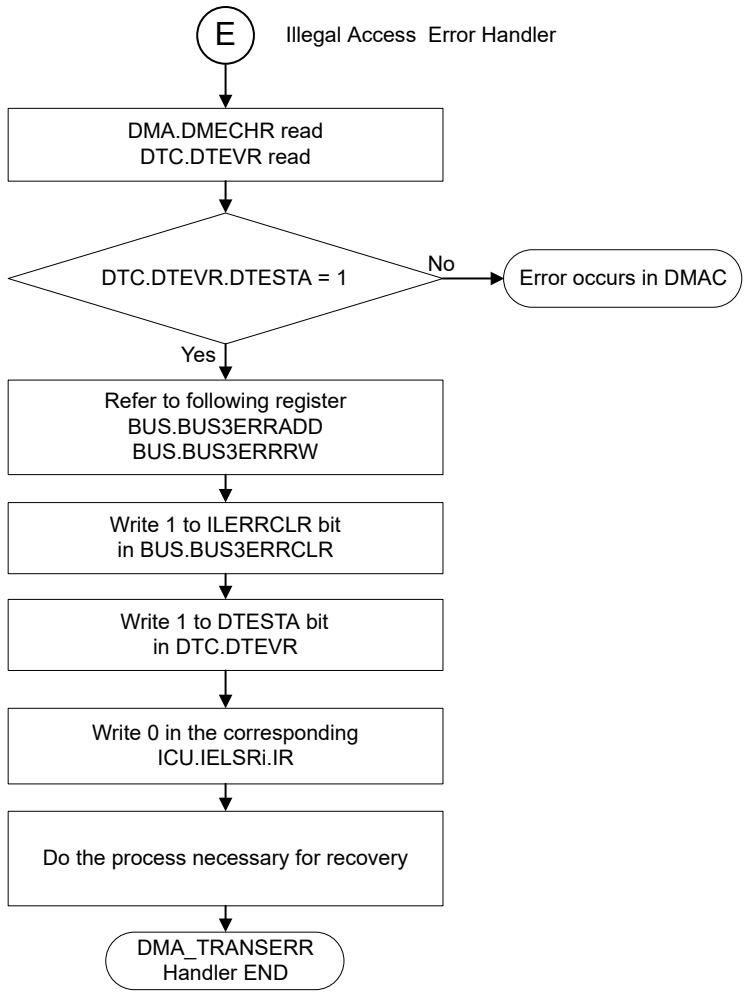

Note: i = 0 to 63

Figure 16.22 Processing in DMA_TRANSERR handler by Illegal Access Error

16.8 Interrupt

16.8.1 Interrupt Request of Transfer End

When the DTC completes data transfer of the specified count or when data transfer with MRB.DISEL set to 1 is complete, a DTC activation source generates an interrupt to the CPU. Two types of interrupt are available: interrupts triggered by a DTC activation (per channel) and an interrupt triggered by the event signal DTC_COMPLETE (common to all channels). Interrupts to the CPU are controlled according to the settings in the NVIC and the ICU.IELSRn.IELS[8:0] bits. See section 12, Interrupt Controller Unit (ICU). The DTC prioritizes activation sources by granting the smaller interrupt vector numbers higher priority. The priority of interrupts to the CPU is determined by the NVIC priority.

16.8.2 Interrupt Request of Transfer Error

The error response detection interrupt request (DMA_TRANSERR) is generated from the DMAC/DTC when the transfer error is detected during DTC transfer. The types of interrupts that occur when the DTC transfer error occurs are listed in the Table 16.10. The Table 16.10 also shows error information stored when a transfer error occurs.

Table 16.10 Interrupt and error information due to DTC transfer error cause

Transfer error factor	NMI/RESET*1 Request	Interrupt Request	Bus Error Status	Error Address Error R/W	Error Channel Information
Master TrustZone Filter (in DMAC/DTC)	ICU.NMISR.TZFST*1	DMA_TRANSERR	BUS.DMACDTCERRSTAT.MTERRSTAT*1	—	DTC.DTEVR
Slave TrustZone Filter	ICU.NMISR.TZFST*1	DMA_TRANSERR	BUS.BUS3ERRSTAT.STERRSTAT*1	BUS.BTZF3ERRADD BUS.BTZF3ERRRW	DTC.DTEVR
Master MPU	ICU.NMISR. BUSMST	DMA_TRANSERR	BUS.BUS3ERRSTAT.MMERRSTAT	BUS.BUS3ERRADD BUS.BUS3ERRRW	DTC.DTEVR
Slave Bus Error	—*2	DMA_TRANSERR	BUS.BUS3ERRSTAT.SLERRSTAT*2	BUS.BUS3ERRADD BUS.BUS3ERRRW	DTC.DTEVR
Illegal Access Error	—*2	DMA_TRANSERR	BUS.BUS3ERRSTAT.ILERRSTAT*2	BUS.BUS3ERRADD BUS.BUS3ERRRW	DTC.DTEVR

Note 1. Interrupt generated, when NMI request selected as the operation after detection of the Master MPU error and The TrustZone Filter error. By confirming BUS.BUS3ERRSTAT and BUS.DMACDTCERRSTAT, judge whether it is the Master or the Slave.
Note 2. If the error response detection interrupt (DMA_TRANSERR) occurs and NMI of the Master MPU or NMI of the TrustZone Filter has not occurred, treat it as the Illegal address access error or the Slave Bus Error. It can be judged also by BUS.BUS3ERRSTAT and BUS. DMACDTCERRSTAT.

Note that if the bus error occurs when writing the last data of transfer, the transfer end event and the error response detection interrupt (DMA_TRANSERR) occurs.

16.9 Event Link

The DTC can produce an event link request on completion of one transfer request.

16.10 Low Power Consumption Function

Before transitioning to the module-stop state, Software Standby mode without Snooze mode transition, set the DTCST.DTCST bit to 0, and then perform the operations described in the following sections. The DTC is available in Snooze mode by setting the SYSTEM.SNZCR.SNZDTCEN bit to 1. See section 10, Low Power Modes.

(1) Module-Stop Function

Writing 1 to the MSTPCRA.MSTPA22 bit enables the module-stop function of the DTC. If a DTC transfer is in progress when 1 is written to the MSTPCRA.MSTPA22 bit, the transition to the module-stop state proceeds after the DTC transfer ends. While the MSTPCRA.MSTPA22 bit is 1, accessing the DTC registers is prohibited. Writing 0 to the MSTPCRA.MSTPA22 bit releases the DTC from the module-stop state.

(2) Software Standby Mode

Use the settings described in section 10.7.1. Transitioning to Software Standby Mode.

If DTC transfer operations are in progress when the WFI instruction is executed, the transition to Software Standby mode is executed after the completion of the DTC transfer.

(3) Snooze Mode

When the snooze control circuit receives a snooze request in Software Standby mode, the MCU transitions to Snooze mode. See section 10.8.1. Transition to Snooze Mode. DTC operation in Snooze mode can be selected in the SYSTEM.SNZCR.SNZDTCEN bit. If DTC operation is enabled in Snooze mode, before transitioning to Software Standby mode, set the DTCST.DTCST bit to 1. To return to Software Standby mode through DTC, set SYSTEM.SNZEDCR0.DTCZRED or SYSTEM.SNZEDCR0.DTCNZRED to 1. See section 10.8.3. Returning to Software Standby Mode from Snooze Mode. SYSTEM.SNZEDCR0.DTCZRED enables or disables a snooze end request on completion of the last DTC transmission, detected on DTC transmission completion when CRA and CRB are 0. SYSTEM.SNZEDCR0.DTCNZRED enables or disables a snooze end request on a not last DTC transmission completion (CRA and CRB are not 0), detected on DTC transmission completion when CRA and CRB are not 0. The DTC activation request from the ICU is stopped during Software Standby mode but not stopped during Snooze mode.

(4) Notes on Low Power Consumption Function

For the WFI instruction and the register setting procedure, see section 10, Low Power Modes.

To perform a DTC transfer after returning from a low power mode without a Snooze mode transition, set the DTCST.DTCST bit to 1 again.

To use a request that is generated in Software Standby mode as an interrupt request to the CPU but not as a DTC activation request, specify the CPU as the interrupt request destination as described in section 12.4.1. Detecting Interrupts, then execute the WFI instruction. If DTC operation is enabled in Snooze mode, do not use the module-stop function of the DTC.

16.11 Usage Notes

16.11.1 Transfer Information Start Address

You must set multiples of 4 for the transfer information start addresses in the vector table. Otherwise, such addresses are accessed with their lowest 2 bits regarded as 00b.

17. Event Link Controller (ELC)

17.1 Overview

The Event Link Controller (ELC) uses the event requests generated by various peripheral modules as source signals to connect them to different modules, allowing direct link between the modules without CPU intervention.

Table 17.1 lists the ELC specifications, and Figure 17.1 shows a block diagram.

Table 17.1 ELC specifications

Item	Description
Event link function	162 types of event signals can be directly connected to modules. The ELC generates the ELC event signal, and events that activate the DTC.
Module-stop function	Module-stop state can be set
TrustZone Filter	Security attribution can be set for each registers

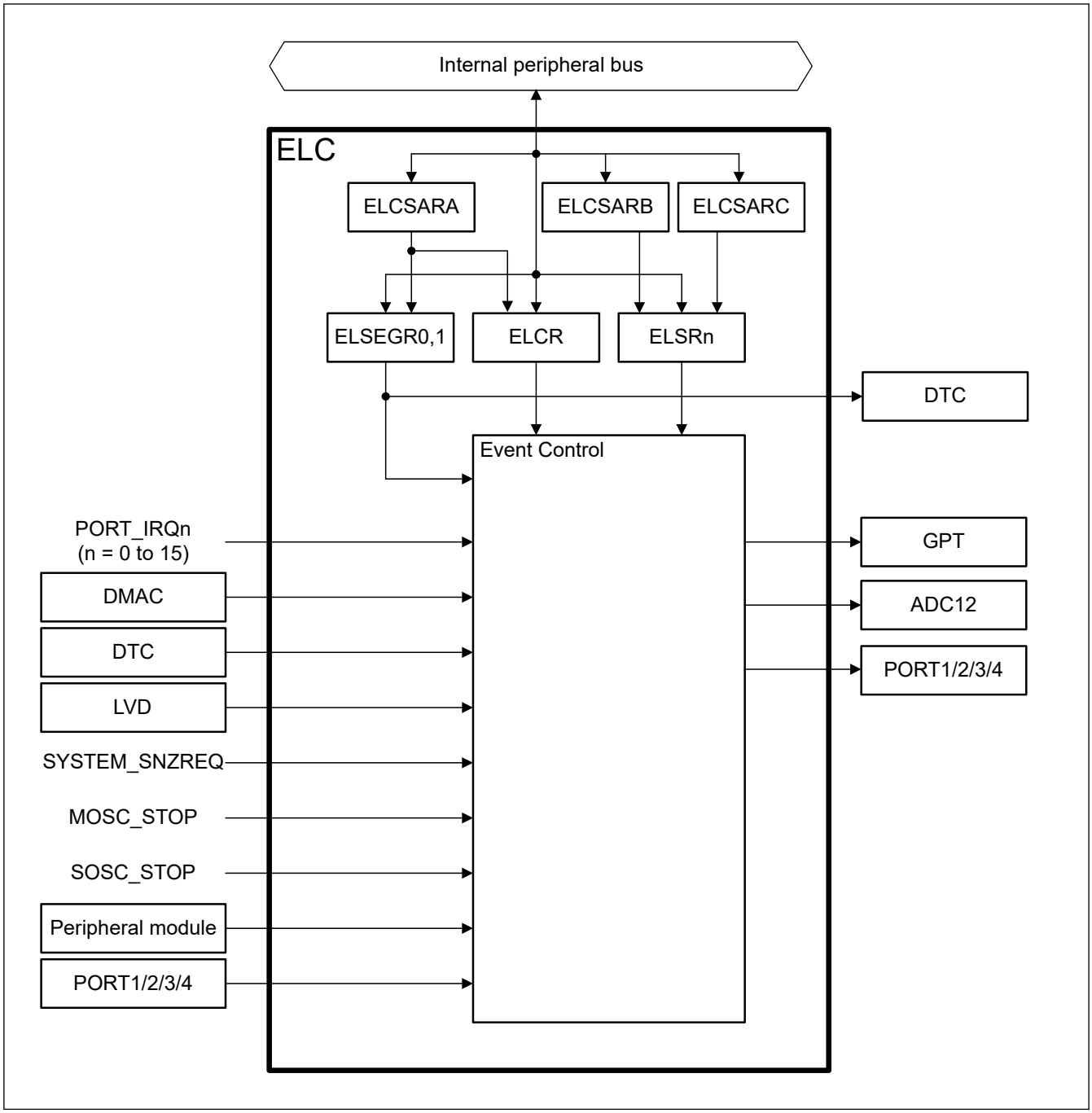

Figure 17.1 ELC block diagram

17.2 Register Descriptions

17.2.1 ELCR : Event Link Controller Register

Base address: ELC = 0x4008_2000

Offset address: 0x00

Bit position:	7	6	5	4	3	2	1	0
Bit field:	ELCON	—	—	—	—	—	—	—
Value after reset:	0	0	0	0	0	0	0	0

Bit	Symbol	Function	R/W
6:0	—	These bits are read as 0. The write value should be 0.	R/W
7	ELCON	All Event Link Enable 0: ELC function is disabled 1: ELC function is enabled	R/W

Note: If the security attribution is configured as Secure:
- Secure access and Non-secure read access are allowed
- Non-secure write access is ignored, and TrustZone access error is not generated.

If the security attribution is configured as Non-secure:
- Secure and Non-secure access are allowed.

The ELCR register controls the ELC operation.

17.2.2 ELSEGRn : Event Link Software Event Generation Register n (n = 0, 1)

Base address: ELC = 0x4008_2000

Offset address: 0x02 + 0x02 × n

Bit position:	7	6	5	4	3	2	1	0
Bit field:	WI	WE	—	—	—	—	—	SEG
Value after reset:	1	0	0	0	0	0	0	0

Bit	Symbol	Function	R/W
0	SEG	Software Event Generation 0: Normal operation 1: Software event is generated	W
5:1	—	These bits are read as 0. The write value should be 0.	R/W
6	WE	SEG Bit Write Enable 0: Write to SEG bit disabled 1: Write to SEG bit enabled	R/W
7	WI	ELSEGR Register Write Disable 0: Write to ELSEGR register enabled 1: Write to ELSEGR register disabled	W

Note: If the security attribution is configured as Secure:
- Secure access and Non-secure read access are allowed
- Non-secure write access is ignored, and TrustZone access error is not generated.

If the security attribution is configured as Non-secure:
- Secure and Non-secure access are allowed.

SEG bit (Software Event Generation)

When 1 is written to the SEG bit while the WE bit is 1, a software event is generated. This bit is read as 0. Even when 1 is written to this bit, data is not stored. The WE bit must be set to 1 before writing to this bit.

A software event can trigger a linked DTC event.

WE bit (SEG Bit Write Enable)

The SEG bit can only be written to when the WE bit is 1. Clear the WI bit to 0 before writing to this bit.

[Setting condition]

- If 1 is written to this bit while the WI bit is 0, this bit becomes 1.

[Clearing condition]

- If 0 is written to this bit while the WI bit is 0, this bit becomes 0.

WI bit (ELSEGR Register Write Disable)

The ELSEGR register can only be written to when the write value to the WI bit is 0. This bit is read as 1. Before setting the WE or SEG bit, the WI bit must be set to 0.

17.2.3 ELSRn : Event Link Setting Register n (n = 0 to 9, 14 to 17)

Base address: ELC = 0x4008_2000

Offset address: 0x10 + 0x04 × n

Bit position:	15	14	13	12	11	10	9	8	7	6	5	4	3	2	1	0
Bit field:	—	—	—	—	—	—	—	ELS[8:0]								
Value after reset:	0	0	0	0	0	0	0	0	0	0	0	0	0	0	0	0

Bit	Symbol	Function	R/W
8:0	ELS[8:0]	Event Link Select 0x000: Event output disabled for the associated peripheral module 0x001: Number setting for the event signal to be linked ⋮ 0x1E7: Number setting for the event signal to be linked Others: Settings prohibited	R/W
15:9	—	These bits are read as 0. The write value should be 0.	R/W

Note: If the security attribution is configured as Secure:
- Secure access and Non-secure read access are allowed
- Non-secure write access is ignored, and TrustZone access error is not generated.

If the security attribution is configured as Non-secure:
- Secure and Non-secure access are allowed.

The ELSRn register specifies an event signal to be linked to each peripheral module. Table 17.2 shows the association between the ELSRn register and the peripheral modules. Table 17.3 shows the association between the event signal names set in the ELSRn register and the signal numbers.

Table 17.2 Association between the ELSRn registers and peripheral functions

Register name	Peripheral function (module)	Event name
ELSR0	GPT (A)	ELC_GPTA
ELSR1	GPT (B)	ELC_GPTB
ELSR2	GPT (C)	ELC_GPTC
ELSR3	GPT (D)	ELC_GPTD
ELSR4	GPT (E)	ELC_GPTE
ELSR5	GPT (F)	ELC_GPTF
ELSR6	GPT (G)	ELC_GPTG
ELSR7	GPT (H)	ELC_GPTH
ELSR8	ADC12A0	ELC_AD00
ELSR9	ADC12B0	ELC_AD01
ELSR14	PORT1	ELC_PORT1
ELSR15	PORT2	ELC_PORT2
ELSR16	PORT3	ELC_PORT3
ELSR17	PORT4	ELC_PORT4

Table 17.3 Association between event signal names set in ELSRn.ELS[8:0] bits and signal numbers (1 of 5)

Event number	Interrupt request source	Name	Description
0x001	Port	PORT_IRQ0*1	External pin interrupt 0
0x002		PORT_IRQ1*1	External pin interrupt 1
0x003		PORT_IRQ2*1	External pin interrupt 2
0x004		PORT_IRQ3*1	External pin interrupt 3
0x005		PORT_IRQ4*1	External pin interrupt 4
0x006		PORT_IRQ5*1	External pin interrupt 5
0x007		PORT_IRQ6*1	External pin interrupt 6
0x008		PORT_IRQ7*1	External pin interrupt 7
0x009		PORT_IRQ8*1	External pin interrupt 8
0x00A		PORT_IRQ9*1	External pin interrupt 9
0x00B		PORT_IRQ10*1	External pin interrupt 10
0x00C		PORT_IRQ11*1	External pin interrupt 11
0x00D		PORT_IRQ12*1	External pin interrupt 12
0x00E		PORT_IRQ13*1	External pin interrupt 13
0x00F		PORT_IRQ14*1	External pin interrupt 14
0x010		PORT_IRQ15*1	External pin interrupt 15
0x020	DMAC	DMAC0_INT	DMAC transfer end 0
0x021		DMAC1_INT	DMAC transfer end 1
0x022		DMAC2_INT	DMAC transfer end 2
0x023		DMAC3_INT	DMAC transfer end 3
0x024		DMAC4_INT	DMAC transfer end 4
0x025		DMAC5_INT	DMAC transfer end 5
0x026		DMAC6_INT	DMAC transfer end 6
0x027		DMAC7_INT	DMAC transfer end 7
0x02A	DTC	DTC_DTCEND*4	DTC transfer end
0x038	LVD	LVD_LVD1	Voltage monitor 1 interrupt
0x039		LVD_LVD2	Voltage monitor 2 interrupt
0x03B	MOSC	MOSC_STOP	Mail Clock oscillation stop
0x03C	LPW	SYSTEM_SNZREQ*3 *4	Snooze entry
0x03D	SOSC	SOSC_STOP	Sub Clock oscillation stop
0x040	AGT0	AGT0_AGTI	AGT interrupt
0x041		AGT0_AGTCMAI	Compare match A
0x042		AGT0_AGTCMBI	Compare match B
0x043	AGT1	AGT1_AGTI	AGT interrupt
0x044		AGT1_AGTCMAI	Compare match A
0x045		AGT1_AGTCMBI	Compare match B
0x052	IWDT	IWDT_NMIUNDF	IWDT underflow
0x053	CWDT	WDT_NMIUNDF	WDT underflow
0x055	RTC	RTC_PRD	Periodic interrupt

Table 17.3 Association between event signal names set in ELSRn.ELS[8:0] bits and signal numbers (2 of 5)

Event number	Interrupt request source	Name	Description
0x073	IIC0	IIC0_RXI	Receive data full
0x074		IIC0_TXI	Transmit data empty
0x075		IIC0_TEI	Transmit end
0x076		IIC0_EEI	Transfer error
0x078	IIC1	IIC1_RXI	Receive data full
0x079		IIC1_TXI	Transmit data empty
0x07A		IIC1_TEI	Transmit end
0x07B		IIC1_EEI	Transfer error
0x08E	UARTA0	UARTA0_TXI	Transmission transfer end or buffer empty interrupt
0x08F		UARTA0_RXI	Reception transfer end
0x090		UARTA0_ERI	Reception communication error occurrence
0x091	UARTA1	UARTA1_TXI	Transmission transfer end or buffer empty interrupt
0x092		UARTA1_RXI	Reception transfer end
0x093		UARTA1_ERI	Reception communication error occurrence
0x0B1	I/O Port	IOPORT_GROUP1	Port 1 event
0x0B2		IOPORT_GROUP2	Port 2 event
0x0B3		IOPORT_GROUP3	Port 3 event
0x0B4		IOPORT_GROUP4	Port 4 event
0x0B5	ELC	ELC_SWEVT0	Software event 0
0x0B6		ELC_SWEVT1	Software event 1
0x0C0	GPT0	GPT0_CCMPA	Compare match A
0x0C1		GPT0_CCMPB	Compare match B
0x0C2		GPT0_CMPC	Compare match C
0x0C3		GPT0_CMPD	Compare match D
0x0C4		GPT0_CMPE	Compare match E
0x0C5		GPT0_CMPF	Compare match F
0x0C6		GPT0_OVF	Overflow
0x0C7		GPT0_UDF	Underflow
0x0C8		GPT0_PC	Cycle count function end
0x0C9	GPT1	GPT1_CCMPA	Compare match A
0x0CA		GPT1_CCMPB	Compare match B
0x0CB		GPT1_CMPC	Compare match C
0x0CC		GPT1_CMPD	Compare match D
0x0CD		GPT1_CMPE	Compare match E
0x0CE		GPT1_CMPF	Compare match F
0x0CF		GPT1_OVF	Overflow
0x0D0		GPT1_UDF	Underflow
0x0D1		GPT1_PC	Cycle count function end

Table 17.3 Association between event signal names set in ELSRn.ELS[8:0] bits and signal numbers (3 of 5)

Event number	Interrupt request source	Name	Description
0x0D2	GPT2	GPT2_CCMPA	Compare match A
0x0D3		GPT2_CCMPB	Compare match B
0x0D4		GPT2_CMPC	Compare match C
0x0D5		GPT2_CMPD	Compare match D
0x0D6		GPT2_CMPE	Compare match E
0x0D7		GPT2_CMPF	Compare match F
0x0D8		GPT2_OVF	Overflow
0x0D9		GPT2_UDF	Underflow
0x0DA		GPT2_PC	Cycle count function end
0x0DB	GPT3	GPT3_CCMPA	Compare match A
0x0DC		GPT3_CCMPB	Compare match B
0x0DD		GPT3_CMPC	Compare match C
0x0DE		GPT3_CMPD	Compare match D
0x0DF		GPT3_CMPE	Compare match E
0x0E0		GPT3_CMPF	Compare match F
0x0E1		GPT3_OVF	Overflow
0x0E2		GPT3_UDF	Underflow
0x0E3		GPT3_PC	Cycle count function end
0x0E4	GPT4	GPT4_CCMPA	Compare match A
0x0E5		GPT4_CCMPB	Compare match B
0x0E6		GPT4_CMPC	Compare match C
0x0E7		GPT4_CMPD	Compare match D
0x0E8		GPT4_CMPE	Compare match E
0x0E9		GPT4_CMPF	Compare match F
0x0EA		GPT4_OVF	Overflow
0x0EB		GPT4_UDF	Underflow
0x0EC		GPT4_PC	Cycle count function end
0x0ED	GPT5	GPT5_CCMPA	Compare match A
0x0EE		GPT5_CCMPB	Compare match B
0x0EF		GPT5_CMPC	Compare match C
0x0F0		GPT5_CMPD	Compare match D
0x0F1		GPT5_CMPE	Compare match E
0x0F2		GPT5_CMPF	Compare match F
0x0F3		GPT5_OVF	Overflow
0x0F4		GPT5_UDF	Underflow
0x150	GPT	GPT_UVWEDGE	UVW edge event
0x160	ADC12	ADC120_ADI	A/D scan end interrupt
0x164		ADC120_WCMPM*4	Compare match
0x165		ADC120_WCMPUM*4	Compare mismatch

Table 17.3 Association between event signal names set in ELSRn.ELS[8:0] bits and signal numbers (4 of 5)

Event number	Interrupt request source	Name	Description
0x180	SCI0	SCI0_RXI*2	Receive data full
0x181		SCI0_TXI*2	Transmit data empty
0x182		SCI0_TEI*2	Transmit end
0x183		SCI0_ERI	Receive error
0x184		SCI0_AM	Address match event
0x186	SCI1	SCI1_RXI*2	Received data full
0x187		SCI1_TXI*2	Transmit data empty
0x188		SCI1_TEI*2	Transmit end
0x189		SCI1_ERI	Receive error
0x192	SCI3	SCI3_RXI*2	Received data full
0x193		SCI3_TXI*2	Transmit data empty
0x194		SCI3_TEI*2	Transmit end
0x195		SCI3_ERI	Receive error
0x196		SCI3_AM	Address match event
0x198	SCI4	SCI4_RXI*2	Received data full
0x199		SCI4_TXI*2	Transmit data empty
0x19A		SCI4_TEI*2	Transmit end
0x19B		SCI4_ERI	Receive error
0x19C		SCI4_AM	Address match event
0x19E	SCI5	SCI5_RXI*2	Received data full
0x19F		SCI5_TXI*2	Transmit data empty
0x1A0		SCI5_TEI*2	Transmit end
0x1A1		SCI5_ERI	Receive error
0x1A2		SCI5_AM	Address match event
0x1B6	SCI9	SCI9_RXI*2	Received data full
0x1B7		SCI9_TXI*2	Transmit data empty
0x1B8		SCI9_TEI*2	Transmit end
0x1B9		SCI9_ERI	Receive error
0x1BA		SCI9_AM	Address match event
0x1C4	SPI0	SPI0_SPRI	Receive buffer full
0x1C5		SPI0_SPTI	Transmit buffer empty
0x1C6		SPI0_SPII	Idle
0x1C7		SPI0_SPEI	Error
0x1C8		SPI0_SPCEND	Communication complete event
0x1C9	SPI1	SPI1_SPRI	Receive buffer full
0x1CA		SPI1_SPTI	Transmit buffer empty
0x1CB		SPI1_SPII	Idle
0x1CC		SPI1_SPEI	Error
0x1CD		SPI1_SPCEND	Communication complete event

Table 17.3 Association between event signal names set in ELSRn.ELS[8:0] bits and signal numbers (5 of 5)

Event number	Interrupt request source	Name	Description
0x1D1	SPI2	SPI2_SPRI	Receive buffer full
0x1D2		SPI2_SPTI	Transmit buffer empty
0x1D3		SPI2_SPII	Idle
0x1D4		SPI2_SPEI	Error
0x1D5		SPI2_SPCEND	Communication complete event
0x1DB	DOC	DOC_DOPCI*4	Data operation circuit interrupt

Note 1. Only pulse (edge detection) is supported.
Note 2. This event is not supported in FIFO mode.
Note 3. ELSR8, ELSR9, ELSR14 to ELSR18 can select this event.
Note 4. This event can occur in Snooze mode.

17.2.4 ELCSARA : Event Link Controller Security Attribution Register A

Base address: ELC = 0x4008_2000

Offset address: 0x74

Bit position:	15	14	13	12	11	10	9	8	7	6	5	4	3	2	1	0
Bit field:	—	—	—	—	—	—	—	—	—	—	—	—	—	ELSEGR1	ELSEGR0	ELCR
Value after reset:	1	1	1	1	1	1	1	1	1	1	1	1	1	1	1	1

Bit	Symbol	Function	R/W
0	ELCR	Event Link Controller Register Security Attribution Target register: ELCR 0: Secure 1: Non-secure	R/W
1	ELSEGR0	Event Link Software Event Generation Register 0 Security Attribution 0: Secure 1: Non-secure	R/W
2	ELSEGR1	Event Link Software Event Generation Register 1 Security Attribution 0: Secure 1: Non-secure	R/W
15:3	—	These bits are read as 1. The write value should be 1.	R/W

Note: Only Secure access can write to this register. Both Secure access and Non-secure read access are allowed but Non-secure write access is not allowed and TrustZone access error is not generated.
Note: This register is write-protected by PRCR register.

The ELCR register controls operation of the ELC.

17.2.5 ELCSARB : Event Link Controller Security Attribution Register B

Base address: ELC = 0x4008_2000

Offset address: 0x78

Bit position:	15	14	13	12	11	10	9	8	7	6	5	4	3	2	1	0
Bit field:	ELSR[15:0]															
Value after reset:	1	1	1	1	1	1	1	1	1	1	1	1	1	1	1	1

Bit	Symbol	Function	R/W
15:0	ELSR[15:0]	Event Link Setting Register n Security Attribution Target register: ELSRn (n = 0 to 9, 14, 15) 0: Secure 1: Non-secure	R/W

Note: Only Secure access can write to this register. Both Secure access and Non-secure read access are allowed but Non-secure write access is not allowed and TrustZone access error is not generated.
Note: This register is write-protected by PRCR register.

This register specifies the security attribution for the Register ELSRn (n = 0 to 9, 14, 15).

17.2.6 ELCSARC : Event Link Controller Security Attribution Register C

Base address: ELC = 0x4008_2000

Offset address: 0x7C

Bit position:	15	14	13	12	11	10	9	8	7	6	5	4	3	2	1	0
Bit field:	—	—	—	—	—	—	—	—	—	—	—	—	—	—	ELSR[17:16]	
Value after reset:	1	1	1	1	1	1	1	1	1	1	1	1	1	1	1	1

Bit	Symbol	Function	R/W
1:0	ELSR[17:16]	Event Link Setting Register n Security Attribution (n = 16, 17) Target register: ELSRn (n = 16, 17) 0: Secure 1: Non-secure	R/W
15:2	—	These bits are read as 1. The write value should be 1.	R/W

Note: Only Secure access can write to this register. Both Secure access and Non-secure read access are allowed but Non-secure write access is not allowed and TrustZone access error is not generated.
Note: This register is write-protected by PRCR register.

This register specifies the security attribution for the Register ELSRn (n = 16, 17)

17.3 Operation

17.3.1 Relation between Interrupt Handling and Event Linking

Event number for an event link is the same as that for the associated interrupt source. For information on generating event signals, see the explanation in the chapter for each event source module.

17.3.2 Linking Events

When an event occurs and that event is already set as a trigger in the Event Link Setting Register (ELSRn), the associated module is activated. The operation of the module must be set up in advance. Table 17.4 lists the operations of modules when an event occurs.

Table 17.4 Module operations when event occurs (1 of 2)

Module	Operations When Event is Input
GPT	• Start counting • Stop counting • Clear counting • Up counting • Down counting • Input capture

Table 17.4 Module operations when event occurs (2 of 2)

Module	Operations When Event is Input
I/O Ports	• Change pin output based on the EORR (reset) or EOSR (set) • Latch pin state to EIDR • The following ports can be used for the ELC: Port 1 Port 2 Port 3 Port 4
ADC12	Start A/D conversion
DTC	Start DTC data transfer

17.3.3 Example of Procedure for Linking Events

To link events:

1. Set the operation of the module for which an event is to be linked.
2. Set the appropriate ELSRn.ELS[8:0] bits for the module to be linked.
3. Set the ELCR.ELCON bit to 1 to enable linkage of all events.
4. Configure the module from which an event is output and activate the module. The link between the two modules is now active.
5. To stop event linkage of modules individually, set 0 to the ELSRn.ELS[8:0] bit associated with the modules. To stop linkage of all the events, set the ELCR.ELCON bit to 0.

If event link output from the RTC is to be used, set the ELC after the RTC settings, for example, for initialization and time setting. Unintended events may be generated if RTC settings are made after the ELC settings.

If event link output from the LVD is to be used, set the ELC after setting the LVD. To disable the LVD, do so after setting 0x00 to the associated ELSRn register.

17.4 Usage Notes

17.4.1 Linking DMAC/DTC Transfer End Signals as Events

When linking the DMAC/DTC transfer end signals as events, do not set the same peripheral module as the DMAC/DTC transfer destination and event link destination. If set, the peripheral module might be started before DMAC/DTC transfer to the peripheral module is complete.

17.4.2 Setting Clocks

To link events, you must enable the ELC and the related modules. The modules cannot operate if the related modules are in the module-stop state or in low power mode in which the module is stopped (Software Standby mode).

Some modules can perform in Snooze mode. For more information, see Table 17.3 and section 10, Low Power Modes.

17.4.3 Module-Stop Function Setting

The Module Stop Control Register C (MSTPCRC) can enable or disable ELC operation. The ELC is initially stopped after reset. Releasing the module-stop state enables access to the registers. The ELCON bit must be set to 0 before disabling ELC operation using the Module Stop Control Register. For more information, see Table 17.3 and section 10, Low Power Modes.

17.4.4 ELC Delay Time

In Figure 17.2, module A accesses module B through the ELC. There is a delay time in the ELC between module A and module B. Table 17.5 shows the ELC delay time.

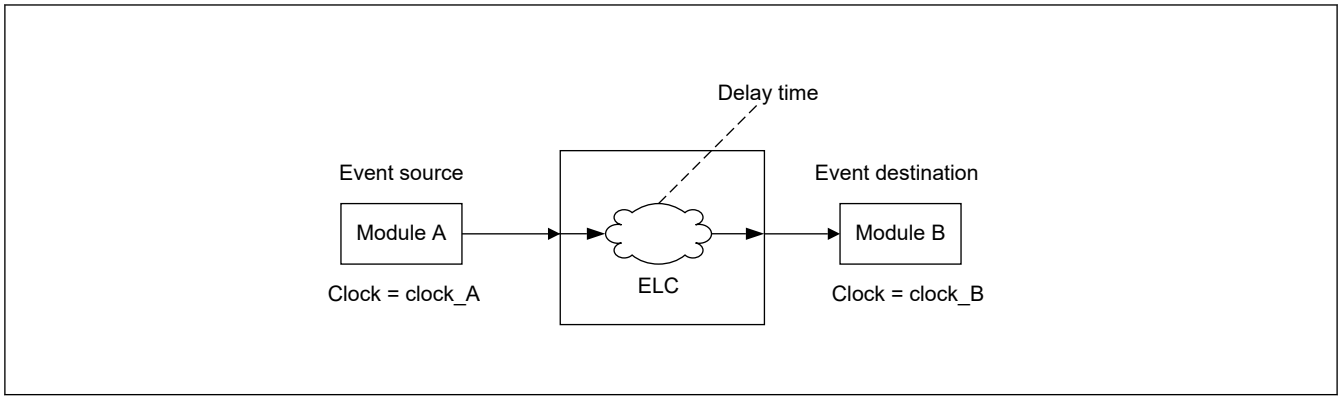

Figure 17.2 ELC delay time

Table 17.5 ELC delay time

Clock domain	Clock frequency	ELC delay time
clock_A = clock_B	clock_A = clock_B	0 cycle
clock_A ≠ clock_B	clock_A = clock_B	1 cycle to 2 cycles
	clock_A > clock_B	1 cycle to 2 cycles of clock_B
	clock_A < clock_B	1 cycle to 2 cycles of clock_A

18. I/O Ports

18.1 Overview

The I/O port pins operate as general I/O port pins, I/O pins for peripheral modules, interrupt input pins, analog I/O, port group function for the ELC.

All pins operate as input pins immediately after a reset, and pin functions are switched by register settings. The I/O ports and peripheral modules for each pin are specified in the associated registers.

Figure 18.1 shows a connection diagram for the I/O port registers. The configuration of the I/O ports differs for different packages. Table 18.1 lists the I/O port specifications by package, and Table 18.2 lists the port functions.

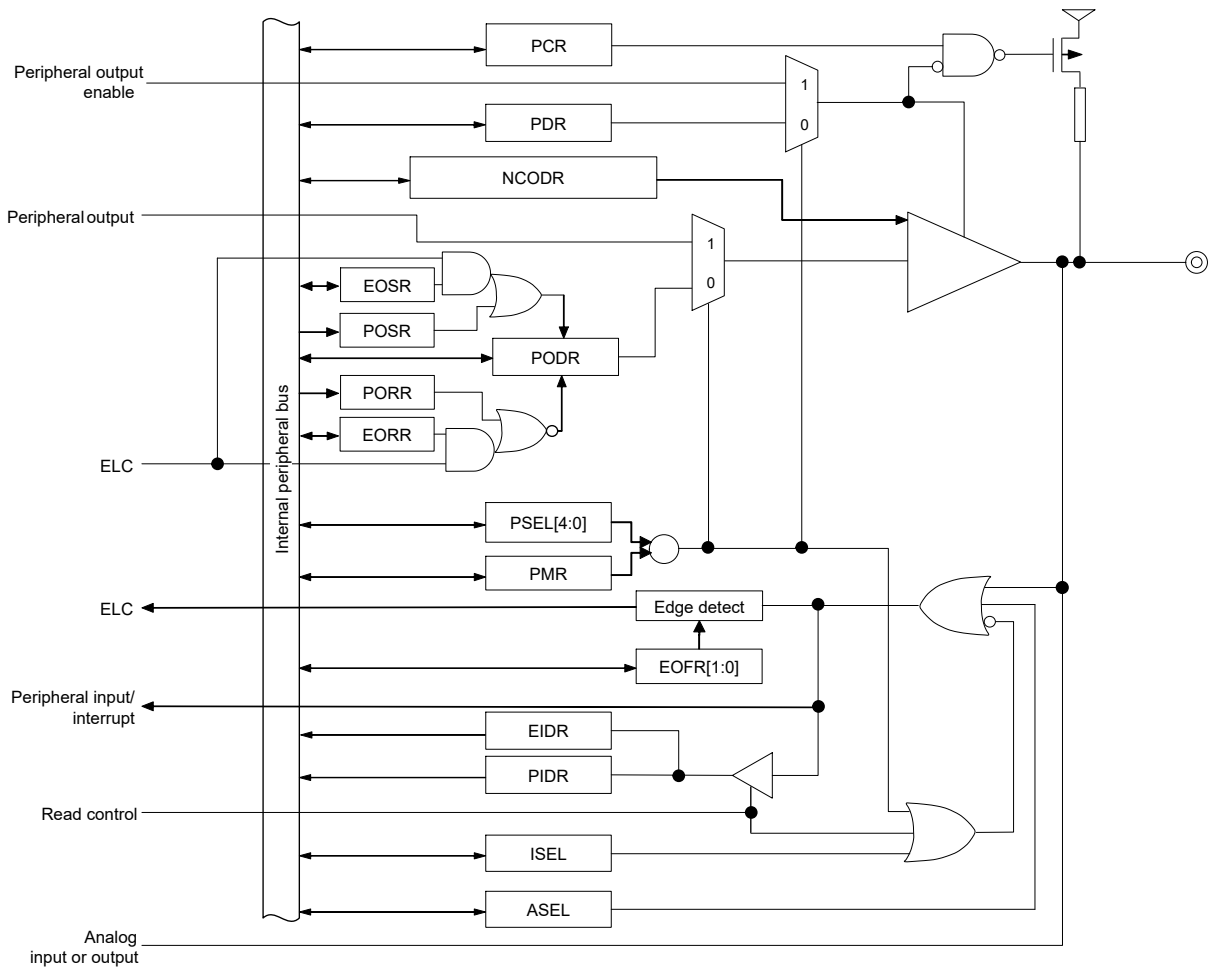

Note: This figure shows a basic port configuration. The configuration differs depending on the ports.

Figure 18.1 Connection diagram for I/O port registers

Table 18.1 I/O port specifications (1 of 2)

Port	Package		Package	
	100 pins	Number of pins	64 pins	Number of pins
Port0	P000 to P004, P010, P011	7	P000 to P004, P010, P011	7
Port1	P100 to P115	16	P100 to P106, P108 to P113	13
Port2	P200, P201, P204 to P215	14	P200, P201, P205 to P208, P212 to P215	10

Table 18.1 I/O port specifications (2 of 2)

Port	Package		Package	
	100 pins	Number of pins	64 pins	Number of pins
Port3	P300 to P307	8	P300 to P304	5
Port4	P400 to P405, P407 to P415	15	P400, P401, P407 to P411	7
Port5	P500 to P513	14	P500, P506 to P509	5
Port6	P600 to P602, P608 to P610	6	—	0
Port7	P708	1	—	0
Port8	P814, P815	2	P814, P815	2

Table 18.2 I/O port functions

Port	Port name	Input pull-up	Input mode switching	Open-drain output	5V tolerant	I/O
Port0	P000 to P004, P010, P011	✓	—	—	—	Input / Output
Port1	P100, P101	✓	✓	✓	—	Input / Output
	P102 to P115	✓	—	✓	—	Input / Output
Port2	P200, P214, P215	—	—	—	—	Input
	P201, P204 to P213	✓	—	✓	—	Input / Output
Port3	P300, P303 to P307	✓	—	✓	—	Input / Output
	P301, P302	✓	✓	✓	✓	Input / Output
Port4	P400, P401	✓	✓	✓	✓	Input / Output
	P402 to P405, P407 to P415	✓	—	✓	—	Input / Output
Port5	P500 to P513	✓	—	✓	—	Input / Output
Port6	P600 to P602, P608 to P610	✓	—	✓	—	Input / Output
Port7	P708	✓	—	✓	—	Input / Output
Port8	P814, P815	✓	—	✓	—	Input / Output

Note: ✓: Available
—: Setting prohibited

18.2 Register Descriptions

18.2.1 PCNTR1/PODR/PDR : Port Control Register 1

Base address: PORTm = 0x4001_F000 + 0x0020 × m (m = 0 to 8)

Offset address: 0x000 (PCNTR1/PODR)
0x002 (PDR)

Bit position:	31	30	29	28	27	26	25	24	23	22	21	20	19	18	17	16
Bit field:	PODR15	PODR14	PODR13	PODR12	PODR11	PODR10	PODR09	PODR08	PODR07	PODR06	PODR05	PODR04	PODR03	PODR02	PODR01	PODR00
Value after reset:	0	0	0	0	0	0	0	0	0	0	0	0	0	0	0	0

Bit position:	15	14	13	12	11	10	9	8	7	6	5	4	3	2	1	0
Bit field:	PDR15	PDR14	PDR13	PDR12	PDR11	PDR10	PDR09	PDR08	PDR07	PDR06	PDR05	PDR04	PDR03	PDR02	PDR01	PDR00
Value after reset:	0	0	0	0	0	0	0	0	0	0	0	0	0	0	0	0

Bit	Symbol	Function	R/W
15:0	PDR15 to PDR00	Pmn Direction 0: Input (functions as an input pin) 1: Output (functions as an output pin)	R/W*1
31:16	PODR15 to PODR00	Pmn Output Data 0: Low output 1: High output	R/W*2

Note: m = 0 to 8, n = 00 to 15

Note 1. If the security attribution is configured as Secure:
- Secure access and Non-secure read access are allowed
- Non-secure write access is ignored and TrustZone access error is not generated.

If the security attribution is configured as Non-secure:
- Secure and Non-secure access are allowed.

Note 2. If the security attribution is configured as Secure:
- Secure access is allowed
- Non-secure read value is 0 and TrustZone access error is not generated
- Non-secure write access is ignored and TrustZone access error is not generated.

If the security attribution is configured as Non-secure:
- Secure and Non-secure access are allowed.

The Port Control Register 1 (PCNTR1/PODR/PDR) is a 32-bit or 16-bit read/write register that controls port direction and port output data. The PCNTR1 specifies the port direction and output data, and is accessed in 32-bit units. The PDRn (bits [15:0] in PCNTR1) and PODRn (bits [31:16] in PCNTR1) respectively, are accessed in 16-bit units.

PDRn bits (Pmn Direction)

The PDRn bits select the input or output direction for individual pins on the associated port when the pins are configured as general I/O pins. Each pin on port m is associated with a PORTm.PCNTR1.PDRn bit. The I/O direction can be specified in 1-bit unit. Bits associated with non-existent pins are reserved. Reserved bits are read as 0. The write value should be 0. In the case of input only ports, PDRn bits are reserved. See Table 18.2. The PDRn bit in the PORTm.PCNTR1 register serves the same function as the PDR bit in the PFS.PmnPFS register.

PODRn bits (Pmn Output Data)

The PODRn bits hold data to be output from the general I/O pins. Bits of non-existent port m are reserved. Reserved bits are read as 0. The write value should be 0. In the case of input only ports, PODRn bits are reserved. See Table 18.2. The PODRn bit in the PORTm.PCNTR1 register serves the same function as the PODR bit in the PFS.PmnPFS register.

18.2.2 PCNTR2/EIDR/PIDR : Port Control Register 2

Base address: PORTm = 0x4001_F000 + 0x0020 × m (m = 0 to 8)

Offset address: 0x004 (PCNTR2/EIDR)
0x006 (PIDR)

Bit position:	31	30	29	28	27	26	25	24	23	22	21	20	19	18	17	16
Bit field:	EIDR15	EIDR14	EIDR13	EIDR12	EIDR11	EIDR10	EIDR09	EIDR08	EIDR07	EIDR06	EIDR05	EIDR04	EIDR03	EIDR02	EIDR01	EIDR00
Value after reset:	0	0	0	0	0	0	0	0	0	0	0	0	0	0	0	0

Bit position:	15	14	13	12	11	10	9	8	7	6	5	4	3	2	1	0
Bit field:	PIDR15	PIDR14	PIDR13	PIDR12	PIDR11	PIDR10	PIDR09	PIDR08	PIDR07	PIDR06	PIDR05	PIDR04	PIDR03	PIDR02	PIDR01	PIDR00
Value after reset:	x	x	x	x	x	x	x	x	x	x	x	x	x	x	x	x

Bit	Symbol	Function	R/W
15:0	PIDR15 to PIDR00	Pmn State 0: Low level 1: High level	R
31:16	EIDR15 to EIDR00 *2	Port Event Input Data*1 When an ELC_PORTx signal occurs 0: Low input 1: High input	R

Note: If the security attribution is configured as Secure:
- Secure read access is allowed
- Non-secure read value is 0 and TrustZone access error is not generated.

If the security attribution is configured as Non-secure:
- Secure and Non-secure read access are allowed.

Note: m = 0 to 8, n = 00 to 15
Note 1. x = 1, 2, 3 or 4 for EIDR only
Note 2. Supported by ports 1, 2, 3 or 4.

The Port Control Register 2 (PCNTR2/EIDR/PIDR) allows read access to the Pmn state and the port event input data using 32-bit or 16-bit access.

The PCNTR2 represents the Pmn state and the port event input data, and is accessed in 32-bit units.

The PIDRn (bits [15:0] in PCNTR2) and EIDRn (bits [31:16] in PCNTR2) respectively, are accessed in 16-bit units. Bits associated with non-existent pins are reserved. Reserved bits are read as undefined.

PIDRn bits (Pmn State)

The PIDRn bits reflect the individual pin states of the port, regardless of the values set in PmnPFS.PMR and PORTm.PCNTR1.PDRn. The PIDRn bit in the PORTm.PCNTR2 register serves the same function as the PIDR bit in the PFS.PmnPFS register.

A pin state cannot be reflected in PIDRn when one of the following functions is enabled:

- Main clock oscillator (MOSC)
- Sub-clock oscillator (SOSC)
- Analog function (ASEL = 1)
- Segment LCD Controller (SLCDC)

EIDRn bits (Port Event Input Data)

The EIDRn bits latch a pin state when an ELC_PORTx signal occurs. Pin states can only be input to EIDRn when PmnPFS.PMR and PORTm.PCNTR1.PDRn are 0. When the PmnPFS.ASEL bit is set to 1, the associated pin state is not reflected in EIDRn.

18.2.3 PCNTR3/PORR/POSR : Port Control Register 3

Base address: PORTm = 0x4001_F000 + 0x0020 × m (m = 0 to 8)

Offset address: 0x008 (PCNTR3/PORR)
0x00A (POSR)

Bit position:	31	30	29	28	27	26	25	24	23	22	21	20	19	18	17	16
Bit field:	PORR 15	PORR 14	PORR 13	PORR 12	PORR 11	PORR 10	PORR 09	PORR 08	PORR 07	PORR 06	PORR 05	PORR 04	PORR 03	PORR 02	PORR 01	PORR 00
Value after reset:	0	0	0	0	0	0	0	0	0	0	0	0	0	0	0	0

Bit position:	15	14	13	12	11	10	9	8	7	6	5	4	3	2	1	0
Bit field:	POSR 15	POSR 14	POSR 13	POSR 12	POSR 11	POSR 10	POSR 09	POSR 08	POSR 07	POSR 06	POSR 05	POSR 04	POSR 03	POSR 02	POSR 01	POSR 00
Value after reset:	0	0	0	0	0	0	0	0	0	0	0	0	0	0	0	0

Bit	Symbol	Function	R/W
15:0	POSR15 to POSR00	Pmn Output Set 0: No effect on output 1: High output	W
31:16	PORR15 to PORR00	Pmn Output Reset 0: No effect on output 1: Low output	W

Note: If the security attribution is configured as Secure:
- Secure write access is allowed
- Non-secure write access is ignored and TrustZone access error is not generated.

If the security attribution is configured as Non-secure:
- Secure and Non-secure write access are allowed.

Note: m = 0 to 8, n = 00 to 15

The Port Control Register 3 (PCNTR3/PORR/POSR) is a 32-bit or 16-bit write register that controls the setting or resetting of the port output data.

The PCNTR3 controls the setting or resetting of the port output data, and is accessed in 32-bit units.

The POSRn (bits [15:0] in PCNTR3) and the PORRn (bits [31:16] in PCNTR3) respectively, are accessed in 16-bit units.

POSRn bits (Pmn Output Set)

POSR changes PODR when set by a software write. For example, for P100, when PORT1.PCNTR3.POSR00 = 1, PORT1.PCNTR1.PODR00 outputs 1. Bits associated with non-existent pins are reserved. The write value should always be 0. In the case of input only ports, POSRn bits are reserved. See Table 18.2.

PORRn bits (Pmn Output Reset)

PORR changes PODR when reset by a software write. For example, for P100, when PORT1.PCNTR3.PORR00 = 1, PORT1.PCNTR1.PODR00 outputs 0. Bits associated with non-existent pins are reserved. The write value should always be 0. In the case of input only ports, PORRn bits are reserved. See Table 18.2.

Note: When EORRn or EOSRn is set, writing is prohibited to PODRn, PORRn, and POSRn.
Note: PORRn and POSRn should not be set at the same time.

18.2.4 PCNTR4/EORR/EOSR : Port Control Register 4

Base address: PORTm = 0x4001_F000 + 0x0020 × m (m = 1 to 4)

Offset address: 0x00C (PCNTR4/EORR)
0x00E (EOSR)

Bit position:	31	30	29	28	27	26	25	24	23	22	21	20	19	18	17	16
Bit field:	EORR 15	EORR 14	EORR 13	EORR 12	EORR 11	EORR 10	EORR 09	EORR 08	EORR 07	EORR 06	EORR 05	EORR 04	EORR 03	EORR 02	EORR 01	EORR 00
Value after reset:	0	0	0	0	0	0	0	0	0	0	0	0	0	0	0	0

Bit position:	15	14	13	12	11	10	9	8	7	6	5	4	3	2	1	0
Bit field:	EOSR 15	EOSR 14	EOSR 13	EOSR 12	EOSR 11	EOSR 10	EOSR 09	EOSR 08	EOSR 07	EOSR 06	EOSR 05	EOSR 04	EOSR 03	EOSR 02	EOSR 01	EOSR 00
Value after reset:	0	0	0	0	0	0	0	0	0	0	0	0	0	0	0	0

Bit	Symbol	Function	R/W
15:0	EOSR15 to EOSR00	Pmn Event Output Set When an ELC_PORTx signal occurs 0: No effect on output 1: High output	R/W
31:16	EORR15 to EORR0	Pmn Event Output Reset When an ELC_PORTx signal occurs 0: No effect on output 1: Low output	R/W

Note: If the security attribution is configured as Secure:
- Secure access is allowed
- Non-secure read value is 0 and TrustZone access error is not generated
- Non-secure write access is ignored and TrustZone access error is not generated.

If the security attribution is configured as Non-secure:
- Secure and Non-secure access are allowed.

Note: m = 1 to 4, n = 00 to 15, x = 1 to 4

The Port Control Register 4 (PCNTR4/EORR/EOSR) is a 32-bit or 16-bit read/write register that controls the setting or resetting of the port output data by an event input from the ELC.

The PCNTR4 controls the setting or resetting of the port output data by an event input from the ELC, and is accessed in 32-bit units.

The EOSRn (bits [15:0] in PCNTR4) and EORRn (bits [31:16] in PCNTR4) respectively, are accessed in 16-bit units.

EOSRn bits (Pmn Event Output Set)

EOSR changes PODR when set because an ELC_PORTx signal occurs. For example, for P100 if PORT1.PCNTR4.EOSR00 is set to 1 when the ELC_PORTx occurs, PORT1.PCNTR1.PODR00 outputs 1. Bits associated with non-existent pins are reserved. The write value should always be 0. For input only ports, EOSRn bits are reserved. See Table 18.2.

EORRn bits (Pmn Event Output Reset)

EORR changes PODR when reset because an ELC_PORTx signal occurs. For example, for P100 if PORT1.PCNTR4.EORR00 = 1 when the ELC_PORTx occurs, PORT1.PCNTR1.PODR00 outputs 0. Bits associated with non-existent pins are reserved. The write value should always be 0. For input only ports, EORRn bits are reserved. See Table 18.2.

Note: When EORRn or EOSRn is set, writing is prohibited to PODRn, PORRn, and POSRn.

Note: EORRn and EOSRn should not be set at the same time.

18.2.5 PmnPFS/PmnPFS_HA/PmnPFS_BY : Port mn Pin Function Select Register (m = 0 to 8, n = 00 to 15)

Base address: PFS = 0x4001_F800

Offset address: 0x000 + 0x040 × m + 0x004 × n (PmnPFS)
0x002 + 0x040 × m + 0x004 × n (PmnPFS_HA)
0x003 + 0x040 × m + 0x004 × n (PmnPFS_BY)

Bit position:	31	30	29	28	27	26	25	24	23	22	21	20	19	18	17	16
Bit field:	—	—	—	PSEL[4:0]					—	—	—	—	—	—	—	PMR
Value after reset:	0	0	0	0	0	0	0	0	0	0	0	0	0	0	0	0*1

Bit position:	15	14	13	12	11	10	9	8	7	6	5	4	3	2	1	0
Bit field:	ASEL	ISEL	EOFR[1:0]		—	—	—	—	—	NCODR	—	PCR	—	PDR	PIDR	PODR
Value after reset:	0	0	0	0	0	0	0	0	0	0	0	0*1	0	0	x	0

Bit	Symbol	Function	R/W
0	PODR	Port Output Data 0: Low output 1: High output	R/W*3
1	PIDR	Pmn State 0: Low level 1: High level	R*4
2	PDR	Port Direction 0: Input (functions as an input pin) 1: Output (functions as an output pin)	R/W*5
3	—	This bit is read as 0. The write value should be 0.	R/W
4	PCR	Pull-up Control 0: Disable input pull-up 1: Enable input pull-up	R/W*5
5	—	This bit is read as 0. The write value should be 0.	R/W
6	NCODR	N-Channel Open-Drain Control 0: CMOS output 1: NMOS open-drain output	R/W*5
11:7	—	These bits are read as 0. The write value should be 0.	R/W
13:12	EOFR[1:0]	Event on Falling/Event on Rising*2 0 0: Don't care 0 1: Detect rising edge 1 0: Detect falling edge 1 1: Detect both edges	R/W*5

Bit	Symbol	Function	R/W
14	ISEL	IRQ Input Enable 0: Not used as an IRQn input pin 1: Used as an IRQn input pin	R/W*5
15	ASEL	Analog Input Enable 0: Not used as an analog pin 1: Used as an analog pin	R/W*5
16	PMR	Port Mode Control 0: Used as a general I/O pin 1: Used as an I/O port for peripheral functions	R/W*5
23:17	—	These bits are read as 0. The write value should be 0.	R/W
28:24	PSEL[4:0]	Peripheral Select These bits select the peripheral function. For individual pin functions, see the associated tables in this chapter.	R/W*5
31:29	—	These bits are read as 0. The write value should be 0.	R/W

Note 1. The initial value of P108, P201 and P300 is not 0x0000_0000. P108 is 0x0001_0010, P201 is 0x0000_0010, and P300 is 0x0001_0010.
Note 2. Supported by PORTn (n = 1 to 4).
Note 3. If the security attribution is configured as Secure:
- Secure access is allowed
- Non-secure read value is 0 and TrustZone access error is not generated
- Non-secure write access is ignored and TrustZone access error is not generated.

If the security attribution is configured as Non-secure:
- Secure and Non-secure access are allowed.

Note 4. If the security attribution is configured as Secure:
- Secure read access is allowed
- Non-secure read value is 0 and TrustZone access error is not generated.

If the security attribution is configured as Non-secure:
- Secure and Non-secure read access are allowed.

Note 5. If the security attribution is configured as Secure:
- Secure access and Non-secure read access are allowed
- Non-secure write access is ignored and TrustZone access error is not generated.

If the security attribution is configured as Non-secure:
- Secure and Non-secure access are allowed.

Port mn Pin Function Select Register (PmnPFS/PmnPFS_HA/PmnPFS_BY) is a 32-bit, 16-bit, or 8-bit read/write control register that selects the port mn pin function, and is accessed in 32-bit units. PmnPFS_HA (PmnPFS [15:0] bits) is accessed in 16-bit units. PmnPFS_BY (PmnPFS[7:0] bits) is accessed in 8-bit units.

The available Port mn pin depends on the product. For details, see Table 18.1

PODR bit (Port Output Data), PIDR bit (Port State), PDR bit (Port Direction)

The PDR, PIDR, and PODR bits serve the same function as the PCNTR. When these bits are read, the PCNTR value is read.

PCR bit (Pull-up Control)

The PCR bit enables or disables an input pull-up resistor on the individual port pins. When a pin is in the input state with the associated bit in PmnPFS.PCR set to 1, the pull-up resistor connected to the pin is enabled. When a pin is set as a general port output pin, or a peripheral function output pin, the pull-up resistor for the pin is disabled regardless of the PCR setting. The pull-up resistor is also disabled in the reset state. Bits associated with non-existent pins are reserved. Reserved bits are read as 0. The write value should be 0.

NCODR bit (N-Channel Open-Drain Control)

The NCODR bit specifies the output type for the port pins. Bits associated with non-existent pins are reserved. Reserved bits are read as 0. The write value should be 0.

EOFR[1:0] bits (Event on Falling/Event on Rising)

The EOFR[1:0] bits select the edge detection method for the port group input signal. These bits support rising, falling, or both edge detections. When the EOFR[1:0] bits are set to 01b, 10b, or 11b, the input enable of the I/O cell is asserted. Following that, the event pulse is input from the external pin, and the GPIO outputs the event pulse to the ELC. Bits associated with non-existent pins are reserved. Reserved bits are read as 0. The write value should be 0.

ISEL bit (IRQ Input Enable)

The ISEL bit specifies IRQ input pins. This setting can be used in combination with the peripheral functions, although an IRQn (external pin interrupt) of the same number must only be enabled for one pin. The ISEL bit for an unspecified IRQn is reserved.

ASEL bit (Analog Input Enable)

The ASEL bit specifies analog pins. When a pin is set as an analog pin by this bit:

1. Specify it as a general I/O port in the Port Mode Control bit (PmnPFS.PMR).
2. Disable the pull-up resistor in the Pull-up Control bit (PmnPFS.PCR).
3. Specify the input in the Port Direction bit (PmnPFS.PDR). The pin state cannot be read at this point. The PmnPFS register is protected by the Write-Protect Register (PWPR). Release write-protect before modifying the register.

The ASEL bit for an unspecified analog I/O pin is reserved.

PMR bit (Port Mode Control)

The PMR bit specifies the port pin function. Bits associated with non-existent pins are reserved. The write value should be 0.

PSEL[4:0] bits (Peripheral Select)

The PSEL[4:0] bits assign the peripheral function.

18.2.6 PWPR : Write-Protect Register

Base address: PFS = 0x4001_F800

Offset address: 0x503

Bit position:	7	6	5	4	3	2	1	0
Bit field:	B0WI	PFSWE	—	—	—	—	—	—
Value after reset:	1	0	0	0	0	0	0	0

Bit	Symbol	Function	R/W
5:0	—	These bits are read as 0. The write value should be 0.	R/W
6	PFSWE	PmnPFS Register Write Enable 0: Writing to the PmnPFS register is disabled 1: Writing to the PmnPFS register is enabled	R/W
7	B0WI	PFSWE Bit Write Disable 0: Writing to the PFSWE bit is enabled 1: Writing to the PFSWE bit is disabled	R/W

PFSWE bit (PmnPFS Register Write Enable)

Writing to the PmnPFS register is enabled only when the PFSWE bit is set to 1. You must first write 0 to the B0WI bit before setting PFSWE to 1.

B0WI bit (PFSWE Bit Write Disable)

Writing to the PFSWE bit is enabled only when the B0WI bit is set to 0.

18.2.7 PWPRS : Write-Protect Register for Secure

Base address: PFS = 0x4001_F800

Offset address: 0x505

Bit position:	7	6	5	4	3	2	1	0
Bit field:	B0WI	PFSWE	—	—	—	—	—	—
Value after reset:	1	0	0	0	0	0	0	0

Bit	Symbol	Function	R/W
5:0	—	These bits are read as 0. The write value should be 0.	R/W
6	PFSWE	PmnPFS Register Write Enable 0: Disable writes to the PmnPFS register 1: Enable writes to the PmnPFS register	R/W
7	B0WI	PFSWE Bit Write Disable 0: Enable writes the PFSWE bit 1: Disable writes to the PFSWE bit	R/W

Note: Only Secure access can write to this register. Both Secure access and Non-secure read access are allowed but Non-secure write access is not allowed and TrustZone access error is not generated.

Note: This register is write-protected by PRCR register.

PFSWE bit (PmnPFS Register Write Enable)

Writing to the PmnPFS register of the IO port pin set as secure by the PmSAR register is enabled only when the PFSWE bit is set to 1. You must first write 0 to the B0WI bit before setting PFSWE to 1.

B0WI bit (PFSWE Bit Write Disable)

Writing to the PFSWE bit is enabled only when the B0WI bit is set to 0.

18.2.8 PRWCNTR : Set Wait Control Register

Base address: PFS = 0x4001_F800

Offset address: 0x50C

Bit position:	7	6	5	4	3	2	1	0
Bit field:	—	—	—	—	WAIT[3:0]			
Value after reset:	0	0	0	0	0	0	0	1

Bit	Symbol	Function	R/W
3:0	WAIT[3:0]	Wait Cycle Control Bit The WAIT bits specify the number of wait cycles for accessing the PRCNT2 and PFS registers, and reading the port pin state by ELC event. 0x0: Setting prohibited 0x1: insert wait cycle 1 0x2: insert wait cycle 2 0x3: insert wait cycle 3 0x4: insert wait cycle 4 0x5: insert wait cycle 5 0x6: insert wait cycle 6 0x7: insert wait cycle 7 0x8: insert wait cycle 8 0x9: insert wait cycle 9 0xA: insert wait cycle 10 0xB: insert wait cycle 11 0xC: insert wait cycle 12 0xD: insert wait cycle 13 0xE: insert wait cycle 14 0xF: insert wait cycle 15	R/W

Bit	Symbol	Function	R/W
7:4	—	These bits are read as 0. The write value should be 0.	R/W

Note: This register is write-protected by PSAR register.

18.2.9 PmSAR : Port Security Attribution Register (m = 0 to 8)

Base address: PFS = 0x4001_F800

Offset address: 0x510 + 0x002 × m

Bit position:	15	14	13	12	11	10	9	8	7	6	5	4	3	2	1	0
Bit field:	PMNSA[15:0]															
Value after reset:	1	1	1	1	1	1	1	1	1	1	1	1	1	1	1	1

Bit	Symbol	Function	R/W
15:0	PMNSA[15:0]	Pmn Security Attribution Target I/O port pin : Pmn 0: Secure 1: Non-secure	R/W

Note: Only Secure access can write to this register. Both Secure access and Non-secure read access are allowed but Non-secure write access is not allowed and TrustZone access error is not generated.
Note: This register is write-protected by PRCR register.
Note: m = 0 to 8, n = 00 to 15

Port Security Attribution Register is a 16-bit register that setting the Security Attribution of the each port, the registers are accessed only in 16-bit units.

PMNSA[15:0] bits (Pmn Security Attribution)

The PmnSA bit specifies the Security Attribution of Pmn.

18.2.10 PSAR : PORT Security Attribution Register

Base address: PFS = 0x4001_F800

Offset address: 0x540

Bit position:	15	14	13	12	11	10	9	8	7	6	5	4	3	2	1	0
Bit field:	—	—	—	—	—	—	—	—	—	—	—	—	—	—	—	PORTSA0
Value after reset:	1	1	1	1	1	1	1	1	1	1	1	1	1	1	1	1

Bit	Symbol	Function	R/W
0	PORTSA0	PRWCNTR Security Attribution 0: Secure 1: NonSecure	R/W
15:1	—	These bits are read as 0. The write value should be 1.	R/W

Note: Only Secure access can write to this register. Both Secure access and Non-secure read access are allowed but Non-secure write access is not allowed and TrustZone access error is not generated.
Note: This register is write-protected by PRCR register.

Port Security Attribution Register is a 16-bit register that setting the Security Attribution of the PRWCNTR, the registers are accessed only in 16-bit units.

18.3 Operation

18.3.1 General I/O Ports

All pins except P108 and P300 operate as general I/O ports after reset. General I/O ports are organized as 16 bits per port and can be accessed by port with the Port Control Registers (PCNTRn, where n = 1 to 4), or by individual pins with the Port mn Pin Function Select register. For details on these registers, see section 18.2. Register Descriptions.

Each port has the following bits:

- Port Security Attribution register (PmSAR)(m = 0 to 8), which indicates the security attribution.
- Port Direction bit (PDRn), which selects input or output direction
- Port Output Data bit (PODRn), which holds data for output
- Port Input Data bit (PIDRn), which indicates the pin states
- Event Input Data bit (EIDRn), which indicates the pin state when an ELC_PORTn (n = 1, 2, 3 or 4) signal occurs
- Port Output Set bit (POSRn), which indicates the output value when a software write occurs
- Port Output Reset bit (PORRn), which indicates the output value when a software write occurs
- Event Output Set bit (EOSRn), which indicates the output value when an ELC_PORTn (n = 1, 2, 3 or 4) signal occurs
- Event Output Reset bit (EORRn), which indicates the output value when an ELC_PORTn (n = 1, 2, 3 or 4) signal occurs.

18.3.2 Port Function Select

The following port functions are available for configuring each pin:

- Security function: Security attribution for each pins
- I/O configuration: CMOS output or NMOS open-drain output, and pull-up control
- General I/O port: Port direction, output data setting, and read input data
- Alternate function: Configured function mapping to the pin.

Each pin is associated with a Port mn Pin Function Select register (PmnPFS), which includes the associated PODR, PIDR, and PDR bits. In addition, the PmnPFS register includes the following:

- PCR: Pull-up resistor control bit that turns the input pull-up MOS on or off
- NCODR: N-channel open-drain control bit that selects the output type for each pin
- EOFR[1:0]: For selecting the edge of the event that input from the port group
- ISEL: IRQ input enable bit to specify an IRQ input pin
- ASEL: Analog input enable bit to specify an analog pin
- PMR: Port mode bit to specify the pin function of each port
- PSEL[4:0]: Port function select bits to select the associated peripheral function.

These configurations can be made by a single-register access to the Port mn Pin Function Select register. For details, see section 18.2.5. PmnPFS/PmnPFS_HA/PmnPFS_BY : Port mn Pin Function Select Register (m = 0 to 8, n = 00 to 15).

18.3.3 Port Group Function for ELC

In the MCU, Port 1 to Port 4 are assigned for the ELC port group function.

18.3.3.1 Behavior When ELC_PORTn (n = 1, 2, 3 or 4) is Input from ELC

The MCU supports the two functions described in this section when an ELC_PORTn (n = 1, 2, 3 or 4) signal comes from the ELC.

(1) Input to EIDR

For the GPI function (PDR = 0 and PMR = 0 in the PmnPFS register), when an ELC_PORTn (n = 1, 2, 3 or 4) signal comes from the ELC, the input enable of the I/O cell is asserted, and data from the external pins is read into the EIDR bit. See Figure 18.2

For the GPO function (PDR = 1) or the peripheral mode (PMR = 1), 0 is input into the EIDR bit from the external pins.

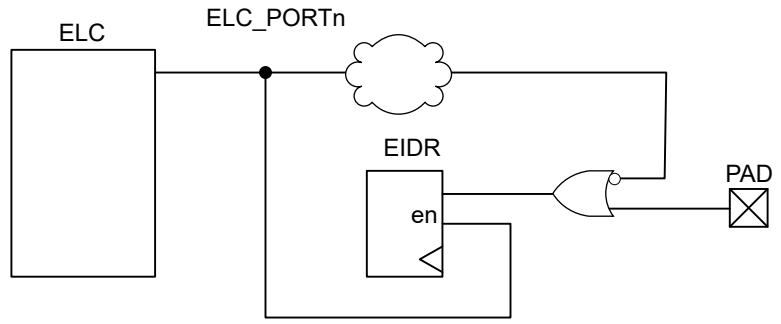

Note: n = 1, 2, 3 or 4

Figure 18.2 Event ports input data

(2) Output from PODR by EOSR and EORR

When an ELC_PORTn (n = 1, 2, 3 or 4) signal occurs, the data is output from the PODR to the external pin based on the settings in the EOSR and EORR registers.

- If EOSR is set to 1, when an ELC_PORTn (n = 1, 2, 3 or 4) signal occurs, the PODR register outputs 1 to the external pin. Otherwise, when EOSR = 0, the PODR value is retained.
- If EORR is set to 1, when ELC_PORTn (n = 1, 2, 3 or 4) signal occurs, the PODR register outputs 0 to the external pin. Otherwise, when EORR = 0, the PODR value is retained.

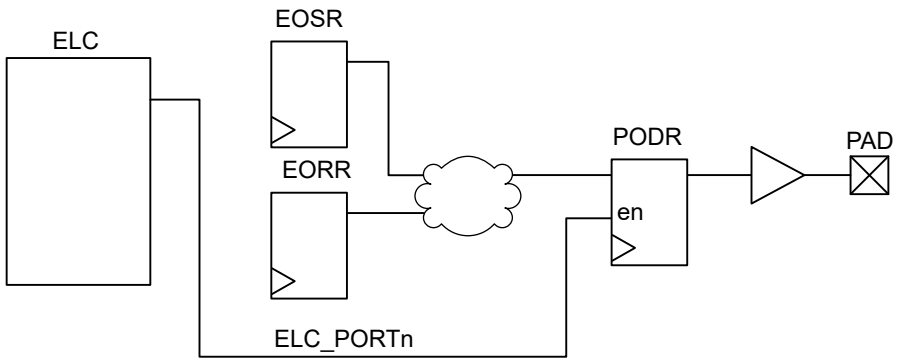

Note: n = 1, 2, 3 or 4

Figure 18.3 Event ports output data

18.3.3.2 Behavior When an Event Pulse is Output to ELC

To output the event pulse from the external pins to the ELC, set the EOFR[1:0] bits in the PmnPFS register. For details, see section 18.2.5. PmnPFS/PmnPFS_HA/PmnPFS_BY : Port mn Pin Function Select Register (m = 0 to 8, n = 00 to 15). When the EOFR[1:0] bits are set, the input enable of the I/O cell is asserted.

Data from the external pin is the input. For example, for Port 1, when the data is input from P100 to P115, the data of those 16 pins is organized by OR logic. This data is formed into a one-shot pulse that goes to the ELC. The operation of Port n (n = 2 to 4) is also the same as Port 1. See Figure 18.4.

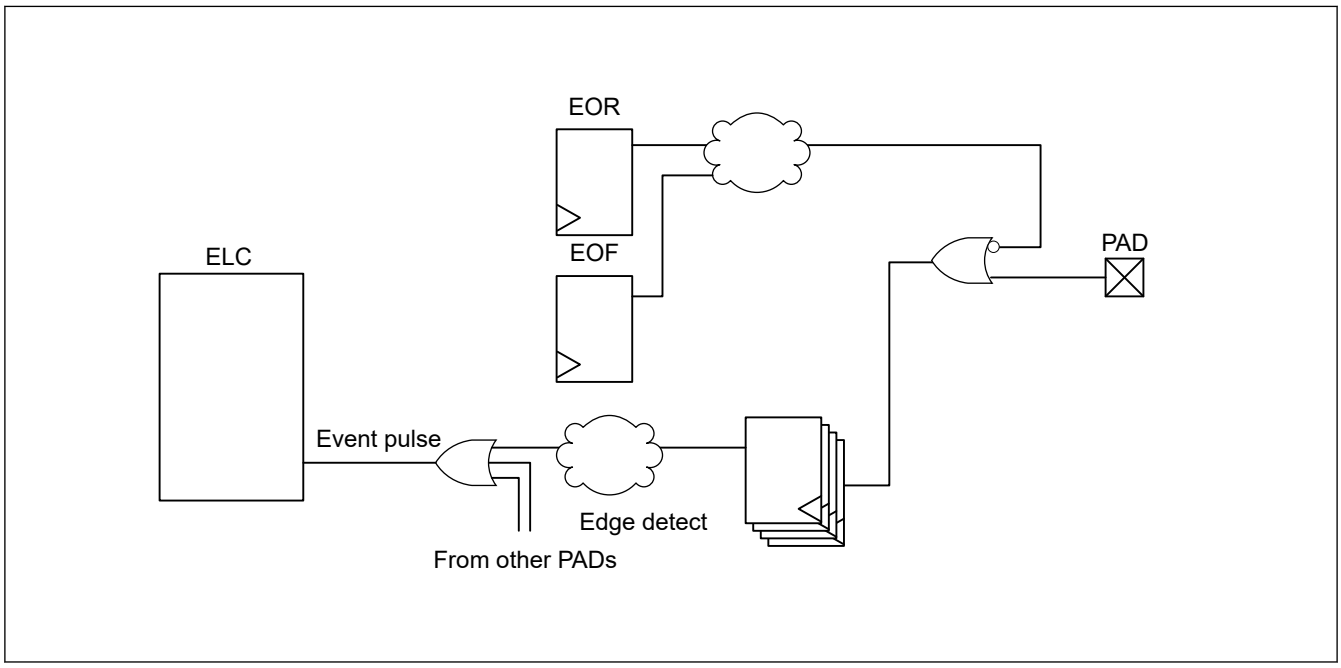

Figure 18.4 Generation of event pulse

18.3.4 Wait Function for Port Read

Wait cycles for reading the port input data can be set in the PRWCNTR.WAIT[3:0] bits as follows:

- Read port input data (PIDR) by reading the PRCNT2 or PFS register.
- Latch port pin state to Event Input Data Register (EIDR) when an ELC_PORT1 to 4 signal occurs.

The number of access cycles is the value in PRWCNTR.WAIT[3:0] plus 1. For example, if PRWCNTR.WAIT[3:0] is set as 0010b, then the wait is 2 cycles, and access is 3 clock cycles.

Table 18.3 shows the relationship of voltage, frequency, and wait cycles.

Table 18.3 Relationship between voltage, frequency, and wait cycles

VCC = AVCC0	Access cycles*1	Wait cycles*2
More than 2.7 V	4 to 16	3 to 15
2.4 to 2.7 V	5 to 16	4 to 15
1.8 to 2.4 V	8 to 16	7 to 15
1.6 to 1.8 V	2 to 16	1 to 15

Note 1. Bus latency is not included
Note 2. Number of wait cycles to set in Set Wait Control Register (PRWCNTR).

18.4 Handling of Unused Pins

Table 18.4 shows how to handle unused pins.

Table 18.4 Handling of unused pins

Pin name	Description
P201/MD	Use as a mode selection pin
RES	Connect to VCC through a resistor (pulling up)
P200/NMI	Connect to VCC through a resistor (pulling up)
P212/EXTAL	When the main clock oscillator is not used, set the MOSCCR.MOSTP bit to 1 (general port P212). When this pin is not used as port P212, configure it in the same way as ports 1 to 8.
P213/XTAL	When the main clock oscillator is not used, set the MOSCCR.MOSTP bit to 1 (general port P213). When the external clock is input to the EXTAL pin, the XTAL pin functions as P213. When this pin is not used as port P213, configure it in the same way as ports 1 to 8.
P215/XCIN	When the sub-clock oscillator is not used, set the SOSCCR.SOSTP bit to 1 (general port P215). When this pin is not used as port P215, configure it in the same way as ports 1 to 8.
P214/XCOUT	When the sub-clock oscillator is not used, set the SOSCCR.SOSTP bit to 1 (general port P214). When this pin is not used as port P214, configure it in the same way as ports 1 to 8.
P0xx	• If the direction is set to input (PCNTR1.PDRn = 0), connect the associated pin to AVCC0 (pulled up) through a resistor or to AVSS0 (pulled down) through a resistor.*1 • If the direction is set to output (PCNTR1.PDRn = 1), keep pin open.*1
P1x to P8x	• If the direction is set to input (PCNTR1.PDRn = 0), connect the associated pin to VCC (pulled up) through a resistor or to VSS (pulled down) through a resistor.*1*2 • If the direction is set to output (PCNTR1.PDRn = 1), keep pin open.*1
VREFH0	Connect to AVCC0
VREFL0	Connect to AVSS0
RTCIC0	Connect to VSS through a resistor.
VRTC	Directly connect to VSS.

Note 1. Clear the PmnPFS.PMR, PmnPFS.ISEL, PmnPFS.PCR, and PmnPFS.ASEL bits to 0.
Note 2. P108, P201, and P300 should be enabled for input pull-up from the initial value (PmnPFS.PCR = 1).

18.5 Usage Notes

18.5.1 Procedure for Specifying the Pin Functions

To specify the I/O pin functions:

1. Clear the B0WI bit in the PWPR register. This enables writing to the PFSWE bit in the PWPR register.*1
2. Set 1 to the PFSWE bit in the PWPR register. This enables writing to the PmnPFS register.*1
3. Clear the Port Mode Control bit in the PMR to 0 for the target pin to select the general I/O port.
4. Specify the I/O function for the pin through the PSEL[4:0] bits settings in the PmnPFS register.
5. Set the PMR bit to 1 as required to switch to the selected I/O function for the pin.
6. Clear the PFSWE bit in the PWPR register. This disables writing to the PmnPFS register.*1
7. Set 1 to the B0WI bit in the PWPR register. This disables writing to the PFSWE bit in the PWPR register.*1

Note 1. When the security attribution of Pmn is set to 0, set the PWPRS register to write to the PmnPFS register.

18.5.2 Procedure for Using Port Group Input

To use the port group input (port n (n = 1 to 4)):

1. Set the ELSRx.ELS[8:0] bits to all 0 to ignore unexpected pulses. For more information, see section 17, Event Link Controller (ELC).
2. Set the EOFR[1:0] bits of the PmnPFS register to specify the rising, falling, or both edge detections.
3. Execute a dummy read or wait for a short time, for example 100 ns. Ignoring of unexpected pulses depends on the initial value of the external pin.
4. Set the ELSRx.ELS[8:0] bits to enable the event signals.

18.5.3 Port Output Data Register (PODR) Summary

This register outputs data as follows:

1. Outputs 0 if PCNTR4.EORR is set to 1 when ELC_PORTn (n = 1, 2, 3 or 4) signal occurs.
2. Outputs 1 if PCNTR4.EOSR is set to 1 when ELC_PORTn (n = 1, 2, 3 or 4) signal occurs.
3. Outputs 0 if PCNTR3.PORR is set to 1.
4. Outputs 1 if PCNTR3.POSR is set to 1.
5. Outputs 0 or 1 because PCNTR1.PODRn is set.
6. Outputs 0 or 1 because PmnPFS.PODRn is set.

Numbers in this list correspond to the priority for writing to the PODRn. For example, if 1. and 3. from the list occur at the same time, the higher priority event 1. is executed.

18.5.4 Notes on Using Analog Functions

To use an analog function, set the Port Mode Control bit (PMR) and the Port Direction bit (PDRn) to 0 so that the pin acts as a general input port. Next, set the Analog Input Enable bit (ASEL) in the Port mn Pin Function Select Register (PmnPFS.ASEL) to 1.

18.5.5 Notes on Using EXLVD Functions

When using P509/EXLVD as EXLVD function, set the Port Mode Control bit (P509PFS.PMR) and the Port Direction bit (P509PFS.PDR) to 0 so that the pin acts as a general input port. If P509 is read with an intermediate potential input to the EXLVD pin, a through current might occur in the input buffer of P509 at the timing of the read access. Also, the read value of P509 might be undefined. Therefore, when using EXLVD function, avoid reading P5xx all at once using PORT5.PCNTR5/PIDR register and access each port individually using PmnPFS register.

18.5.6 Notes on Using EXLVDVBAT Functions

When using P508/EXLVDVBAT as EXLVDVBAT function, set the Port Mode Control bit (P508PFS.PMR) and the Port Direction bit (P508PFS.PDR) to 0 so that the pin acts as a general input port. If P508 is read with an intermediate potential input to the EXLVDVBAT pin, a through current might occur in the input buffer of P508 at the timing of the read access. Also, the read value of P508 might be undefined. Therefore, when using EXLVDVBAT function, avoid reading P5xx all at once using PORT5.PCNTR5/PIDR register and access each port individually using PmnPFS register.

18.6 Peripheral Select Settings for Each Product

This section describes the pin function select configuration using the PmnPFS register. Some pin names have added _A, _B, _C, or _D suffixes. When assigning IIC, SPI functionality, select the functional pins having the same suffix. The other pins can be selected regardless of the suffix. Assigning the same function to two or more pins simultaneously is prohibited.

1. In Pmn pin function select register(PmnPFS), the PSEL bits have to be set when the PMR bit of the target pin is 0. If the PSEL bits are set when the PMR bit is 1, the unexpected edges may be input at the input function or the unexpected pulses may be output to the external pin at the output function.
2. Only the allowed values (functions) should be specified in the PSEL bits of PmnPFS register. If a value which is not allowed for the register is specified, the correct operation is not guaranteed.
3. The single function should not be assigned to the multiple pins by PmnPFS register. When the GPT1, GPT5, SCI3, IIC0, and SPI0 are configured as secure and these pin function is being assigned to the pin which security attribution is set as secure by the PmSAR register, the write access to the PSEL bits for setting same function as secure pin in other pins is ignored when the security attribution of that pin is non-secure. For example, if the PSARE.PSARE30 bit is 0 (GPT1 is secure) and the P109PFS.PSEL bits is 00011b (pin function is GTIOC1A) and the P1SAR.109SA bit is 0 (P109 is secure), the write 00011b to the P405PFS.PSEL bits is ignored when the P4SAR.P405SA bit is 1 (P405 is non-secure).
4. The PORT0 and 5 have the analog functions such as A/D converter. When these pins are used as an analog function, for avoiding the loss of resolution, the PMR bit should be set to 0 and PDR bit should be set to 0. After that, ASEL bit should be set to 1

Table 18.5 Register settings for input/output pin function (PORT0)

PSEL[4:0] settings	Function	Pin						
		P000	P001	P002	P003	P004	P010	P011
00000b (value after reset)	Hi-z/SWD	Hi-z						
ASEL bit		AN005	AN006	AN000	AN001	AN002	AN003/VREFH0	AN004/VREFL0
ISEL bit		IRQ6	IRQ7	IRQ8	—	IRQ9	IRQ10	IRQ11
PCR bit	Pull-up	✓	✓	✓	✓	✓	✓	✓
NCODR bit	Nch-OD	—	—	—	—	—	—	—
100-pin		✓	✓	✓	✓	✓	✓	✓
64-pin		✓	✓	✓	✓	✓	✓	✓

✓: Available
—: Setting prohibited

Table 18.6 Register settings for input/output pin function (PORT1)

PSEL[4:0] settings	Function	Pin															
		P100	P101	P102	P103	P104	P105	P106	P107	P108	P109	P110	P111	P112	P113	P114	P115
00000b (value after reset)	Hi-z/SWD	Hi-z								SWDIO	Hi-z						
00001b	AGT	AGTIO0	AGTEE0	AGTO0	—	—	—	AGTOB0	AGTOA0	—	—	—	—	—	AGTIO1	—	—
00010b	GPT	GTETRGA	GTETRGB	GTOWLO	GTOWUP	GTETRGB	GTETRGA	GTETRGD	—	GTOULO	GTOVUP	GTOVLO	—	—	—	—	—
00011b	GPT	GTIOC5B	GTIOC5A	—	—	GTIOC1B	GTIOC1A	—	—	GTIOC0B	GTIOC1A	GTIOC1B	—	—	—	—	GTIOC4A
00100b	SCI	RXD0/SCL0/MISO0	TXD0/SDA0/MOSI0	SCK0	CTS_RTS0/SS0	—	—	—	—	—	—	—	—	—	—	—	—
00101b	SCI	—	—	RXD3/SCL3/MISO3	TXD3/SDA3/MOSI3	SCK3	CTS_RTS3/SS3	CTS3	—	CTS_RTS9/SS9	TXD9/SDA9/MOSI9	RXD9/SCL9/MISO9	SCK9	CTS_RTS9/SS9	—	CTS9	TXD1/SDA1/MOSI1/TXDX1/SIOX1
00110b	SPI[*1]	MISOC_A	MOSIC_A	RSPCKC_A	SSLC0_A	SSLC1_A	SSLC2_A	SSLC3_A	—	SSLA0_B	MOSIA_B	MISOA_B	RSPCKA_B	SSLA0_B	—	—	—
00111b	IIC[*1]	SDA0_B	SCL0_B	—	—	—	—	—	—	—	—	—	—	—	—	—	—
01001b	RTC/CLKOUT	—	—	—	—	—	—	—	—	—	CLKOUT	—	—	—	—	—	—
01010b	CAC/ADC12	—	—	ADTRG0	—	—	—	—	—	—	—	—	—	—	—	—	—
01101b	SLCDC	SEG41	SEG40	SEG39	SEG38	SEG37	SEG36	SEG35	SEG34	SEG24	COM4/SEG0	COM5/SEG1	COM6/SEG2	COM7/SEG3	SEG25	SEG26	SEG27
10000b	CANFD	—	—	CTX0	CRX0	—	—	—	—	—	—	—	—	—	—	—	—
10001b	QSPI	QIO1	QIO0	QIO3	QIO2	QSPCLK	—	—	—	—	—	—	—	QSSL	—	—	—
ASEL bit		—	—	—	—	—	—	—	—	—	—	—	—	—	—	—	—
ISEL bit		IRQ2	IRQ1	—	—	IRQ1	IRQ0	—	—	—	—	IRQ3	IRQ4	—	IRQ10	—	—
PCR bit	Pull-up	✓	✓	✓	✓	✓	✓	✓	✓	✓	✓	✓	✓	✓	✓	✓	✓
NCODR bit	Nch-OD	✓	✓	✓	✓	✓	✓	✓	✓	✓	✓	✓	✓	✓	✓	✓	✓
100-pin		✓	✓	✓	✓	✓	✓	✓	✓	✓	✓	✓	✓	✓	✓	✓	✓
64-pin		✓	✓	✓	✓	✓	✓	✓	—	✓	✓	✓	✓	✓	✓	—	—

✓: Available
—: Setting prohibited

Note 1. Recommend using pins that have a letter appended to their names, for instance "_A" or "_B", to indicate group membership. For the interface, the AC portion of the electrical characteristics is measured for each group.

Table 18.7 Register settings for input/output pin function (PORT2) (1 of 2)

PSEL[4:0] settings	Function	Pin													
		P200	P201	P204	P205	P206	P207	P208	P209	P210	P211	P212	P213	P214	P215
00000b (value after reset)	Hi-z/SWD	Hi-z													
00001b	AGT	—	—	—	AGTO1	—	—	—	—	—	—	AGTEE1	—	—	—
00010b	GPT	—	—	GTIU	GTIV	GTIU	—	GTOVLO	GTOVUP	GTIW	GTIV	GTETRGD	GTETRGC	—	—
00011b	GPT	—	—	—	GTIOC4A	GTIOC3B	GTIOC3A	—	—	—	—	GTIOC0B	GTIOC0A	—	—
00100b	SCI	—	—	CTS_RTS4/SS4	SCK4	RXD4/SCL4/MISO4	TXD4/SDA4/MOSI4	—	—	—	—	RXD0/SCL0/MISO0	TXD0/SDA0/MOSI0	—	—

Table 18.7 Register settings for input/output pin function (PORT2) (2 of 2)

PSEL[4:0] settings	Function	Pin													
		P200	P201	P204	P205	P206	P207	P208	P209	P210	P211	P212	P213	P214	P215
00110b	SPI*1	—	—	SSLA0_A	—	—	—	—	RSPCKA_A	MISOA_A	MOSIA_A	—	—	—	—
01001b	RTC/CLKOUT	—	—	—	CLKOUT	—	—	—	—	—	—	—	—	—	—
01101b	SLCDC	—	—	SEG14	COM0	—	—	COM1	SEG17	SEG16	SEG15	—	—	—	—
10001b	QSPI	—	—	QSPCLK	—	—	QSSL	QIO3	QIO2	QIO1	QIO0	—	—	—	—
ASEL bit		—	—	—	—	—	—	—	—	—	—	—	—	—	—
ISEL bit		NMI*2	—	—	IRQ1	IRQ0	—	IRQ12	—	—	—	IRQ3	IRQ2	—	—
PCR bit	Pull-up	—	✓	✓	✓	✓	✓	✓	✓	✓	✓	✓	✓	—	—
NCODR bit	Nch-OD	—	✓	✓	✓	✓	✓	✓	✓	✓	✓	✓	✓	—	—
100-pin		✓	✓	✓	✓	✓	✓	✓	✓	✓	✓	✓	✓	✓	✓
64-pin		✓	✓	—	✓	✓	✓	✓	—	—	—	✓	✓	✓	✓

✓: Available
—: Setting prohibited

Note 1. Recommend using pins that have a letter appended to their names, for instance "_A" or "_B", to indicate group membership. For the interface, the AC portion of the electrical characteristics is measured for each group.

Note 2. When using NMI pin interrupt, Port related registers setting are not required.

Table 18.8 Register settings for input/output pin function (PORT3)

PSEL[4:0] settings	Function	Pin							
		P300	P301	P302	P303	P304	P305	P306	P307
00000b (value after reset)	Hi-z/SWD	SWCLK	Hi-z						
00001b	AGT	—	AGTIO0	—	—	—	—	—	—
00010b	GPT	GTOUUP	GTOULO	GTOUUP	—	GTOWLO	GTOWUP	GTOULO	GTOUUP
00011b	GPT	GTIOC0A	GTIOC4B	GTIOC4A	GTIOC3B	GTIOC3A	—	—	—
00101b	SCI	CTS5	RXD5/SCL5/MISO5	TXD5/SDA5/MOSI5	SCK5	CTS_RTS5/SS5	—	—	—
00110b	SPI*1	SSLA1_B	SSLA2_B	SSLA3_B	—	—	—	—	—
00111b	IIC*1	—	SDA0_A	SCL0_A	—	—	—	—	—
01010b	CAC/ADC12	—	—	ADTRG0	—	—	—	—	—
01101b	SLCDC	SEG23	SEG22	SEG21	COM3	COM2	SEG20	SEG19	SEG18
10110b	UARTA	—	—	—	—	CLKA0	RxDA0	TxDA0	—
ASEL bit		—	—	—	—	—	—	—	—
ISEL bit		—	IRQ6	IRQ5	—	IRQ9	IRQ8	—	—
PCR bit	Pull-up	✓	✓	✓	✓	✓	✓	✓	✓
NCODR bit	Nch-OD	✓	✓	✓	✓	✓	✓	✓	✓
100-pin		✓	✓	✓	✓	✓	✓	✓	✓
64-pin		✓	✓	✓	✓	✓	—	—	—

✓: Available
—: Setting prohibited

Note 1. Recommend using pins that have a letter appended to their names, for instance "_A" or "_B", to indicate group membership. For the interface, the AC portion of the electrical characteristics is measured for each group.

Table 18.9 Register settings for input/output pin function (PORT4) (1 of 2)

PSEL[4:0] settings	Function	Pin														
		P400	P401	P402	P403	P404	P405	P407	P408	P409	P410	P411	P412	P413	P414	P415
00000b (value after reset)	Hi-z/SWD	Hi-z														
00001b	AGT	AGTIO1	—	AGTIO0/AGTIO1	AGTIO0/AGTIO1	AGTIO0/AGTIO1	—	AGTIO0	—	—	AGTOB1	AGTOA1	AGTEE1	—	—	—
00010b	GPT	GTETRGB	GTETRGA	GTETRGC	—	—	—	—	GTOWLO	GTOWUP	GTOVLO	GTOVUP	GTOULO	GTOUUP	—	—
00011b	GPT	GTIOC2A	GTIOC2B	—	—	GTIOC1B	GTIOC1A	GTIOC2A	GTIOC2B	—	—	—	—	—	GTIOC0B	GTIOC0A
00100b	SCI	—	—	—	—	—	—	CTS4	CTS_RTS4/SS4	—	—	—	—	—	—	—
00101b	SCI	TXD1/SDA1/MOSI1/TXDX1/SIOX1	RXD1/SCL1/MISO1/RXDX1	CTS_RTS1/SS1	SCK1	TXD5/SDA5/MOSI5	RXD5/SCL5/MISO5	—	RXD3/SCL3/MISO3	TXD3/SDA3/MOSI3	SCK3	CTS_RTS3/SS3	CTS3	—	—	—

Table 18.9 Register settings for input/output pin function (PORT4) (2 of 2)

PSEL[4:0] settings	Function	Pin														
		P400	P401	P402	P403	P404	P405	P407	P408	P409	P410	P411	P412	P413	P414	P415
00110b	SPI*1	—	—	—	—	—	—	—	RSPCKB_A	MISOB_A	MOSIB_A	SSLB0_A	SSLB1_A	SSLB2_A	SSLB3_A	—
00111b	IIC*1	SCL1_A	SDA1_A	—	—	—	—	—	—	—	—	—	—	—	—	—
01001b	RTC/CLKOUT	—	—	—	—	—	—	RTCOUT	—	—	—	—	—	—	—	—
01010b	CAC/ADC12	—	—	CACREF	—	—	—	ADTRG0	—	—	—	—	—	—	—	—
01101b	SLCDC	SEG4	SEG5	SEG6	SEG7	SEG23	SEG24	SEG13	VL3	VL4	VL2	VL1	SEG12	SEG11	SEG10	SEG9
10000b	CANFD	—	CRX0	CTX0	—	—	—	—	—	—	—	—	—	—	—	—
ASEL bit		—	—	—	—	—	—	—	—	—	—	—	—	—	—	—
ISEL bit		IRQ0	IRQ5	IRQ4	IRQ14	IRQ15	—	—	IRQ7	IRQ6	IRQ5	IRQ4	—	—	IRQ9	IRQ8
PCR bit	Pull-up	✓	✓	✓	✓	✓	✓	✓	✓	✓	✓	✓	✓	✓	✓	✓
NCODR bit	Nch-OD	✓	✓	✓	✓	✓	✓	✓	✓	✓	✓	✓	✓	✓	✓	✓
100-pin		✓	✓	✓	✓	✓	✓	✓	✓	✓	✓	✓	✓	✓	✓	✓
64-pin		✓	✓	—	—	—	—	✓	✓	✓	✓	✓	—	—	—	—

✓: Available
—: Setting prohibited

Note 1. Recommend using pins that have a letter appended to their names, for instance "_A" or "_B", to indicate group membership. For the interface, the AC portion of the electrical characteristics is measured for each group.

Table 18.10 Register settings for input/output pin function (PORT5)

PSEL[4:0] settings	Function	Pin													
		P500	P501	P502	P503	P504	P505	P506	P507	P508	P509	P510	P511	P512	P513
00000b (value after reset)	Hi-z/SWD	Hi-z													
00001b	AGT	AGTOA0	AGTOB0	—	—	—	—	—	—	—	—	—	—	—	—
00010b	GPT	GTIU	GTIV	GTIW	GTETRGC	GTETRGD	—	—	—	—	—	—	—	—	—
00011b	GPT	—	—	—	—	—	—	GTIOC4A	GTIOC4B	—	—	—	—	—	—
00100b	SCI	CTS0	—	—	—	—	—	—	—	—	—	—	—	—	—
00101b	SCI	—	—	—	—	—	—	TXD5/SDA5/MOSI5	RXD5/SCL5/MISO5	CTS_RTS5/SS5	SCK5	TXD9/SDA9/MOSI9	RXD9/SCL9/MISO9	CTS_RTS9/SS9	SCK9
00110b	SPI*1	—	—	—	—	—	—	MOSIC_B	MISOC_B	RSPCKC_B	SSLC0_B	SSLC1_B	SSLC2_B	SSLC3_B	—
01010b	CAC/ADC12	CACREF	—	—	—	—	—	—	—	—	—	—	—	—	—
01101b	SLCDC	SEG42	SEG43	SEG44	SEG45	SEG46	SEG47	—	—	—	—	—	—	—	—
10001b	QSPI	QSPCLK	QSSL	QIO0	QIO1	QIO2	QIO3	—	—	—	—	—	—	—	—
10110b	UARTA	—	—	—	—	—	—	—	CLKA0	TxDA0	RxDA0	—	CLKA1	TxDA1	RxDA1
ASEL bit		AN021	—	—	—	—	—	AN020	AN019	AN018/EXLVDVBAT	AN017/EXLVD	AN025	AN024	AN023	AN022
ISEL bit		—	IRQ11	IRQ12	—	—	IRQ14	IRQ13	—	—	—	—	—	—	IRQ15
PCR bit	Pull-up	✓	✓	✓	✓	✓	✓	✓	✓	✓	✓	✓	✓	✓	✓
NCODR bit	Nch-OD	✓	✓	✓	✓	✓	✓	✓	✓	✓	✓	✓	✓	✓	✓
100-pin		✓	✓	✓	✓	✓	✓	✓	✓	✓	✓	✓	✓	✓	✓
64-pin		✓	—	—	—	—	—	✓	✓	✓	✓	—	—	—	—

✓: Available
—: Setting prohibited

Note 1. Recommend using pins that have a letter appended to their names, for instance "_A" or "_B", to indicate group membership. For the interface, the AC portion of the electrical characteristics is measured for each group.

Table 18.11 Register settings for input/output pin function (PORT6) (1 of 2)

PSEL[4:0] settings	Function	Pin					
		P600	P601	P602	P608	P609	P610
00000b (value after reset)	Hi-z/SWD	Hi-z					
00011b	GPT	GTIOC2B	GTIOC2A	—	GTIOC4B	GTIOC5A	GTIOC5B
00101b	SCI	—	—	—	RXD1/SCL1/MISO1/RXDX1	SCK1	CTS_RTS1/SS1
01001b	RTC/CLKOUT	CLKOUT	—	—	—	—	—
01010b	CAC/ADC12	CACREF	—	—	—	—	—
01101b	SLCDC	SEG33	SEG32	SEG31	SEG28	SEG29	SEG30

Table 18.11 Register settings for input/output pin function (PORT6) (2 of 2)

PSEL[4:0] settings	Function	Pin					
		P600	P601	P602	P608	P609	P610
ASEL bit		—	—	—	—	—	—
ISEL bit		—	—	—	—	—	—
PCR bit	Pull-up	✓	✓	✓	✓	✓	✓
NCODR bit	Nch-OD	✓	✓	✓	✓	✓	✓
100-pin		✓	✓	✓	✓	✓	✓
64-pin		—	—	—	—	—	—

✓: Available
—: Setting prohibited

Table 18.12 Register settings for input/output pin function (PORT7)

PSEL[4:0] settings	Function	Pin
		P708
00000b (value after reset)	Hi-z/SWD	Hi-z
01010b	CAC/ADC12	CACREF
01101b	SLCDC	SEG8
ASEL bit		—
ISEL bit		IRQ11
PCR bit	Pull-up	✓
NCODR bit	Nch-OD	✓
100-pin		✓
64pin		—

✓: Available
—: Setting prohibited

Table 18.13 Register settings for input/output pin function (PORT8)

PSEL[4:0] settings	Function	Pin	
		P814	P815
00000b (value after reset)	Hi-z/SWD	Hi-z	
01101b	SLCDC	CAPL	CAPH
10000b	CANFD	CTX0	CRX0
10110b	UARTA	RxDA1	TxDA1
ASEL bit		—	—
ISEL bit		—	—
PCR bit	Pull-up	✓	✓
NCODR bit	Nch-OD	✓	✓
100-pin		✓	✓
64-pin		✓	✓

✓: Available
—: Setting prohibited

19. Port Output Enable for GPT (POEG)

19.1 Overview

The Port Output Enable (POEG) function can place the General PWM Timer (GPT) output pins in the output disable state in one of the following ways:

- Input level detection of the GTETRGn (n = A to D) pins
- Output-disable request from the GPT
- Oscillation stop detection of the clock generation circuit
- Register settings

The GTETRGn (n = A to D) pins can be used as GPT external trigger input pins.

Table 19.1 lists the POEG specifications, Figure 19.1 shows a block diagram, and Table 19.2 lists the input pins.

Table 19.1 POEG specifications

Parameter	Specifications
Output-disable control through input level detection	• The GPT output pins can be disabled when a GTETRGn rising edge or high level is sampled after polarity and filter selection.
Output-disable request from the GPT	• When the GTIOCxA pin and the GTIOCxB pin are driven to an active level simultaneously, the GPT generates an output-disable request to the POEG. Through reception of these requests, the POEG can control whether the GTIOCxA and GTIOCxB pins are output-disabled.
Output-disable control through oscillation stop detection	• The GPT output pins can be disabled when oscillation of the clock generation circuit stops.
Output-disable control by software (registers)	• The GPT output pins can be disabled by modifying the register settings.
Interrupt	• Interrupts can be generated by detecting the input level of external trigger input pins (GTETRGn pins). • Interrupts can be generated when all GPT output pins are driven to an active level simultaneously.
External trigger output to the GPT	• The GTETRGn signals can be output to the GPT after polarity and filter selection. (count start, count stop, count clear, up-count, down-count, or input capture function).
Noise filtering	• For input from the GTETRGn pins, PCLKB/1, PCLKB/8, PCLKB/32, or PCLKB/128 can be selected as the noise filtering clock. (Filtering is performed by sampling the input signals three times using the selected clock.) • Positive or negative polarity can be selected for any of the GTETRGn input pins. • Signal state after polarity and filter selection can be monitored.
TrustZone Filter	• Security attribution can be set for each groups.

Note: n = A to D, x = 0 to 5

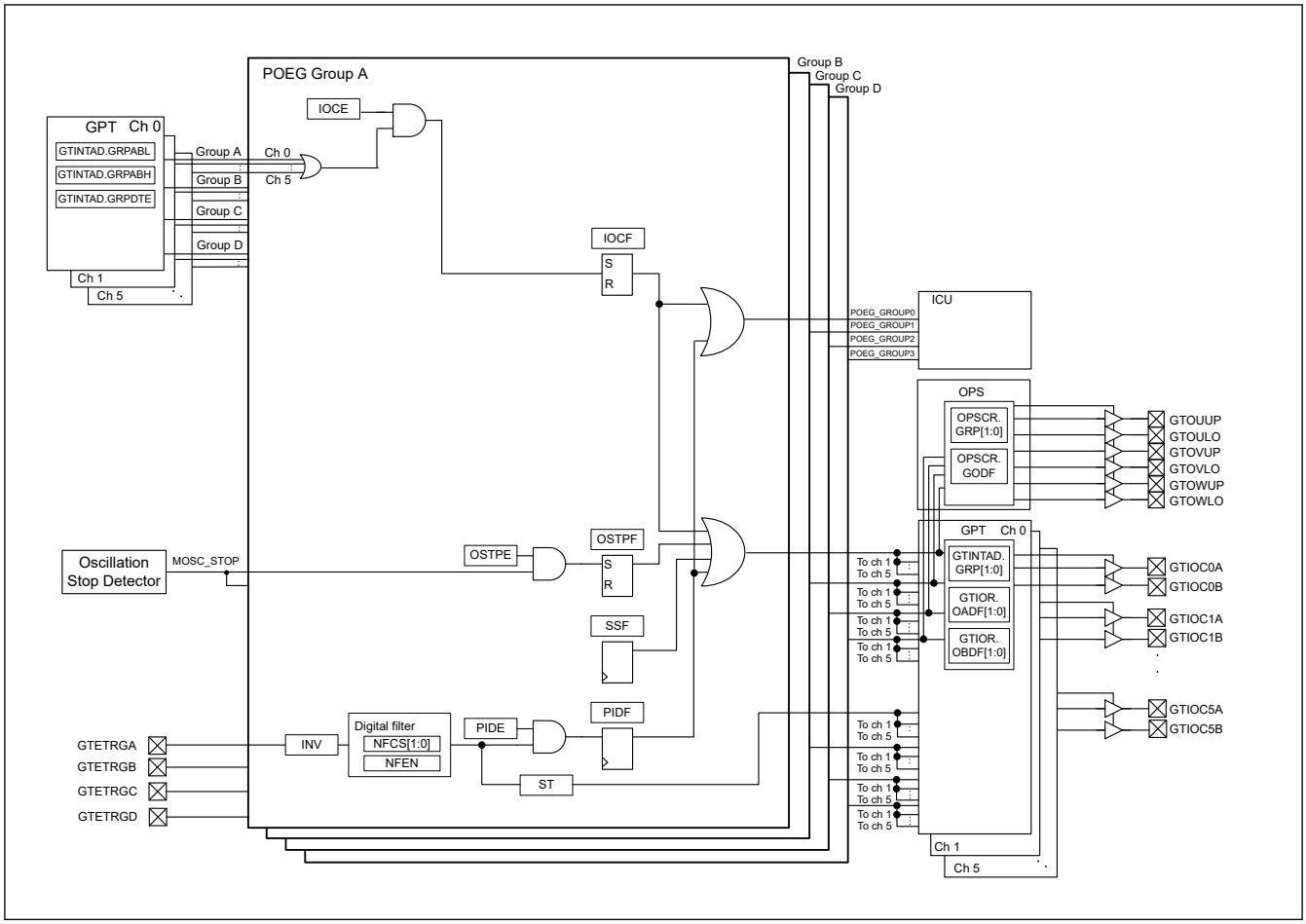

Figure 19.1 POEG block diagram

Table 19.2 POEG input pins

Pin name	I/O	Description
GTETRGA	Input	GPT output pin output-disable request signal or GPT external trigger input pin A
GTETRGB	Input	GPT output pin output-disable request signal or GPT external trigger input pin B
GTETRGC	Input	GPT output pin output-disable request signal or GPT external trigger input pin C
GTETRGD	Input	GPT output pin output-disable request signal or GPT external trigger input pin D

19.2 Register Descriptions

19.2.1 POEGGn : POEG Group n Setting Register (n = A to D)

Base address: POEG = 0x4008_A000

Offset address: 0x000 (POEGGA)
0x100 (POEGGB)
0x200 (POEGGC)
0x300 (POEGGD)

Bit position:	31	30	29	28	27	26	25	24	23	22	21	20	19	18	17	16
Bit field:	NFCS[1:0]		NFEN	INV	—	—	—	—	—	—	—	—	—	—	—	ST
Value after reset:	0	0	0	0	0	0	0	0	0	0	0	0	0	0	0	0

Bit position:	15	14	13	12	11	10	9	8	7	6	5	4	3	2	1	0
Bit field:	—	—	—	—	—	—	—	—	—	OSTPE	IOCE	PIDE	SSF	OSTPF	IOCF	PIDF
Value after reset:	0	0	0	0	0	0	0	0	0	0	0	0	0	0	0	0

Bit	Symbol	Function	R/W
0	PIDF	Port Input Detection Flag 0: No output-disable request from the GTETRGn pin occurred 1: Output-disable request from the GTETRGn pin occurred	R/W*1
1	IOCF	Detection Flag for GPT Output-Disable Request 0: No output-disable request from GPT occurred 1: Output-disable request from GPT occurred	R/W*1
2	OSTPF	Oscillation Stop Detection Flag 0: No output-disable request from oscillation stop detection occurred 1: Output-disable request from oscillation stop detection occurred	R/W*1
3	SSF	Software Stop Flag 0: No output-disable request from software occurred 1: Output-disable request from software occurred	R/W
4	PIDE	Port Input Detection Enable 0: Disable output-disable requests from the GTETRGn pins 1: Enable output-disable requests from the GTETRGn pins	R/W*2
5	IOCE	Enable for GPT Output-Disable Request 0: Disable output-disable requests from GPT 1: Enable output-disable requests from GPT	R/W*2
6	OSTPE	Oscillation Stop Detection Enable 0: Disable output-disable requests from oscillation stop detection 1: Enable output-disable requests from oscillation stop detection	R/W*2
15:7	—	These bits are read as 0. The write value should be 0.	R/W
16	ST	GTETRGn Input Status Flag 0: GTETRGn input after filtering is 0 1: GTETRGn input after filtering is 1	R
27:17	—	These bits are read as 0. The write value should be 0.	R/W
28	INV	GTETRGn Input Reverse 0: Input GTETRGn as-is 1: Input GTETRGn in reverse	R/W
29	NFEN	Noise Filter Enable 0: Disable noise filtering 1: Enable noise filtering	R/W

Bit	Symbol	Function	R/W
31:30	NFCS[1:0]	Noise Filter Clock Select 0 0: Sample GTETRGn pin input level three times every PCLKB 0 1: Sample GTETRGn pin input level three times every PCLKB/8 1 0: Sample GTETRGn pin input level three times every PCLKB/32 1 1: Sample GTETRGn pin input level three times every PCLKB/128	R/W

Note 1. Only 0 can be written to clear the flag.
Note 2. Can be modified only once after a reset.

The POEGGn (n = A to D) registers control the output-disable state of the GPT pins, interrupts, and the external trigger input to the GPT.

In the descriptions, POEGGn represents the POEGGn (n = A to D) registers.

19.3 Output-Disable Control Operation

If any of the following conditions is satisfied, the GTIOCxA, GTIOCxB, and the 3-phase PWM output for BLDC motor control pins can be set to output-disable:

- Input level or edge detection of the GTETRGn pins
  When POEGGn.PIDE is 1, the POEGGn.PIDF flag is set to 1.
- Output-disable request from the GPT
  When POEGGn.IOCE is 1, the POEGGn.IOCF flag is set to 1 if the disable request is enabled by GTINTAD.
  The GTINTAD.GRPABH and GTINTAD.GRPABL settings apply to the group selected by the GPT register GTINTAD.GRP[1:0] or OPSCR.GRP[1:0].

  Note: The disable request is valid only when the security attributions of GPT and POEG are same. The disable request from GPT with a security attribution different from the security attribution of POEG is invalidated by the security attribution judgment.
- Oscillation stop detection for the clock generation circuit
  While POEGGn.OSTPE is 1, the halt status of the main clock oscillator is detected and the POEGGn. OSTPF flag is set to 1.
- SSF bit setting
  When POEGGn.SSF is set to 1, the GPT and PWM output are disabled.

The output-disable state is controlled in the GPT module. The output-disable of the GTIOCxA and GTIOCxB pins is set in the GTINTAD.GRP[1:0], GTIOR.OADF[1:0], and GTIOR.OBDF[1:0] bits in GPTx. The output-disable of the 3-phase PWM output for BLDC motor control pins is set in the OPSCR.GRP[1:0] bits and OPSCR.GODF bit in GPT_OPS.

19.3.1 Pin Input Level Detection Operation

If the input conditions set in POEGGn.PIDE, POEGGn.NFCS[1:0], POEGGn.NFEN, and POEGGn.INV occur on the GTETRGn pins, the GPT output pins are output-disabled.

19.3.1.1 Digital Filter

Figure 19.2 shows high-level detection by the digital filter. When a high level associated with the POEGGn.INV polarity setting is detected three times consecutively with the sampling clock selected in POEGGn.NFCS[1:0] and POEGGn.NFEN, the detected level is recognized as high, and the GPT output pins are output-disabled. If even one low level is detected during this interval, the detected level is not recognized as high. In addition, in an interval where the sampling clock is not output, changes of the levels on the GTETRGn pins are ignored.

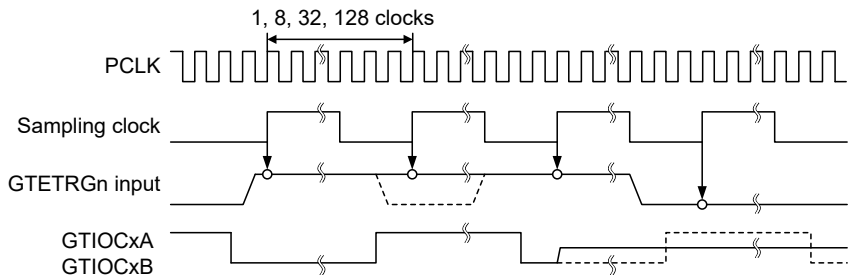

When high level is sampled at all points	[1]	[2]	[3]	Flag set (GTETRGn received)
When low level is sampled at least once	[1]	[0]	[1]	Flag not set

Note: PCLK = PCLKB
Note: Each channel output can be set in the GPT setting. Low level sampling can be set in the POEGGn.INV setting.

Figure 19.2 Example of digital filter operation

19.3.2 Output-Disable Requests from the GPT

For details on the operation, see the description for GTIOC Pin Output Negate Control in section 20, General PWM Timer (GPT).

19.3.3 Output-Disable Control Using Detection of Stopped Oscillation

When the oscillation stop detection function in the clock generation circuit detects stopped oscillation while POEGGn.OSTPE is 1, the GPT output pins are output-disabled for each group.

19.3.4 Output-Disable Control Using Registers

The GPT output pins can be directly controlled by writing 1 to the Software Stop flag, POEGGn.SSF.

19.3.5 Release from Output-Disable

To release the GPT output pins placed in the output-disable state, either return them to their initial state with a reset or clear all of the following flags:

- POEGGn.PIDF
- POEGGn.IOCF
- POEGGn.OSTPF
- POEGGn.SSF

Writing 0 to the POEGGn.PIDF flag is ignored (the flag is not cleared) if the external input pins, GTETRGn are not disabled and the POEGGn.ST bit is not set to 0.

Writing 0 to the POEGGn.IOCF flag is valid (the flag is cleared) only if all of the GTST.OABHF and GTST.OABLF flags in the GPT are set to 0.

Writing 0 to the POEGGn.OSTPF flag is ignored (the flag is not cleared) if the OSTDSR.OSTDF flag in the clock generation circuit is not set to 0. In addition, when the flag set and release occur at the same time, the flag set takes precedence.

Figure 19.3 shows the release timing for output-disable. The output-disable is released at the beginning of the next count cycle of the GPT after the flag is cleared.

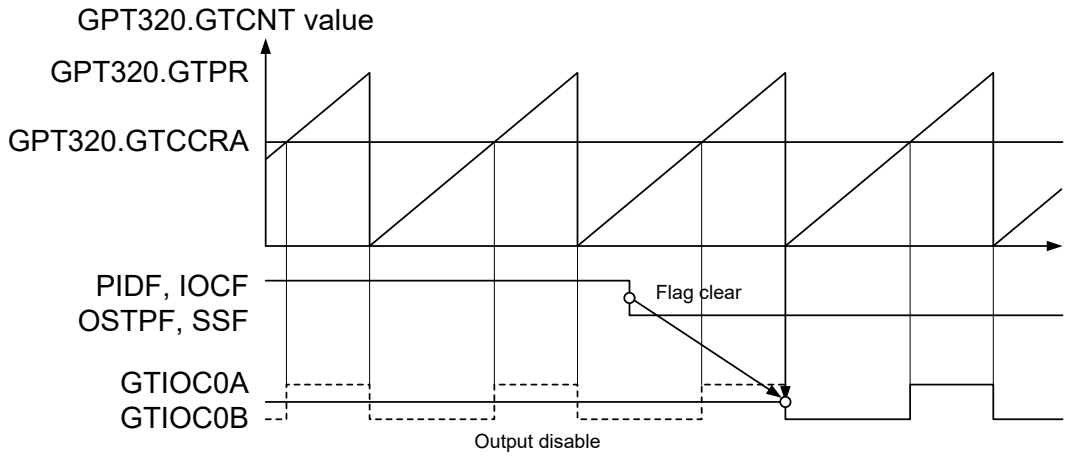

Note: The base address of the registers are the same.

Figure 19.3 Output-disable release timing for GPT pin outputs

19.4 Interrupt Sources

The POEG generates an interrupt request for the following factors:

- Output-disable control by the input level detection
- Output-disable request from the GPT

Table 19.3 lists the conditions for interrupt requests.

Table 19.3 Interrupt sources and conditions

Interrupt source	Symbol	Associated flag	Trigger conditions
POEG group A interrupt	POEG_GROUPA	POEGGA.IOCF	An output-disable request from a GPT disable request occurred
		POEGGA.PIDF	An output-disable request from the GTETRGA pin occurred
POEG group B interrupt	POEG_GROUPB	POEGGB.IOCF	An output-disable request from a GPT disable request occurred
		POEGGB.PIDF	An output-disable request from the GTETRGB pin occurred
POEG group C interrupt	POEG_GROUPC	POEGGC.IOCF	An output-disable request from a GPT disable request occurred
		POEGGC.PIDF	An output-disable request from the GTETRGC pin occurred
POEG group D interrupt	POEG_GROUPD	POEGGD.IOCF	An output-disable request from a GPT disable request occurred
		POEGGD.PIDF	An output-disable request from the GTETRGD pin occurred

19.5 External Trigger Output to the GPT

The POEG outputs signals generated by filtering and level detection of GTETRGn pins input signals as the GPT operation trigger signal for the following:

- Count start
- Count stop
- Count clear
- Up-count
- Down-count
- Input capture

For the POEGGn.INV polarity setting signal, when the same level is input three times continuously with the sampling clock selected in POEGGn.NFCS[1:0] and POEGGn.NFEN, that value is output. Set the control registers the same as for the input level detection operation described in section 19.3.1. Pin Input Level Detection Operation. The state after filtering can be monitored in POEGGn.ST.

Figure 19.4 shows the output timing of an external trigger to the GPT.

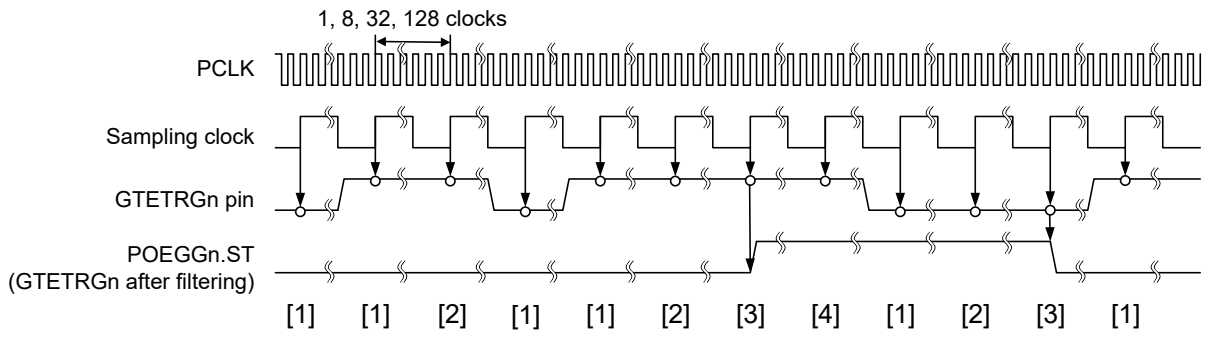

Note: PCLK = PCLKB
Note: Each channel output can be set in the GPT settings. Polarity can be reversed in POEGGn.INV.

Figure 19.4 Output timing of external trigger to the GPT

19.6 Usage Notes

19.6.1 Transition to Software Standby Mode

When using the POEG, do not invoke Software Standby mode. In this mode, the POEG stops and therefore output disable of the pins cannot be controlled.

19.6.2 Specifying Pins Associated with the GPT

The POEG controls output-disable only when a pin is associated with the GPT in the PmnPFS.PMR and PmnPFS.PSEL settings. When the pin is specified as a general I/O pin, the POEG does not perform output-disable control.

20. General PWM Timer (GPT)

20.1 Overview

The General PWM Timer (GPT) is a 32-bit timer with GPT32 × 2 channels and a 16-bit timer with GPT16 × 4 channels. PWM waveforms can be generated by controlling the up-counter, down-counter, or the up- and down-counter. In addition, PWM waveforms can be generated for controlling brushless DC motors. The GPT can also be used as a general-purpose timer.

Table 20.1 lists the GPT specifications, Table 20.2 shows the GPT functions, and Figure 20.1 shows a block diagram.

Table 20.1 GPT specifications

Item	Description
Functions	● 32 bits × 2 channels (GPT32n (n = 0, 1)) ● 16 bits × 4 channels (GPT16m (m = 2 to 5)) ● Up-counting or down-counting (saw waves) or up/down-counting (triangle waves) for each counter ● Clock sources independently selectable for each channel ● Two input/output pins per channel ● Two output compare/input capture registers per channel ● For the two output compare/input capture registers of each channel, four registers are provided as buffer registers and are capable of operating as comparison registers when buffering is not in use ● In output compare operation, buffer switching can be at crests or troughs, enabling the generation of laterally asymmetric PWM waveforms ● Registers for setting up frame cycles in each channel with capability for generating interrupts at overflow or underflow ● Generation of dead times in PWM operation ● Synchronous starting, stopping and clearing counters for arbitrary channels ● Count start, count stop, count clear, up-count, down-count, or input capture operation in response to a maximum of 8 ELC events ● Count start, count stop, count clear, up-count, down-count, or input capture operation in response to the status of two input pins ● Count start, count stop, count clear, up-count, down-count, or input capture operation in response to a maximum of 4 external triggers ● Output pin disable function by detected short-circuits between output pins ● PWM waveform for controlling brushless DC motors can be generated ● Compare match A to F event, overflow/underflow event, and input UVW edge event can be output to the ELC ● Enables the noise filter for input capture and input UVW ● Period count function ● Logical operation between the channel output ● Bus clock: PCLKA, Core clock: PCLKD ● Frequency ratio: PCLKA:PCLKD = 1:N (N = 1/2/4/8/16/32/64)

Table 20.2 GPT functions (1 of 2)

Parameter	Description
Count clock	PCLKD PCLKD/2 PCLKD/4 PCLKD/8 PCLKD/16 PCLKD/32 PCLKD/64 PCLKD/256 PCLKD/1024 GTETRGA, GTETRGB, GTETRGC, GTETRGD
Output compare/input capture registers (GTCCR)	GTCCRA GTCCRB
Compare/buffer registers	GTCCRC GTCCRD GTCCRE GTCCRF
Cycle setting register	GTPR
Cycle setting buffer register	GTPBR

Table 20.2 GPT functions (2 of 2)

Parameter		Description
I/O pins		GTIOCnA GTIOCnB (n = 0 to 5)
External trigger input pin[*1]		GTETRGA GTETRGB GTETRGC GTETRGD
Counter clear sources		GTPR register compare match Input capture Input pin status ELC event input GTETRGn (n = A to D) pin input
Period count function		Available (GPT32n (n = 0, 1), GPT16m (m = 2 to 4))
Compare match output	Low output	Available
	High output	Available
	Toggle output	Available
Input capture function		Available
Automatic addition of dead time		Available (no dead time buffer)
PWM mode		Available
Phase count function		Available
Buffer operation		Double buffer Simultaneous operation disable control for multiple channels
One-shot operation		Available
DMAC/DTC activation		All the interrupt sources
Brushless DC motor control function		Available
Interrupt sources		9 sources ● GTCCRA compare match/input capture(GPTn_CCMPA) ● GTCCRB compare match/input capture(GPTn_CCMPB) ● GTCCRC compare match(GPTn_CMPC) ● GTCCRD compare match(GPTn_CMPD) ● GTCCRE compare match(GPTn_CMPE) ● GTCCRF compare match(GPTn_CMPF) ● GTCNT overflow (GTPR compare match) (GPTn_OVF) ● GTCNT underflow (GPTn_UDF) ● GTPC count stop(GPTx_PC) (x = 0 to 4)
Event linking (ELC) function		Available[*2]
Noise filtering function		Available
Logical operation between the channel output		Available
Module-stop function		Module-stop state can be set for each channel to reduce power consumption
TrustZone Filter		Security attribution can be set for each channel

Note 1. GTETRGn connects to GPT through the POEG module. Therefore, to use the GPT function, supply the POEG clock by clearing the MSTPCRD.MSTPDn (n = 11 to 14) bit.

Note 2. See section 20.5. Operations Linked by ELC.

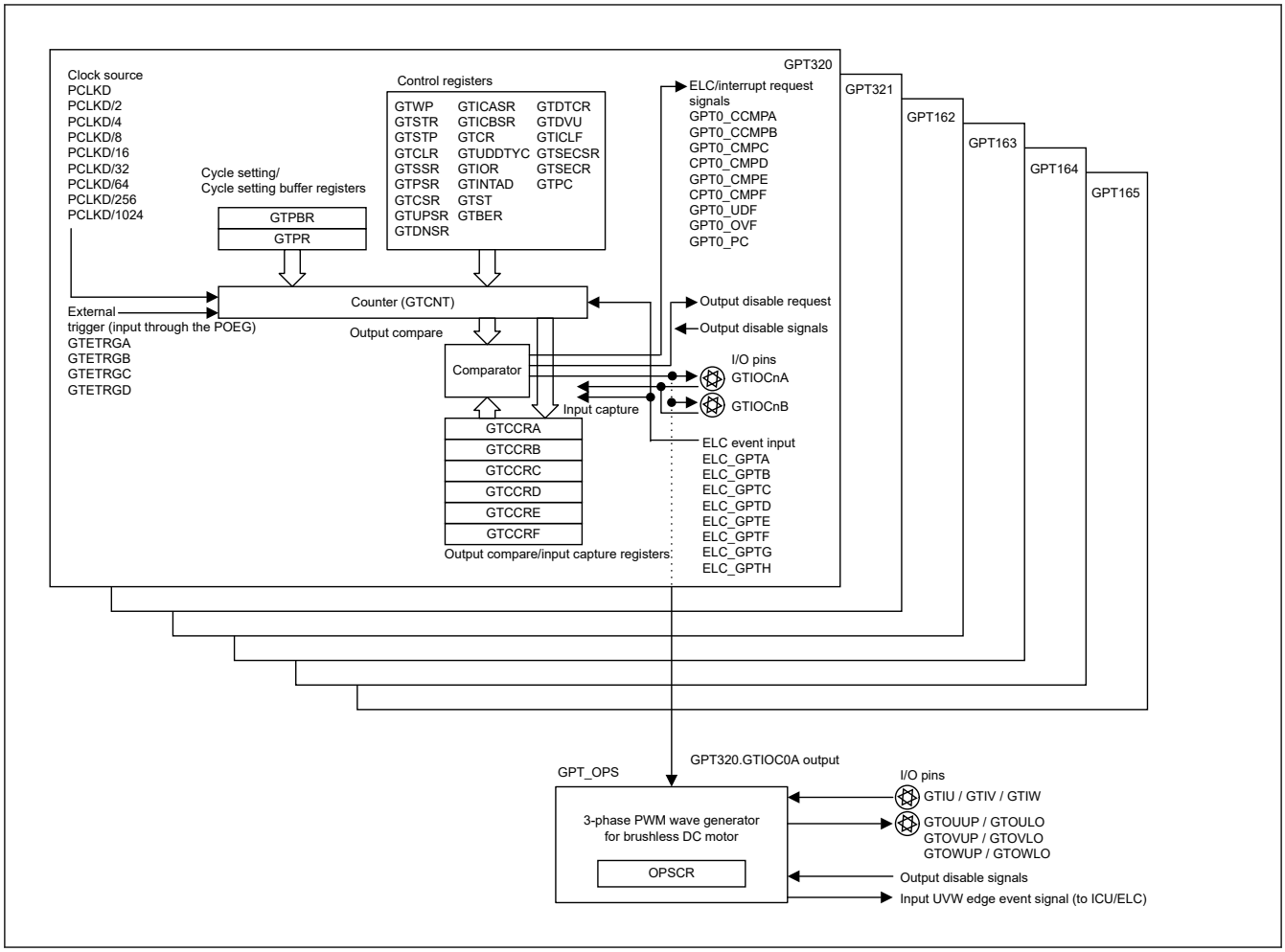

Figure 20.1 GPT block diagram

Figure 20.2 shows an example using multiple GPTs.

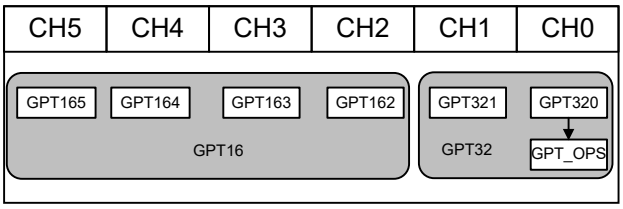

Figure 20.2 Association between GPT channels and module names

Table 20.3 lists the I/O pins.

Table 20.3 GPT I/O pins (1 of 2)

Channel	Pin name	I/O	Function
Common	GTETRGx	Input	External trigger input pin x (input through the POEG)
GPT32n	GTIOCnA	I/O	GTCCRA register input capture input/output compare output/PWM output pin
	GTIOCnB	I/O	GTCCRB register input capture input/output compare output/PWM output pin
GPT16m	GTIOCmA	I/O	GTCCRA register input capture input/output compare output/PWM output pin
	GTIOCmB	I/O	GTCCRB register input capture input/output compare output/PWM output pin

Table 20.3 GPT I/O pins (2 of 2)

Channel	Pin name	I/O	Function
GPT_OPS	GTIU	Input	Hall sensor input pin U
	GTIV	Input	Hall sensor input pin V
	GTIW	Input	Hall sensor input pin W
	GTOUUP	Output	3-phase PWM output for BLDC motor control (positive U-phase)
	GTOULO	Output	3-phase PWM output for BLDC motor control (negative U-phase)
	GTOVUP	Output	3-phase PWM output for BLDC motor control (positive V-phase)
	GTOVLO	Output	3-phase PWM output for BLDC motor control (negative V-phase)
	GTOWUP	Output	3-phase PWM output for BLDC motor control (positive W-phase)
	GTOWLO	Output	3-phase PWM output for BLDC motor control (negative W-phase)

Note: x: A to D
n: 0, 1
m: 2 to 5

20.2 Register Descriptions

20.2.1 GTWP : General PWM Timer Write-Protection Register

Base address: GPT32n = 0x4016_9000 + 0x0100 × n (n = 0, 1)
GPT16m = 0x4016_9000 + 0x0100 × m (m = 2 to 5)

Offset address: 0x00

Bit position:	31	30	29	28	27	26	25	24	23	22	21	20	19	18	17	16
Bit field:	—	—	—	—	—	—	—	—	—	—	—	—	—	—	—	—
Value after reset:	0	0	0	0	0	0	0	0	0	0	0	0	0	0	0	0

Bit position:	15	14	13	12	11	10	9	8	7	6	5	4	3	2	1	0
Bit field:	PRKEY[7:0]								—	—	—	CMNWP	CLRWP	STPWP	STRWP	WP
Value after reset:	0	0	0	0	0	0	0	0	0	0	0	0	0	0	0	0

Bit	Symbol	Function	R/W
0	WP	Register Write Disable 0: Write to the register enabled 1: Write to the register disabled	R/W
1	STRWP	GTSTR.CSTRT Bit Write Disable 0: Write to the bit is enabled 1: Write to the bit is disabled	R/W
2	STPWP	GTSTP.CSTOP Bit Write Disable 0: Write to the bit is enabled 1: Write to the bit is disabled	R/W
3	CLRWP	GTCLR.CCLR Bit Write Disable 0: Write to the bit is enabled 1: Write to the bit is disabled	R/W
4	CMNWP	Common Register Write Disabled 0: Write to the register is enabled 1: Write to the register is disabled	R/W
7:5	—	These bits are read as 0. The write value should be 0.	R/W
15:8	PRKEY[7:0]	GTWP Key Code When 0xA5 is written to these bits, writing to the WP, STRWP, STPWP, CLRWP, and CMNWP bits are permitted. These bits are read as 0.	W

Bit	Symbol	Function	R/W
31:16	—	These bits are read as 0. The write value should be 0.	R/W

GTWP enables or disables writing to registers to prevent accidental modification. Protection by the GTWP register is only for the writes by the CPU. GTWP does not protect registers from updates that occur in association with CPU writes.

WP bit (Register Write Disable)

The following is a list of write enabled or disabled registers:

GTSSR, GTPSR, GTCSR, GTUPSR, GTDNSR, GTICASR, GTICBSR, GTCR, GTUDDTYC, GTIOR, GTINTAD, GTST, GTBER, GTCNT, GTCCRA, GTCCRB, GTCCRC, GTCCRD, GTCCRE, GTCCRF, GTPR, GTPBR, GTDTCR, GTDVU, GTICLF, GTPC.

STRWP bit (GTSTR.CSTRT Bit Write Disable)

The STRWP bit enables or disables starting the updating of counter values by writing to the CSTRTn bit (n = 0 to 5) corresponding to a channel number in the GTSTR register.

The bit position of each CSTRTn bit in the GTSTR register is allocated to the channel with the corresponding number, and writing to the GTSTR register for any channel results in writing to the registers of all channels. The STRWP bit for each channel does not control writing but only controls updating of the CSTRT bit for the corresponding channel when simultaneously writing to all channels.

Therefore, when writing to the CSTRT bits of a channel for which the setting of the STRWP bit is 1(disabling writing), the CSTRT bit for the given channel is not updated, but the CSTRT bits corresponding to channel for which the setting of the STRWP bit is 0 (enabling writing) are updated. For example, when the setting of the GPT320.GTWP.STRWP bit is 0 (enabling writing), writing 1 to the GPT321.GTSTR.CSTRT0 bit when its current setting is 0 causes the value to be updated, and the GPT320.GTCNT counter starts to run. When the setting of the GPT320.GTWP.STRWP bit is 1 (disabling writing), writing 1 to the GPT321.GTSTR.CSTRT0 bit when its current setting is 0 leaves the bit with the value 0, and the GPT320.GTCNT counter does not run.

If you want to protect all bits in the GTSTR register from being updated, set the STRWP bits of all channels to 1.

STPWP bit (GTSTP.CSTOP Bit Write Disable)

The STPWP bit enables or disables starting the updating of counter values by writing to the CSTOPn bit (n = 0 to 5) corresponding to a channel number in the GTSTP register.

The bit position of each CSTOPn bit in the GTSTP registers is allocated to the channel with the corresponding number, and the writing to the GTSTP register for any channel results in writing to the registers of all channels. The STPWP bit for each channel does not control writing but only controls updating of the CSTOP bit for the corresponding channel when simultaneously writing to all channels.

Therefore, when writing to the CSTOP bits of a channel for which the setting of the STPWP bit is 1(disabling writing), the CSTOP bit for the given channel is not updated, but the CSTOP bits corresponding to channel for which the setting of the STPWP bit is 0 (enabling writing) are updated. For example, when the setting of the GPT320.GTWP.STPWP bit is 0 (enabling writing), writing 1 to the GPT321.GTSTP.CSTOP0 bit when its current setting is 0 causes the value to be updated, and the GPT320.GTCNT counter is stopped. When the setting of the GPT320.GTWP.STPWP bit is 1 (disabling writing), writing 1 to the GPT321.GTSTP.CSTOP0 bit when its current setting is 0 leaves the bit with the value 0, and the GPT320.GTCNT counter is not stopped.

If you want to protect all bits in the GTSTP register from being updated, set the STPWP bits of all channels to 1.

CLRWP bit (GTCLR.CCLR Bit Write Disable)

CLRWP bit enables or disables starting the updating of counter values by writing to the CCLRn bit (n = 0 to 5) corresponding to a channel number in the GTCLR register.

The bit position of each CCLRn bit in the GTCLR registers is allocated to the channel with the corresponding number, and the writing to the GTCLR register for any channel results in writing to the registers of all channels. The CLRWP bit for each channel does not control writing but only controls updating of the CCLR bit for the corresponding channel when simultaneously writing to all channels.

Therefore, when writing to the CCLR bits of a channel for which the setting of the CLRWP bit is 1(disabling writing), the CCLR bit for the given channel is not updated, but the CCLR bits corresponding to channel for which the setting

of the CLRWP bit is 0 (enabling writing) are updated. For example, when the setting of the GPT320.GTWP.CLRWP bit is 0 (enabling writing), writing 1 to the GPT321.GTCLR.CCLR0 bit when its current setting is 0 causes the value to be updated, and the GPT320.GTCNT counter is cleared. When the setting of the GPT320.GTWP.CLRWP bit is 1 (disabling writing), writing 1 to the GPT321.GTCLR.CCLR0 bit when its current setting is 0 leaves the bit with the value 0, and the GPT320.GTCNT counter is not cleared.

If you want to protect all bits in the GTCLR register from being updated, set the CLRWP bits of all channels to 1.

CMNWP bit (Common Register Write Disabled)

CMNWP bit enables or disables starting the updating of counter values by writing to the SECSELn bit (n = 0 to 5) corresponding to a channel number in the GTSECSR register or to the GTSECR register.

The bit position of each SECSEL bit in the GTSECSR registers is allocated to the channel with the corresponding number, and the writing to the GTSECSR register for any channel results in writing to the registers of all channels. Writing to the GTSECR register of any channel leads to writing to the registers of all channels. The CMNWP bit for each channel does not control writing but only controls updating of the SECSEL bit and the GTSECR register value for the corresponding channel when simultaneously writing to all channels.

Therefore, when writing to the SECSEL bit and the GTSECR register value of a channel for which the setting of the CMNWP bit is 1(disabling writing), the SECSEL bit and the GTSECR register value for the given channel is not updated, but the SECSEL bit and the GTSECR register value corresponding to channel for which the setting of the CMNWP bit is 0 (enabling writing) are updated.

For example, when the setting of the GPT320.GTWP.CMNWP bit is 0 (enabling writing), writing to the GPT321.GTSECSR.SECSEL0 bit causes the value of the GPT320.GTSECSR.SECSEL0 bit to be updated. In the same way, writing to the GPT321.GTSECR register updates the value of the GPT320.GTSECR register. When the setting of the GPT320.GTWP.CMNWP bit is 1 (disabling writing), writing to the GPT321.GTSECSR.SECSEL0 bit does not cause the value of the GPT320.GTSECSR.SECSEL0 bit to be updated. In the same way, writing to the GPT321.GTSECR register does not update the value of the GPT320.GTSECR register.

If you want to protect all bits in the GTSECSR and GTSECR registers from being updated, set the CMNWP bits of all channels to 1.

PRKEY[7:0] bit (GTWP Key Code)

This bit controls whether the WP, STRWP, STPWP, CLRWP, and CMNWP bits can be overwritten.

20.2.2 GTSTR : General PWM Timer Software Start Register

Base address: GPT32n = 0x4016_9000 + 0x0100 × n (n = 0 to 1)
GPT16m = 0x4016_9000 + 0x0100 × m (m = 2 to 5)

Offset address: 0x04

Bit position:	31	30	29	28	27	26	25	24	23	22	21	20	19	18	17	16
Bit field:	—	—	—	—	—	—	—	—	—	—	—	—	—	—	—	—
Value after reset:	0	0	0	0	0	0	0	0	0	0	0	0	0	0	0	0

Bit position:	15	14	13	12	11	10	9	8	7	6	5	4	3	2	1	0
Bit field:	—	—	—	—	—	—	—	—	—	—	CSTRT5	CSTRT4	CSTRT3	CSTRT2	CSTRT1	CSTRT0
Value after reset:	0	0	0	0	0	0	0	0	0	0	0	0	0	0	0	0

Bit	Symbol	Function	R/W
5:0	CSTRT0 to CSTRT5[*1]	Channel n GTCNT Count Start (n : the same as bit position value) 0: GTCNT counter not start 1: GTCNT counter start	R/W
31:6	—	These bits are read as 0. The write value should be 0.	R/W

Note 1. The bits that can be used vary depending on the product. The n in CSTRTn is the same as the GPT channel number. For this product, n is 0 to 5.

The GTSTR starts the GTCNT counter operation for each channel n, where n = 0 to 5.

The GTSTR bit number represents the channel number. The GTSTR register of each channel is shared by all of the channels. The GTCNT counter starts for the channel associated with the GTSTR bit number where 1 is written. Writing 0 has no effect on the status of GTCNT counter and the value of GTSTR register.

The bit corresponding to channel which security attribution is configured as secure can be read by non-secure access but cannot be written by non-secure access. For example, if GPT channel 0 is configured as secure and other GPTs are configured as non-secure, the CSTRT0 bit cannot be written by non-secure access to GPT321.GTSTR register, and the GTCNT counter operation status of GPT channel 0 is not changed. When the GTSTR register in GPT channel 1 is read by non-secure access in the same security configuration as the previous example, the GTCNT counter operation status of GPT channel 0 (CSTRT0 bit) can be read.

For the association between module names and channel numbers, see Figure 20.2.

CSTRTn bits (Channel n GTCNT Count Start (n = 0 to 5))

The CSTRTn bits start channel n of the GTCNT counter operation. Writing to the GTSTR.CSTRTn bit (n = 0 to 5) has no effect unless the GTSSR.CSTRT bit is set to 1.

The read data shows the counter status of each channel (GTCR.CST bit). A value of 0 means the counter is stopped and 1 means the counter is running.

20.2.3 GTSTP : General PWM Timer Software Stop Register

Base address: GPT32n = 0x4016_9000 + 0x0100 × n (n = 0, 1)
GPT16m = 0x4016_9000 + 0x0100 × m (m = 2 to 5)

Offset address: 0x08

Bit position:	31	30	29	28	27	26	25	24	23	22	21	20	19	18	17	16
Bit field:	—	—	—	—	—	—	—	—	—	—	—	—	—	—	—	—
Value after reset:	1	1	1	1	1	1	1	1	1	1	1	1	1	1	1	1

Bit position:	15	14	13	12	11	10	9	8	7	6	5	4	3	2	1	0
Bit field:	—	—	—	—	—	—	—	—	—	—	CSTOP5	CSTOP4	CSTOP3	CSTOP2	CSTOP1	CSTOP0
Value after reset:	1	1	1	1	1	1	1	1	1	1	1	1	1	1	1	1

Bit	Symbol	Function	R/W
5:0	CSTOP0 to CSTOP5	Channel n GTCNT Count Stop (n : the same as bit position value) 0: GTCNT counter not stop 1: GTCNT counter stop	R/W
31:6	—	These bits are read as 0. The write value should be 0.	R/W

The GTSTP stops the GTCNT counter operation for each channel n, where n = 0 to 5.

The GTSTP bit number represents the channel number. The GTSTP register of each channel is shared by all the channels. The GTCNT counter stops for the channel associated with the GTSTP bit number where 1 is written. Writing 0 has no effect on the status of the GTCNT counter and the value of GTSTP register.

The bit corresponding to channel which security attribution is configured as secure can be read by non-secure access but cannot be written by non-secure access. For example, if GPT channel 0 is configured as secure and other GPTs are configured as non-secure, the CSTOP0 bit cannot be written by non-secure access to GTSTP register in GPT channel 1, and the GTCNT counter operation status of GPT channel 0 is not changed. When the GTSTP register in GPT channel 1 is read by non-secure access in the same security configuration as the previous example, the GTCNT counter operation status of GPT channel 0 (CSTOP0 bit) can be read.

For the association between module names and channel numbers, see Figure 20.2.

CSTOPn bits (Channel n GTCNT Count Stop (n = 0 to 5))

The CSTOPn bits stop channel n of the GTCNT counter operation. Writing to the GTSTP.CSTOPn bit (n = 0 to 5) has no effect unless the GTPSR.CSTOP bit is set to 1. The read data shows the counter status of each channel (invert of GTCR.CST bit). A value of 0 means the counter is running and 1 means the counter is stopped.

20.2.4 GTCLR : General PWM Timer Software Clear Register

Base address: GPT32n = 0x4016_9000 + 0x0100 × n (n = 0, 1)
GPT16m = 0x4016_9000 + 0x0100 × m (m = 2 to 5)

Offset address: 0x0C

Bit position:	31	30	29	28	27	26	25	24	23	22	21	20	19	18	17	16
Bit field:	—	—	—	—	—	—	—	—	—	—	—	—	—	—	—	—
Value after reset:	0	0	0	0	0	0	0	0	0	0	0	0	0	0	0	0

Bit position:	15	14	13	12	11	10	9	8	7	6	5	4	3	2	1	0
Bit field:	—	—	—	—	—	—	—	—	—	—	CCLR5	CCLR4	CCLR3	CCLR2	CCLR1	CCLR0
Value after reset:	0	0	0	0	0	0	0	0	0	0	0	0	0	0	0	0

Bit	Symbol	Function	R/W
5:0	CCLR0 to CCLR5	Channel n GTCNT Count Clear (n : the same as bit position value) 0: GTCNT counter is not cleared 1: GTCNT counter is cleared	W
31:6	—	The write value should be 0.	W

The GTCLR is a write-only register that clears the GTCNT counter operation for each channel n, where n = 0 to 5.

The GTCLR bit number represents the channel number. The GTCLR register of each channel is shared by all the channels. The GTCNT counter is cleared for the channel associated with the GTCLR bit number where 1 is written. Writing 0 has no effect on the status of GTCNT counter.

The bit corresponding to channel which security attribution is configured as secure can not be written by non-secure access. For example, if GPT channel 0 is configured as secure and other GPTs are configured as non-secure, the CCLR0 bit cannot be written by non-secure access to GTCLR register in GPT channel 1, and the GTCNT counter of GPT channel 0 is not cleared.

For the association between module names and channel numbers, see Figure 20.2.

CCLRn bits (Channel n GTCNT Count Clear (n = 0 to 5))

When the counting direction flag is set for decrement (GTST.TUCF flag = 0) with saw-wave mode selected in the GTCR.MD[2:0] bits, the value of the GTCNT counter becomes that of the corresponding GTPR register in response to writing 1 to the CCLRn bit. The value of the counter becomes 0x0000 0000 with other settings. These bits are read as 0.

20.2.5 GTSSR : General PWM Timer Start Source Select Register

Base address: GPT32n = 0x4016_9000 + 0x0100 × n (n = 0, 1)
GPT16m = 0x4016_9000 + 0x0100 × m (m = 2 to 5)

Offset address: 0x10

Bit position:	31	30	29	28	27	26	25	24	23	22	21	20	19	18	17	16
Bit field:	CSTRT	—	—	—	—	—	—	—	SSELCH	SSELCG	SSELCF	SSELCE	SSELCD	SSELCC	SSELCB	SSELCA
Value after reset:	0	0	0	0	0	0	0	0	0	0	0	0	0	0	0	0

Bit position:	15	14	13	12	11	10	9	8	7	6	5	4	3	2	1	0
Bit field:	SSCBFAH	SSCBFAL	SSCBRAH	SSCBRAL	SSCAFBH	SSCAFBL	SSCARBH	SSCARBL	SSGTRGDF	SSGTRGDR	SSGTRGCF	SSGTRGCR	SSGTRGBF	SSGTRGBR	SSGTRGAF	SSGTRGAR
Value after reset:	0	0	0	0	0	0	0	0	0	0	0	0	0	0	0	0

Bit	Symbol	Function	R/W
0	SSGTRGAR	GTETRGA Pin Rising Input Source Counter Start Enable 0: Counter start disabled on the rising edge of GTETRGA input 1: Counter start enabled on the rising edge of GTETRGA input	R/W
1	SSGTRGAF	GTETRGA Pin Falling Input Source Counter Start Enable 0: Counter start disabled on the falling edge of GTETRGA input 1: Counter start enabled on the falling edge of GTETRGA input	R/W
2	SSGTRGBR	GTETRGB Pin Rising Input Source Counter Start Enable 0: Counter start disabled on the rising edge of GTETRGB input 1: Counter start enabled on the rising edge of GTETRGB input	R/W
3	SSGTRGBF	GTETRGB Pin Falling Input Source Counter Start Enable 0: Counter start disabled on the falling edge of GTETRGB input 1: Counter start enabled on the falling edge of GTETRGB input	R/W
4	SSGTRGCR	GTETRGC Pin Rising Input Source Counter Start Enable 0: Counter start disabled on the rising edge of GTETRGC input 1: Counter start enabled on the rising edge of GTETRGC input	R/W
5	SSGTRGCF	GTETRGC Pin Falling Input Source Counter Start Enable 0: Counter start disabled on the falling edge of GTETRGC input 1: Counter start enabled on the falling edge of GTETRGC input	R/W
6	SSGTRGDR	GTETRGD Pin Rising Input Source Counter Start Enable 0: Counter start disabled on the rising edge of GTETRGD input 1: Counter start enabled on the rising edge of GTETRGD input	R/W
7	SSGTRGDF	GTETRGD Pin Falling Input Source Counter Start Enable 0: Counter start disabled on the falling edge of GTETRGD input 1: Counter start enabled on the falling edge of GTETRGD input	R/W
8	SSCARBL	GTIOCnA Pin Rising Input during GTIOCnB Value Low Source Counter Start Enable 0: Counter start disabled on the rising edge of GTIOCnA input when GTIOCnB input is 0 1: Counter start enabled on the rising edge of GTIOCnA input when GTIOCnB input is 0	R/W
9	SSCARBH	GTIOCnA Pin Rising Input during GTIOCnB Value High Source Counter Start Enable 0: Counter start disabled on the rising edge of GTIOCnA input when GTIOCnB input is 1 1: Counter start enabled on the rising edge of GTIOCnA input when GTIOCnB input is 1	R/W
10	SSCAFBL	GTIOCnA Pin Falling Input during GTIOCnB Value Low Source Counter Start Enable 0: Counter start disabled on the falling edge of GTIOCnA input when GTIOCnB input is 0 1: Counter start enabled on the falling edge of GTIOCnA input when GTIOCnB input is 0	R/W
11	SSCAFBH	GTIOCnA Pin Falling Input during GTIOCnB Value High Source Counter Start Enable 0: Counter start disabled on the falling edge of GTIOCnA input when GTIOCnB input is 1 1: Counter start enabled on the falling edge of GTIOCnA input when GTIOCnB input is 1	R/W
12	SSCBRAL	GTIOCnB Pin Rising Input during GTIOCnA Value Low Source Counter Start Enable 0: Counter start disabled on the rising edge of GTIOCnB input when GTIOCnA input is 0 1: Counter start enabled on the rising edge of GTIOCnB input when GTIOCnA input is 0	R/W
13	SSCBRAH	GTIOCnB Pin Rising Input during GTIOCnA Value High Source Counter Start Enable 0: Counter start disabled on the rising edge of GTIOCnB input when GTIOCnA input is 1 1: Counter start enabled on the rising edge of GTIOCnB input when GTIOCnA input is 1	R/W

Bit	Symbol	Function	R/W
14	SSCBFAL	GTIOCnB Pin Falling Input during GTIOCnA Value Low Source Counter Start Enable 0: Counter start disabled on the falling edge of GTIOCnB input when GTIOCnA input is 0 1: Counter start enabled on the falling edge of GTIOCnB input when GTIOCnA input is 0	R/W
15	SSCBFAH	GTIOCnB Pin Falling Input during GTIOCnA Value High Source Counter Start Enable 0: Counter start disabled on the falling edge of GTIOCnB input when GTIOCnA input is 1 1: Counter start enabled on the falling edge of GTIOCnB input when GTIOCnA input is 1	R/W
16	SSELCA	ELC_GPTA Event Source Counter Start Enable 0: Counter start disabled at the ELC_GPTA input 1: Counter start enabled at the ELC_GPTA input	R/W
17	SSELCB	ELC_GPTB Event Source Counter Start Enable 0: Counter start disabled at the ELC_GPTB input 1: Counter start enabled at the ELC_GPTB input	R/W
18	SSELCC	ELC_GPTC Event Source Counter Start Enable 0: Counter start disabled at the ELC_GPTC input 1: Counter start enabled at the ELC_GPTC input	R/W
19	SSELCD	ELC_GPTD Event Source Counter Start Enable 0: Counter start disabled at the ELC_GPTD input 1: Counter start enabled at the ELC_GPTD input	R/W
20	SSELCE	ELC_GPTE Event Source Counter Start Enable 0: Counter start disabled at the ELC_GPTE input 1: Counter start enabled at the ELC_GPTE input	R/W
21	SSELCF	ELC_GPTF Event Source Counter Start Enable 0: Counter start disabled at the ELC_GPTF input 1: Counter start enabled at the ELC_GPTF input	R/W
22	SSELCG	ELC_GPTG Event Source Counter Start Enable 0: Counter start disabled at the ELC_GPTG input 1: Counter start enabled at the ELC_GPTG input	R/W
23	SSELCH	ELC_GPTH Event Source Counter Start Enable 0: Counter start disabled at the ELC_GPTH input 1: Counter start enabled at the ELC_GPTH input	R/W
30:24	—	These bits are read as 0. The write value should be 0.	R/W
31	CSTRT	Software Source Counter Start Enable 0: Counter start disabled by the GTSTR register 1: Counter start enabled by the GTSTR register	R/W

The GTSSR sets the source to start the GTCNT counter.

Input from GTETRGn (n = A to D) pins are input to the GPT through the POEG. Set the polarity of these signals with the POEG.

SSGTRGAR bit (GTETRGA Pin Rising Input Source Counter Start Enable)

The SSGTRGAR bit enables or disables the GTCNT counter start on the rising edge of the GTETRGA pin input.

SSGTRGAF bit (GTETRGA Pin Falling Input Source Counter Start Enable)

The SSGTRGAF bit enables or disables the GTCNT counter start on the falling edge of the GTETRGA pin input.

SSGTRGBR bit (GTETRGB Pin Rising Input Source Counter Start Enable)

The SSGTRGBR bit enables or disables the GTCNT counter start on the rising edge of the GTETRGB pin input.

SSGTRGBF bit (GTETRGB Pin Falling Input Source Counter Start Enable)

The SSGTRGBF bit enables or disables the GTCNT counter start on the falling edge of the GTETRGB pin input.

SSGTRGCR bit (GTETRGC Pin Rising Input Source Counter Start Enable)

The SSGTRGCR bit enables or disables the GTCNT counter start on the rising edge of the GTETRGC pin input.

SSGTRGCF bit (GTETRGC Pin Falling Input Source Counter Start Enable)

The SSGTRGCF bit enables or disables the GTCNT counter start on the falling edge of the GTETRGC pin input.

SSGTRGDR bit (GTETRGD Pin Rising Input Source Counter Start Enable)

The SSGTRGDR bit enables or disables the GTCNT counter start on the rising edge of the GTETRGD pin input.

SSGTRGDF bit (GTETRGD Pin Falling Input Source Counter Start Enable)

The SSGTRGDF bit enables or disables the GTCNT counter start on the falling edge of the GTETRGD pin input.

SSCARBL bit (GTIOCnA Pin Rising Input during GTIOCnB Value Low Source Counter Start Enable)

The SSCARBL bit enables or disables the GTCNT counter start on the rising edge of the GTIOCnA pin input, when GTIOCnB input is 0.

SSCARBH bit (GTIOCnA Pin Rising Input during GTIOCnB Value High Source Counter Start Enable)

The SSCARBH bit enables or disables the GTCNT counter start on the rising edge of the GTIOCnA pin input, when GTIOCnB input is 1.

SSCAFBL bit (GTIOCnA Pin Falling Input during GTIOCnB Value Low Source Counter Start Enable)

The SSCAFBL bit enables or disables the GTCNT counter start on the falling edge of the GTIOCnA pin input, when GTIOCnB input is 0.

SSCAFBH bit (GTIOCnA Pin Falling Input during GTIOCnB Value High Source Counter Start Enable)

The SSCAFBH bit enables or disables the GTCNT counter start on the falling edge of the GTIOCnA pin input, when GTIOCnB input is 1.

SSCBRAL bit (GTIOCnB Pin Rising Input during GTIOCnA Value Low Source Counter Start Enable)

The SSCBRAL bit enables or disables the GTCNT counter start on the rising edge of the GTIOCnB pin input, when GTIOCnA input is 0.

SSCBRAH bit (GTIOCnB Pin Rising Input during GTIOCnA Value High Source Counter Start Enable)

The SSCBRAH bit enables or disables the GTCNT counter start on the rising edge of the GTIOCnB pin input, when GTIOCnA input is 1.

SSCBFAL bit (GTIOCnB Pin Falling Input during GTIOCnA Value Low Source Counter Start Enable)

The SSCBFAL bit enables or disables the GTCNT counter start on the falling edge of the GTIOCnB pin input, when GTIOCnA input is 0.

SSCBFAH bit (GTIOCnB Pin Falling Input during GTIOCnA Value High Source Counter Start Enable)

The SSCBFAH bit enables or disables the GTCNT counter start on the falling edge of the GTIOCnB pin input, when GTIOCnA input is 1.

SSELCm bit (ELC_GPTm Event Source Counter Start Enable) (m = A to H)

The SSELCm bit enables or disables the GTCNT counter start at the ELC_GPTm event input.

CSTRT bit (Software Source Counter Start Enable)

The CSTRT bit enables or disables the GTCNT counter start by GTSTR register.

20.2.6 GTPSR : General PWM Timer Stop Source Select Register

Base address: GPT32n = 0x4016_9000 + 0x0100 × n (n = 0, 1)
GPT16m = 0x4016_9000 + 0x0100 × m (m = 2 to 5)

Offset address: 0x14

Bit position:	31	30	29	28	27	26	25	24	23	22	21	20	19	18	17	16
Bit field:	CSTOP	—	—	—	—	—	—	—	PSELCH	PSELCG	PSELCF	PSELCE	PSELCD	PSELCC	PSELCB	PSELCA
Value after reset:	0	0	0	0	0	0	0	0	0	0	0	0	0	0	0	0

Bit position:	15	14	13	12	11	10	9	8	7	6	5	4	3	2	1	0
Bit field:	PSCBFAH	PSCBFAL	PSCBRAH	PSCBRAL	PSCAFBH	PSCAFBL	PSCARBH	PSCARBL	PSGTRGDF	PSGTRGDR	PSGTRGCF	PSGTRGCR	PSGTRGBF	PSGTRGBR	PSGTRGAF	PSGTRGAR
Value after reset:	0	0	0	0	0	0	0	0	0	0	0	0	0	0	0	0

Bit	Symbol	Function	R/W
0	PSGTRGAR	GTETRGA Pin Rising Input Source Counter Stop Enable 0: Counter stop disabled on the rising edge of GTETRGA input 1: Counter stop enabled on the rising edge of GTETRGA input	R/W
1	PSGTRGAF	GTETRGA Pin Falling Input Source Counter Stop Enable 0: Counter stop disabled on the falling edge of GTETRGA input 1: Counter stop enabled on the falling edge of GTETRGA input	R/W
2	PSGTRGBR	GTETRGB Pin Rising Input Source Counter Stop Enable 0: Counter stop disabled on the rising edge of GTETRGB input 1: Counter stop enabled on the rising edge of GTETRGB input	R/W
3	PSGTRGBF	GTETRGB Pin Falling Input Source Counter Stop Enable 0: Counter stop disabled on the falling edge of GTETRGB input 1: Counter stop enabled on the falling edge of GTETRGB input	R/W
4	PSGTRGCR	GTETRGC Pin Rising Input Source Counter Stop Enable 0: Counter stop disabled on the rising edge of GTETRGC input 1: Counter stop enabled on the rising edge of GTETRGC input	R/W
5	PSGTRGCF	GTETRGC Pin Falling Input Source Counter Stop Enable 0: Counter stop disabled on the falling edge of GTETRGC input 1: Counter stop enabled on the falling edge of GTETRGC input	R/W
6	PSGTRGDR	GTETRGD Pin Rising Input Source Counter Stop Enable 0: Counter stop disabled on the rising edge of GTETRGD input 1: Counter stop enabled on the rising edge of GTETRGD input	R/W
7	PSGTRGDF	GTETRGD Pin Falling Input Source Counter Stop Enable 0: Counter stop disabled on the falling edge of GTETRGD input 1: Counter stop enabled on the falling edge of GTETRGD input	R/W
8	PSCARBL	GTIOCnA Pin Rising Input during GTIOCnB Value Low Source Counter Stop Enable 0: Counter stop disabled on the rising edge of GTIOCnA input when GTIOCnB input is 0 1: Counter stop enabled on the rising edge of GTIOCnA input when GTIOCnB input is 0	R/W
9	PSCARBH	GTIOCnA Pin Rising Input during GTIOCnB Value High Source Counter Stop Enable 0: Counter stop disabled on the rising edge of GTIOCnA input when GTIOCnB input is 1 1: Counter stop enabled on the rising edge of GTIOCnA input when GTIOCnB input is 1	R/W
10	PSCAFBL	GTIOCnA Pin Falling Input during GTIOCnB Value Low Source Counter Stop Enable 0: Counter stop disabled on the falling edge of GTIOCnA input when GTIOCnB input is 0 1: Counter stop enabled on the falling edge of GTIOCnA input when GTIOCnB input is 0	R/W

Bit	Symbol	Function	R/W
11	PSCAFBH	GTIOCnA Pin Falling Input during GTIOCnB Value High Source Counter Stop Enable 0: Counter stop disabled on the falling edge of GTIOCnA input when GTIOCnB input is 1 1: Counter stop enabled on the falling edge of GTIOCnA input when GTIOCnB input is 1	R/W
12	PSCBRAL	GTIOCnB Pin Rising Input during GTIOCnA Value Low Source Counter Stop Enable 0: Counter stop disabled on the rising edge of GTIOCnB input when GTIOCnA input is 0 1: Counter stop enabled on the rising edge of GTIOCnB input when GTIOCnA input is 0	R/W
13	PSCBRAH	GTIOCnB Pin Rising Input during GTIOCnA Value High Source Counter Stop Enable 0: Counter stop disabled on the rising edge of GTIOCnB input when GTIOCnA input is 1 1: Counter stop enabled on the rising edge of GTIOCnB input when GTIOCnA input is 1	R/W
14	PSCBFAL	GTIOCnB Pin Falling Input during GTIOCnA Value Low Source Counter Stop Enable 0: Counter stop disabled on the falling edge of GTIOCnB input when GTIOCnA input is 0 1: Counter stop enabled on the falling edge of GTIOCnB input when GTIOCnA input is 0	R/W
15	PSCBFAH	GTIOCnB Pin Falling Input during GTIOCnA Value High Source Counter Stop Enable 0: Counter stop disabled on the falling edge of GTIOCnB input when GTIOCnA input is 1 1: Counter stop enabled on the falling edge of GTIOCnB input when GTIOCnA input is 1	R/W
16	PSELCA	ELC_GPTA Event Source Counter Stop Enable 0: Counter stop disabled at the ELC_GPTA input 1: Counter stop enabled at the ELC_GPTA input	R/W
17	PSELCB	ELC_GPTB Event Source Counter Stop Enable 0: Counter stop disabled at the ELC_GPTB input 1: Counter stop enabled at the ELC_GPTB input	R/W
18	PSELCC	ELC_GPTC Event Source Counter Stop Enable 0: Counter stop disabled at the ELC_GPTC input 1: Counter stop enabled at the ELC_GPTC input	R/W
19	PSELCD	ELC_GPTD Event Source Counter Stop Enable 0: Counter stop disabled at the ELC_GPTD input 1: Counter stop enabled at the ELC_GPTD input	R/W
20	PSELCE	ELC_GPTE Event Source Counter Stop Enable 0: Counter stop disabled at the ELC_GPTE input 1: Counter stop enabled at the ELC_GPTE input	R/W
21	PSELCF	ELC_GPTF Event Source Counter Stop Enable 0: Counter stop disabled at the ELC_GPTF input 1: Counter stop enabled at the ELC_GPTF input	R/W
22	PSELCG	ELC_GPTG Event Source Counter Stop Enable 0: Counter stop disabled at the ELC_GPTG input 1: Counter stop enabled at the ELC_GPTG input	R/W
23	PSELCH	ELC_GPTH Event Source Counter Stop Enable 0: Counter stop disabled at the ELC_GPTH input 1: Counter stop enabled at the ELC_GPTH input	R/W
30:24	—	These bits are read as 0. The write value should be 0.	R/W
31	CSTOP	Software Source Counter Stop Enable 0: Counter stop disabled by the GTSTP register 1: Counter stop enabled by the GTSTP register	R/W

The GTPSR sets the source to stop the GTCNT counter.

Inputs from GTETRGn (n = A to D) pins are input to the GPT through the POEG. Set the polarity of these signals with the POEG.

PSGTRGAR bit (GTETRGA Pin Rising Input Source Counter Stop Enable)

The PSGTRGAR bit enables or disables the GTCNT counter stop on the rising edge of the GTETRGA pin input.

PSGTRGAF bit (GTETRGA Pin Falling Input Source Counter Stop Enable)

The PSGTRGAF bit enables or disables the GTCNT counter stop on the falling edge of the GTETRGA pin input.

PSGTRGBR bit (GTETRGB Pin Rising Input Source Counter Stop Enable)

PSGTRGBR bit enables or disables the GTCNT counter stop on the rising edge of the GTETRGB pin input.

PSGTRGBF bit (GTETRGB Pin Falling Input Source Counter Stop Enable)

The PSGTRGBF bit enables or disables the GTCNT counter stop on the falling edge of the GTETRGB pin input.

PSGTRGCR bit (GTETRGC Pin Rising Input Source Counter Stop Enable)

PSGTRGCR bit enables or disables the GTCNT counter stop on the rising edge of the GTETRGC pin input.

PSGTRGCF bit (GTETRGC Pin Falling Input Source Counter Stop Enable)

The PSGTRGCF bit enables or disables the GTCNT counter stop on the falling edge of the GTETRGC pin input.

PSGTRGDR bit (GTETRGD Pin Rising Input Source Counter Stop Enable)

PSGTRGDR bit enables or disables the GTCNT counter stop on the rising edge of the GTETRGD pin input.

PSGTRGDF bit (GTETRGD Pin Falling Input Source Counter Stop Enable)

The PSGTRGDF bit enables or disables the GTCNT counter stop on the falling edge of the GTETRGD pin input.

PSCARBL bit (GTIOCnA Pin Rising Input during GTIOCnB Value Low Source Counter Stop Enable)

The PSCARBL bit enables or disables the GTCNT counter stop on the rising edge of the GTIOCnA pin input, when GTIOCnB input is 0.

PSCARBH bit (GTIOCnA Pin Rising Input during GTIOCnB Value High Source Counter Stop Enable)

The PSCARBH bit enables or disables the GTCNT counter stop on the rising edge of the GTIOCnA pin input, when GTIOCnB input is 1.

PSCAFBL bit (GTIOCnA Pin Falling Input during GTIOCnB Value Low Source Counter Stop Enable)

The PSCAFBL bit enables or disables the GTCNT counter stop on the falling edge of the GTIOCnA pin input, when GTIOCnB input is 0.

PSCAFBH bit (GTIOCnA Pin Falling Input during GTIOCnB Value High Source Counter Stop Enable)

The PSCAFBH bit enables or disables the GTCNT counter stop on the falling edge of the GTIOCnA pin input, when GTIOCnB input is 1.

PSCBRAL bit (GTIOCnB Pin Rising Input during GTIOCnA Value Low Source Counter Stop Enable)

The PSCBRAL bit enables or disables the GTCNT counter stop on the rising edge of the GTIOCnB pin input, when GTIOCnA input is 0.

PSCBRAH bit (GTIOCnB Pin Rising Input during GTIOCnA Value High Source Counter Stop Enable)

The PSCBRAH bit enables or disables the GTCNT counter stop on the rising edge of the GTIOCnB pin input, when GTIOCnA input is 1.

PSCBFAL bit (GTIOCnB Pin Falling Input during GTIOCnA Value Low Source Counter Stop Enable)

The PSCBFAL bit enables or disables the GTCNT counter stop on the falling edge of the GTIOCnB pin input, when GTIOCnA input is 0.

PSCBFAH bit (GTIOCnB Pin Falling Input during GTIOCnA Value High Source Counter Stop Enable)

The PSCBFAH bit enables or disables the GTCNT counter stop on the falling edge of the GTIOCnB pin input, when GTIOCnA input is 1.

PSELCm bit (ELCm Event Source Counter Stop Enable) (m = A to H)

The PSELCm bit enables or disables the GTCNT counter stop at the ELC_GPTm event input.

CSTOP bit (Software Source Counter Stop Enable)

The CSTOP bit enables or disables the GTCNT counter stop by the GTSTP register.

20.2.7 GTCSR : General PWM Timer Clear Source Select Register

Base address: GPT32n = 0x4016_9000 + 0x0100 × n (n = 0, 1)
GPT16m = 0x4016_9000 + 0x0100 × m (m = 2 to 5)

Offset address: 0x18

Bit position:	31	30	29	28	27	26	25	24	23	22	21	20	19	18	17	16
Bit field:	CCLR	—	—	—	—	—	—	—	CSELCH	CSELCG	CSELCF	CSELCE	CSELCD	CSELCC	CSELCB	CSELCA
Value after reset:	0	0	0	0	0	0	0	0	0	0	0	0	0	0	0	0

Bit position:	15	14	13	12	11	10	9	8	7	6	5	4	3	2	1	0
Bit field:	CSCBFAH	CSCBFAL	CSCBRAH	CSCBRAL	CSCAFBH	CSCAFBL	CSCARBH	CSCARBL	CSGTRGDF	CSGTRGDR	CSGTRGCF	CSGTRGCR	CSGTRGBF	CSGTRGBR	CSGTRGAF	CSGTRGAR
Value after reset:	0	0	0	0	0	0	0	0	0	0	0	0	0	0	0	0

Bit	Symbol	Function	R/W
0	CSGTRGAR	GTETRGA Pin Rising Input Source Counter Clear Enable 0: Counter clear disabled on the rising edge of GTETRGA input 1: Counter clear enabled on the rising edge of GTETRGA input	R/W
1	CSGTRGAF	GTETRGA Pin Falling Input Source Counter Clear Enable 0: Counter clear disabled on the falling edge of GTETRGA input 1: Counter clear enabled on the falling edge of GTETRGA input	R/W
2	CSGTRGBR	GTETRGB Pin Rising Input Source Counter Clear Enable 0: Disable counter clear on the rising edge of GTETRGB input 1: Enable counter clear on the rising edge of GTETRGB input	R/W
3	CSGTRGBF	GTETRGB Pin Falling Input Source Counter Clear Enable 0: Counter clear disabled on the falling edge of GTETRGB input 1: Counter clear enabled on the falling edge of GTETRGB input	R/W
4	CSGTRGCR	GTETRGC Pin Rising Input Source Counter Clear Enable 0: Disable counter clear on the rising edge of GTETRGC input 1: Enable counter clear on the rising edge of GTETRGC input	R/W
5	CSGTRGCF	GTETRGC Pin Falling Input Source Counter Clear Enable 0: Counter clear disabled on the falling edge of GTETRGC input 1: Counter clear enabled on the falling edge of GTETRGC input	R/W
6	CSGTRGDR	GTETRGD Pin Rising Input Source Counter Clear Enable 0: Disable counter clear on the rising edge of GTETRGD input 1: Enable counter clear on the rising edge of GTETRGD input	R/W
7	CSGTRGDF	GTETRGD Pin Falling Input Source Counter Clear Enable 0: Counter clear disabled on the falling edge of GTETRGD input 1: Counter clear enabled on the falling edge of GTETRGD input	R/W
8	CSCARBL	GTIOCnA Pin Rising Input during GTIOCnB Value Low Source Counter Clear Enable 0: Counter clear disabled on the rising edge of GTIOCnA input when GTIOCnB input is 0 1: Counter clear enabled on the rising edge of GTIOCnA input when GTIOCnB input is 0	R/W
9	CSCARBH	GTIOCnA Pin Rising Input during GTIOCnB Value High Source Counter Clear Enable 0: Counter clear disabled on the rising edge of GTIOCnA input when GTIOCnB input is 1 1: Counter clear enabled on the rising edge of GTIOCnA input when GTIOCnB input is 1	R/W

Bit	Symbol	Function	R/W
10	CSCAFBL	GTIOCnA Pin Falling Input during GTIOCnB Value Low Source Counter Clear Enable 0: Counter clear disabled on the falling edge of GTIOCnA input when GTIOCnB input is 0 1: Counter clear enabled on the falling edge of GTIOCnA input when GTIOCnB input is 0	R/W
11	CSCAFBH	GTIOCnA Pin Falling Input during GTIOCnB Value High Source Counter Clear Enable 0: Counter clear disabled on the falling edge of GTIOCnA input when GTIOCnB input is 1 1: Counter clear enabled on the falling edge of GTIOCnA input when GTIOCnB input is 1	R/W
12	CSCBRAL	GTIOCnB Pin Rising Input during GTIOCnA Value Low Source Counter Clear Enable 0: Counter clear disabled on the rising edge of GTIOCnB input when GTIOCnA input is 0 1: Counter clear enabled on the rising edge of GTIOCnB input when GTIOCnA input is 0	R/W
13	CSCBRAH	GTIOCnB Pin Rising Input during GTIOCnA Value High Source Counter Clear Enable 0: Counter clear disabled on the rising edge of GTIOCnB input when GTIOCnA input is 1 1: Counter clear enabled on the rising edge of GTIOCnB input when GTIOCnA input is 1	R/W
14	CSCBFAL	GTIOCnB Pin Falling Input during GTIOCnA Value Low Source Counter Clear Enable 0: Counter clear disabled on the falling edge of GTIOCnB input when GTIOCnA input is 0 1: Counter clear enabled on the falling edge of GTIOCnB input when GTIOCnA input is 0	R/W
15	CSCBFAH	GTIOCnB Pin Falling Input during GTIOCnA Value High Source Counter Clear Enable 0: Counter clear disabled on the falling edge of GTIOCnB input when GTIOCnA input is 1 1: Counter clear enabled on the falling edge of GTIOCnB input when GTIOCnA input is 1	R/W
16	CSELCA	ELC_GPTA Event Source Counter Clear Enable 0: Counter clear disabled at the ELC_GPTA input 1: Counter clear enabled at the ELC_GPTA input	R/W
17	CSELCB	ELC_GPTB Event Source Counter Clear Enable 0: Counter clear disabled at the ELC_GPTB input 1: Counter clear enabled at the ELC_GPTB input	R/W
18	CSELCC	ELC_GPTC Event Source Counter Clear Enable 0: Counter clear disabled at the ELC_GPTC input 1: Counter clear enabled at the ELC_GPTC input	R/W
19	CSELCD	ELC_GPTD Event Source Counter Clear Enable 0: Counter clear disabled at the ELC_GPTD input 1: Counter clear enabled at the ELC_GPTD input	R/W
20	CSELCE	ELC_GPTE Event Source Counter Clear Enable 0: Counter clear disabled at the ELC_GPTE input 1: Counter clear enabled at the ELC_GPTE input	R/W
21	CSELCF	ELC_GPTF Event Source Counter Clear Enable 0: Counter clear disabled at the ELC_GPTF input 1: Counter clear enabled at the ELC_GPTF input	R/W
22	CSELCG	ELC_GPTG Event Source Counter Clear Enable 0: Counter clear disabled at the ELC_GPTG input 1: Counter clear enabled at the ELC_GPTG input	R/W
23	CSELCH	ELC_GPTH Event Source Counter Clear Enable 0: Counter clear disabled at the ELC_GPTH input 1: Counter clear enabled at the ELC_GPTH input	R/W
30:24	—	These bits are read as 0. The write value should be 0.	R/W

Bit	Symbol	Function	R/W
31	CCLR	Software Source Counter Clear Enable 0: Counter clear disabled by the GTCLR register 1: Counter clear enabled by the GTCLR register	R/W

The GTCSR sets the source to clear the GTCNT counter.

Counter clearing can be executed whether the counter is running (GTCR.CST=1) or stopped (GTCR.CST=0).

Inputs from GTETRGn (n = A to D) pins are input to the GPT through the POEG. Set the polarity of these signals with the POEG.

CSGTRGAR bit (GTETRGA Pin Rising Input Source Counter Clear Enable)

The CSGTRGAR bit enables or disables the GTCNT counter clear on the rising edge of the GTETRGA pin input.

CSGTRGAF bit (GTETRGA Pin Falling Input Source Counter Clear Enable)

The CSGTRGAF bit enables or disables the GTCNT counter clear on the falling edge of the GTETRGA pin input.

CSGTRGBR bit (GTETRGB Pin Rising Input Source Counter Clear Enable)

The CSGTRGBR bit enables or disables the GTCNT counter clear on the rising edge of the GTETRGB pin input.

CSGTRGBF bit (GTETRGB Pin Falling Input Source Counter Clear Enable)

The CSGTRGBF bit enables or disables the GTCNT counter clear on the falling edge of the GTETRGB pin input.

CSGTRGCR bit (GTETRGC Pin Rising Input Source Counter Clear Enable)

The CSGTRGCR bit enables or disables the GTCNT counter clear on the rising edge of the GTETRGC pin input.

CSGTRGCF bit (GTETRGC Pin Falling Input Source Counter Clear Enable)

The CSGTRGCF bit enables or disables the GTCNT counter clear on the falling edge of the GTETRGC pin input.

CSGTRGDR bit (GTETRGD Pin Rising Input Source Counter Clear Enable)

The CSGTRGDR bit enables or disables the GTCNT counter clear on the rising edge of the GTETRGD pin input.

CSGTRGDF bit (GTETRGD Pin Falling Input Source Counter Clear Enable)

The CSGTRGDF bit enables or disables the GTCNT counter clear on the falling edge of the GTETRGD pin input.

CSCARBL bit (GTIOCnA Pin Rising Input during GTIOCnB Value Low Source Counter Clear Enable)

The CSCARBL bit enables or disables the GTCNT counter clear on the rising edge of the GTIOCnA pin input, when GTIOCnB input is 0.

CSCARBH bit (GTIOCnA Pin Rising Input during GTIOCnB Value High Source Counter Clear Enable)

The CSCARBH bit enables or disables the GTCNT counter clear on the rising edge of the GTIOCnA pin input, when GTIOCnB input is 1.

CSCAFBL bit (GTIOCnA Pin Falling Input during GTIOCnB Value Low Source Counter Clear Enable)

The CSCAFBL bit enables or disables the GTCNT counter clear on the falling edge of the GTIOCnA pin input, when GTIOCnB input is 0.

CSCAFBH bit (GTIOCnA Pin Falling Input during GTIOCnB Value High Source Counter Clear Enable)

The CSCAFBH bit enables or disables the GTCNT counter clear on the falling edge of the GTIOCnA pin input, when GTIOCnB input is 1.

CSCBRAL bit (GTIOCnB Pin Rising Input during GTIOCnA Value Low Source Counter Clear Enable)

The CSCBRAL bit enables or disables the GTCNT counter clear on the rising edge of the GTIOCnB pin input, when GTIOCnA input is 0.

CSCBRAH bit (GTIOCnB Pin Rising Input during GTIOCnA Value High Source Counter Clear Enable)

The CSCBRAH bit enables or disables the GTCNT counter clear on the rising edge of the GTIOCnB pin input, when GTIOCnA input is 1.

CSCBFAL bit (GTIOCnB Pin Falling Input during GTIOCnA Value Low Source Counter Clear Enable)

The CSCBFAL bit enables or disables the GTCNT counter clear on the falling edge of the GTIOCnB pin input, when GTIOCnA input is 0.

CSCBFAH bit (GTIOCnB Pin Falling Input during GTIOCnA Value High Source Counter Clear Enable)

The CSCBFAH bit enables or disables the GTCNT counter clear on the falling edge of the GTIOCnB pin input, when GTIOCnA input is 1.

CSELCm bit (ELCm Event Source Counter Clear Enable) (m = A to H)

The CSELCm bit enables or disables the GTCNT counter clear at the ELC_GPTm event input.

CCLR bit (Software Source Counter Clear Enable)

The CCLR bit enables or disables the GTCNT counter clear by the GTCLR register.

20.2.8 GTUPSR : General PWM Timer Up Count Source Select Register

Base address: GPT32n = 0x4016_9000 + 0x0100 × n (n = 0, 1)
GPT16m = 0x4016_9000 + 0x0100 × m (m = 2 to 5)

Offset address: 0x1C

Bit position:	31	30	29	28	27	26	25	24	23	22	21	20	19	18	17	16
Bit field:	—	—	—	—	—	—	—	—	USELCH	USELCG	USELCF	USELCE	USELCD	USELCC	USELCB	USELCA
Value after reset:	0	0	0	0	0	0	0	0	0	0	0	0	0	0	0	0

Bit position:	15	14	13	12	11	10	9	8	7	6	5	4	3	2	1	0
Bit field:	USCBFAH	USCBFAL	USCBRAH	USCBRAL	USCAFBH	USCAFBL	USCARBH	USCARBL	USGTRGDF	USGTRGDR	USGTRGCF	USGTRGCR	USGTRGBF	USGTRGBR	USGTRGAF	USGTRGAR
Value after reset:	0	0	0	0	0	0	0	0	0	0	0	0	0	0	0	0

Bit	Symbol	Function	R/W
0	USGTRGAR	GTETRGA Pin Rising Input Source Counter Count Up Enable 0: Counter count up disabled on the rising edge of GTETRGA input 1: Counter count up enabled on the rising edge of GTETRGA input	R/W
1	USGTRGAF	GTETRGA Pin Falling Input Source Counter Count Up Enable 0: Counter count up disabled on the falling edge of GTETRGA input 1: Counter count up enabled on the falling edge of GTETRGA input	R/W
2	USGTRGBR	GTETRGB Pin Rising Input Source Counter Count Up Enable 0: Counter count up disabled on the rising edge of GTETRGB input 1: Counter count up enabled on the rising edge of GTETRGB input	R/W
3	USGTRGBF	GTETRGB Pin Falling Input Source Counter Count Up Enable 0: Counter count up disabled on the falling edge of GTETRGB input 1: Counter count up enabled on the falling edge of GTETRGB input	R/W
4	USGTRGCR	GTETRGC Pin Rising Input Source Counter Count Up Enable 0: Counter count up disabled on the rising edge of GTETRGC input 1: Counter count up enabled on the rising edge of GTETRGC input	R/W
5	USGTRGCF	GTETRGC Pin Falling Input Source Counter Count Up Enable 0: Counter count up disabled on the falling edge of GTETRGC input 1: Counter count up enabled on the falling edge of GTETRGC input	R/W
6	USGTRGDR	GTETRGD Pin Rising Input Source Counter Count Up Enable 0: Counter count up disabled on the rising edge of GTETRGD input 1: Counter count up enabled on the rising edge of GTETRGD input	R/W

Bit	Symbol	Function	R/W
7	USGTRGDF	GTETRGD Pin Falling Input Source Counter Count Up Enable 0: Counter count up disabled on the falling edge of GTETRGD input 1: Counter count up enabled on the falling edge of GTETRGD input	R/W
8	USCARBL	GTIOCnA Pin Rising Input during GTIOCnB Value Low Source Counter Count Up Enable 0: Counter count up disabled on the rising edge of GTIOCnA input when GTIOCnB input is 0 1: Counter count up enabled on the rising edge of GTIOCnA input when GTIOCnB input is 0	R/W
9	USCARBH	GTIOCnA Pin Rising Input during GTIOCnB Value High Source Counter Count Up Enable 0: Counter count up disabled on the rising edge of GTIOCnA input when GTIOCnB input is 1 1: Counter count up enabled on the rising edge of GTIOCnA input when GTIOCnB input is 1	R/W
10	USCAFBL	GTIOCnA Pin Falling Input during GTIOCnB Value Low Source Counter Count Up Enable 0: Counter count up disabled on the falling edge of GTIOCnA input when GTIOCnB input is 0 1: Counter count up enabled on the falling edge of GTIOCnA input when GTIOCnB input is 0	R/W
11	USCAFBH	GTIOCnA Pin Falling Input during GTIOCnB Value High Source Counter Count Up Enable 0: Counter count up disabled on the falling edge of GTIOCnA input when GTIOCnB input is 1 1: Counter count up enabled on the falling edge of GTIOCnA input when GTIOCnB input is 1	R/W
12	USCBRAL	GTIOCnB Pin Rising Input during GTIOCnA Value Low Source Counter Count Up Enable 0: Counter count up disabled on the rising edge of GTIOCnB input when GTIOCnA input is 0 1: Counter count up enabled on the rising edge of GTIOCnB input when GTIOCnA input is 0	R/W
13	USCBRAH	GTIOCnB Pin Rising Input during GTIOCnA Value High Source Counter Count Up Enable 0: Counter count up disabled on the rising edge of GTIOCnB input when GTIOCnA input is 1 1: Counter count up enabled on the rising edge of GTIOCnB input when GTIOCnA input is 1	R/W
14	USCBFAL	GTIOCnB Pin Falling Input during GTIOCnA Value Low Source Counter Count Up Enable 0: Counter count up disabled on the falling edge of GTIOCnB input when GTIOCnA input is 0 1: Counter count up enabled on the falling edge of GTIOCnB input when GTIOCnA input is 0	R/W
15	USCBFAH	GTIOCnB Pin Falling Input during GTIOCnA Value High Source Counter Count Up Enable 0: Counter count up disabled on the falling edge of GTIOCnB input when GTIOCnA input is 1 1: Counter count up enabled on the falling edge of GTIOCnB input when GTIOCnA input is 1	R/W
16	USELCA	ELC_GPTA Event Source Counter Count Up Enable 0: Counter count up disabled at the ELC_GPTA input 1: Counter count up enabled at the ELC_GPTA input	R/W
17	USELCB	ELC_GPTB Event Source Counter Count Up Enable 0: Counter count up disabled at the ELC_GPTB input 1: Counter count up enabled at the ELC_GPTB input	R/W
18	USELCC	ELC_GPTC Event Source Counter Count Up Enable 0: Counter count up disabled at the ELC_GPTC input 1: Counter count up enabled at the ELC_GPTC input	R/W
19	USELCD	ELC_GPTD Event Source Counter Count Up Enable 0: Counter count up disabled at the ELC_GPTD input 1: Counter count up enabled at the ELC_GPTD input	R/W
20	USELCE	ELC_GPTE Event Source Counter Count Up Enable 0: Counter count up disabled at the ELC_GPTE input 1: Counter count up enabled at the ELC_GPTE input	R/W

Bit	Symbol	Function	R/W
21	USELCF	ELC_GPTF Event Source Counter Count Up Enable 0: Counter count up disabled at the ELC_GPTF input 1: Counter count up enabled at the ELC_GPTF input	R/W
22	USELCG	ELC_GPTG Event Source Counter Count Up Enable 0: Counter count up disabled at the ELC_GPTG input 1: Counter count up enabled at the ELC_GPTG input	R/W
23	USELCH	ELC_GPTH Event Source Counter Count Up Enable 0: Counter count up disabled at the ELC_GPTH input 1: Counter count up enabled at the ELC_GPTH input	R/W
31:24	—	These bits are read as 0. The write value should be 0.	R/W

The GTUPSR sets the source to count up the GTCNT counter.

When at least one bit in the GTUPSR register is set to 1, the GTCNT counter is counted up by the source that is set to 1 in this register. In this case, GTCR.TPCS has no effect.

Number of increment in counting is one even when multiple sources are generated simultaneously.

Inputs from GTETRGn (n = A to D) pins are input to the GPT through the POEG. Set the polarity of these signals with the POEG.

USGTRGAR bit (GTETRGA Pin Rising Input Source Counter Count Up Enable)

The USGTRGAR bit enables or disables the GTCNT counter count up on the rising edge of the GTETRGA pin input.

USGTRGAF bit (GTETRGA Pin Falling Input Source Counter Count Up Enable)

The USGTRGAF bit enables or disables the GTCNT counter count up on the falling edge of the GTETRGA pin input.

USGTRGBR bit (GTETRGB Pin Rising Input Source Counter Count Up Enable)

The USGTRGBR bit enables or disables the GTCNT counter count up on the rising edge of the GTETRGB pin input.

USGTRGBF bit (GTETRGB Pin Falling Input Source Counter Count Up Enable)

The USGTRGBF bit enables or disables the GTCNT counter count up on the falling edge of the GTETRGB pin input.

USGTRGCR bit (GTETRGC Pin Rising Input Source Counter Count Up Enable)

The USGTRGCR bit enables or disables the GTCNT counter count up on the rising edge of the GTETRGC pin input.

USGTRGCF bit (GTETRGC Pin Falling Input Source Counter Count Up Enable)

The USGTRGCF bit enables or disables the GTCNT counter count up on the falling edge of the GTETRGC pin input.

USGTRGDR bit (GTETRGD Pin Rising Input Source Counter Count Up Enable)

The USGTRGDR bit enables or disables the GTCNT counter count up on the rising edge of the GTETRGD pin input.

USGTRGDF bit (GTETRGD Pin Falling Input Source Counter Count Up Enable)

The USGTRGDF bit enables or disables the GTCNT counter count up on the falling edge of the GTETRGD pin input.

USCARBL bit (GTIOCnA Pin Rising Input during GTIOCnB Value Low Source Counter Count Up Enable)

The USCARBL bit enables or disables GTCNT counter count up on the rising edge of GTIOCnA pin input, when GTIOCnB input is 0.

USCARBH bit (GTIOCnA Pin Rising Input during GTIOCnB Value High Source Counter Count Up Enable)

The USCARBH bit enables or disables the GTCNT counter count up on the rising edge of the GTIOCnA pin input, when GTIOCnB input is 1.

USCAFBL bit (GTIOCnA Pin Falling Input during GTIOCnB Value Low Source Counter Count Up Enable)

The USCAFBL bit enables or disables the GTCNT counter count up on the falling edge of the GTIOCnA pin input, when GTIOCnB input is 0.

USCAFBH bit (GTIOCnA Pin Falling Input during GTIOCnB Value High Source Counter Count Up Enable)

The USCAFBH bit enables or disables the GTCNT counter count up on the falling edge of the GTIOCnA pin input, when GTIOCnB input is 1.

USCBRAL bit (GTIOCnB Pin Rising Input during GTIOCnA Value Low Source Counter Count Up Enable)

The USCBRAL bit enables or disables the GTCNT counter count up on the rising edge of the GTIOCnB pin input, when GTIOCnA input is 0.

USCBRAH bit (GTIOCnB Pin Rising Input during GTIOCnA Value High Source Counter Count Up Enable)

The USCBRAH bit enables or disables the GTCNT counter count up on the rising edge of the GTIOCnB pin input, when the GTIOCnA input is 1.

USCBFAL bit (GTIOCnB Pin Falling Input during GTIOCnA Value Low Source Counter Count Up Enable)

The USCBFAL bit enables or disables the GTCNT counter count up on the falling edge of the GTIOCnB pin input, when the GTIOCnA input is 0.

USCBFAH bit (GTIOCnB Pin Falling Input during GTIOCnA Value High Source Counter Count Up Enable)

The USCBFAH bit enables or disables the GTCNT counter count up on the falling edge of the GTIOCnB pin input, when the GTIOCnA input is 1.

USELCm bit (ELC_GPTm Event Source Counter Count Up Enable) (m = A to H)

The USELCm bit enables or disables the GTCNT counter count up at the ELC_GPTm event input.

20.2.9 GTDNSR : General PWM Timer Down Count Source Select Register

Base address: GPT32n = 0x4016_9000 + 0x0100 × n (n = 0, 1)
GPT16m = 0x4016_9000 + 0x0100 × m (m = 2 to 5)

Offset address: 0x20

Bit position:	31	30	29	28	27	26	25	24	23	22	21	20	19	18	17	16
Bit field:	—	—	—	—	—	—	—	—	DSELCH	DSELCG	DSELCF	DSELCE	DSELCD	DSELCC	DSELCB	DSELCA
Value after reset:	0	0	0	0	0	0	0	0	0	0	0	0	0	0	0	0

Bit position:	15	14	13	12	11	10	9	8	7	6	5	4	3	2	1	0
Bit field:	DSCBFAH	DSCBFAL	DSCBRAH	DSCBRAL	DSCAFBH	DSCAFBL	DSCARBH	DSCARBL	DSGTRGDF	DSGTRGDR	DSGTRGCF	DSGTRGCR	DSGTRGBF	DSGTRGBR	DSGTRGAF	DSGTRGAR
Value after reset:	0	0	0	0	0	0	0	0	0	0	0	0	0	0	0	0

Bit	Symbol	Function	R/W
0	DSGTRGAR	GTETRGA Pin Rising Input Source Counter Count Down Enable 0: Counter count down disabled on the rising edge of GTETRGA input 1: Counter count down enabled on the rising edge of GTETRGA input	R/W
1	DSGTRGAF	GTETRGA Pin Falling Input Source Counter Count Down Enable 0: Counter count down disabled on the falling edge of GTETRGA input 1: Counter count down enabled on the falling edge of GTETRGA input	R/W
2	DSGTRGBR	GTETRGB Pin Rising Input Source Counter Count Down Enable 0: Counter count down disabled on the rising edge of GTETRGB input 1: Counter count down enabled on the rising edge of GTETRGB input	R/W
3	DSGTRGBF	GTETRGB Pin Falling Input Source Counter Count Down Enable 0: Counter count down disabled on the falling edge of GTETRGB input 1: Counter count down enabled on the falling edge of GTETRGB input	R/W
4	DSGTRGCR	GTETRGC Pin Rising Input Source Counter Count Down Enable 0: Counter count down disabled on the rising edge of GTETRGC input 1: Counter count down enabled on the rising edge of GTETRGC input	R/W

Bit	Symbol	Function	R/W
5	DSGTRGCF	GTETRGC Pin Falling Input Source Counter Count Down Enable 0: Counter count down disabled on the falling edge of GTETRGC input 1: Counter count down enabled on the falling edge of GTETRGC input	R/W
6	DSGTRGDR	GTETRGD Pin Rising Input Source Counter Count Down Enable 0: Counter count down disabled on the rising edge of GTETRGD input 1: Counter count down enabled on the rising edge of GTETRGD input	R/W
7	DSGTRGDF	GTETRGD Pin Falling Input Source Counter Count Down Enable 0: Counter count down disabled on the falling edge of GTETRGD input 1: Counter count down enabled on the falling edge of GTETRGD input	R/W
8	DSCARBL	GTIOCnA Pin Rising Input during GTIOCnB Value Low Source Counter Count Down Enable 0: Counter count down disabled on the rising edge of GTIOCnA input when GTIOCnB input is 0 1: Counter count down enabled on the rising edge of GTIOCnA input when GTIOCnB input is 0	R/W
9	DSCARBH	GTIOCnA Pin Rising Input during GTIOCnB Value High Source Counter Count Down Enable 0: Counter count down disabled on the rising edge of GTIOCnA input when GTIOCnB input is 1 1: Counter count down enabled on the rising edge of GTIOCnA input when GTIOCnB input is 1	R/W
10	DSCAFBL	GTIOCnA Pin Falling Input during GTIOCnB Value Low Source Counter Count Down Enable 0: Counter count down disabled on the falling edge of GTIOCnA input when GTIOCnB input is 0 1: Counter count down enabled on the falling edge of GTIOCnA input when GTIOCnB input is 0	R/W
11	DSCAFBH	GTIOCnA Pin Falling Input during GTIOCnB Value High Source Counter Count Down Enable 0: Counter count down disabled on the falling edge of GTIOCnA input when GTIOCnB input is 1 1: Counter count down enabled on the falling edge of GTIOCnA input when GTIOCnB input is 1	R/W
12	DSCBRAL	GTIOCnB Pin Rising Input during GTIOCnA Value Low Source Counter Count Down Enable 0: Counter count down disabled on the rising edge of GTIOCnB input when GTIOCnA input is 0 1: Counter count down enabled on the rising edge of GTIOCnB input when GTIOCnA input is 0	R/W
13	DSCBRAH	GTIOCnB Pin Rising Input during GTIOCnA Value High Source Counter Count Down Enable 0: Counter count down disabled on the rising edge of GTIOCnB input when GTIOCnA input is 1 1: Counter count down enabled on the rising edge of GTIOCnB input when GTIOCnA input is 1	R/W
14	DSCBFAL	GTIOCnB Pin Falling Input during GTIOCnA Value Low Source Counter Count Down Enable 0: Counter count down disabled on the falling edge of GTIOCnB input when GTIOCnA input is 0 1: Counter count down enabled on the falling edge of GTIOCnB input when GTIOCnA input is 0	R/W
15	DSCBFAH	GTIOCnB Pin Falling Input during GTIOCnA Value High Source Counter Count Down Enable 0: Counter count down disabled on the falling edge of GTIOCnB input when GTIOCnA input is 1 1: Counter count down enabled on the falling edge of GTIOCnB input when GTIOCnA input is 1	R/W
16	DSELCA	ELC_GPTA Event Source Counter Count Down Enable 0: Counter count down disabled at the ELC_GPTA input 1: Counter count down enabled at the ELC_GPTA input	R/W

Bit	Symbol	Function	R/W
17	DSELCB	ELC_GPTB Event Source Counter Count Down Enable 0: Counter count down disabled at the ELC_GPTB input 1: Counter count down enabled at the ELC_GPTB input	R/W
18	DSELCC	ELC_GPTC Event Source Counter Count Down Enable 0: Counter count down disabled at the ELC_GPTC input 1: Counter count down enabled at the ELC_GPTC input	R/W
19	DSELCD	ELC_GPTD Event Source Counter Count Down Enable 0: Counter count down disabled at the ELC_GPTD input 1: Counter count down enabled at the ELC_GPTD input	R/W
20	DSELCE	ELC_GPTE Event Source Counter Count Down Enable 0: Counter count down disabled at the ELC_GPTE input 1: Counter count down enabled at the ELC_GPTE input	R/W
21	DSELCF	ELC_GPTF Event Source Counter Count Down Enable 0: Counter count down disabled at the ELC_GPTF input 1: Counter count down enabled at the ELC_GPTF input	R/W
22	DSELCG	ELC_GPTG Event Source Counter Count Down Enable 0: Counter count down disabled at the ELC_GPTG input 1: Counter count down enabled at the ELC_GPTG input	R/W
23	DSELCH	ELC_GPTH Event Source Counter Count Down Enable 0: Counter count down disabled at the ELC_GPTH input 1: Counter count down enabled at the ELC_GPTH input	R/W
31:24	—	These bits are read as 0. The write value should be 0.	R/W

The GTDNSR sets the source to count down the GTCNT counter.

When at least one bit in the GTDNSR register is set to 1, the GTCNT counter is counted down by the source that is set to 1 in this register. In this case, GTCR.TPCS has no effect.

Number of decrement in counting is one even when multiple sources are generated simultaneously.

Inputs from GTETRGn (n = A to D) pins are input to the GPT through the POEG. Set the polarity of these signals with the POEG.

DSGTRGAR bit (GTETRGA Pin Rising Input Source Counter Count Down Enable)

The DSGTRGAR bit enables or disables the GTCNT counter count down on the rising edge of the GTETRGA pin input.

DSGTRGAF bit (GTETRGA Pin Falling Input Source Counter Count Down Enable)

The DSGTRGAF bit enables or disables the GTCNT counter count down on the falling edge of the GTETRGA pin input.

DSGTRGBR bit (GTETRGB Pin Rising Input Source Counter Count Down Enable)

The DSGTRGBR bit enables or disables the GTCNT counter count down on the rising edge of the GTETRGB pin input.

DSGTRGBF bit (GTETRGB Pin Falling Input Source Counter Count Down Enable)

The DSGTRGBF bit enables or disables the GTCNT counter count down on the falling edge of the GTETRGB pin input.

DSGTRGCR bit (GTETRGC Pin Rising Input Source Counter Count Down Enable)

The DSGTRGCR bit enables or disables the GTCNT counter count down on the rising edge of the GTETRGC pin input.

DSGTRGCF bit (GTETRGC Pin Falling Input Source Counter Count Down Enable)

The DSGTRGCF bit enables or disables the GTCNT counter count down on the falling edge of the GTETRGC pin input.

DSGTRGDR bit (GTETRGD Pin Rising Input Source Counter Count Down Enable)

The DSGTRGDR bit enables or disables the GTCNT counter count down on the rising edge of the GTETRGD pin input.

DSGTRGDF bit (GTETRGD Pin Falling Input Source Counter Count Down Enable)

The DSGTRGDF bit enables or disables the GTCNT counter count down on the falling edge of the GTETRGD pin input.

DSCARBL bit (GTIOCnA Pin Rising Input during GTIOCnB Value Low Source Counter Count Down Enable)

The DSCARBL bit enables or disables the GTCNT counter count down on the rising edge of the GTIOCnA pin input, when the GTIOCnB input is 0.

DSCARBH bit (GTIOCnA Pin Rising Input during GTIOCnB Value High Source Counter Count Down Enable)

The DSCARBH bit enables or disables the GTCNT counter count down on the rising edge of the GTIOCnA pin input, when GTIOCnB input is 1.

DSCAFBL bit (GTIOCnA Pin Falling Input during GTIOCnB Value Low Source Counter Count Down Enable)

The DSCAFBL bit enables or disables the GTCNT counter count down on the falling edge of the GTIOCnA pin input, when GTIOCnB input is 0.

DSCAFBH bit (GTIOCnA Pin Falling Input during GTIOCnB Value High Source Counter Count Down Enable)

The DSCAFBH bit enables or disables the GTCNT counter count down on the falling edge of the GTIOCnA pin input, when GTIOCnB input is 1.

DSCBRAL bit (GTIOCnB Pin Rising Input during GTIOCnA Value Low Source Counter Count Down Enable)

The DSCBRAL bit enables or disables the GTCNT counter count down on the rising edge of the GTIOCnB pin input, when GTIOCnA input is 0.

DSCBRAH bit (GTIOCnB Pin Rising Input during GTIOCnA Value High Source Counter Count Down Enable)

The DSCBRAH bit enables or disables the GTCNT counter count down on the rising edge of GTIOCnB pin input, when GTIOCnA input is 1.

DSCBFAL bit (GTIOCnB Pin Falling Input during GTIOCnA Value Low Source Counter Count Down Enable)

The DSCBFAL bit enables or disables the GTCNT counter count down on the falling edge of the GTIOCnB pin input, when GTIOCnA input is 0.

DSCBFAH bit (GTIOCnB Pin Falling Input during GTIOCnA Value High Source Counter Count Down Enable)

The DSCBFAH bit enables or disables the GTCNT counter count down on the falling edge of the GTIOCnB pin input, when GTIOCnA input is 1.

DSELCm bit (ELC_GPTm Event Source Counter Count Down Enable) (m = A to H)

The DSELCm bit enables or disables the GTCNT counter count down at the ELC_GPTm event input.

20.2.10 GTICASR : General PWM Timer Input Capture Source Select Register A

Base address: GPT32n = 0x4016_9000 + 0x0100 × n (n = 0, 1)
GPT16m = 0x4016_9000 + 0x0100 × m (m = 2 to 5)

Offset address: 0x24

Bit position:	31	30	29	28	27	26	25	24	23	22	21	20	19	18	17	16
Bit field:	—	—	—	—	—	—	—	—	ASELCH	ASELCG	ASELCF	ASELCE	ASELCD	ASELCC	ASELCB	ASELCA
Value after reset:	0	0	0	0	0	0	0	0	0	0	0	0	0	0	0	0

Bit position:	15	14	13	12	11	10	9	8	7	6	5	4	3	2	1	0
Bit field:	ASCBFAH	ASCBFAL	ASCBRAH	ASCBRAL	ASCAFBH	ASCAFBL	ASCARBH	ASCARBL	ASGTRGDF	ASGTRGDR	ASGTRGCF	ASGTRGCR	ASGTRGBF	ASGTRGBR	ASGTRGAF	ASGTRGAR
Value after reset:	0	0	0	0	0	0	0	0	0	0	0	0	0	0	0	0

Bit	Symbol	Function	R/W
0	ASGTRGAR	GTETRGA Pin Rising Input Source GTCCRA Input Capture Enable 0: GTCCRA input capture disabled on the rising edge of GTETRGA input 1: GTCCRA input capture enabled on the rising edge of GTETRGA input	R/W
1	ASGTRGAF	GTETRGA Pin Falling Input Source GTCCRA Input Capture Enable 0: GTCCRA input capture disabled on the falling edge of GTETRGA input 1: GTCCRA input capture enabled on the falling edge of GTETRGA input	R/W
2	ASGTRGBR	GTETRGB Pin Rising Input Source GTCCRA Input Capture Enable 0: GTCCRA input capture disabled on the rising edge of GTETRGB input 1: GTCCRA input capture enabled on the rising edge of GTETRGB input	R/W
3	ASGTRGBF	GTETRGB Pin Falling Input Source GTCCRA Input Capture Enable 0: GTCCRA input capture disabled on the falling edge of GTETRGB input 1: GTCCRA input capture enabled on the falling edge of GTETRGB input	R/W
4	ASGTRGCR	GTETRGC Pin Rising Input Source GTCCRA Input Capture Enable 0: GTCCRA input capture disabled on the rising edge of GTETRGC input 1: GTCCRA input capture enabled on the rising edge of GTETRGC input	R/W
5	ASGTRGCF	GTETRGC Pin Falling Input Source GTCCRA Input Capture Enable 0: GTCCRA input capture disabled on the falling edge of GTETRGC input 1: GTCCRA input capture enabled on the falling edge of GTETRGC input	R/W
6	ASGTRGDR	GTETRGD Pin Rising Input Source GTCCRA Input Capture Enable 0: GTCCRA input capture disabled on the rising edge of GTETRGD input 1: GTCCRA input capture enabled on the rising edge of GTETRGD input	R/W
7	ASGTRGDF	GTETRGD Pin Falling Input Source GTCCRA Input Capture Enable 0: GTCCRA input capture disabled on the falling edge of GTETRGD input 1: GTCCRA input capture enabled on the falling edge of GTETRGD input	R/W
8	ASCARBL	GTIOCnA Pin Rising Input during GTIOCnB Value Low Source GTCCRA Input Capture Enable 0: GTCCRA input capture disabled on the rising edge of GTIOCnA input when GTIOCnB input is 0 1: GTCCRA input capture enabled on the rising edge of GTIOCnA input when GTIOCnB input is 0	R/W
9	ASCARBH	GTIOCnA Pin Rising Input during GTIOCnB Value High Source GTCCRA Input Capture Enable 0: GTCCRA input capture disabled on the rising edge of GTIOCnA input when GTIOCnB input is 1 1: GTCCRA input capture enabled on the rising edge of GTIOCnA input when GTIOCnB input is 1	R/W
10	ASCAFBL	GTIOCnA Pin Falling Input during GTIOCnB Value Low Source GTCCRA Input Capture Enable 0: GTCCRA input capture disabled on the falling edge of GTIOCnA input when GTIOCnB input is 0 1: GTCCRA input capture enabled on the falling edge of GTIOCnA input when GTIOCnB input is 0	R/W

Bit	Symbol	Function	R/W
11	ASCAFBH	GTIOCnA Pin Falling Input during GTIOCnB Value High Source GTCCRA Input Capture Enable 0: GTCCRA input capture disabled on the falling edge of GTIOCnA input when GTIOCnB input is 1 1: GTCCRA input capture enabled on the falling edge of GTIOCnA input when GTIOCnB input is 1	R/W
12	ASCBRAL	GTIOCnB Pin Rising Input during GTIOCnA Value Low Source GTCCRA Input Capture Enable 0: GTCCRA input capture disabled on the rising edge of GTIOCnB input when GTIOCnA input is 0 1: GTCCRA input capture enabled on the rising edge of GTIOCnB input when GTIOCnA input is 0	R/W
13	ASCBRAH	GTIOCnB Pin Rising Input during GTIOCnA Value High Source GTCCRA Input Capture Enable 0: GTCCRA input capture disabled on the rising edge of GTIOCnB input when GTIOCnA input is 1 1: GTCCRA input capture enabled on the rising edge of GTIOCnB input when GTIOCnA input is 1	R/W
14	ASCBFAL	GTIOCnB Pin Falling Input during GTIOCnA Value Low Source GTCCRA Input Capture Enable 0: GTCCRA input capture disabled on the falling edge of GTIOCnB input when GTIOCnA input is 0 1: GTCCRA input capture enabled on the falling edge of GTIOCnB input when GTIOCnA input is 0	R/W
15	ASCBFAH	GTIOCnB Pin Falling Input during GTIOCnA Value High Source GTCCRA Input Capture Enable 0: GTCCRA input capture disabled on the falling edge of GTIOCnB input when GTIOCnA input is 1 1: GTCCRA input capture enabled on the falling edge of GTIOCnB input when GTIOCnA input is 1	R/W
16	ASELCA	ELC_GPTA Event Source GTCCRA Input Capture Enable 0: GTCCRA input capture disabled at the ELC_GPTA input 1: GTCCRA input capture enabled at the ELC_GPTA input	R/W
17	ASELCB	ELC_GPTB Event Source GTCCRA Input Capture Enable 0: GTCCRA input capture disabled at the ELC_GPTB input 1: GTCCRA input capture enabled at the ELC_GPTB input	R/W
18	ASELCC	ELC_GPTC Event Source GTCCRA Input Capture Enable 0: GTCCRA input capture disabled at the ELC_GPTC input 1: GTCCRA input capture enabled at the ELC_GPTC input	R/W
19	ASELCD	ELC_GPTD Event Source GTCCRA Input Capture Enable 0: GTCCRA input capture disabled at the ELC_GPTD input 1: GTCCRA input capture enabled at the ELC_GPTD input	R/W
20	ASELCE	ELC_GPTE Event Source GTCCRA Input Capture Enable 0: GTCCRA input capture disabled at the ELC_GPTE input 1: GTCCRA input capture enabled at the ELC_GPTE input	R/W
21	ASELCF	ELC_GPTF Event Source GTCCRA Input Capture Enable 0: GTCCRA input capture disabled at the ELC_GPTF input 1: GTCCRA input capture enabled at the ELC_GPTF input	R/W
22	ASELCG	ELC_GPTG Event Source GTCCRA Input Capture Enable 0: GTCCRA input capture disabled at the ELC_GPTG input 1: GTCCRA input capture enabled at the ELC_GPTG input	R/W
23	ASELCH	ELC_GPTH Event Source GTCCRA Input Capture Enable 0: GTCCRA input capture disabled at the ELC_GPTH input 1: GTCCRA input capture enabled at the ELC_GPTH input	R/W
31:24	—	These bits are read as 0. The write value should be 0.	R/W

The GTICASR sets the source of input capture for GTCCRA.

When at least one bit among bits in the GTICASR register is set to 1, input capture operation making the GTCCRA register as an input capture register is performed.

Inputs from GTETRGn (n = A to D) pins are input to the GPT through the POEG. Set the polarity of these signals with the POEG.

ASGTRGAR bit (GTETRGA Pin Rising Input Source GTCCRA Input Capture Enable)

The ASGTRGAR bit enables or disables the input capture for GTCCRA on the rising edge of the GTETRGA pin input.

ASGTRGAF bit (GTETRGA Pin Falling Input Source GTCCRA Input Capture Enable)

The ASGTRGAF bit enables or disables the input capture for GTCCRA on the falling edge of the GTETRGA pin input.

ASGTRGBR bit (GTETRGB Pin Rising Input Source GTCCRA Input Capture Enable)

The ASGTRGBR bit enables or disables the input capture for GTCCRA on the rising edge of the GTETRGB pin input.

ASGTRGBF bit (GTETRGB Pin Falling Input Source GTCCRA Input Capture Enable)

The ASGTRGBF bit enables or disables the input capture for GTCCRA on the falling edge of the GTETRGB pin input.

ASGTRGCR bit (GTETRGC Pin Rising Input Source GTCCRA Input Capture Enable)

The ASGTRGCR bit enables or disables the input capture for GTCCRA on the rising edge of the GTETRGC pin input.

ASGTRGCF bit (GTETRGC Pin Falling Input Source GTCCRA Input Capture Enable)

The ASGTRGCF bit enables or disables the input capture for GTCCRA on the falling edge of the GTETRGC pin input.

ASGTRGDR bit (GTETRGD Pin Rising Input Source GTCCRA Input Capture Enable)

The ASGTRGDR bit enables or disables the input capture for GTCCRA on the rising edge of the GTETRGD pin input.

ASGTRGDF bit (GTETRGD Pin Falling Input Source GTCCRA Input Capture Enable)

The ASGTRGDF bit enables or disables the input capture for GTCCRA on the falling edge of the GTETRGD pin input.

ASCARBL bit (GTIOCnA Pin Rising Input during GTIOCnB Value Low Source GTCCRA Input Capture Enable)

The ASCARBL bit enables or disables the input capture for GTCCRA on the rising edge of the GTIOCnA pin input, when GTIOCnB input is 0.

ASCARBH bit (GTIOCnA Pin Rising Input during GTIOCnB Value High Source GTCCRA Input Capture Enable)

The ASCARBH bit enables or disables the input capture for GTCCRA on the rising edge of the GTIOCnA pin input, when GTIOCnB input is 1.

ASCAFBL bit (GTIOCnA Pin Falling Input during GTIOCnB Value Low Source GTCCRA Input Capture Enable)

The ASCAFBL bit enables or disables the input capture for GTCCRA on the falling edge of the GTIOCnA pin input, when GTIOCnB input is 0.

ASCAFBH bit (GTIOCnA Pin Falling Input during GTIOCnB Value High Source GTCCRA Input Capture Enable)

The ASCAFBH bit enables or disables the input capture for GTCCRA on the falling edge of the GTIOCnA pin input, when the GTIOCnB input is 1.

ASCBRAL bit (GTIOCnB Pin Rising Input during GTIOCnA Value Low Source GTCCRA Input Capture Enable)

The ASCBRAL bit enables or disables the input capture for GTCCRA on the rising edge of the GTIOCnB pin input, when the GTIOCnA input is 0.

ASCBRAH bit (GTIOCnB Pin Rising Input during GTIOCnA Value High Source GTCCRA Input Capture Enable)

The ASCBRAH bit enables or disables the input capture for GTCCRA on the rising edge of the GTIOCnB pin input, when GTIOCnA input is 1.

ASCBFAL bit (GTIOCnB Pin Falling Input during GTIOCnA Value Low Source GTCCRA Input Capture Enable)

The ASCBFAL bit enables or disables the input capture for GTCCRA on the falling edge of the GTIOCnB pin input, when GTIOCnA input is 0.

ASCBFAH bit (GTIOCnB Pin Falling Input during GTIOCnA Value High Source GTCCRA Input Capture Enable)

The ASCBFAH bit enables or disables the input capture for GTCCRA on the falling edge of the GTIOCnB pin input, when GTIOCnA input is 1.

ASELCm bit (ELC_GPTm Event Source Counter GTCCRA Input Capture Enable) (m = A to H)

The ASELCm bit enables or disables the input capture for GTCCRA at the ELC_GPTm event input.

20.2.11 GTICBSR : General PWM Timer Input Capture Source Select Register B

Base address: GPT32n = 0x4016_9000 + 0x0100 × n (n = 0, 1)
GPT16m = 0x4016_9000 + 0x0100 × m (m = 2 to 5)

Offset address: 0x28

Bit position:	31	30	29	28	27	26	25	24	23	22	21	20	19	18	17	16
Bit field:	—	—	—	—	—	—	—	—	BSELCH	BSELCG	BSELCF	BSELCE	BSELCD	BSELCC	BSELCB	BSELCA
Value after reset:	0	0	0	0	0	0	0	0	0	0	0	0	0	0	0	0

Bit position:	15	14	13	12	11	10	9	8	7	6	5	4	3	2	1	0
Bit field:	BSCBFAH	BSCBFAL	BSCBRAH	BSCBRAL	BSCAFBH	BSCAFBL	BSCARBH	BSCARBL	BSGTRGDF	BSGTRGDR	BSGTRGCF	BSGTRGCR	BSGTRGBF	BSGTRGBR	BSGTRGAF	BSGTRGAR
Value after reset:	0	0	0	0	0	0	0	0	0	0	0	0	0	0	0	0

Bit	Symbol	Function	R/W
0	BSGTRGAR	GTETRGA Pin Rising Input Source GTCCRB Input Capture Enable 0: GTCCRB input capture disabled on the rising edge of GTETRGA input 1: GTCCRB input capture enabled on the rising edge of GTETRGA input	R/W
1	BSGTRGAF	GTETRGA Pin Falling Input Source GTCCRB Input Capture Enable 0: GTCCRB input capture disabled on the falling edge of GTETRGA input 1: GTCCRB input capture enabled on the falling edge of GTETRGA input	R/W
2	BSGTRGBR	GTETRGB Pin Rising Input Source GTCCRB Input Capture Enable 0: GTCCRB input capture disabled on the rising edge of GTETRGB input 1: GTCCRB input capture enabled on the rising edge of GTETRGB input	R/W
3	BSGTRGBF	GTETRGB Pin Falling Input Source GTCCRB Input Capture Enable 0: GTCCRB input capture disabled on the falling edge of GTETRGB input 1: GTCCRB input capture enabled on the falling edge of GTETRGB input	R/W
4	BSGTRGCR	GTETRGC Pin Rising Input Source GTCCRB Input Capture Enable 0: GTCCRB input capture disabled on the rising edge of GTETRGC input 1: GTCCRB input capture enabled on the rising edge of GTETRGC input	R/W
5	BSGTRGCF	GTETRGC Pin Falling Input Source GTCCRB Input Capture Enable 0: GTCCRB input capture disabled on the falling edge of GTETRGC input 1: GTCCRB input capture enabled on the falling edge of GTETRGC input	R/W
6	BSGTRGDR	GTETRGD Pin Rising Input Source GTCCRB Input Capture Enable 0: GTCCRB input capture disabled on the rising edge of GTETRGD input 1: GTCCRB input capture enabled on the rising edge of GTETRGD input	R/W
7	BSGTRGDF	GTETRGD Pin Falling Input Source GTCCRB Input Capture Enable 0: GTCCRB input capture disabled on the falling edge of GTETRGD input 1: GTCCRB input capture enabled on the falling edge of GTETRGD input	R/W

Bit	Symbol	Function	R/W
8	BSCARBL	GTIOCnA Pin Rising Input during GTIOCnB Value Low Source GTCCRB Input Capture Enable 0: GTCCRB input capture disabled on the rising edge of GTIOCnA input when GTIOCnB input is 0 1: GTCCRB input capture enabled on the rising edge of GTIOCnA input when GTIOCnB input is 0	R/W
9	BSCARBH	GTIOCnA Pin Rising Input during GTIOCnB Value High Source GTCCRB Input Capture Enable 0: GTCCRB input capture disabled on the rising edge of GTIOCnA input when GTIOCnB input is 1 1: GTCCRB input capture enabled on the rising edge of GTIOCnA input when GTIOCnB input is 1	R/W
10	BSCAFBL	GTIOCnA Pin Falling Input during GTIOCnB Value Low Source GTCCRB Input Capture Enable 0: GTCCRB input capture disabled on the falling edge of GTIOCnA input when GTIOCnB input is 0 1: GTCCRB input capture enabled on the falling edge of GTIOCnA input when GTIOCnB input is 0	R/W
11	BSCAFBH	GTIOCnA Pin Falling Input during GTIOCnB Value High Source GTCCRB Input Capture Enable 0: GTCCRB input capture disabled on the falling edge of GTIOCnA input when GTIOCnB input is 1 1: GTCCRB input capture enabled on the falling edge of GTIOCnA input when GTIOCnB input is 1	R/W
12	BSCBRAL	GTIOCnB Pin Rising Input during GTIOCnA Value Low Source GTCCRB Input Capture Enable 0: GTCCRB input capture disabled on the rising edge of GTIOCnB input when GTIOCnA input is 0 1: GTCCRB input capture enabled on the rising edge of GTIOCnB input when GTIOCnA input is 0	R/W
13	BSCBRAH	GTIOCnB Pin Rising Input during GTIOCnA Value High Source GTCCRB Input Capture Enable 0: GTCCRB input capture disabled on the rising edge of GTIOCnB input when GTIOCnA input is 1 1: GTCCRB input capture enabled on the rising edge of GTIOCnB input when GTIOCnA input is 1	R/W
14	BSCBFAL	GTIOCnB Pin Falling Input during GTIOCnA Value Low Source GTCCRB Input Capture Enable 0: GTCCRB input capture disabled on the falling edge of GTIOCnB input when GTIOCnA input is 0 1: GTCCRB input capture enabled on the falling edge of GTIOCnB input when GTIOCnA input is 0	R/W
15	BSCBFAH	GTIOCnB Pin Falling Input during GTIOCnA Value High Source GTCCRB Input Capture Enable 0: GTCCRB input capture disabled on the falling edge of GTIOCnB input when GTIOCnA input is 1 1: GTCCRB input capture enabled on the falling edge of GTIOCnB input when GTIOCnA input is 1	R/W
16	BSELCA	ELC_GPTA Event Source GTCCRB Input Capture Enable 0: GTCCRB input capture disabled at the ELC_GPTA input 1: GTCCRB input capture enabled at the ELC_GPTA input	R/W
17	BSELCB	ELC_GPTB Event Source GTCCRB Input Capture Enable 0: GTCCRB input capture disabled at the ELC_GPTB input 1: GTCCRB input capture enabled at the ELC_GPTB input	R/W
18	BSELCC	ELC_GPTC Event Source GTCCRB Input Capture Enable 0: GTCCRB input capture disabled at the ELC_GPTC input 1: GTCCRB input capture enabled at the ELC_GPTC input	R/W
19	BSELCD	ELC_GPTD Event Source GTCCRB Input Capture Enable 0: GTCCRB input capture disabled at the ELC_GPTD input 1: GTCCRB input capture enabled at the ELC_GPTD input	R/W

Bit	Symbol	Function	R/W
20	BSELCE	ELC_GPTE Event Source GTCCRB Input Capture Enable 0: GTCCRB input capture disabled at the ELC_GPTE input 1: GTCCRB input capture enabled at the ELC_GPTE input	R/W
21	BSELCF	ELC_GPTF Event Source GTCCRB Input Capture Enable 0: GTCCRB input capture disabled at the ELC_GPTF input 1: GTCCRB input capture enabled at the ELC_GPTF input	R/W
22	BSELCG	ELC_GPTG Event Source GTCCRB Input Capture Enable 0: GTCCRB input capture disabled at the ELC_GPTG input 1: GTCCRB input capture enabled at the ELC_GPTG input	R/W
23	BSELCH	ELC_GPTH Event Source GTCCRB Input Capture Enable 0: GTCCRB input capture disabled at the ELC_GPTH input 1: GTCCRB input capture enabled at the ELC_GPTH input	R/W
31:24	—	These bits are read as 0. The write value should be 0.	R/W

The GTICBSR sets the source of input capture for GTCCRB.

When at least one bit among bits in the GTICBSR register is set to 1, input capture operation making the GTCCRB register as an input capture register is performed.

Inputs from GTETRGn (n = A to D) pins are input to the GPT through the POEG. Set the polarity of these signals with the POEG.

BSGTRGAR bit (GTETRGA Pin Rising Input Source GTCCRB Input Capture Enable)

The BSGTRGAR bit enables or disables the input capture for GTCCRB on the rising edge of the GTETRGA pin input.

BSGTRGAF bit (GTETRGA Pin Falling Input Source GTCCRB Input Capture Enable)

The BSGTRGAF bit enables or disables the input capture for GTCCRB on the falling edge of the GTETRGA pin input.

BSGTRGBR bit (GTETRGB Pin Rising Input Source GTCCRB Input Capture Enable)

The BSGTRGBR bit enables or disables the input capture for GTCCRB on the rising edge of GTETRGB pin input.

BSGTRGBF bit (GTETRGB Pin Falling Input Source GTCCRB Input Capture Enable)

The BSGTRGBF bit enables or disables the input capture for GTCCRB on the falling edge of the GTETRGB pin input.

BSGTRGCR bit (GTETRGC Pin Rising Input Source GTCCRB Input Capture Enable)

The BSGTRGCR bit enables or disables the input capture for GTCCRB on the rising edge of GTETRGC pin input.

BSGTRGCF bit (GTETRGC Pin Falling Input Source GTCCRB Input Capture Enable)

The BSGTRGCF bit enables or disables the input capture for GTCCRB on the falling edge of the GTETRGC pin input.

BSGTRGDR bit (GTETRGD Pin Rising Input Source GTCCRB Input Capture Enable)

The BSGTRGDR bit enables or disables the input capture for GTCCRB on the rising edge of GTETRGD pin input.

BSGTRGDF bit (GTETRGD Pin Falling Input Source GTCCRB Input Capture Enable)

The BSGTRGDF bit enables or disables the input capture for GTCCRB on the falling edge of the GTETRGD pin input.

BSCARBL bit (GTIOCnA Pin Rising Input during GTIOCnB Value Low Source GTCCRB Input Capture Enable)

The BSCARBL bit enables or disables the input capture for GTCCRB on the rising edge of the GTIOCnA pin input, when the GTIOCnB input is 0.

BSCARBH bit (GTIOCnA Pin Rising Input during GTIOCnB Value High Source GTCCRB Input Capture Enable)

The BSCARBH bit enables or disables the input capture for GTCCRB on the rising edge of the GTIOCnA pin input, when GTIOCnB input is 1.

BSCAFBL bit (GTIOCnA Pin Falling Input during GTIOCnB Value Low Source GTCCRB Input Capture Enable)

The BSCAFBL bit enables or disables the input capture for GTCCRB on the falling edge of the GTIOCnA pin input, when GTIOCnB input is 0.

BSCAFBH bit (GTIOCnA Pin Falling Input during GTIOCnB Value High Source GTCCRB Input Capture Enable)

The BSCAFBH bit enables or disables the input capture for GTCCRB on the falling edge of the GTIOCnA pin input, when GTIOCnB input is 1.

BSCBRAL bit (GTIOCnB Pin Rising Input during GTIOCnA Value Low Source GTCCRB Input Capture Enable)

The BSCBRAL bit enables or disables the input capture for GTCCRB on the rising edge of the GTIOCnB pin input, when GTIOCnA input is 0.

BSCBRAH bit (GTIOCnB Pin Rising Input during GTIOCnA Value High Source GTCCRB Input Capture Enable)

The BSCBRAH bit enables or disables the input capture for GTCCRB on the rising edge of the GTIOCnB pin input, when GTIOCnA input is 1.

BSCBFAL bit (GTIOCnB Pin Falling Input during GTIOCnA Value Low Source GTCCRB Input Capture Enable)

The BSCBFAL bit enables or disables the input capture for GTCCRB on the falling edge of the GTIOCnB pin input, when GTIOCnA input is 0.

BSCBFAH bit (GTIOCnB Pin Falling Input during GTIOCnA Value High Source GTCCRB Input Capture Enable)

The BSCBFAH bit enables or disables the input capture for GTCCRB on the falling edge of the GTIOCnB pin input, when GTIOCnA input is 1.

BSELCm bit (ELC_GPTm Event Source Counter GTCCRB Input Capture Enable) (m = A to H)

The BSELCm bit enables or disables the input capture for GTCCRB at the ELC_GPTm event input.

20.2.12 GTCR : General PWM Timer Control Register

Base address: GPT32n = 0x4016_9000 + 0x0100 × n (n = 0, 1)
GPT16m = 0x4016_9000 + 0x0100 × m (m = 2 to 5)

Offset address: 0x2C

Bit position:	31	30	29	28	27	26	25	24	23	22	21	20	19	18	17	16
Bit field:	—	—	—	—	—	TPCS[3:0]				—	—	—	—	MD[2:0]		
Value after reset:	0	0	0	0	0	0	0	0	0	0	0	0	0	0	0	0

Bit position:	15	14	13	12	11	10	9	8	7	6	5	4	3	2	1	0
Bit field:	—	—	—	—	—	—	—	—	—	—	—	—	—	—	—	CST
Value after reset:	0	0	0	0	0	0	0	0	0	0	0	0	0	0	0	0

Bit	Symbol	Function	R/W
0	CST	Count Start 0: Count operation is stopped 1: Count operation is performed	R/W
15:1	—	These bits are read as 0. The write value should be 0.	R/W

Bit	Symbol	Function	R/W
18:16	MD[2:0]	Mode Select 0 0 0: Saw-wave PWM mode (single buffer or double buffer possible) 0 0 1: Saw-wave one-shot pulse mode (fixed buffer operation) 0 1 0: Setting prohibited 0 1 1: Setting prohibited 1 0 0: Triangle-wave PWM mode 1 (32-bit transfer at trough) (single buffer or double buffer is possible) 1 0 1: Triangle-wave PWM mode 2 (32-bit transfer at crest and trough) (single buffer or double buffer is possible) 1 1 0: Triangle-wave PWM mode 3 (64-bit transfer at trough) (fixed buffer operation) 1 1 1: Setting prohibited	R/W
22:19	—	These bits are read as 0. The write value should be 0.	R/W
26:23	TPCS[3:0]	Timer Prescaler Select 0 0 0 0: PCLKD/1 0 0 0 1: PCLKD/2 0 0 1 0: PCLKD/4 0 0 1 1: PCLKD/8 0 1 0 0: PCLKD/16 0 1 0 1: PCLKD/32 0 1 1 0: PCLKD/64 0 1 1 1: Setting prohibited 1 0 0 0: PCLKD/256 1 0 0 1: Setting prohibited 1 0 1 0: PCLKD/1024 1 0 1 1: Setting prohibited 1 1 0 0: GTETRGA (with the POEG) 1 1 0 1: GTETRGB (with the POEG) 1 1 1 0: GTETRGC (with the POEG) 1 1 1 1: GTETRGD (with the POEG)	R/W
31:27	—	These bits are read as 0. The write value should be 0.	R/W

The GTCR controls GTCNT.

CST bit (Count Start)

The CST bit controls the GTCNT counter start and stop.

[Setting conditions]

- The GTSTR value where the channel number associated with the bit number is set to 1 with the GTSSR.CSTRT bit at 1
- The ELC event input, the external trigger, or the GTIOCnA/GTIOCnB input that are enabled by GTSSR for the starting counter source, occurs (n = 0 to 5)
- 1 is written by software directly.

[Clearing conditions]

- The GTSTP value where the channel number associated with the bit number is set to 1 with the GTPSR.CSTOP bit at 1
- The ELC event input, the external trigger, or the GTIOCnA/GTIOCnB input enabled by GTPSR as the counter stop source, occurs (n = 0 to 5)
- 0 is written by software directly.
- When the period count function is finished while the GTPC.ASTP bit is 1.

MD[2:0] bits (Mode Select)

The MD[2:0] bits select the GPT operating mode. Only the MD[2] bit is valid at input capture. Counting in saw-wave mode is performed by setting 0 to the MD[2] bit, and counting in triangle-wave mode is performed by setting 1 to the MD[2] bit. The MD[2:0] bits must be set while the GTCNT operation is stopped. During the event count operation (when at least one bit among the bits for the GTUPSR and GTDNSR registers is set to 1), set the MD[2:0] bits to the initial value (000b).

TPCS[3:0] bits (Timer Prescaler Select)

The TPCS[3:0] bits select the clock for GTCNT. A clock prescaler can be selected independently for each channel. The TPCS[3:0] bits must be set while the GTCNT operation is stopped.

When the GTETRGA, GTETRGB, GTETRGC, or GTETRGD is selected, output for the POEG at rising becomes a clock source. Set the polarity of these signals with the POEG.

20.2.13 GTUDDTYC : General PWM Timer Count Direction and Duty Setting Register

Base address: GPT32n = 0x4016_9000 + 0x0100 × n (n = 0, 1)
GPT16m = 0x4016_9000 + 0x0100 × m (m = 2 to 5)

Offset address: 0x30

Bit position:	31	30	29	28	27	26	25	24	23	22	21	20	19	18	17	16
Bit field:	—	—	—	—	OBDTYR	OBDTYF	OBDTY[1:0]		—	—	—	—	OADTYR	OADTYF	OADTY[1:0]	
Value after reset:	0	0	0	0	0	0	0	0	0	0	0	0	0	0	0	0

Bit position:	15	14	13	12	11	10	9	8	7	6	5	4	3	2	1	0
Bit field:	—	—	—	—	—	—	—	—	—	—	—	—	—	—	UDF	UD
Value after reset:	0	0	0	0	0	0	0	0	0	0	0	0	0	0	0	1

Bit	Symbol	Function	R/W
0	UD	Count Direction Setting 0: GTCNT counts down 1: GTCNT counts up	R/W
1	UDF	Forcible Count Direction Setting 0: Not forcibly set 1: Forcibly set	R/W
15:2	—	These bits are read as 0. The write value should be 0.	R/W
17:16	OADTY[1:0]	GTIOCnA Output Duty Setting 0 0: GTIOCnA pin duty depends on the compare match 0 1: GTIOCnA pin duty depends on the compare match 1 0: GTIOCnA pin duty 0% 1 1: GTIOCnA pin duty 100%	R/W
18	OADTYF	Forcible GTIOCnA Output Duty Setting 0: Not forcibly set 1: Forcibly set	R/W
19	OADTYR	GTIOCnA Output Value Selecting after Releasing 0%/100% Duty Setting 0: The function selected by the GTIOA[3:2] bits is applied to the output value when the duty cycle is set after release from the 0 or 100% duty-cycle setting. 1: The function selected by the GTIOA[3:2] bits is applied to the compare match output value which is masked after release from the 0 or 100% duty-cycle setting.	R/W
23:20	—	These bits are read as 0. The write value should be 0.	R/W
25:24	OBDTY[1:0]	GTIOCnB Output Duty Setting 0 0: GTIOCnB pin duty depends on the compare match 0 1: GTIOCnB pin duty depends on the compare match 1 0: GTIOCnB pin duty 0% 1 1: GTIOCnB pin duty 100%	R/W
26	OBDTYF	Forcible GTIOCnB Output Duty Setting 0: Not forcibly set 1: Forcibly set	R/W
27	OBDTYR	GTIOCnB Output Value Selecting after Releasing 0%/100% Duty Setting 0: The function selected by the GTIOB[3:2] bits is applied to the output value when the duty cycle is set after release from the 0 or 100% duty-cycle setting. 1: The function selected by the GTIOB[3:2] bits is applied to the compare match output value which is masked after release from the 0 or 100% duty-cycle setting.	R/W

Bit	Symbol	Function	R/W
31:28	—	These bits are read as 0. The write value should be 0.	R/W

Note: n = 0 to 5

The GTUDDTYC sets the direction in which the GTCNT counts (up-counting or down-counting), and sets the duty of the GTIOCnA/GTIOCnB pin output.

The setting is invalid during the event count operation.

Count Direction:

- In saw-wave mode.
  When the UD value is set to 0 during up-counting, the count direction changes at an overflow (the timing synchronous with count clock after the GTCNT value becomes the GTPR value). When the UD value is set to 1 during down-counting, the count direction changes at an underflow (the timing synchronous with count clock after the GTCNT value becomes 0).
  When the UD value changes from 1 to 0 with the UDF bit being 0 and while counting stops, the counter starts up-counting and the count direction changes at an overflow (the timing synchronous with count clock after the GTCNT value becomes the GTPR value). When the UD value changes from 0 to 1 with the UDF bit being 0 and while counting stops, the counter starts down-counting and the count direction changes at an underflow (the timing synchronous with count clock after the GTCNT value becomes 0).
  When the UDF bit is set to 1 while counting stops, the UD bit value is reflected in the count direction when counting starts.
- In triangle-wave mode.
  When the UD value changes during counting, the count direction does not change. When the UD value changes while the UDF bit is 0 and counting stops, the change is not reflected in the count direction when counting starts.
  When the UDF bit is set to 1 while counting is stopped, the UD value is reflected in the count direction when counting starts.

UD bit (Count Direction Setting)

The UD bit sets the count direction (up-counting or down-counting) for GTCNT.

UDF bit (Forcible Count Direction Setting)

The UDF bit forcibly sets the count direction when GTCNT starts operation as the UD value. Only 0 should be written to this bit during counter operation. When 1 is written to this bit while counting stops, return this bit to 0 before counting starts.

Output duty

- In saw-wave mode.
  When the OADTY/OBDTY value changes during up-counting, the duty is reflected at an overflow (GTCNT = GTPR).
  When the OADTY/OBDTY value is changed during down-counting, the duty is reflected at an underflow (GTCNT = 0).
  When the OADTY/OBDTY value is changed with the OADTYF/OBDTYF bit being 0 and while counting stops the output duty is not reflected at the starting counter operation. When the count direction is up, the output duty is reflected at an overflow (GTCNT = GTPR). When the count direction is down, the output duty is reflected at an underflow (GTCNT = 0).
  When the OADTY/OBDTY value is changed with the OADTYF/OBDTYF bit being 1 and while counting stops, the output duty is reflected at starting counter operation.
- In triangle-wave mode.
  When the OADTY/OBDTY value changes during counting, the duty is reflected at an underflow.
  When the OADTY/OBDTY value is changed with the OADTYF/OBDTYF bit being 0 and while counting stops, the output duty is not reflected at the starting counter operation. The output duty is reflected at an underflow.
  When the OADTY/OBDTY value is changed with the OADTYF/OBDTYF bit being 1 and while counting stops, the output duty is reflected at starting counter operation.

In both saw-wave mode and triangle-wave mode, when the OADTYF/OBDTYF bit is set back to 0 and the OADTY[1:0]/OBDTY[1:0] bits are set after setting the OADTYF/OBDTYF bit to 1 and setting the OADTY[1:0]/OBDTY[1:0] bits for the duty of first cycle while count operation is stopped, these duty-cycle set during stopping count operation are reflected in the first cycle and the second cycle after starting count operation.

OmDTY[1:0] bits (GTIOCnm Output Duty Setting) (m = A, B)

The OmDTY[1:0] bits set the output duty (0%, 100% or compare match control) of the GTIOCnm pin.

OmDTYF bit (Forcible GTIOCnm Output Duty Setting) (m = A, B)

The OmDTYF bit forcibly sets the output duty cycle to the OmDTY setting. Set this bit to 0 during counter operation.

OmDTYR bit (GTIOCnm Output Value Selecting after Releasing 0%/100% Duty Setting) (m = A, B)

The OmDTYR bit selects the value that is the object of output retained or toggled at cycle end, when the control changes from 0% or 100% duty setting to compare match for the GTIOCnm pin and GTIOR.GTIOm[3:2] bits are set to 00b (output retained at cycle end) or the GTIOR.GTIOm[3:2] bits are set to 11b (output toggled at cycle end).

The GPT internally continues to perform compare match operation during duty-cycle 0% or 100% operation. When the OmDTYR bit is 1, the value after the period has elapsed due this compare match operation is target for the GTIOm[3:2] bits.

20.2.14 GTIOR : General PWM Timer I/O Control Register

Base address: GPT32n = 0x4016_9000 + 0x0100 × n (n = 0, 1)
GPT16m = 0x4016_9000 + 0x0100 × m (m = 2 to 5)

Offset address: 0x34

Bit position:	31	30	29	28	27	26	25	24	23	22	21	20	19	18	17	16
Bit field:	NFCSB[1:0]		NFBEN	—	—	OBDF[1:0]		OBE	OBHLD	OBDFLT	—	GTIOB[4:0]				
Value after reset:	0	0	0	0	0	0	0	0	0	0	0	0	0	0	0	0

Bit position:	15	14	13	12	11	10	9	8	7	6	5	4	3	2	1	0
Bit field:	NFCSA[1:0]		NFAEN	—	—	OADF[1:0]		OAE	OAHLD	OADFLT	—	GTIOA[4:0]				
Value after reset:	0	0	0	0	0	0	0	0	0	0	0	0	0	0	0	0

Bit	Symbol	Function	R/W
4:0	GTIOA[4:0]	GTIOCnA Pin Function Select See Table 20.4.	R/W
5	—	This bit is read as 0. The write value should be 0.	R/W
6	OADFLT	GTIOCnA Pin Output Value Setting at the Count Stop 0: The GTIOCnA pin outputs low when counting stops 1: The GTIOCnA pin outputs high when counting stops	R/W
7	OAHLD	GTIOCnA Pin Output Setting at the Start/Stop Count 0: The GTIOCnA pin output level at the start or stop of counting depends on the register setting 1: The GTIOCnA pin output level is retained at the start or stop of counting	R/W
8	OAE	GTIOCnA Pin Output Enable 0: Output is disabled 1: Output is enabled	R/W
10:9	OADF[1:0]	GTIOCnA Pin Disable Value Setting 0 0: None of the below options are specified 0 1: GTIOCnA pin is set to Hi-Z in response to controlling the output negation 1 0: GTIOCnA pin is set to 0 in response to controlling the output negation 1 1: GTIOCnA pin is set to 1 in response to controlling the output negation	R/W
12:11	—	These bits are read as 0. The write value should be 0.	R/W
13	NFAEN	Noise Filter A Enable 0: The noise filter for the GTIOCnA pin is disabled 1: The noise filter for the GTIOCnA pin is enabled	R/W

Bit	Symbol	Function	R/W
15:14	NFCSA[1:0]	Noise Filter A Sampling Clock Select 0 0: PCLKD/1 0 1: PCLKD/4 1 0: PCLKD/16 1 1: PCLKD/64	R/W
20:16	GTIOB[4:0]	GTIOCnB Pin Function Select See Table 20.4.	R/W
21	—	This bit is read as 0. The write value should be 0.	R/W
22	OBDFLT	GTIOCnB Pin Output Value Setting at the Count Stop 0: The GTIOCnB pin outputs low when counting stops 1: The GTIOCnB pin outputs high when counting stops	R/W
23	OBHLD	GTIOCnB Pin Output Setting at the Start/Stop Count 0: The GTIOCnB pin output level at the start/stop of counting depends on the register setting 1: The GTIOCnB pin output level is retained at the start/stop of counting	R/W
24	OBE	GTIOCnB Pin Output Enable 0: Output is disabled 1: Output is enabled	R/W
26:25	OBDF[1:0]	GTIOCnB Pin Disable Value Setting 0 0: None of the below options are specified 0 1: GTIOCnB pin is set to Hi-Z in response to controlling the output negation 1 0: GTIOCnB pin is set to 0 in response to controlling the output negation 1 1: GTIOCnB pin is set to 1 in response to controlling the output negation	R/W
28:27	—	These bits are read as 0. The write value should be 0.	R/W
29	NFBEN	Noise Filter B Enable 0: The noise filter for the GTIOCnB pin is disabled 1: The noise filter for the GTIOCnB pin is enabled	R/W
31:30	NFCSB[1:0]	Noise Filter B Sampling Clock Select 0 0: PCLKD/1 0 1: PCLKD/4 1 0: PCLKD/16 1 1: PCLKD/64	R/W

Note: n = 0 to 5

The GTIOR sets the functions of the GTIOCnA and GTIOCnB pins. (n = 0 to 5)

GTIOA[4:0] bits (GTIOCnA Pin Function Select)

The GTIOA[4:0] bits select the GTIOCnA pin function. For details, see Table 20.4.

OADFLT bit (GTIOCnA Pin Output Value Setting at the Count Stop)

The OADFLT bit sets whether the GTIOCnA pin outputs high or low when counting stops.

OAHLD bit (GTIOCnA Pin Output Setting at the Start/Stop Count)

The OAHLD bit specifies whether the GTIOCnA pin output level is retained or the level at the start or stop of counting depends on the register setting.

When the OAHLD bit is set to 0:

- The value specified in bit [4] of the GTIOA[4:0] bits is output when counting starts
- The value specified in the OADFLT bit is output when counting stops
- If the OADFLT bit is modified while counting stops, the new value is immediately reflected in the output.

When the OAHLD bit is set to 1:

- The output is retained when counting starts or stops.

OAE bit (GTIOCnA Pin Output Enable)

The OAE bit disables or enables the GTIOCnA pin output.

When GTCCRA register is used as the input capture register (at least one bit in the GTICASR register is set to 1), the GTIOCnA pin does not output regardless of the OAE bit value.

OADF[1:0] bits (GTIOCnA Pin Disable Value Setting)

The OADF[1:0] bits select the output value of the GTIOCnA pin in response to a request to disable output from the POEG.

NFAEN bit (Noise Filter A Enable)

The NFAEN bit disables or enables the noise filter for input from the GTIOCnA pin. Because changing the value of the bit might lead to the internal generation of an unexpected edge, select the output compare function for the relevant pin in the GTIOR register before doing so.

NFCSA[1:0] bits (Noise Filter A Sampling Clock Select)

The NFCSA[1:0] bits set the sampling interval for the noise filter of the GTIOCnA pin. When setting these bits, wait for 2 cycles of the selected sampling interval before setting the input capture function.

GTIOB[4:0] bits (GTIOCnB Pin Function Select)

The GTIOB[4:0] bits select the GTIOCnB pin function. For details, see Table 20.4.

OBDFLT bit (GTIOCnB Pin Output Value Setting at the Count Stop)

The OBDFLT bit sets whether the GTIOCnB pin outputs high or low when counting stops.

OBHLD bit (GTIOCnB Pin Output Setting at the Start/Stop Count)

The OBHLD bit specifies whether the GTIOCnB pin output level is retained or the level at the start or stop of counting depends on the register setting.

When the OBHLD bit is set to 0:

- The value specified in bit [4] of the GTIOB[4:0] bits is output when counting starts
- The value specified in the OBDFLT bit is output when counting stops
- If the OBDFLT bit is modified while counting stops, the new value is immediately reflected in the output.

When the OBHLD bit is set to 1:

- The output is retained when counting starts or stops.

OBE bit (GTIOCnB Pin Output Enable)

The OBE bit disables or enables the GTIOCnB pin output.

When GTCCRB register is used as the input capture register (at least one bit in the GTICBSR register is set to 1), the GTIOCnB pin does not output regardless of the OBE bit value.

OBDF[1:0] bits (GTIOCnB Pin Disable Value Setting)

The OBDF[1:0] bits select the output value of the GTIOCnB pin in response to a request to disable output from the POEG.

NFBEN bit (Noise Filter B Enable)

The NFBEN bit disables or enables the noise filter for input from the GTIOCnB pin. Because changing the value of the bit might lead to the internal generation of an unexpected edge, select the output compare function for the relevant pin in the GTIOR register before doing so.

NFCSB[1:0] bits (Noise Filter B Sampling Clock Select)

The NFCSB[1:0] bits set the sampling interval for the noise filter of the GTIOCnB pin. When setting these bits, wait for 2 cycles of the selected sampling interval before setting the input capture function.

Table 20.4 Settings of GTIOA[4:0] and GTIOB[4:0] bits

GTIOA/GTIOB[4:0] bits					Function		
b4	b3	b2	b1	b0	b4	b3, b2*1 *2 *3	b1, b0*2
0	0	0	0	0	Initial output is low	Output retained at cycle end	Output retained at GTCCRA/GTCCRB compare match
0	0	0	0	1			Low output at GTCCRA/GTCCRB compare match
0	0	0	1	0			High output at GTCCRA/GTCCRB compare match
0	0	0	1	1			Output toggled at GTCCRA/GTCCRB compare match
0	0	1	0	0		Low output at cycle end	Output retained at GTCCRA/GTCCRB compare match
0	0	1	0	1			Low output at GTCCRA/GTCCRB compare match
0	0	1	1	0			High output at GTCCRA/GTCCRB compare match
0	0	1	1	1			Output toggled at GTCCRA/GTCCRB compare match
0	1	0	0	0		High output at cycle end	Output retained at GTCCRA/GTCCRB compare match
0	1	0	0	1			Low output at GTCCRA/GTCCRB compare match
0	1	0	1	0			High output at GTCCRA/GTCCRB compare match
0	1	0	1	1			Output toggled at GTCCRA/GTCCRB compare match
0	1	1	0	0		Output toggled at cycle end	Output retained at GTCCRA/GTCCRB compare match
0	1	1	0	1			Low output at GTCCRA/GTCCRB compare match
0	1	1	1	0			High output at GTCCRA/GTCCRB compare match
0	1	1	1	1			Output toggled at GTCCRA/GTCCRB compare match
1	0	0	0	0	Initial output is high	Output retained at cycle end	Output retained at GTCCRA/GTCCRB compare match
1	0	0	0	1			Low output at GTCCRA/GTCCRB compare match
1	0	0	1	0			High output at GTCCRA/GTCCRB compare match
1	0	0	1	1			Output toggled at GTCCRA/GTCCRB compare match
1	0	1	0	0		Low output at cycle end	Output retained at GTCCRA/GTCCRB compare match
1	0	1	0	1			Low output at GTCCRA/GTCCRB compare match
1	0	1	1	0			High output at GTCCRA/GTCCRB compare match
1	0	1	1	1			Output toggled at GTCCRA/GTCCRB compare match
1	1	0	0	0		High output at cycle end	Output retained at GTCCRA/GTCCRB compare match
1	1	0	0	1			Low output at GTCCRA/GTCCRB compare match
1	1	0	1	0			High output at GTCCRA/GTCCRB compare match
1	1	0	1	1			Output toggled at GTCCRA/GTCCRB compare match
1	1	1	0	0		Output toggled at cycle end	Output retained at GTCCRA/GTCCRB compare match
1	1	1	0	1			Low output at GTCCRA/GTCCRB compare match
1	1	1	1	0			High output at GTCCRA/GTCCRB compare match
1	1	1	1	1			Output toggled at GTCCRA/GTCCRB compare match

Note 1. The cycle end means an overflow (GTCNT changes from GTPR to 0 in up-counting), an underflow (GTCNT changes from 0 to GTPR in down-counting), or counter clearing for saw-wave mode, and means a trough (GTCNT changes from 0 to 1) for triangle-wave mode.

Note 2. When the timing of a cycle end and the timing of a GTCCRA/GTCCRB compare match are the same in a compare-match operation, the b3 and b2 settings are given priority in saw-wave PWM mode, and the b1 and b0 settings are given priority in any other mode.

Note 3. In event count operation where at least one bit in GTUPSR or GTDNSR is set to 1, the setting of b3 and b2 is ignored.

20.2.15 GTINTAD : General PWM Timer Interrupt Output Setting Register

Base address: GPT32n = 0x4016_9000 + 0x0100 × n (n = 0, 1)
GPT16m = 0x4016_9000 + 0x0100 × m (m = 2 to 5)

Offset address: 0x38

Bit position:	31	30	29	28	27	26	25	24	23	22	21	20	19	18	17	16
Bit field:	—	GRPABL	GRPABH	—	—	—	GRP[1:0]		—	—	—	—	—	—	—	—
Value after reset:	0	0	0	0	0	0	0	0	0	0	0	0	0	0	0	0

Bit position:	15	14	13	12	11	10	9	8	7	6	5	4	3	2	1	0
Bit field:	—	—	—	—	—	—	—	—	—	—	—	—	—	—	—	—
Value after reset:	0	0	0	0	0	0	0	0	0	0	0	0	0	0	0	0

Bit	Symbol	Function	R/W
23:0	—	These bits are read as 0. The write value should be 0.	R/W
25:24	GRP[1:0]	Output Disable Source Select 0 0: Group A output disable source is selected 0 1: Group B output disable source is selected 1 0: Group C output disable source is selected 1 1: Group D output disable source is selected	R/W
28:26	—	These bits are read as 0. The write value should be 0.	R/W
29	GRPABH	Same Time Output Level High Disable Request Enable 0: Same time output level high disable request disabled 1: Same time output level high disable request enabled	R/W
30	GRPABL	Same Time Output Level Low Disable Request Enable 0: Same time output level low disable request disabled 1: Same time output level low disable request enabled	R/W
31	—	This bit is read as 0. The write value should be 0.	R/W

The GTINTAD enables or disables interrupt requests and output disable requests.

GRP[1:0] bits (Output Disable Source Select)

These bits select the group of output disable request from GPT to POEG and the group of output disable for GTIOCnA pin and GTIOCnB pin from POEG to GPT.

The output disable request to POEG is output to the group selected in the GRP[1:0] bit, with dead-time errors, simultaneous high output, and simultaneous low output factors following their respective disable request enable bits.

GTST.ODF shows the request of the output disable source group that is selected with the GRP[1:0] bits. Set the GRP[1:0] bits when both GTIOR.OAE and GTIOR.OBE bits are 0.

If the POEG other than the group connected to GPT is selected in the GRP[1:0] bits, the ODF flag is always 0, and the status never changes to the output disable state.

GRPABH bit (Same Time Output Level High Disable Request Enable)

The GRPABH bit enables or disables the output disable request when the GTIOCnA pin and GTIOCnB pin output 1 at the same time.

GRPABL bit (Same Time Output Level Low Disable Request Enable)

The GRPABL bit enables or disables the output disable request when the GTIOCnA pin and GTIOCnB pin output 0 at the same time.

20.2.16 GTST : General PWM Timer Status Register

Base address: GPT32n = 0x4016_9000 + 0x0100 × n (n = 0, 1)
GPT16m = 0x4016_9000 + 0x0100 × m (m = 2 to 5)

Offset address: 0x3C

Bit position:	31	30	29	28	27	26	25	24	23	22	21	20	19	18	17	16
Bit field:	PCF*2	OABLF	OABHF	—	—	—	—	ODF	—	—	—	—	—	—	—	—
Value after reset:	0	0	0	0	0	0	0	0	0	0	0	0	0	0	0	0

Bit position:	15	14	13	12	11	10	9	8	7	6	5	4	3	2	1	0
Bit field:	TUCF	—	—	—	—	—	—	—	TCFPU	TCFPO	TCFF	TCFE	TCFD	TCFC	TCFB	TCFA
Value after reset:	1	0	0	0	0	0	0	0	0	0	0	0	0	0	0	0

Bit	Symbol	Function	R/W
0	TCFA	Input Capture/Compare Match Flag A 0: No input capture/compare match of GTCCRA is generated 1: An input capture/compare match of GTCCRA is generated	R/W*1
1	TCFB	Input Capture/Compare Match Flag B 0: No input capture/compare match of GTCCRB is generated 1: An input capture/compare match of GTCCRB is generated	R/W*1
2	TCFC	Input Compare Match Flag C 0: No compare match of GTCCRC is generated 1: A compare match of GTCCRC is generated	R/W*1
3	TCFD	Input Compare Match Flag D 0: No compare match of GTCCRD is generated 1: A compare match of GTCCRD is generated	R/W*1
4	TCFE	Input Compare Match Flag E 0: No compare match of GTCCRE is generated 1: A compare match of GTCCRE is generated	R/W*1
5	TCFF	Input Compare Match Flag F 0: No compare match of GTCCRF is generated 1: A compare match of GTCCRF is generated	R/W*1
6	TCFPO	Overflow Flag 0: No overflow (crest) occurred 1: An overflow (crest) occurred	R/W*1
7	TCFPU	Underflow Flag 0: No underflow (trough) occurred 1: An underflow (trough) occurred	R/W*1
14:8	—	These bits are read as 0. The write value should be 0.	R/W
15	TUCF	Count Direction Flag 0: GTCNT counter counts downward 1: GTCNT counter counts upward	R
23:16	—	These bits are read as 0. The write value should be 0.	R/W
24	ODF	Output Disable Flag 0: No output disable request is generated 1: An output disable request is generated	R
28:25	—	These bits are read as 0. The write value should be 0.	R/W
29	OABHF	Same Time Output Level High Flag 0: No simultaneous generation of 1 both for the GTIOCA and GTIOCB pins has occurred. 1: A simultaneous generation of 1 both for the GTIOCA and GTIOCB pins has occurred.	R

Bit	Symbol	Function	R/W
30	OABLF	Same Time Output Level Low Flag 0: No simultaneous generation of 0 both for the GTIOCA and GTIOCB pins has occurred. 1: A simultaneous generation of 0 both for the GTIOCA and GTIOCB pins has occurred.	R
31	PCF*2	Period Count Function Finish Flag 0: No period count function finish has occurred 1: A period count function finish has occurred	R/W*1

Note 1. Only 0 can be written to this bit. Do not write 1.
Note 2. This bit is only available in GPT320, GPT321, GPT162 to GPT164. In GPT165, this bit is read as 0. The write value should be 0.

The GTST indicates the status of the GPT.

TCFA flag (Input Capture/Compare Match Flag A)

The TCFA flag indicates the status for the input capture or compare match of GTCCRA.

[Setting conditions]

- GTCNT = GTCCRA, when the GTCCRA register functions as a compare match register
- GTCNT counter value is transferred to GTCCRA by the input capture signal when the GTCCRA register functions as an input capture register.

[Clearing condition]

- 0 is written to this flag.

TCFB flag (Input Capture/Compare Match Flag B)

The TCFB flag indicates the status for the input capture or compare match of GTCCRB.

[Setting conditions]

- GTCNT = GTCCRB, when the GTCCRB register functions as a compare match register
- GTCNT counter value is transferred to GTCCRB by the input capture signal when the GTCCRB register functions as an input capture register.

[Clearing condition]

- 0 is written to this flag.

TCFC flag (Input Compare Match Flag C)

The TCFC flag indicates the status for the compare match of GTCCRC.

When GTCCRC performs buffer operation, GTCCRC does not perform compare match.

[Setting condition]

- GTCNT = GTCCRC.

[Clearing condition]

- 0 is written to this flag.

[Not comparing condition]

- GTCR.MD[2:0] = 001b (saw-wave one-shot pulse mode)
- GTCR.MD[2:0] = 110b (triangle-wave PWM mode 3)
- GTBER.CCRA[1:0] = 01b, 10b, 11b (GTCCRC performs buffer operation).

TCFD flag (Input Compare Match Flag D)

The TCFD flag indicates the status for the compare match of GTCCRD.

When GTCCRD performs buffer operation, GTCCRD does not perform compare match.

[Setting condition]

- GTCNT = GTCCRD.

[Clearing condition]

- 0 is written to this flag.

[Not comparing condition]

- GTCR.MD[2:0] = 001b (saw-wave one-shot pulse mode)
- GTCR.MD[2:0] = 110b (Triangle-wave PWM mode 3)
- GTBER.CCRA[1:0] = 10b, 11b (GTCCRD performs buffer operation).

TCFE flag (Input Compare Match Flag E)

The TCFE flag indicates the status for the compare match of GTCCRE.

When GTCCRE performs buffer operation, GTCCRE does not perform compare match.

[Setting condition]

- GTCNT = GTCCRE.

[Clearing condition]

- 0 is written to this flag.

[Not comparing condition]

- GTCR.MD[2:0] = 001b (saw-wave one-shot pulse mode)
- GTCR.MD[2:0] = 110b (Triangle-wave PWM mode 3)
- GTBER.CCRB[1:0] = 01b, 10b, 11b (GTCCRE performs buffer operation).

TCFF flag (Input Compare Match Flag F)

The TCFF flag indicates the status for the compare match of GTCCRF.

When GTCCRF performs buffer operation, GTCCRF does not perform compare match.

[Setting condition]

- GTCNT = GTCCRF.

[Clearing condition]

- 0 is written to this flag.

[Not comparing condition]

- GTCR.MD[2:0] = 001b (saw-wave one-shot pulse mode)
- GTCR.MD[2:0] = 110b (Triangle-wave PWM mode 3)
- GTBER.CCRB[1:0] = 10b, 11b (GTCCRF performs buffer operation).

TCFPO flag (Overflow Flag)

The TCFPO flag indicates when an overflow or crest has occurred.

[Setting conditions]

- In saw-wave mode, an overflow (GTCNT changes from GTPR to 0 in up-counting) has occurred
- In triangle-wave mode, a crest (GTCNT changes from GTPR to GTPR - 1) has occurred
- In counting by hardware sources, an overflow (GTCNT changes from GTPR to 0 in up-counting) has occurred.

[Clearing condition]

- 0 is written to this flag.

TCFPU flag (Underflow Flag)

The TCFPU flag indicates when an underflow or trough has occurred.

[Setting conditions]

- In saw-wave mode, an underflow (GTCNT changes from 0 to GTPR in down-counting) has occurred
- In triangle-wave mode, a trough (GTCNT changes from 0 to 1) has occurred
- In counting by hardware sources, an underflow (GTCNT changes from 0 to GTPR in down-counting) has occurred.

[Clearing condition]

- 0 is written to this bit.

TUCF flag (Count Direction Flag)

The TUCF flag indicates the count direction of GTCNT. In event count operation, this flag is set to 1 in up-counting and to 0 in down-counting.

ODF flag (Output Disable Flag)

The ODF flag shows the request of the output disable source group that is selected in the GRP[1:0] bits.

When output is disabled, an output disable control is not released within the same cycle in which an output disable request is negated. It is released in the next cycle.

OABHF flag (Same Time Output Level High Flag)

The OABHF flag indicates that the GTIOCnA pin and GTIOCnB pin output 1 at the same time.

When the GTIOCnA or GTIOCnB pin outputs 0, this flag returns to 0. This flag is read only. Writing 0 to clear the flag is prohibited.

When the output disable request by the OABHF flag is enabled (GTINTAD.GRPABH = 1), the OABHF flag is output to POEG as an output disable request. The GPT does not have an interrupt to indicate that outputs have been simultaneous driven to the high level. Use the interrupt function in the POEG if this is necessary.

[Setting condition]

- The GTIOCnA and GTIOCnB pins output 1 at the same time when both OAE and OBE bits are set to 1.

[Clearing conditions]

- The GTIOCnA pin output value is different from the GTIOCnB pin output value when both OAE and OBE bits are set to 1
- The GTIOCnA and GTIOCnB pins output 0 at the same time when both OAE and OBE bits are set to 1
- Either the OAE bit or OBE bit is set to 0.

OABLF flag (Same Time Output Level Low Flag)

The OABLF flag indicates that the GTIOCnA and GTIOCnB pins output 0 at the same time.

When the GTIOCnA pin or GTIOCnB pin outputs 1, this flag returns to 0. This flag is read only. Writing 0 to clear the flag is prohibited.

When the output disable request by the OABLF flag is enabled (GTINTAD.GRPABL = 1), the OABLF flag is output to POEG as an output disable request. The GPT does not have an interrupt to indicate that outputs have been simultaneous driven to the low level. Use the interrupt function in the POEG if this is necessary.

[Setting condition]

- The GTIOCnA and GTIOCnB pins output 0 at the same time when both OAE and OBE bits are set to 1.

[Clearing conditions]

- The GTIOCnA pin output value is different from the GTIOCnB pin output value when both OAE and OBE bits are set to 1
- The GTIOCnA and GTIOCnB pins output 1 at the same time when both OAE and OBE bits are set to 1
- Either the OAE bit or the OBE bit is set to 0.

The compare-target signals to generate the OABHF/OABLF flag are the compare match outputs (PWM outputs) signals before they are masked by the output disable function. Even during the output disable condition, compare match operation continues internally, where the OABHF or OABLF flag is updated based on the operation results.

PCF*2 flag (Period Count Function Finish Flag)

This bit is status flag of period count function finish.

[Setting condition]

- The GTPC.PCEN bit is 1 and the GTPC.PCNT counter is 1 at the end of cycle.
- The GTPC.PCEN bit is 1 and the GTPC.PCNT counter is 0 at the count clock.

[Clearing condition]

- 0 is written to this bit.

20.2.17 GTBER : General PWM Timer Buffer Enable Register

Base address: GPT32n = 0x4016_9000 + 0x0100 × n (n = 0, 1)
GPT16m = 0x4016_9000 + 0x0100 × m (m = 2 to 5)

Offset address: 0x40

Bit position:	31	30	29	28	27	26	25	24	23	22	21	20	19	18	17	16
Bit field:	—	—	—	—	—	—	—	—	—	CCRSWT	PR[1:0]		CCRB[1:0]		CCRA[1:0]	
Value after reset:	0	0	0	0	0	0	0	0	0	0	0	0	0	0	0	0

Bit position:	15	14	13	12	11	10	9	8	7	6	5	4	3	2	1	0
Bit field:	—	—	—	—	—	—	—	—	—	—	—	—	—	—	BD1	BD0
Value after reset:	0	0	0	0	0	0	0	0	0	0	0	0	0	0	0	0

Bit	Symbol	Function	R/W
0	BD0	GTCCR Buffer Operation Disable 0: Buffer operation is enabled 1: Buffer operation is disabled	R/W
1	BD1	GTPR Buffer Operation Disable 0: Buffer operation is enabled 1: Buffer operation is disabled	R/W
15:2	—	These bits are read as 0. The write value should be 0.	R/W
17:16	CCRA[1:0]	GTCCRA Buffer Operation 0 0: No buffer operation 0 1: Single buffer operation (GTCCRA ↔GTCCRC) Others: Double buffer operation (GTCCRA ↔ GTCCRC ↔ GTCCRD)	R/W
19:18	CCRB[1:0]	GTCCRB Buffer Operation 0 0: No buffer operation 0 1: Single buffer operation (GTCCRB ↔ GTCCRE) Others: Double buffer operation (GTCCRB ↔ GTCCRE ↔ GTCCRF)	R/W
21:20	PR[1:0]	GTPR Buffer Operation 0 0: No buffer operation 0 1: Single buffer operation (GTPBR → GTPR) Others: Setting prohibited	R/W
22	CCRSWT	GTCCRA and GTCCRB Forcible Buffer Operation Writing 1 to this bit forces a buffer transfer of GTCCRA and GTCCRB. This bit automatically returns to 0 after 1 is written. This bit is read as 0.	W
31:23	—	These bits are read as 0. The write value should be 0.	R/W

The GTBER register provides settings for the buffer operation. Set the GTBER register while the GTCNT counter is stopped.

BD0 bit (GTCCR Buffer Operation Disable)

The BD0 bit disables the buffer operation using GTCCRA, GTCCRB, GTCCRC, GTCCRD, GTCCRE, and GTCCRF combined.

When GTDTCR.TDE is 1 and when BD0 is set to 0, GTCCRB does not perform buffer operation. The GTCCRB register is automatically set to a compare match value for negative-phase waveform with dead time.

A value for the BD0 bit in the channel related to the position of the bit written with 1 by the GTSECSR register can be set when 1 is written to the GTSECR.SBDCE or GTSECR.SBDCD.

BD1 bit (GTPR Buffer Operation Disable)

The BD1 bit disables the buffer operation using GTPR and GTPBR combined.

A value for the BD1 bit in the channel related to the position of the bit written with 1 by the GTSECSR register can be set when 1 is written to the GTSECR.SBDPE or GTSECR.SBDPD.

CCRA[1:0] bits (GTCCRA Buffer Operation)

The CCRA[1:0] bits set the buffer operation with GTCCRA, GTCCRC, and GTCCRD combined. When the buffer operation is restricted by the operating mode set in GTCR, the GTCR setting is given priority.

The buffer operation mode is fixed in saw-wave one-shot pulse mode or triangle-wave PWM mode 3 (64-bit transfer at trough).

CCRB[1:0] bits (GTCCRB Buffer Operation)

The CCRB[1:0] bits set the buffer operation using GTCCRB, GTCCRE, and GTCCRF combined. When the buffer operation is restricted by the operating mode set in GTCR, the GTCR setting is given priority.

The buffer operation mode is fixed in saw-wave one-shot pulse mode or triangle-wave PWM mode 3 (64-bit transfer at trough).

PR[1:0] bits (GTPR Buffer Operation)

The PR[1:0] bits set the buffer operation with GTPR and GTPBR combined.

CCRSWT bit (GTCCRA and GTCCRB Forcible Buffer Operation)

Writing 1 to the CCRSWT bit forces a buffer transfer of GTCCRA and GTCCRB. This bit automatically returns to 0 after the 1 is written. This bit is read as 0, and is valid only when counting is stopped with a compare match operation specified.

20.2.18 GTCNT : General PWM Timer Counter

Base address: GPT32n = 0x4016_9000 + 0x0100 × n (n = 0, 1)
GPT16m = 0x4016_9000 + 0x0100 × m (m = 2 to 5)

Offset address: 0x48

Bit position:	31																															0
Bit field:																																
Value after reset:	0	0	0	0	0	0	0	0	0	0	0	0	0	0	0	0	0	0	0	0	0	0	0	0	0	0	0	0	0	0	0	0

Bit	Symbol	Function	R/W
31:0	n/a	GTCNT is a 32-bit read/write counter for GPT32n (n = 0, 1). For GPT16m (m = 2 to 5), GTCNT is a 16-bit register. GTCNT can only be written to after counting stops. For GPT16m, the upper 16 bits for access in a 32-bit unit are always read as 0x0000, and writing to these bits is ignored. GTCNT must be set within the range of 0 ≤ GTCNT ≤ GTPR.	R/W

20.2.19 GTCCRk : General PWM Timer Compare Capture Register k (k = A to F)

Base address: GPT32n = 0x4016_9000 + 0x0100 × n (n = 0, 1)
GPT16m = 0x4016_9000 + 0x0100 × m (m = 2 to 5)

Offset address: 0x4C (GTCCRA)
0x50 (GTCCRB)
0x54 (GTCCRC)
0x58 (GTCCRE)
0x5C (GTCCRD)
0x60 (GTCCRF)

Bit position:	31																															0
Bit field:																																
Value after reset:	1 *1	1 *1	1 *1	1 *1	1 *1	1 *1	1 *1	1 *1	1 *1	1 *1	1 *1	1 *1	1 *1	1 *1	1 *1	1 *1	1	1	1	1	1	1	1	1	1	1	1	1	1	1	1	1

Bit	Symbol	Function	R/W
31:0	n/a	GTCCRk registers are read/write registers. The effective size of GTCCRk is the same as GTCNT (16- or 32-bit). If the effective size of GTCCRk is 16 bits, the upper 16 bits for access in a 32-bit unit are always read as 0x0000, and writing to these bits is ignored. GTCCRA and GTCCRB are registers used for both output compare and input capture. GTCCRC and GTCCRE are compare match registers, and can also function as buffer registers for GTCCRA and GTCCRB. GTCCRD and GTCCRF are compare match registers, and can also function as buffer registers for GTCCRC and GTCCRE (double-buffer registers for GTCCRA and GTCCRB).	R/W

Note 1. For GPT16m (m = 2 to 5), the value of the upper 16 bits after reset is 0x0000.

20.2.20 GTPR : General PWM Timer Cycle Setting Register

Base address: GPT32n = 0x4016_9000 + 0x0100 × n (n = 0, 1)
GPT16m = 0x4016_9000 + 0x0100 × m (m = 2 to 5)

Offset address: 0x64

Bit position:	31																															0
Bit field:																																
Value after reset:	1 *1	1 *1	1 *1	1 *1	1 *1	1 *1	1 *1	1 *1	1 *1	1 *1	1 *1	1 *1	1 *1	1 *1	1 *1	1 *1	1	1	1	1	1	1	1	1	1	1	1	1	1	1	1	1

Bit	Symbol	Function	R/W
31:0	n/a	GTPR is a read/write register that sets the maximum count value of GTCNT. The effective size of GTPR is the same as GTCNT (16- or 32-bit). If the effective size of GTPR is 16 bits, the upper 16 bits for access in a 32-bit unit are always read as 0x0000, and writing to these bits is ignored. For saw waves, the value of (GTPR + 1) is the cycle. For triangle waves, the value of (GTPR value × 2) is the cycle.	R/W

Note 1. For GPT16m (m = 2 to 5), the value of the upper 16 bits after reset is 0x0000.

20.2.21 GTPBR : General PWM Timer Cycle Setting Buffer Register

Base address: GPT32n = 0x4016_9000 + 0x0100 × n (n = 0, 1)
GPT16m = 0x4016_9000 + 0x0100 × m (m = 2 to 5)

Offset address: 0x68

Bit position:	31																															0
Bit field:																																
Value after reset:	1 *1	1 *1	1 *1	1 *1	1 *1	1 *1	1 *1	1 *1	1 *1	1 *1	1 *1	1 *1	1 *1	1 *1	1 *1	1 *1	1	1	1	1	1	1	1	1	1	1	1	1	1	1	1	1

Bit	Symbol	Function	R/W
31:0	n/a	GTPBR is a read/write register that functions as a buffer register for GTPR. The effective size of GTPBR is the same as GTCNT (16- or 32-bit). If the effective size of GTPBR is 16 bits, the upper 16 bits for access in a 32-bit unit are always read as 0x0000, and writing to these bits is ignored.	R/W

Note 1. For GPT16m (m = 2 to 5), the value of the upper 16 bits after reset is 0x0000.

20.2.22 GTDTCR : General PWM Timer Dead Time Control Register

Base address: GPT32n = 0x4016_9000 + 0x0100 × n (n = 0, 1)
GPT16m = 0x4016_9000 + 0x0100 × m (m = 2 to 5)

Offset address: 0x88

Bit position:	31	30	29	28	27	26	25	24	23	22	21	20	19	18	17	16
Bit field:	—	—	—	—	—	—	—	—	—	—	—	—	—	—	—	—
Value after reset:	0	0	0	0	0	0	0	0	0	0	0	0	0	0	0	0

Bit position:	15	14	13	12	11	10	9	8	7	6	5	4	3	2	1	0
Bit field:	—	—	—	—	—	—	—	—	—	—	—	—	—	—	—	TDE
Value after reset:	0	0	0	0	0	0	0	0	0	0	0	0	0	0	0	0

Bit	Symbol	Function	R/W
0	TDE	Negative-Phase Waveform Setting 0: GTCCRB is set without using GTDVU 1: GTDVU is used to set the compare match value for negative-phase waveform with dead time automatically in GTCCRB	R/W
31:1	—	These bits are read as 0. The write value should be 0.	R/W

GTDTCR enables automatic setting of a compare match value for negative-phase waveform with dead time. GPT has a dead time control function and the GTDVU register is used for setting dead time value.

TDE bit (Negative-Phase Waveform Setting)

The TDE bit specifies whether to use GTDVU. When GTDVU is used, the compare match value for a negative-phase waveform with dead time obtained by the compare match value of a positive-phase waveform (GTCCRA) and the dead time value (GTDVU) is automatically set in GTCCRB.

The TDE bit setting is ignored in saw-wave PWM mode, and the GTCCRB is not automatic setting.

The GTCCRB value is automatically set and has the following upper and lower limit values. If the obtained GTCCRB value is not within the upper or lower limit, the following limit value is set in GTCCRB.

- Triangle waves:
  Upper limit value: GTPR − 1
  Lower limit value: 1 in up-counting, 0 in down-counting
- Saw-wave one-shot pulse mode:
  Upper limit value: GTPR
  Lower limit value: 0

20.2.23 GTDVU : General PWM Timer Dead Time Value Register U

Base address: GPT32n = 0x4016_9000 + 0x0100 × n (n = 0, 1)
GPT16m = 0x4016_9000 + 0x0100 × m (m = 2 to 5)

Offset address: 0x8C

Bit position:	31																															0
Bit field:																																
Value after reset:	1 *1	1 *1	1 *1	1 *1	1 *1	1 *1	1 *1	1 *1	1 *1	1 *1	1 *1	1 *1	1 *1	1 *1	1 *1	1 *1	1	1	1	1	1	1	1	1	1	1	1	1	1	1	1	1

Bit	Symbol	Function	R/W
31:0	n/a	GTDVU is a read/write register that sets the dead time for generating PWM waveforms with dead time. The effective size of GTDVU is the same as GTCNT (16 or 32 bits). If the effective size of GTDVU is 16 bits, the upper 16 bits for access in a 32-bit unit are always read as 0x0000, and writing to these bits is ignored. For saw-waves, the GTDVU register controls the front dead time and the GTDVD register controls the rear dead time, regardless of whether the count is up or down. Setting a GTDVU value greater than or equal to GTPR is prohibited. When using the automatic dead time setting function, do not set a value that makes a change point of the waveform exceeding the count period. The set value can be confirmed by reading from GTCCRB. When GTDVU is used, writing to GTCCRB is prohibited. When this register is set to 0, waveforms without dead time are output. While GPT is running, changing the GTDVU values is prohibited. To change GTDVU to a new value, stop the GPT with the CST bit in the GTCR register.	R/W

Note 1. For GPT16m (m = 2 to 5), the value of the upper 16 bits after reset is 0x0000.

20.2.24 GTICLF : General PWM Timer Inter Channel Logical Operation Function Setting Register

Base address: GPT32n = 0x4016_9000 + 0x0100 × n (n = 0, 1)
GPT16m = 0x4016_9000 + 0x0100 × m (m = 2 to 5)

Offset address: 0xB8

Bit position:	31	30	29	28	27	26	25	24	23	22	21	20	19	18	17	16
Bit field:	—	—	—	—	—	—	ICLFSELD[5:0]						—	ICLFB[2:0]		
Value after reset:	0	0	0	0	0	0	0	0	0	0	0	0	0	0	0	0

Bit position:	15	14	13	12	11	10	9	8	7	6	5	4	3	2	1	0
Bit field:	—	—	—	—	—	—	ICLFSELC[5:0]						—	ICLFA[2:0]		
Value after reset:	0	0	0	0	0	0	0	0	0	0	0	0	0	0	0	0

Bit	Symbol	Function	R/W
2:0	ICLFA[2:0]	GTIOCnA Output Logical Operation Function Select 0 0 0: A (no delay) 0 0 1: NOT A (no delay) 0 1 0: C (1 PCLKD delay) 0 1 1: NOT C (1 PCLKD delay) 1 0 0: A AND C (1 PCLKD delay)*2 1 0 1: A OR C (1 PCLKD delay)*2 1 1 0: A EXOR C (1 PCLKD delay)*2 1 1 1: A NOR C (1 PCLKD delay)*2	R/W
3	—	This bit is read as 0. The write value should be 0.	R/W

Bit	Symbol	Function	R/W
9:4	ICLFSELC[5:0]	Inter Channel Signal C Select*1*2 0x00: GTIOC0A 0x01: GTIOC0B 0x02: GTIOC1A 0x03: GTIOC1B ⋮ ⋮ 0x0A: GTIOC5A 0x0B: GTIOC5B Others: Setting prohibited	R/W
15:10	—	These bits are read as 0. The write value should be 0.	R/W
18:16	ICLFB[2:0]	GTIOCnB Output Logical Operation Function Select 0 0 0: B (no delay) 0 0 1: NOT B (no delay) 0 1 0: D (1 PCLKD delay) 0 1 1: NOT D (1 PCLKD delay) 1 0 0: B AND D (1 PCLKD delay)*3 1 0 1: B OR D (1 PCLKD delay)*3 1 1 0: B EXOR D (1 PCLKD delay)*3 1 1 1: B NOR D (1 PCLKD delay)*3	R/W
19	—	This bit is read as 0. The write value should be 0.	R/W
25:20	ICLFSELD[5:0]	Inter Channel Signal D Select*1*3 0x00: GTIOC0A 0x01: GTIOC0B 0x02: GTIOC1A 0x03: GTIOC1B ⋮ ⋮ 0x0A: GTIOC5A 0x0B: GTIOC5B Others: Setting prohibited	R/W
31:26	—	These bits are read as 0. The write value should be 0.	R/W

Note 1. The signal before performing output disable control is selected.
Note 2. When channel's own GTIOCnA is selected, C is treated as "1".
Note 3. When channel's own GTIOCnB is selected, D is treated as "1".

The GTICLF register sets the logical operation function between compare match outputs. The logical operation is performed with the signals that the duty 0%/100% control is performed after compare match control. (The output disable control is performed with the signal after logical operation.)

Access in 8-bit units to GTICLF is prohibited.

ICLFm[2:0] bit (GTIOCnm Output Logical Operation Function Select) (m = A, B)

These bits select the logical operation function between signals before performing output disable control for GTIOCnm. To prevent hazard to the GPT output, the signal after logical operation is latched with PCLKD. After latching, the output disable control is performed. When the logical operation function which causes the delay of 1 PCLKD is selected, the output enable signal is also delayed with 1 PCLKD and input to the output disable control.

When the same signal to operate logical function AND, OR, EXOR and NOR is selected, one signal is treated as 1.

ICLFSELk[5:0] bit (Inter Channel Signal k Select) (k = C, D)

These bits select the signal k that the logical operation is performed with the signal before performing output disable control for GTIOCnm.

20.2.25 GTPC : General PWM Timer Period Count Register

Base address: GPT32n = 0x4016_9000 + 0x0100 × n (n = 0, 1)
GPT16m = 0x4016_9000 + 0x0100 × m (m = 2 to 4)

Offset address: 0xBC

Bit position:	31	30	29	28	27	26	25	24	23	22	21	20	19	18	17	16
Bit field:	—	—	—	—	PCNT[11:0]											
Value after reset:	0	0	0	0	0	0	0	0	0	0	0	0	0	0	0	0

Bit position:	15	14	13	12	11	10	9	8	7	6	5	4	3	2	1	0
Bit field:	—	—	—	—	—	—	—	ASTP	—	—	—	—	—	—	—	PCEN
Value after reset:	0	0	0	0	0	0	0	0	0	0	0	0	0	0	0	0

Bit	Symbol	Function	R/W
0	PCEN	Period Count Function Enable 0: Period count function is disabled 1: Period count function is enabled	R/W
7:1	—	These bits are read as 0. The write value should be 0.	R/W
8	ASTP	Automatic Stop Function Enable 0: Automatic stop function is disabled 1: Automatic stop function is enabled	R/W
15:9	—	These bits are read as 0. The write value should be 0.	R/W
27:16	PCNT[11:0]	Period Counter Counter for the number of period	R/W
31:28	—	These bits are read as 0. The write value should be 0.	R/W

The GTPC register counts the number of period.

PCEN bit (Period Count Function Enable)

This bit enables or disables period count function.

Writing is available when counting is both in progress and stopped.

When 1 is written to either the GTSECR.SPCE bit or the GTSECR.SPCD bit, the value is simultaneously set to the PCEN bit in the channels set to 1 by the GTSECSR register.

ASTP bit (Automatic Stop Function Enable)

This bit enables or disables the GTCNT counter automatic stopping after finishing counting the number of period.

When the PCEN bis is 0, writing is available.

When the PCEN bit is 1, writing is disabled.

When the PCEN bit is 1, the ASTP bit is 1, and the PCNT counter is stopped at PCNT = 0, the GTCNT counter is also stopped. When the ASTP bit is 0, the GTCNT counter continues to count.

PCNT[11:0] bit (Period Counter)

This counter counts the number of period.

When the PCEN bis is 0, writing the number of period is available.

When the PCEN bit is 1, writing is disabled, and down-counting is performed at the end of period. In saw-wave mode, the end of period refers to overflow, underflow, or counter clearing. In triangle-wave mode, it refers to trough.

When the PCNT counter is 1 at the end of period, it becomes 0 and counting is stopped.

When the GTCNT counter is stopped while period count function is enabled, the PCNT counter keeps its value. When the GTCNT counter restarts counting and the PCEN bit is 1, the PCNT counter restarts down-counting from the hold value.

When the PCEN bit is changed from 0 to 1 while the PCNT counter is 0 and the ASTP bit is 1, the GTCNT counter is stopped at the count clock immediately after that.

20.2.26 GTSECSR : General PWM Timer Operation Enable Bit Simultaneous Control Channel Select Register

Base address: GPT32n = 0x4016_9000 + 0x0100 × n (n = 0, 1)
GPT16m = 0x4016_9000 + 0x0100 × m (m = 2 to 5)

Offset address: 0xD0

Bit position:	31	30	29	28	27	26	25	24	23	22	21	20	19	18	17	16
Bit field:	—	—	—	—	—	—	—	—	—	—	—	—	—	—	—	—
Value after reset:	0	0	0	0	0	0	0	0	0	0	0	0	0	0	0	0

Bit position:	15	14	13	12	11	10	9	8	7	6	5	4	3	2	1	0
Bit field:	—	—	—	—	—	—	—	—	—	—	SECSEL5	SECSEL4	SECSEL3	SECSEL2	SECSEL1	SECSEL0
Value after reset:	0	0	0	0	0	0	0	0	0	0	0	0	0	0	0	0

Bit	Symbol	Function	R/W
0	SECSEL0	Channel 0 Operation Enable Bit Simultaneous Control Channel Select 0: Disable simultaneous control 1: Enable simultaneous control	R/W
1	SECSEL1	Channel 1 Operation Enable Bit Simultaneous Control Channel Select 0: Disable simultaneous control 1: Enable simultaneous control	R/W
2	SECSEL2	Channel 2 Operation Enable Bit Simultaneous Control Channel Select 0: Disable simultaneous control 1: Enable simultaneous control	R/W
3	SECSEL3	Channel 3 Operation Enable Bit Simultaneous Control Channel Select 0: Disable simultaneous control 1: Enable simultaneous control	R/W
4	SECSEL4	Channel 4 Operation Enable Bit Simultaneous Control Channel Select 0: Disable simultaneous control 1: Enable simultaneous control	R/W
5	SECSEL5	Channel 5 Operation Enable Bit Simultaneous Control Channel Select 0: Disable simultaneous control 1: Enable simultaneous control	R/W
31:6	—	These bits are read as 0. The write value should be 0.	R/W

The GTSECSR register selects an intended channel n (n = 0 to 5) for updating an operation enable bit by the GTSECR register. A bit position for the GTSECSR register indicates a channel number. The GTSECSR register of each channel is a common register, and writing 1 to a bit in the GTSECSR register in any channel and updating it changes a channel, related to the position of the bit written with 1 by the GTSECSR register, to be simultaneously controlled of the operation enable bit by the GTSECR register.

The bit corresponding to channel which security attribution is configured as secure can be read by non-secure access but cannot be written by non-secure access. For example, if GPT channel 0 is configured as secure and other GPTs are configured as non-secure, the SECSEL0 bit cannot be written by non-secure access to GPT321.GTSECSR register, and the simultaneous control status of GPT channel 0 is not changed. When the GPT321.GTSECSR register is read by non-secure access in the same security configuration as the previous example, the simultaneous control status of GPT channel (SECSEL0 bit) can be read.

Access in 8-bit or 16-bit units to GTSECSR is prohibited, and it should be accessed in 32-bit units.

SECSELn bit (Operation Enable Bit Simultaneous Control Channel Select) (n = 0 to 5)

This bit enables or disables the simultaneous control of operation enable in channel n.

When the bit is set to 1, the simultaneous control is enabled, and disabled when the bit is 0.

20.2.27 GTSECR : General PWM Timer Operation Enable Bit Simultaneous Control Register

Base address: GPT32n = 0x4016_9000 + 0x0100 × n (n = 0, 1)
GPT16m = 0x4016_9000 + 0x0100 × m (m = 2 to 5)

Offset address: 0xD4

Bit position:	31	30	29	28	27	26	25	24	23	22	21	20	19	18	17	16
Bit field:	—	—	—	—	—	—	—	SPCD	—	—	—	—	—	—	—	SPCE
Value after reset:	0	0	0	0	0	0	0	0	0	0	0	0	0	0	0	0

Bit position:	15	14	13	12	11	10	9	8	7	6	5	4	3	2	1	0
Bit field:	—	—	—	—	—	—	SBDPD	SBDCD	—	—	—	—	—	—	SBDPE	SBDCE
Value after reset:	0	0	0	0	0	0	0	0	0	0	0	0	0	0	0	0

Bit	Symbol	Function	R/W
0	SBDCE	GTCCR Register Buffer Operation Simultaneous Enable 0: Disable simultaneous enabling GTCCR buffer operations 1: Enable GTCCR register buffer operations simultaneously	R/W
1	SBDPE	GTPR Register Buffer Operation Simultaneous Enable 0: Disable simultaneous enabling GTPR buffer operations 1: Enable GTPR register buffer operations simultaneously	R/W
7:2	—	These bits are read as 0. The write value should be 0.	R/W
8	SBDCD	GTCCR Register Buffer Operation Simultaneous Disable 0: Disable simultaneous disabling GTCCR buffer operations 1: Disable GTCCR register buffer operations simultaneously	R/W
9	SBDPD	GTPR Register Buffer Operation Simultaneous Disable 0: Disable simultaneous disabling GTPR buffer operations 1: Disable GTPR register buffer operations simultaneously	R/W
15:10	—	These bits are read as 0. The write value should be 0.	R/W
16	SPCE	Period Count Function Simultaneous Enable*1 0: Disable simultaneous enabling period count function 1: Enable period count function simultaneously	R/W
23:17	—	These bits are read as 0. The write value should be 0.	R/W
24	SPCD	Period Count Function Simultaneous Disable*1 0: Disable simultaneous disabling period count function 1: Disable period count function simultaneously	R/W
31:25	—	These bits are read as 0. The write value should be 0.	R/W

Note 1. This bit is only available in GPT320, GPT321, GPT162 to GPT164. In GPT165, this bit is read as 0. The write value should be 0.

The GTSECR register simultaneously updates the value for operation enable bits of a channel set by the GTSECSR register.

Writing 1 to a bit in the GTSECR register in any channel and updating it updates an operation enable bit for all channels, related to the position of the bit written with 1 by the all GTSECSR registers.

The GTSECR register of channel which security attribution is configured as secure can not be written by non-secure access. For example, if GPTn is configured as secure and other GPTs are configured as non-secure, the GPTn.GTSECR register cannot be written by non-secure access to GPTn+1.GTSECR register even if the simultaneous control of GPTn is enabled, and the simultaneous control status of GPTn is not changed.

Setting enable and disable bits for the same operation enable bit to 1 in the GTSECR is prohibited.

A bit written to 1 is automatically cleared. When the GTSECR is read, 0 is read.

Access in 8-bit or 16-bit units to the GTSECR register is prohibited, and it should be accessed in 32-bit units.

SBDCE bit (GTCCR Register Buffer Operation Simultaneous Enable)

When 1 is written to this bit, 0 is simultaneously set to a GTBER.BD[0] bit in the channels set to 1 by the GTSECSR register, and buffer operations using the GTCCRA, GTCCRC, and GTCCRD registers and using the GTCCRB, GTCCRE, and GTCCRF registers are enabled.

Simultaneous setting of SBDCE and SBDCD bits to 1 is prohibited.

SBDPE bit (GTPR Register Buffer Operation Simultaneous Enable)

When 1 is written to this bit, 0 is simultaneously set to a GTBER.BD[1] bit in the channels set to 1 by the GTSECSR register, and buffer operations using the GTPR and GTPBR registers are enabled.

Simultaneous setting of SBDPE and SBDPD bits to 1 is prohibited.

SBDCD bit (GTCCR Register Buffer Operation Simultaneous Disable)

When 1 is written to this bit, 1 is simultaneously set to a GTBER.BD[0] bit in the channels set to 1 by the GTSECSR register, and buffer operations using the GTCCRA, GTCCRC, and GTCCRD registers and using the GTCCRB, GTCCRE, and GTCCRF registers are disabled.

Simultaneous setting of SBDCE and SBDCD bits to 1 is prohibited.

SBDPD bit (GTPR Register Buffer Operation Simultaneous Disable)

When 1 is written to this bit, 1 is simultaneously set to a GTBER.BD[1] bit in the channels set to 1 by the GTSECSR register, and buffer operations using the GTPR and GTPBR registers are disabled.

Simultaneous setting of SBDPE and SBDPD bits to 1 is prohibited.

SPCE bit (Period Count Function Simultaneous Enable[*1])

When 1 is written to this bit, 1 is simultaneously set to GTPC.PCEN bit in the channels set to 1 by the GTSECSR register, and period count function is enabled.

Simultaneous setting of SPCE and SPCD bits to 1 is prohibited.

SPCD bit (Period Count Function Simultaneous Disable[*1])

When 1 is written to this bit, 0 is simultaneously set to GTPC.PCEN bit in the channels set to 1 by the GTSECSR register, and period count function is disabled.

Simultaneous setting of SPCE and SPCD bits to 1 is prohibited.

20.2.28 OPSCR : Output Phase Switching Control Register

Base address: GPT_OPS = 0x4016_9A00

Offset address: 0x00

Bit position:	31	30	29	28	27	26	25	24	23	22	21	20	19	18	17	16
Bit field:	NFCS[1:0]		NFEN	—	—	GODF	GRP[1:0]		—	—	ALIGN	RV	INV	N	P	FB
Value after reset:	0	0	0	0	0	0	0	0	0	0	0	0	0	0	0	0

Bit position:	15	14	13	12	11	10	9	8	7	6	5	4	3	2	1	0
Bit field:	—	—	—	—	—	—	—	EN	—	W	V	U	—	WF	VF	UF
Value after reset:	0	0	0	0	0	0	0	0	0	0	0	0	0	0	0	0

Bit	Symbol	Function	R/W
0	UF	Input Phase Soft Setting These bits set the input phase from software settings. Setting these bits is valid when OPSCR.FB = 1.	R/W
1	VF		R/W
2	WF		R/W
3	—	This bit is read as 0. The write value should be 0.	R/W

Bit	Symbol	Function	R/W
4	U	Input U-Phase Monitor This bit monitors the state of the input phase. OPSCR.FB = 0 : External input that are synchronized by PCLKD OPSCR.FB = 1 : Software settings (UF)	R
5	V	Input V-Phase Monitor This bit monitors the state of the input phase. OPSCR.FB = 0 : External input that are synchronized by PCLKD OPSCR.FB = 1 : Software settings (VF)	R
6	W	Input W-Phase Monitor This bit monitors the state of the input phase. OPSCR.FB = 0 : External input that are synchronized by PCLKD OPSCR.FB = 1 : Software settings (WF)	R
7	—	This bit is read as 0. The write value should be 0.	R/W
8	EN	Output Phase Enable 0: Do not output (Hi-Z external pin) 1: Output*1	R/W
15:9	—	These bits are read as 0. The write value should be 0.	R/W
16	FB	External Feedback Signal Enable This bit selects the input phase from software settings and external input. 0: Select the external input 1: Select the soft setting (OPSCR.UF, VF, WF)	R/W
17	P	Positive-Phase Output (P) Control 0: Level signal output 1: PWM signal output	R/W
18	N	Negative-Phase Output (N) Control 0: Level signal output 1: PWM signal output	R/W
19	INV	Output Phase Invert Control 0: Positive logic (active-high) output 1: Negative logic (active-low) output	R/W
20	RV	Output Phase Rotation Direction Reversal Control 0: Positive rotation 1: Reverse rotation	R/W
21	ALIGN	Input Phase Alignment 0: Input phase aligned to PCLKD 1: Input phase aligned to the falling edge of PWM	R/W
23:22	—	These bits are read as 0. The write value should be 0.	R/W
25:24	GRP[1:0]	Output Disabled Source Selection 0 0: Select group A output disable source 0 1: Select group B output disable source 1 0: Select group C output disable source 1 1: Select group D output disable source	R/W
26	GODF	Group Output Disable Function 0: This bit function is ignored 1: Group disable clears the OPSCR.EN bit*1	R/W
28:27	—	These bits are read as 0. The write value should be 0.	R/W
29	NFEN	External Input Noise Filter Enable 0: Do not use a noise filter on the external input 1: Use a noise filter on the external input	R/W
31:30	NFCS[1:0]	External Input Noise Filter Clock Selection Noise filter sampling clock setting of the external input. 0 0: PCLKD/1 0 1: PCLKD/4 1 0: PCLKD/16 1 1: PCLKD/64	R/W

Note 1. When OPSCR.GODF = 1 and the signal value selected by the OPSCR.GRP[1:0] bit is high, the OPSCR.EN bit is set to 0.

The OPSCR register sets the output of the signal waveform required for brushless DC motor control.

UF , VF , WF bits (Input Phase Soft Setting)

The UF , VF , WF bits set the input phase from the software settings. When OPSCR.FB bit is 1, these bits are valid. The set value of the UF /VF /WF takes the place of the U/V/W external input.

U, V, W bits (Input Phase Monitor)

When the OPSCR.FB bit is 0, external inputs that are synchronized by PCLKD are monitored by these bits. When the OPSCR.FB bit is 1, the OPSCR.U, OPSCR.V, and OPSCR.W bits can read the OPSCR.UF , OPSCR.VF , and OPSCR.WF bits.

EN bit (Output Phase Enable)

The EN bit controls the output enable signal of output phase (positive phase/negative phase).

When the OPSCR.EN bit is 1, the signal waveform is output.

When the OPSCR.EN bit is 0, first set OPSCR.FB, OPSCR.UF /VF /WF (software setting is selected), OPSCR.P/N, OPSCR.INV, OPSCR.RV, OPSCR.ALIGN, OPSCR.GRP[1:0], OPSCR.GODF, OPSCR.NFEN, OPSCR.NFCS. Then, set the EN bit to 1. The EN bit should be set when output disable request does not occur from POEG. Also when OPSCR.GODF is 1 and the signal value selected in the OPSCR.GRP[1:0] bit is high, the OPSCR.EN bit is set to 0. Even if 1 is written by software, the EN bit remains at 0.

For the return, after clearing the Output Disable Request by software, set the EN bit to 1.

Priority order of the EN bit is as follows (when the conflict occurs).

When writing 1 by software and clearing to 0 by the Output Disable Request conflict for the EN bit, clearing to 0 by the Output Disable Request is enabled.

FB bit (External Feedback Signal Enable)

The FB bit selects the input phase from the software settings (OPSCR.UF, VF, WF) and external input such as a Hall element.

P bit (Positive-Phase Output (P) Control)

The P bit selects one of the level signal output or PWM signal output for the positive-phase output (GTOUUP, GTOVUP and GTOWUP pins).

N bit (Negative-Phase Output (N) Control)

The N bit selects one of the level signal output or PWM signal output for the negative-phase output (GTOULO, GTOVLO and GTOWLO pins).

INV bit (Output Phase Invert Control)

The INV bit selects one of the positive logic (active-high) output or negative logic (active-low) output for the output phase.

RV bit (Output Phase Rotation Direction Reversal Control)

The RV bit reverses the direction of rotation of the motor by inverting the input phase.

ALIGN bit (Input Phase Alignment)

The ALIGN bit selects the PCLKD or PWM for the sampling of the input phase (input phase is specified in the OPSCR.FB bit).

When OPSCR.ALIGN bit is 0, input phase is aligned to PCLKD.

Note: When the chopping is performed, there are cases where the PWM width of output is shorter than the width of the PWM used to chop just before or after switching of output phase, depending on the phase difference between the phase output switch timing and the phase of PWM.

When OPSCR.ALIGN bit is 1, input phase is aligned with the falling edge of PWM.

GRP[1:0] bit (Output Disabled Source Selection)

The GRP[1:0] bit selects the output disable source.

The GRP bits should be set when GODF bit is 0. If GRP bits select a POEG except for the connected groups, the status of output pin never change to disable.

GODF bit (Group Output Disable Function)

When OPSCR.GODF is 1 and the signal value selected by the OPSCR.GRP[1:0] bit is high, the OPSCR.EN bit is set to 0.

When OPSCR.GODF bit is 0, this bit is ignored.

The GODF bit should be set when output disable request does not occur from POEG.

NFEN bit (External Input Noise Filter Enable)

The NFEN bit selects the noise filter for external input. When OPSCR.NFEN bit is 0, a noise filter for the external input is not used.

Note: Set this bit during the EN bit is 0 to avoid generation of unintentional internal edge caused by switching this bit.

NFCS[1:0] bits (External Input Noise Filter Clock Selection)

The NFCS[1:0] bits select the clock for the external input noise filter. When the OPSCR.NFEN bit is 1, noise filter sampling clock setting of the external input is enabled.

1. Set the NFCS[1:0].
2. Wait for 2 cycles.
3. Set the OPSCR.EN bit to 1.

20.3 Operation

20.3.1 Basic Operation

Each channel has a 32-bit and 16-bit timer that performs a periodic count operation using the count clock and hardware sources. The count function provides both up-counting and down-counting. The GTPR controls the count cycle.

When the GTCNT counter value matches the value in GTCCRA or GTCCRB, the output from the associated GTIOCnA or GTIOCnB can be changed (n = 0 to 5). GTCCRA or GTCCRB can be used as an input capture register with hardware resources.

GTCCRC and GTCCRD can function as buffer registers for GTCCRA. GTCCRE and GTCCRF can function as buffer registers for GTCCRB.

20.3.1.1 Counter operation

(1) Counter start and stop

The counter of each channel starts the count operation when GTCR.CST is set to 1, and stops counting when the bit is set to 0. The GTCR.CST bit value is changed by the following sources:

- Writing to GTCR register
- Writing 1 to the bit in GTSTR associated with the GPT channel number when the GTSSR.CSTRT bit set to 1
- Writing 1 to the bit in GTSTP associated with the GPT channel number when the GTPSR.CSTOP bit set to 1
- The hardware source selected in the GTSSR register
- The hardware source selected in the GTPSR register
- Completion of the period count function while the GTPC.ASTP bit is 1

(2) Periodic count operation in up-counting by count clock

The GTCNT counter in each channel starts up-counting when the associated GTCR.CST bit is set to 1 with GTUPSR and GTDNSR registers set to 0x00000000. When the GTCNT value changes from the GTPR value to 0 (overflow), the GTST.TCFPO flag is set to 1, and the overflow interrupt(GPTn_OVF) is also generated. After GTCNT overflows, up-counting resumes from 0x00000000.

Figure 20.3 shows an example of a periodic count operation in up-counting by the count clock.

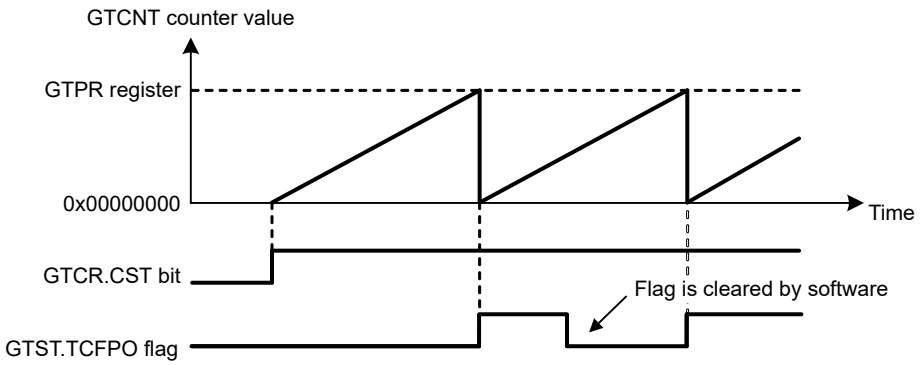

Note: The base address of registers are the same.

Figure 20.3 Example of periodic count operation in up-counting by the count clock

Table 20.5 shows an example for setting periodic count operation in up-counting by the count clock.

Table 20.5 Example for setting a periodic count operation in up-counting by the count clock

No.	Step Name	Description
1	Set operating mode	Set the operating mode with the GTCR.MD[2:0] bits. In Figure 20.3, 000b (saw-wave PWM mode) is set.
2	Set count direction	Select the count direction (up or down) with the GTUDDTYC register. In Figure 20.3, after 11b is set in the GTUDDTYC[1:0] bits, 01b is set in the GTUDDTYC[1:0] bits (up-counting).
3	Select count clock	Select the count clock with the GTCR.TPCS[3:0] bits.
4	Set cycle	Set the cycle in the GTPR register.
5	Set initial value for counter	Set the initial value in the GTCNT counter. In Figure 20.3, 0x00000000 is set.
6	Start count operation	Set the GTCR.CST bit to 1 to start count operation.

(3) Periodic count operation in down-counting by count clock

The GTCNT counter in each channel can perform down-counting by setting GTUDDTYC.UD with GTUPSR and GTDNSR registers set to 0x00000000. When GTCNT changes from 0 to the GTPR value (underflow), GTST.TCFPU is set to 1, and the underflow interrupt(GPTn_UDF) is also generated. After the GTCNT counter underflows, down-counting resumes from the GTPR value.

Figure 20.4 shows an example of periodic count operation in down-counting by the count clock.

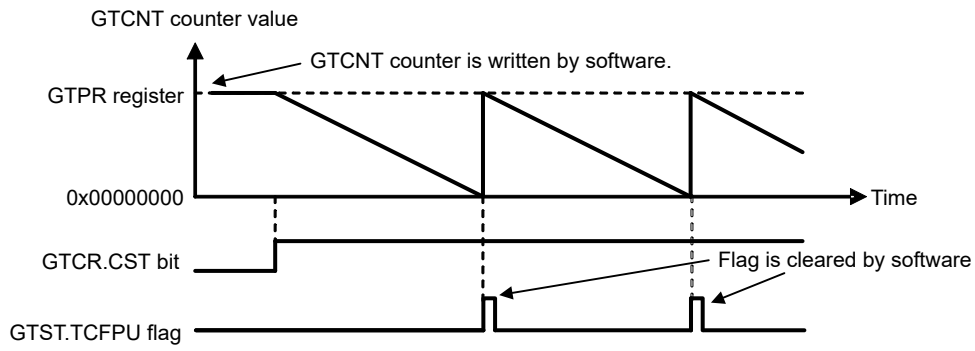

Figure 20.4 Example of periodic count operation in down-counting by the count clock

Table 20.6 shows an example for setting periodic count operation in down-counting by the count clock.

Table 20.6 Example for setting periodic count operation in down-counting by count clock

No.	Step Name	Description
1	Set operating mode	Set the operating mode with the GTCR.MD[2:0] bits. In Figure 20.4, 000b (saw-wave PWM mode) is set.
2	Set count direction	Select the count direction with the GTUDDTYC register. In Figure 20.4, after 10b is set in the GTUDDTYC[1:0] bits, 00b is set in the GTUDDTYC[1:0] bits (down-counting).
3	Select count clock	Select the count clock with the GTCR.TPCS[3:0] bits.
4	Set cycle	Set the cycle in the GTPR register.
5	Set initial value for counter	Set the initial value in the GTCNT counter. In Figure 20.4, the GTPR register value is set.
6	Start count operation	Set the GTCR.CST bit to 1 to start count operation. In Figure 20.4, 1 is set in the CST bit.

(4) Event count operation in up-counting using hardware sources

The GTCNT counter in each channel can perform up-counting using hardware sources as set in GTUPSR.

When GTUPSR is set to enable, the count clock selected in GTCR.TPCS[3:0] and the count direction selected in GTUDDTYC.UD are ignored. If up-counting and down-counting using hardware sources occur at the same time, the GTCNT counter value does not change. The overflow behavior when up-counting using hardware sources is the same as when up-counting by the count clock.

If you are using a hardware source to count up, set the GTCR.CST bit to 1 to enable the counting operation. After GTCR.CST is set to 1, the counter cannot count up for 1 clock cycle as specified in GTCR.TPCS[3:0] because the count operation is synchronized by the count clock selected in GTCR.TPCS[3:0]. Set GTCR.TPCS[3:0] to 000b to count up with a 1 PCLKD delay after GTCR.CST is set to 1.

Figure 20.5 shows an example of an event count operation in up-counting by a hardware resource (the rising edge of GTETRGA pin input).

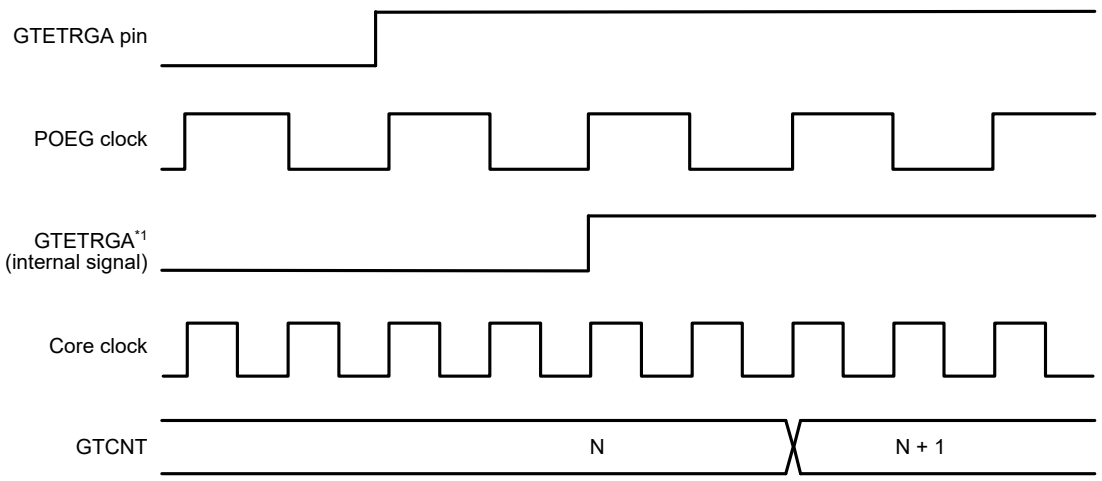

Note: POEG clock : PCLKB, Core clock : PCLKD
Note 1. The GTETRGA internal signal reflects the signal being input to the GPT when the digital noise filter for the GTETRGA pin in the POEG is not in use.

Figure 20.5 Example of event count operation in up-counting using hardware sources

Table 20.7 shows an example for setting event count operation in up-counting by a hardware source.

Table 20.7 Example for setting an event count operation in up-counting using hardware sources

No.	Step name	Description
1	Set count source	Select the counting-up hardware source with the GTUPSR register.
2	Set cycle	Set the cycle in the GTPR register.
3	Set initial value for counter	Set the initial value in the GTCNT counter.
4	Start count operation	Set the GTCR.CST bit to 1 to start count operation.

(5) Event count operation in down-counting using hardware sources

The GTCNT counter in each channel can perform down-counting using hardware sources set in the GTDNSR.

When GTDNSR is set to enable, the count clock selected in GTCR.TPCS[3:0] and the count direction selected in GTUDDTYC.UD are ignored. If up-counting and down-counting using hardware sources occur at the same time, the GTCNT counter value does not change. The underflow behavior when down-counting using hardware sources is the same as when down-counting by the count clock.

When GTCR.CST bit is set to 1 to count down using hardware sources, the count operation is enabled. After GTCR.CST is set to 1, the counter cannot count down for 1 clock cycle as specified in GTCR.TPCS[3:0] because the count operation is synchronized with the count clock selected in GTCR.TPCS[3:0]. Set GTCR.TPCS[3:0] to 000b to count down with a 1 PCLKD delay after GTCR.CST is set to 1.

Figure 20.6 shows an example of a event count operation in down-counting by a hardware resource (rising edge of GTETRGA pin).

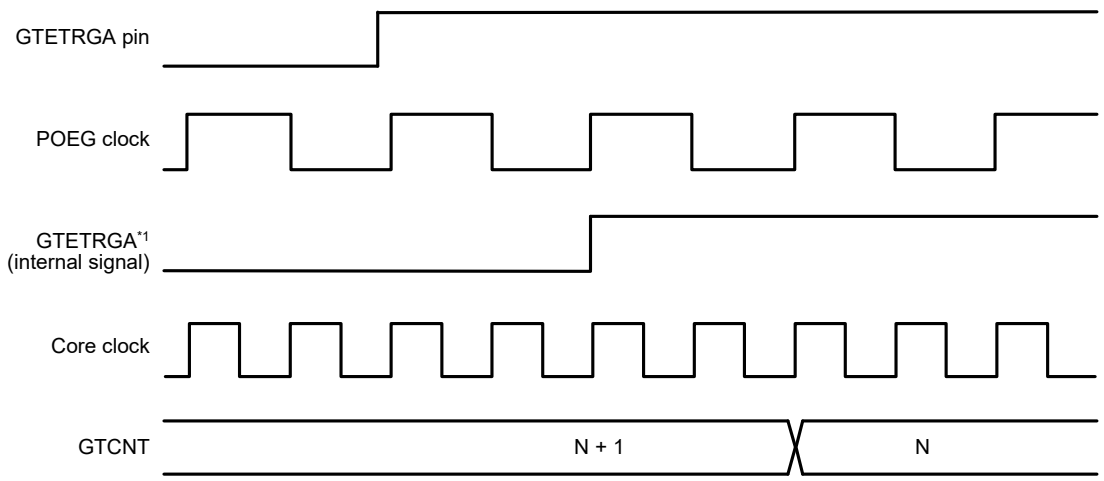

Note: POEG clock: PCLKB, Core clock: PCLKD
Note 1. The GTETRGA internal signal reflects the signal being input to the GPT when the digital noise filter for the GTETRGA pin in the POEG is not in use.

Figure 20.6 Example of event count operation in down-counting using hardware sources

Table 20.8 shows an example for setting a periodic count operation in down-counting using a hardware resource.

Table 20.8 Example for setting an event count operation in down-counting using hardware sources (1 of 2)

No.	Step name	Description
1	Set count source	Select the counting-down hardware source with the GTDNSR register.
2	Set cycle	Set the cycle in the GTPR register.

Table 20.8 Example for setting an event count operation in down-counting using hardware sources (2 of 2)

No.	Step name	Description
3	Set initial value for counter	Set the initial value in the GTCNT counter.
4	Start count operation	Set the GTCR.CST bit to 1 to start count operation.

(6) Counter clear operation

The counter of each channel is cleared by following sources:

- Writing 0 to GTCNT register
- Writing 1 to the bit in GTCLR associated with the GPT channel number when the GTCSR.CCLR bit set to 1
- The hardware source selected in GTCSR register.

Writing to the GTCNT register is prohibited during count operation. The GTCNT counter can be cleared both by writing 1 to the GTCLR and by the clear request of hardware sources, whether GTCNT is counting (GTCR.CST is 1) or not (GTCR.CST is 0).

When the count direction flag is set as decrement (GTST.TCUF flag = 0) in saw-wave mode selected with GTCR.MD[2:0] bits, the GTCNT register is set to the value of the GTPR register when writing 1 to the GTCLR register and when clearing by hardware sources are performed.

When not in saw-waves mode and down-counting, the GTCNT register is set to 0 when writing 1 to the GTCLR register and when clearing by hardware sources are performed.

In event count operation when at least 1 bit in the GTUPSR or GTDNSR is set to 1, after clear sources occur, both writing to GTCLR register and clearing by hardware sources are performed immediately to synchronize with PCLKD. If other settings are used, clear is synchronized with the counter clock selected in GTCR.TPCS[3:0].

20.3.1.2 Waveform output by compare match

Compare match means that the GTCNT counter value matches the value of GTCCRA or GTCCRB. When a compare match occurs, the compare match flag is generated synchronously with the count clock, including the event count. At the same time, the GPT can output low, high, or toggled output from the associated GTIOCnA or GTIOCnB output pin (n = 0 to 5). In addition, the GTIOCnA or GTIOCnB pin output can be low, high, or toggled at the cycle end which is determined by GTPR.

The cycle end is:

- For saw waves in up-counting – when GTCNT changes from the GTPR value to 0 (overflow)
- For saw waves in down-counting – when GTCNT changes from 0 to GTPR value (underflow)
- For saw waves – when the GTCNT counter is cleared
- For triangle waves – when the GTCNT changes from 0 to 1 (trough).

(1) Low output and high output

Figure 20.7 shows an example of low output and high output operation by a compare match of GTCCRA and GTCCRB.

In this example, the GTCNT counter performs up-counting, and settings are made so that high is output from the GTIOCnA pin by a GTCCRA compare match, and low is output from the GTIOCnB pin by a GTCCRB compare match. The pin level does not change when the specified level and pin level match.

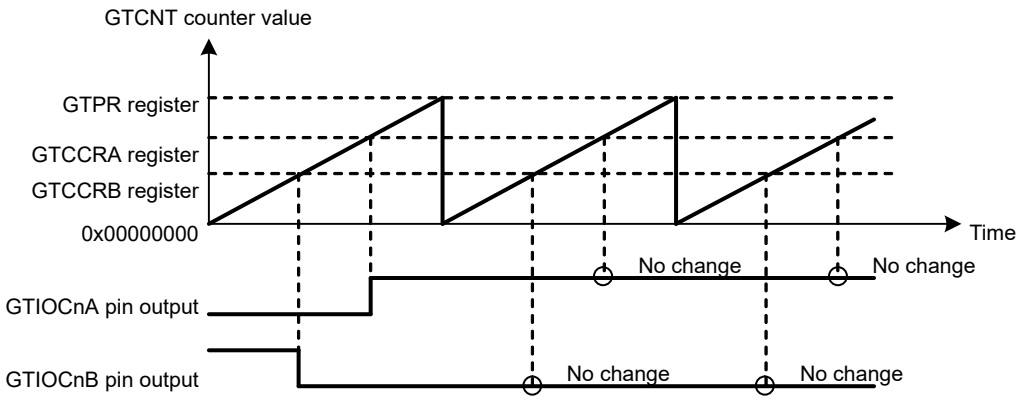

[Setting examples]
GTIOR.GTIOA[4:0] bits: Initial output is low, high output at compare match, output retained at cycle end
GTIOR.GTIOB[4:0] bits: Initial output is high, low output at compare match, output retained at cycle end

Note: The base address of registers are the same.

Figure 20.7 Example of low output and high output operation

Table 20.9 shows an example for setting low output and high output operation.

Table 20.9 Example for setting low output and high output operation

No.	Step Name	Description
1	Set operating mode	Set the operating mode with the GTCR.MD[2:0] bits. In Figure 20.7, 000b (saw-wave PWM mode) is set.
2	Set count direction	Select the count direction (up or down) with the GTUDDTYC register. In Figure 20.7, after 11b is set in the GTUDDTYC[1:0] bits, 01b is set in the GTUDDTYC[1:0] bits (up-counting).
3	Select count clock	Select the count clock with the GTCR.TPCS[3:0] bits.
4	Set cycle	Set the cycle in the GTPR register.
5	Set initial value for counter	Set the initial value in the GTCNT counter.
6	Set GTIOCnm pin function	Set the GTIOCnm pin function with the GTIOA[4:0] and GTIOB[4:0] bits in the GTIOR register. In Figure 20.7, GTIOA[4:0] = 00010b, GTIOB[4:0] = 10001b.
7	Enable GTIOCnm pin output	Set to enable the GTIOCnm pin output with the OAE and OBE bits in the GTIOR register.
8	Set compare match value	Set compare match values in the GTCCRA and GTCCRB registers.
9	Start count operation	Set the GTCR.CST bit to 1 to start count operation.

Note: n: 0 to 5
m: A, B

(2) Toggled output

Figure 20.8 and Figure 20.9 show examples of toggled output operation by compare matches of GTCCRA and GTCCRB.

In Figure 20.8, the GTCNT counter performs up-counting, and settings are made so that the GTIOCnA pin output by a GTCCRA compare match and GTIOCnB pin output by a GTCCRB compare match are toggled.

In Figure 20.9, the GTCNT counter performs up-counting, and settings are made so that a GTCCRA compare match toggles the GTIOCnA pin output level and a cycle end toggles the GTIOCnB pin output level.

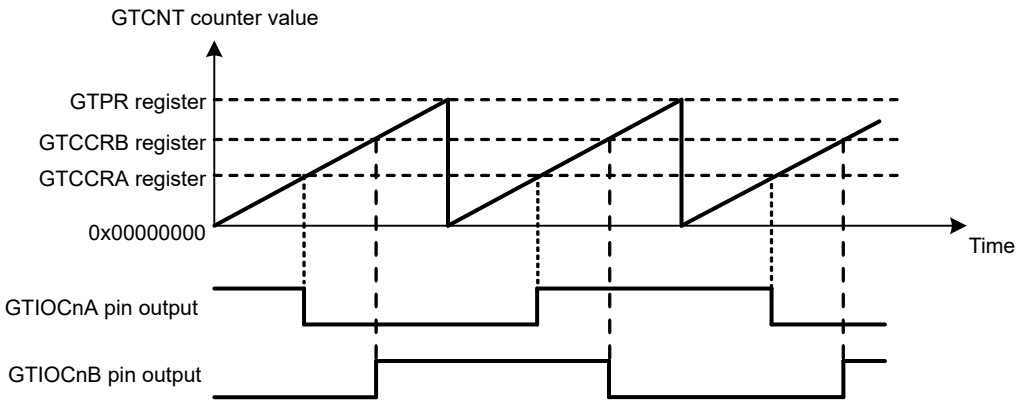

[Setting examples]
GTIOR.GTIOA[4:0] bits: Initial output is high, output toggled at compare match, output retained at cycle end
GTIOR.GTIOB[4:0] bits: Initial output is low, output toggled at compare match, output retained at cycle end

Note: The base address of registers are the same.

Figure 20.8 Example of toggled output operation (1)

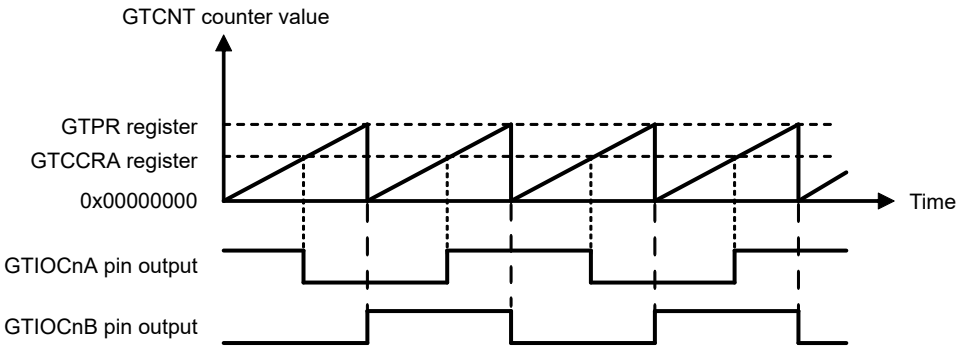

[Setting examples]
GTIOR.GTIOA[4:0] bits: Initial output is high, output toggled at compare match, output retained at cycle end
GTIOR.GTIOB[4:0] bits: Initial output is low, output retained at compare match, output toggled at cycle end

Note: The base address of registers are the same.

Figure 20.9 Example of toggled output operation (2)

Table 20.10 shows an example for setting toggled output operation.

Table 20.10 Example for setting toggled output operation (1 of 2)

No.	Step Name	Description
1	Set operating mode	Set the operating mode with the GTCR.MD[2:0] bits. In Figure 20.8 and Figure 20.9, 000b (saw-wave PWM mode) is set.
2	Set count direction	Select the count direction (up or down) with the GTUDDTYC register. In Figure 20.8 and Figure 20.9, after 11b is set in the GTUDDTYC[1:0] bits, 01b is set in the GTUDDTYC[1:0] bits (up-counting).
3	Select count clock	Select the count clock with the GTCR.TPCS[3:0] bits.
4	Set cycle	Set the cycle in the GTPR register.
5	Set initial value for counter	Set the initial value in the GTCNT counter.

Table 20.10 Example for setting toggled output operation (2 of 2)

No.	Step Name	Description
6	Set GTIOCnm pin function	Set the GTIOCnm pin function with the GTIOA[4:0] and GTIOB[4:0] bits in the GTIOR register. In Figure 20.8, GTIOA[4:0] = 10011b, GTIOB[4:0] = 00011b, and in Figure 20.9, GTIOA[4:0] = 10011b, GTIOB[4:0] = 01100b.
7	Enable GTIOCnm pin output	Set to enable the GTIOCnm pin output with the OAE and OBE bits in the GTIOR register.
8	Set compare match value	Set compare match values in the GTCCRA and GTCCRB registers.
9	Start count operation	Set the GTCR.CST bit to 1 to start count operation.

Note: n: 0 to 5
m: A, B

20.3.1.3 Input Capture Function

The GTCNT counter value can be transferred to either GTCCRA or GTCCRB on detection of the hardware source that is set in GTICASR and GTICBSR.

Figure 20.10 shows an example of the input capture function.

In this example, the GTCNT counter performs up-counting by the count clock, and settings are made so that an input capture is performed to GTCCRA at both edges of the GTIOCnA input pin and to GTCCRB on the rising edge of the GTIOCnB input pin.

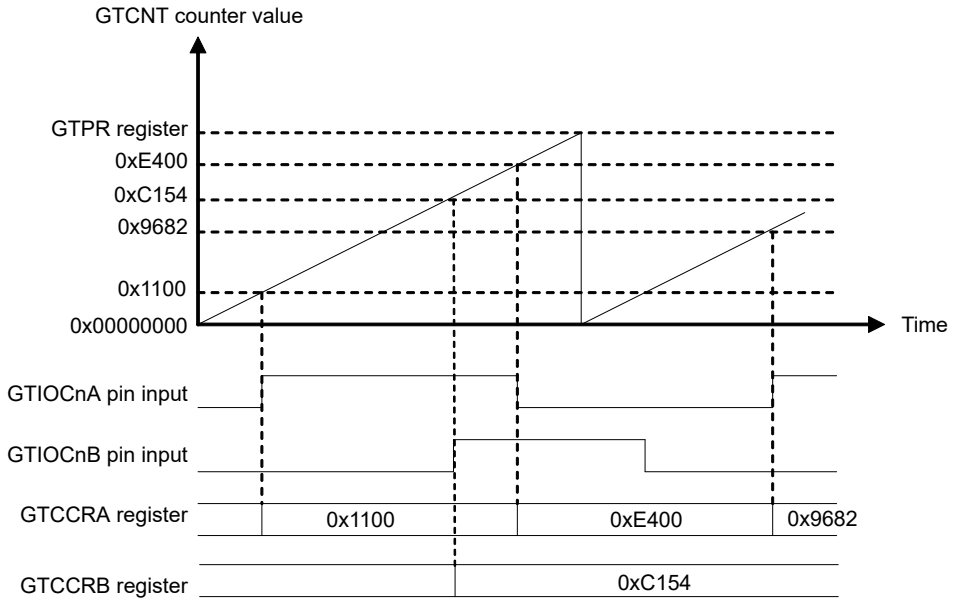

Note: The base address of registers are the same.
Note: [Setting examples]
GTICASR setting: input capture at both edges
GTICBSR setting: input capture at the rising edge

Figure 20.10 Example of input capture operation

Table 20.11 and Table 20.14 show the example for setting an input capture operation with count operation by the count clock.

Table 20.11 Example for setting input capture operation (1 of 2)

No.	Step name	Description
1	Set operating mode	Set the operating mode with the GTCR.MD[2:0] bits. In Figure 20.10, 000b (saw-wave PWM mode) is set.

Table 20.11 Example for setting input capture operation (2 of 2)

No.	Step name	Description
2	Set count direction	Select the count direction (up or down) with the GTUDDTYC register. In Figure 20.10, after 11b is set in the GTUDDTYC[1:0] bits, 01b is set in the GTUDDTYC[1:0] bits (up-counting).
3	Select count clock	Select the count clock with the GTCR.TPCS[3:0] bits.
4	Set cycle	Set the cycle in the GTPR register.
5	Set initial value for counter	Set the initial value in the GTCNT counter.
6	Select input capture source	Select the input capture source in the GTICASR and GTICBSR registers. In Figure 20.10, GTICASR = 0x00000F00, GTICBSR = 0x00003000.
7	Start count operation	Set the GTCR.CST bit to 1 to start count operation.

20.3.2 Buffer Operation

The following buffer operations can be set with GTBER:

- GTPR and GTPBR
- GTCCRA, GTCCRC, and GTCCRD
- GTCCRB, GTCCRE, and GTCCRF

20.3.2.1 GTPR Register Buffer Operation

GTPBR can function as a buffer register for GTPR.

The buffer transfer is performed at an overflow (during up-counting) or an underflow (during down-counting) in saw-wave mode or in event count, and at a trough in triangle-wave mode.

In saw-wave mode or in event count, the buffer transfer is performed when the following counter clear operations occur during counting:

- Clear by hardware sources (the clear source is selected in GTCSR register)
- Clear by software (when GTCSR.CCLR bit is 1 and GTCLR.CCLRn bit is set to 1, n = 0 to 5).

To set GTPR to function as a buffer, set the GTBER.PR bit to 1. To set GTPR not to function as a buffer, set the GTBER.PR bit to 0.

Figure 20.11 to Figure 20.13 show examples of GTPR buffer operation and Table 20.12 shows an example for setting GTPR buffer operation.

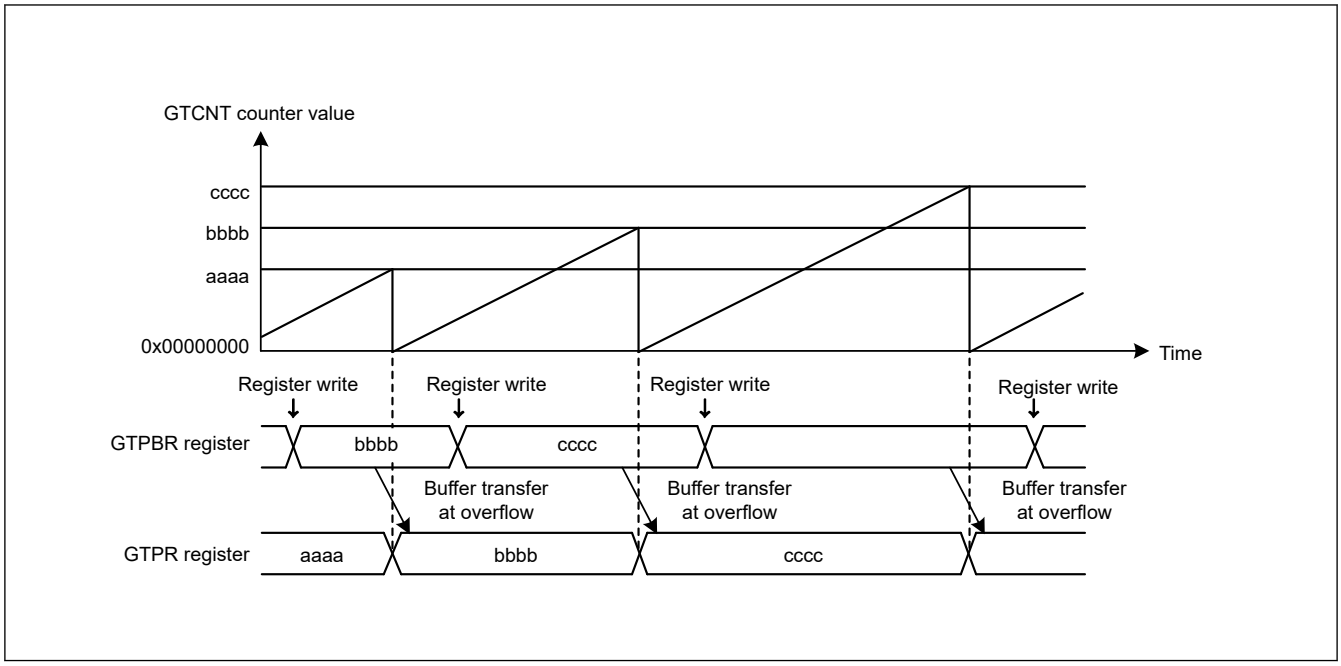

Figure 20.11 Example of GTPR buffer operation with saw waves in up-counting

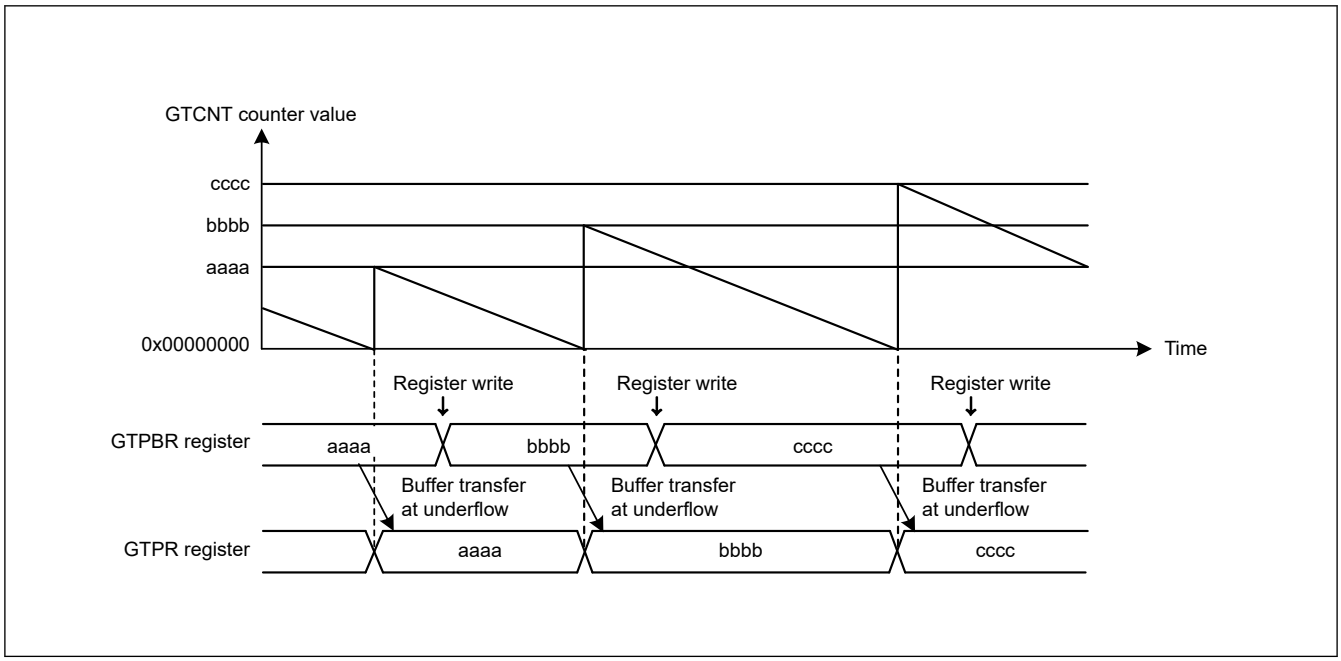

Figure 20.12 Example of GTPR buffer operation with saw waves in down-counting

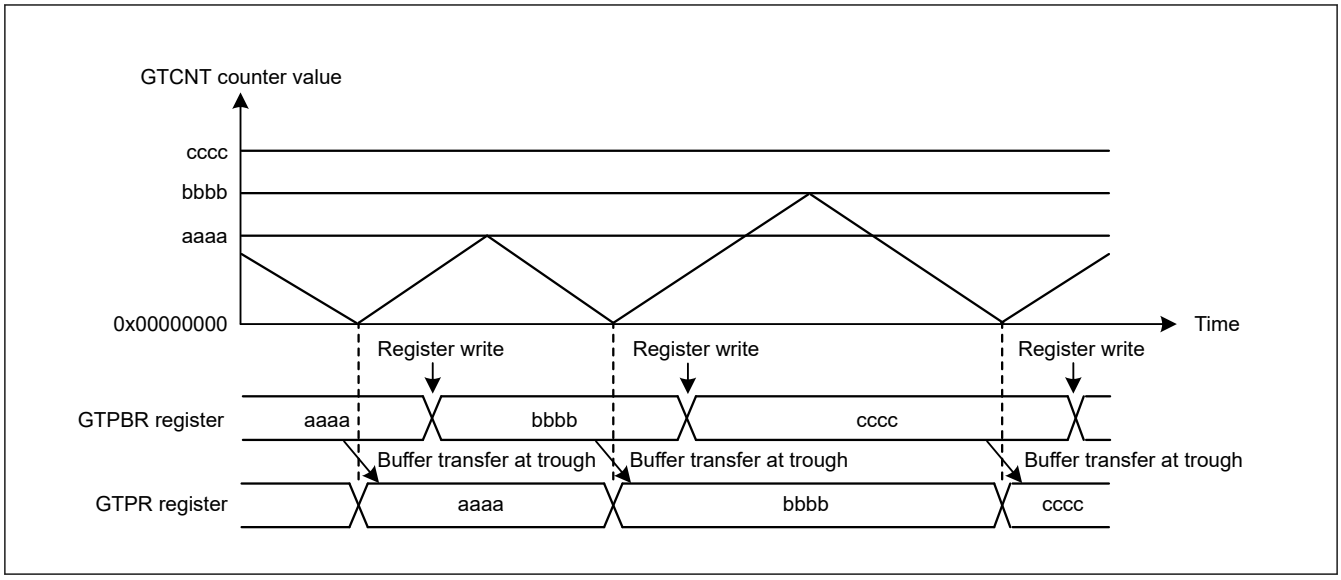

Figure 20.13 Example of GTPR buffer operation with triangle waves

Table 20.12 Example for setting GTPR register buffer operation

No.	Step Name	Description
1	Set operating mode	Set the operating mode with the GTCR.MD[2:0] bits. In Figure 20.11 and Figure 20.12, 000b (saw-wave PWM mode) is set, and in Figure 20.13, 100b (triangle-wave PWM mode 1) is set.
2	Set count direction	Select the count direction (up or down) with the GTUDDTYC register. In Figure 20.11, after 11b is set in the GTUDDTYC[1:0] bits, 01b is set in the GTUDDTYC[1:0] bits (up-counting). In Figure 20.12, after 10b is set in the GTUDDTYC[1:0] bits, 00b is set in the GTUDDTYC[1:0] bits (down-counting).
3	Select count clock	Select the count clock with the GTCR.TPCS[3:0] bits.
4	Set cycle	Set the cycle in the GTPR register.
5	Set initial value for counter	Set the initial value in the GTCNT counter.
6	Set buffer operation	Set buffer operation with the GTBER.PR[1:0] bits. In Figure 20.11, Figure 20.12, and Figure 20.13, PR[1:0] = 01b.
7	Set buffer value	For buffer operation, set a value in one cycle after the current cycle in the GTPBR register.
8	Start count operation	Set the GTCR.CST bit to 1 to start count operation.
9	Set buffer value for each cycle	For buffer operation, set a value in one cycle after the current cycle in the GTPBR register.

20.3.2.2 Buffer Operation for GTCCRA and GTCCRB Registers

GTCCRC can function as the GTCCRA buffer register and GTCCRD can function as the GTCCRC buffer register (double-buffer register for GTCCRA). Similarly, GTCCRE can function as the GTCCRB buffer register and GTCCRF can function as the GTCCRE buffer register (double-buffer register for GTCCRB).

To set GTCCRA or GTCCRB to function as a double buffer, set GTBER.CCRA[1:0] or GTBER.CCRB[1:0] to 10b or 11b. For single buffer operation, set 01b. To set GTCCRA or GTCCRB to not function as a buffer, set 00b.

In saw-wave one-shot pulse mode, triangle-wave PWM mode 3, the buffer operations that specify each PWM output operation mode are performed regardless of the setting of GTBER.CCRA [1:0] bits and GTBER.CCRB [1:0] bits.

(1) When GTCCRA or GTCCRB Functions as Output Compare Register

In saw-wave one-shot pulse mode, triangle-wave PWM mode 3, the buffer operations that specify each PWM output operation mode are performed regardless of the setting of GTBER.CCRA [1:0] bits and GTBER.CCRB [1:0] bits. For details, see section 1.3.3. PWM Output Operating Mode. Other than the above PWM output operation mode, buffer transfer occurs in the following situations:

- Buffer transfer by overflow or underflow

Buffer transfer is performed at an overflow (during up-counting) or an underflow (during down-counting) in saw-wave mode or in event count operation. In triangle-wave mode, buffer transfer is performed at a trough (triangle-wave PWM mode 1) or a crest and trough (triangle-wave PWM mode 2).

- Buffer transfer by counter clear
  In saw-wave mode or in event count operation, during counting, buffer transfer (which is the same as an overflow during up-counting or an underflow during down-counting) is performed by the counter clear sources similar to the case shown in section 20.3.2.1. GTPR Register Buffer Operation.
  In triangle-wave mode, buffer transfer is not performed by the counter clear.
- Forcible buffer transfer
  When GTBER.CCRSWT bit is set to 1 while the count operation is stopped, the GTCCRA and the GTCCRB register buffer transfer are performed forcibly in saw-wave mode, in event count operation and in triangle-wave mode. Additionally buffer transfer from the GTCCRD register to temporary register A and from the GTCCRF register to temporary register B are performed in saw-wave one-shot pulse mode or triangle-wave PWM mode 3.

Figure 20.14 to Figure 20.16 show examples of GTCCRA and GTCCRB buffer operation and Table 20.13 shows an example for setting GTCCRA and GTCCRB buffer operation.

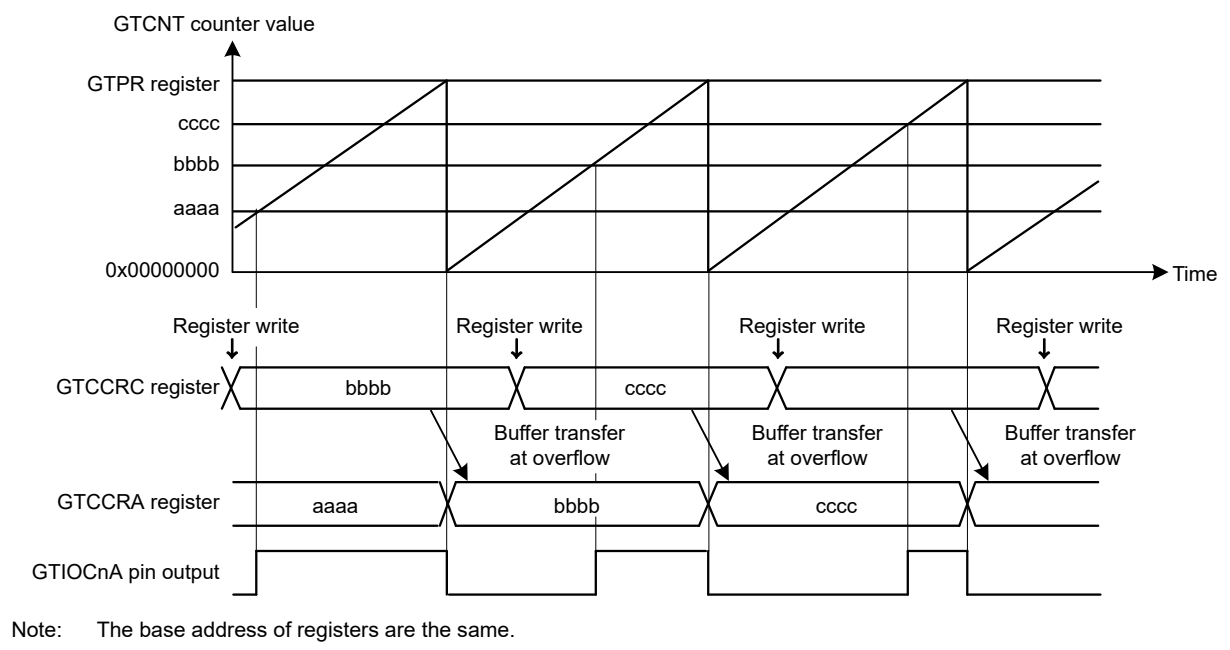

Note: The base address of registers are the same.

Figure 20.14 Example of GTCCRA and GTCCRB buffer operation with output compare, saw waves in up-counting, high output at GTCCRA compare match, and low output at cycle end

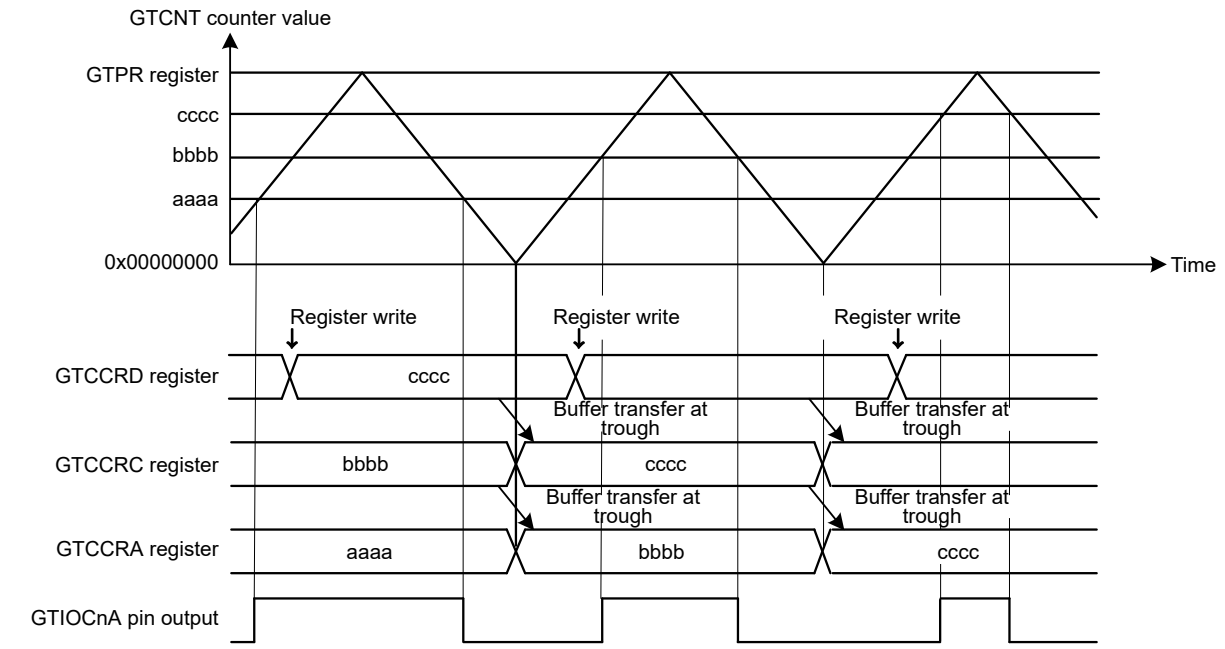

Note: The base address of registers are the same.

Figure 20.15 Example of GTCCRA and GTCCRB double buffer operation with output compare, triangle waves, buffer operation at trough, output toggled at GTCCRA compare match, and output retained at cycle end

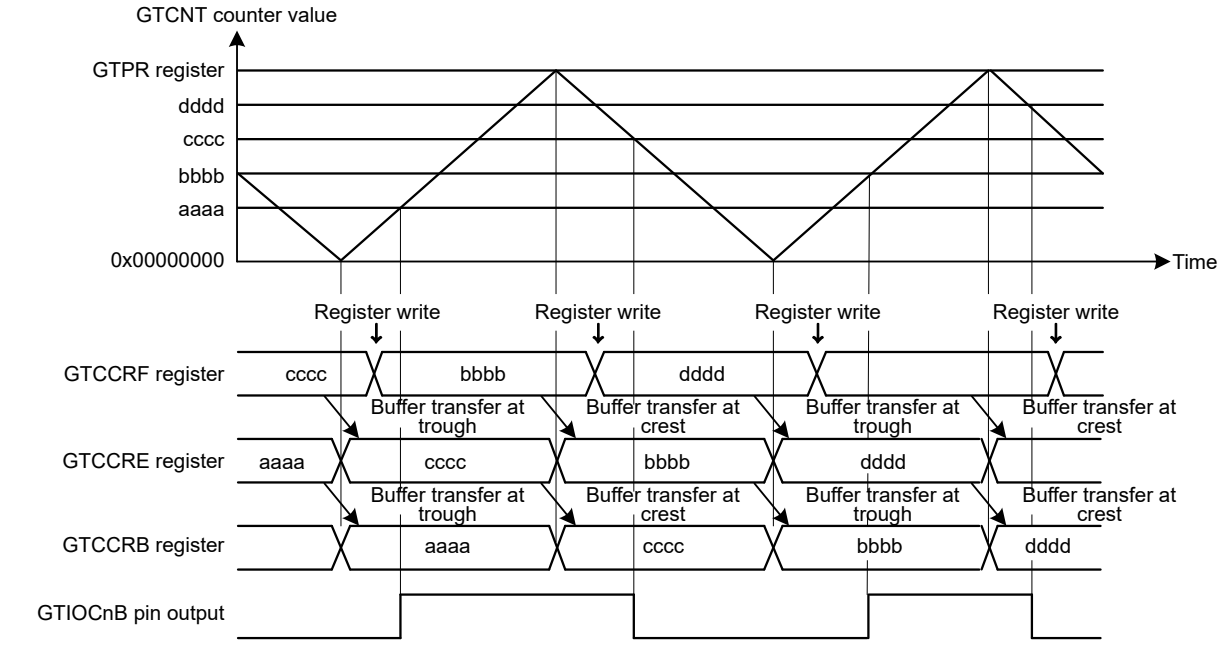

Note: The base address of registers are the same.

Figure 20.16 Example of GTCCRA and GTCCRB double buffer operation with output compare, triangle waves, buffer operation at both troughs and crests, output toggled at GTCCRB compare match, and output retained at cycle end

Table 20.13 Example for setting GTCCRA and GTCCRB buffer operation for output compare

No.	Step name	Description
1	Set operating mode	Set the operating mode with the GTCR.MD[2:0] bits. In Figure 20.14, 000b (saw-wave PWM mode) is set, in Figure 20.15, 100b (triangle-wave PWM mode 1) is set, and in Figure 20.16, 101b (triangle-wave PWM mode 2) is set.
2	Set count direction	Select the count direction (up or down) with the GTUDDTYC register. In Figure 20.14, after 11b is set in the GTUDDTYC[1:0] bits, 01b is set in the GTUDDTYC[1:0] bits (up-counting).
3	Select count clock	Select the count clock with the GTCR.TPCS[3:0] bits.
4	Set cycle	Set the cycle in the GTPR register.
5	Set initial value for counter	Set the initial value in the GTCNT counter.
6	Set GTIOCnm pin function	Set the GTIOCnm pin function with the GTIOA[4:0] and GTIOB[4:0] bits in the GTIOR register. In Figure 20.14, GTIOA[4:0] = 00110b, in Figure 20.15, GTIOA[4:0] = 00011b, and in Figure 20.16, GTIOB[4:0] = 00011b.
7	Enable GTIOCnm pin output	Set to enable the GTIOCnm pin output with the OAE and OBE bits in the GTIOR register.
8	Set buffer operation	Set buffer operation with the CCRA[1:0] and CCRB[1:0] bits in the GTBER register. In Figure 20.14, CCRA[1:0] = 01b, in Figure 20.15, CCRA[1:0] = 1xb, and in Figure 20.16, CCRB[1:0] = 1xb.
9	Set compare match value	Set the GTIOCnA pin transition in the GTCCRA register and the GTIOCnB pin transition in the GTCCRB register.
10	Set buffer value	For buffer operation, set the GTIOCnA and GTIOCnB pins transitions in 1 cycle after the current cycle (in saw-wave mode or triangle-wave mode with buffer transfer at trough or crest) or half cycle after the current cycle (in triangle-wave mode with buffer transfer at both trough and crest) in the GTCCRC and GTCCRE registers, respectively. For double buffer operation, also set the GTIOCnA and GTIOCnB pins transitions in 2 cycles after the current cycle (in saw-wave mode or triangle-wave mode with buffer transfer at trough or crest) or 1 cycle after the current cycle (in triangle-wave mode with buffer transfer at both trough and crest) in the GTCCRD and GTCCRF registers, respectively.
11	Start count operation	Set the GTCR.CST bit to 1 to start count operation.
12	Set buffer value for each cycle	For buffer operation, set the GTIOCnA and GTIOCnB pins transitions in 1 cycle after the current cycle (in saw-wave mode or triangle-wave mode with buffer transfer at trough or crest) or half cycle after the current cycle (in triangle-wave mode with buffer transfer at both trough and crest) in the GTCCRC and GTCCRE registers, respectively. For double buffer operation, also set the GTIOCnA and GTIOCnB pins transitions in 2 cycles after the current cycle (in saw-wave mode or triangle-wave mode with buffer transfer at trough or crest) or 1 cycle after the current cycle (in triangle-wave mode with buffer transfer at both trough and crest) in the GTCCRD and GTCCRF registers, respectively.

Note: n: 0 to 5
m: A, B

(2) When GTCCRA or GTCCRB Functions as Input Capture Register

When an input capture is generated, the GTCNT counter value is transferred to GTCCRA and GTCCRB and the stored GTCCRA and GTCCRB register values are transferred to the buffer registers. In input capture operation, the buffer transfer is not performed by the counter clear.

Figure 20.17 and Figure 20.18 show examples of GTCCRA and GTCCRB buffer operation and Table 20.14 shows an example for setting GTCCRA and GTCCRB buffer operation.

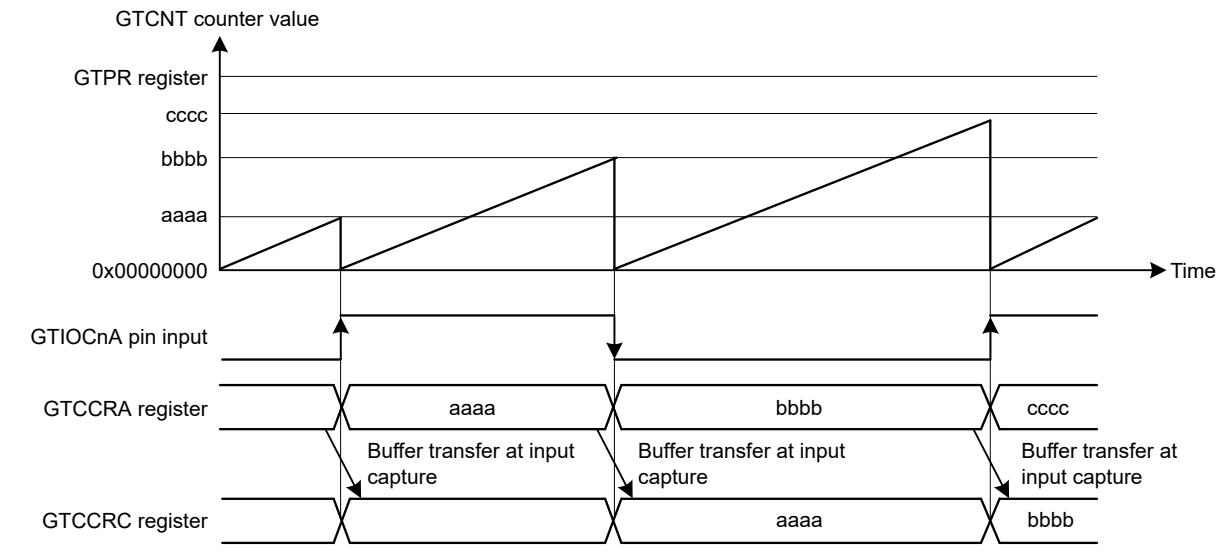

Note: The base address of registers are the same.

Figure 20.17 Example of GTCCRA and GTCCRB buffer operation with input capture at both edges of GTIOCnA input, saw waves in up-counting, and GTCNT counter cleared at both edges of GTIOCnA input

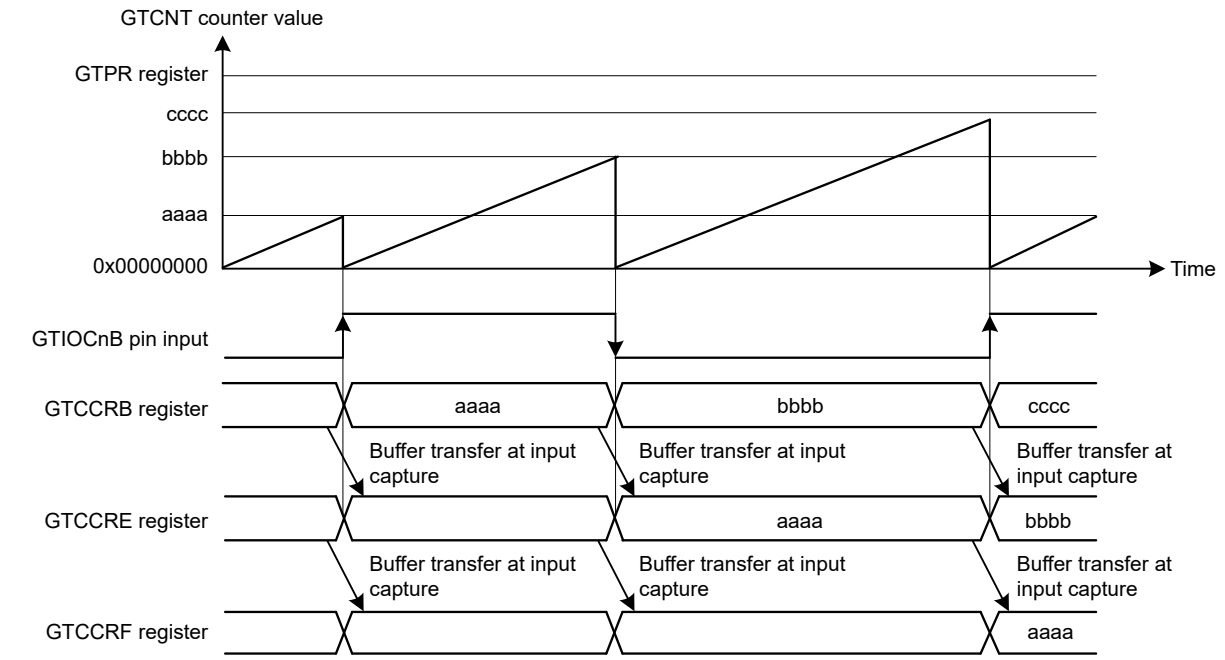

Note: The base address of registers are the same.

Figure 20.18 Example of GTCCRA and GTCCRB double buffer operation with input capture at both edges of GTIOCnB input, saw waves in up-counting, and GTCNT counter cleared at both edges of GTIOCnB input

Table 20.14 Example for setting GTCCRA and GTCCRB buffer operation for input capture

No.	Step name	Description
1	Set operating mode and counter clear sources	Set the operating mode with the GTCR.MD[2:0] bits and count clear source with the GTCSR register. In Figure 20.17, MD[2:0] = 000b (saw-wave PWM mode) and GTCSR = 0x00000F00, and in Figure 20.18, MD[2:0] = 000b (saw-wave PWM mode) and GTCSR = 0x0000F000.
2	Set count direction	Select the count direction (up or down) with the GTUDDTYC register. In Figure 20.17, after 11b is set in the GTUDDTYC[1:0] bits, 01b is set in the GTUDDTYC[1:0] bits (up-counting).
3	Select count clock	Select the count clock with the GTCR.TPCS[3:0] bits.
4	Set cycle	Set the cycle in the GTPR register.
5	Set initial value for counter	Set the initial value in the GTCNT counter.
6	Select input capture source	Select input capture source in the GTICASR register and GTICBSR register. In Figure 20.17, GTICASR = 0x00000F00, and in Figure 20.18, GTICBSR = 0x0000F000.
7	Set buffer operation	Set buffer operation with the CCRA and CCRB bits in the GTBER register. In Figure 20.17, CCRA[1:0] = 01b, and in Figure 20.18, CCRB[1:0] = 1xb.
8	Start count operation	Set the GTCR.CST bit to 1 to start count operation.

20.3.3 PWM Output Operating Mode

The GPT can output PWM waveforms to the GTIOCnA or GTIOCnB pin (n = 0 to 5) by a compare match between the GTCNT counter and GTCCRA or GTCCRB.

By setting GTDTCR and GTDVU, the compare match value for a negative-phase waveform with dead time can automatically be set to GTCCRB.

20.3.3.1 Saw-Wave PWM Mode

In saw-wave PWM mode, GTCNT performs saw-wave (half-wave) operation by setting the cycle in GTPR and a PWM waveform is output to the GTIOCnA or GTIOCnB pin (n = 0 to 5) when a GTCCRA or GTCCRB compare match occurs. The pin output value can be selected from low output, high output, or toggle output separately for a compare match and for the cycle end according to the GTIOR setting.

Figure 20.19 shows an example of saw-wave PWM mode operation, and Table 20.15 shows an example for setting saw-wave PWM mode.

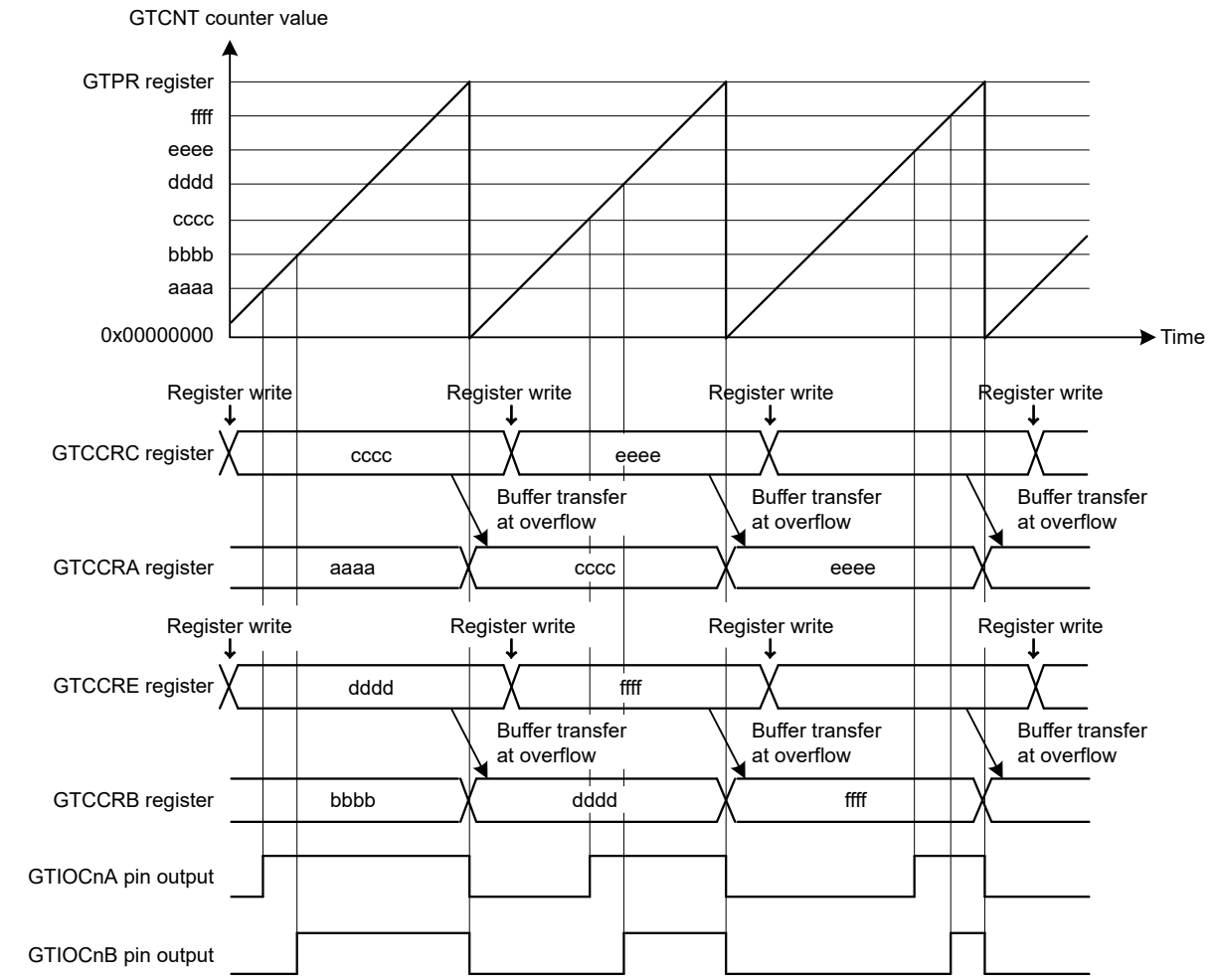

Note: The base address of registers are the same.

Figure 20.19 Example of saw-wave PWM mode operation with up-counting, buffer operation, high output at GTCCRA/GTCCRB compare match, and low output at cycle end

Table 20.15 Example for setting saw-wave PWM mode (1 of 2)

No.	Step name	Description
1	Set operating mode	Set the operating mode with the GTCR.MD[2:0] bits. In Figure 20.19, 000b (saw-wave PWM mode) is set.
2	Set count direction	Select the count direction (up or down) with the GTUDDTYC register. In Figure 20.19, after 11b is set in the GTUDDTYC[1:0] bits, 01b is set in the GTUDDTYC[1:0] bits (up-counting).
3	Select count clock	Select the count clock with the GTCR.TPCS[3:0] bits.
4	Set cycle	Set the cycle in the GTPR register.
5	Set initial value for counter	Set the initial value in the GTCNT counter.
6	Set GTIOCnm pin function	Set the GTIOCnm pin function with the GTIOA[4:0] and GTIOB[4:0] bits in the GTIOR register. In Figure 20.19, GTIOA[4:0] = 00110b and GTIOB[4:0] = 00110b.
7	Enable GTIOCnm pin output	Set to enable the GTIOCnm pin output with the OAE and OBE bits in the GTIOR register.
8	Set buffer operation	Set buffer operation with the CCRA[1:0] and CCRB[1:0] bits in the GTBER register. In Figure 20.19, CCRA[1:0] = 01b and CCRB[1:0] = 01b.
9	Set compare match value	Set the GTIOCnA pin transition in the GTCCRA register and the GTIOCnB pin transition in the GTCCRB register.

Table 20.15 Example for setting saw-wave PWM mode (2 of 2)

No.	Step name	Description
10	Set buffer value	For buffer operation, set the GTIOCnA and GTIOCnB pins transitions in 1 cycle after the current cycle in the GTCCRC and GTCCRE registers, respectively. For double buffer operation, also set the GTIOCnA and GTIOCnB pins transitions in 2 cycles after the current cycle in the GTCCRD and GTCCRF registers, respectively.
11	Start count operation	Set the GTCR.CST bit to 1 to start count operation.
12	Set buffer value for each cycle	For buffer operation, set the GTIOCnA and GTIOCnB pins transitions in 1 cycle after the current cycle in the GTCCRC and GTCCRE registers, respectively. For double buffer operation, also set the GTIOCnA and GTIOCnB pins transitions in 2 cycles after the current cycle in the GTCCRD and GTCCRF registers, respectively.

Note: n: 0 to 5
m: A, B

20.3.3.2 Saw-Wave One-Shot Pulse Mode

The saw-wave one-shot pulse mode is a mode in which the cycle is set in GTPR, the GTCNT counter performs saw-wave (half-wave) operation and a PWM waveform is output to the GTIOCnA or GTIOCnB pin (n = 0 to 5) at a compare match of GTCCRA or GTCCRB with buffer operation fixed.

Buffer operation in saw-wave one-shot pulse mode is different from the usual buffer operation. Buffer transfer is performed from:

- GTCCRC to GTCCRA at the cycle end
- GTCCRE to GTCCRB at the cycle end
- GTCCRD to temporary register A at the cycle end
- GTCCRF to temporary register B at the cycle end
- Temporary register A to GTCCRA at a GTCCRA compare match
- Temporary register B to GTCCRB at a GTCCRB compare match.

The pin output value can be selected from low output, high output, or toggled output separately for a compare match and the cycle end according to the GTIOR setting. When the GTBER.CCRSWT bit is set to 1 while count operation is stopped, the buffer is transferred forcibly from the GTCCRD register to temporary register A and from the GTCCRF register to temporary register B. By setting GTDTCR, GTDVU, a compare match value for a negative-phase waveform with dead time can automatically be set to GTCCRB.

Figure 20.20 shows an example of saw-wave one-shot pulse mode operation, and Table 20.16 shows an example for setting saw-wave one-shot pulse mode.

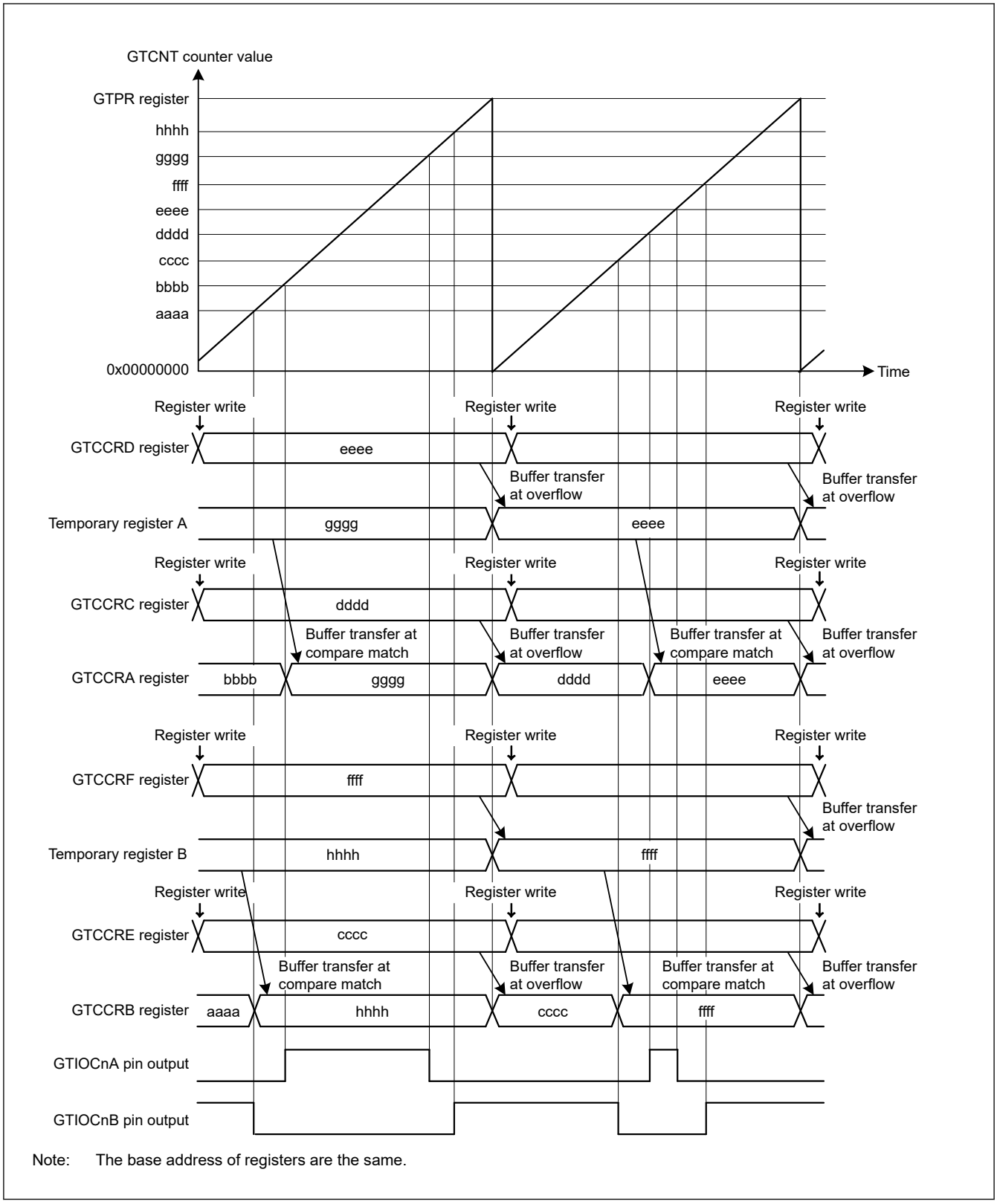

Note: The base address of registers are the same.

Figure 20.20 Example of saw-wave one-shot pulse mode operation with up-counting, low output from the GTIOCnA pin and high output from the GTIOCnB pin at count start, output toggled at GTCCRA/ GTCCRB compare match, and output retained at cycle end

Table 20.16 Example setting for saw-wave one-shot pulse mode

No.	Step name	Description
1	Set operating mode	Set the operating mode with the GTCR.MD[2:0] bits. In Figure 20.20, 001b (saw-wave one-shot pulse mode) is set.
2	Set count direction	Select the count direction (up or down) with the GTUDDTYC register. In Figure 20.20, after 11b is set in the GTUDDTYC[1:0] bits, 01b is set in the GTUDDTYC[1:0] bits (up-counting).
3	Select count clock	Select the count clock with the GTCR.TPCS[3:0] bits.
4	Set cycle	Set the cycle in the GTPR register.
5	Set initial value for counter	Set the initial value in the GTCNT counter.
6	Set GTIOCnm pin function	Set the GTIOCnm pin function with the GTIOA[4:0] and GTIOB[4:0] bits in the GTIOR register. In Figure 20.20, GTIOA[4:0] = 00011b and GTIOB[4:0] = 10011b.
7	Enable GTIOCnm pin output	Set to enable the GTIOCnm pin output with the OAE and OBE bits in the GTIOR register.
8	Set compare match value	Set the GTIOCnA pin transition immediately after the count start in the GTCCRC and GTCCRD registers and the GTIOCnB pin transition in the GTCCRE and GTCCRF registers.
9	Set forcible buffer transfer	Set the GTBER.CCRSWT bit to 1 to transfer buffer register data forcibly.
10	Set buffer value	For buffer operation, set the GTIOCnA pin transition in one cycle after the current cycle in the GTCCRC and GTCCRD registers and the GTIOCnB pin transition in the GTCCRE and GTCCRF registers.
11	Start count operation	Set the GTCR.CST bit to 1 to start count operation.
12	Set buffer value for each cycle	For buffer operation, set the GTIOCnA pin transition in one cycle after the current cycle in the GTCCRC and GTCCRD registers and the GTIOCnB pin transition in the GTCCRE and GTCCRF registers.

Note: n: 0 to 5
m: A, B

20.3.3.3 Triangle-Wave PWM Mode 1 (32-Bit Transfer at Trough)

The triangle-wave PWM mode 1 is a mode in which the cycle is set in GTPR. The GTCNT counter performs triangle-wave (full-wave) operation, and a PWM waveform is output to the GTIOCnA or GTIOCnB pin (n = 0 to 5) when a GTCCRA or GTCCRB compare match occurs. Buffer transfer is performed at the trough. The pin output value can be selected from low output, high output, or toggled output separately for a compare match and for the cycle end according to the GTIOR setting.

By setting GTDTCR, GTDVU, a compare match value for a negative-phase waveform with dead time can automatically be set to GTCCRB.

Figure 20.21 shows an example of a triangle-wave PWM mode 1 operation, and Table 20.17 shows an example for setting a triangle-wave PWM mode 1.

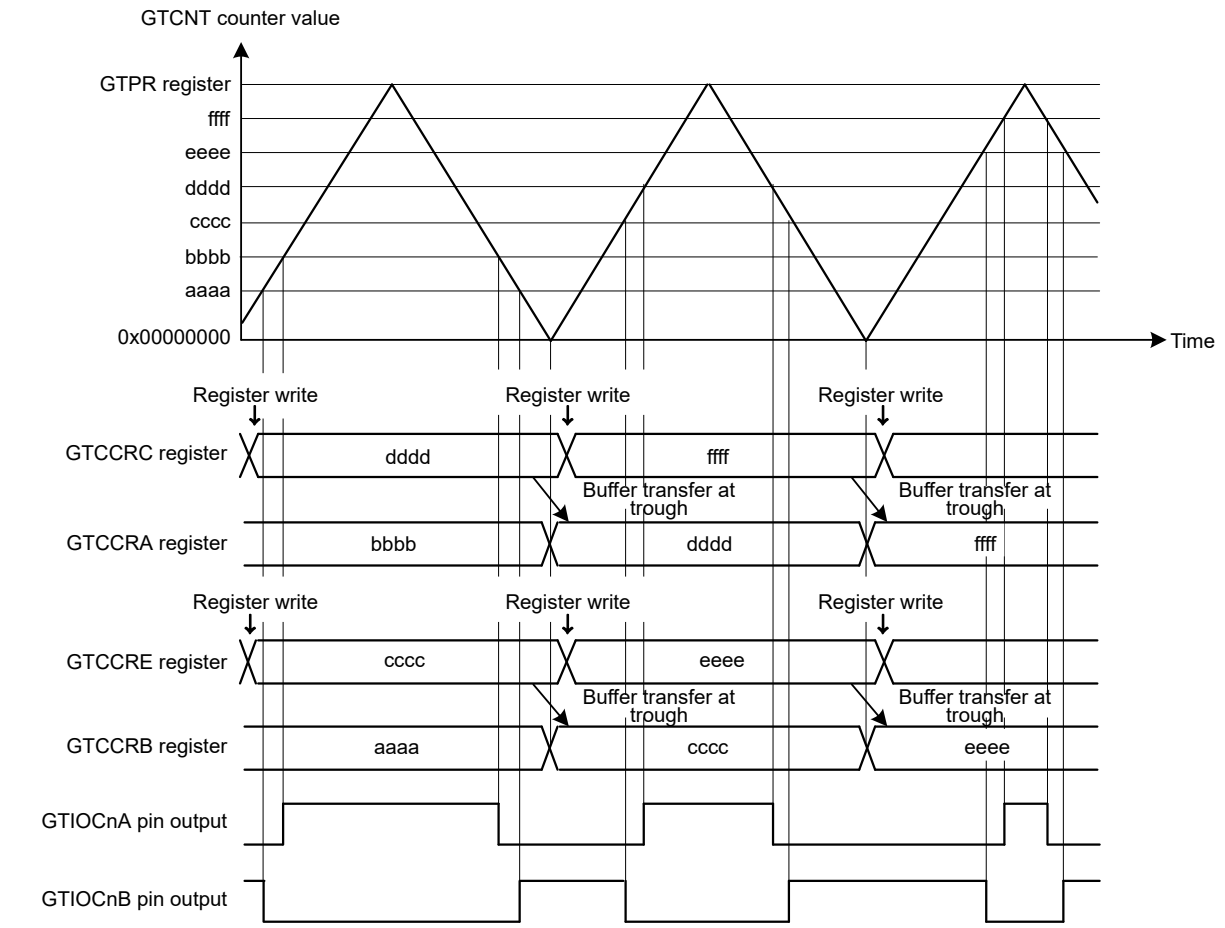

Note: The base address of registers are the same.

Figure 20.21 Example of triangle-wave PWM mode 1 operation with buffer operation, low output from the GTIOCnA pin and high output from the GTIOCnB pin at count start, output toggled at GTCCRA/ GTCCRB register compare match, and output retained at cycle end

Table 20.17 Example setting for triangle-wave PWM mode 1 (1 of 2)

No.	Step name	Description
1	Set operating mode	Set the operating mode with the GTCR.MD[2:0] bits. In Figure 20.21, 100b (triangle-wave PWM mode 1) is set.
2	Select count clock	Select the count clock with the GTCR.TPCS[3:0] bits.
3	Set cycle	Set the cycle in the GTPR register.
4	Set initial value for counter	Set the initial value in the GTCNT counter.
5	Set GTIOCnm pin function	Set the GTIOCnm pin function with the GTIOA[4:0] and GTIOB[4:0] bits in the GTIOR register. In Figure 20.21, GTIOA[4:0] = 00011b and GTIOB[4:0] = 10011b.
6	Enable GTIOCnm pin output	Set to enable the GTIOCnm pin output with the OAE and OBE bits in the GTIOR register.
7	Set buffer operation	Set buffer operation with the CCRA[1:0] and CCRB[1:0] bits in the GTBER register. In Figure 20.21, CCRA[1:0] = 01b and CCRB[1:0] = 01b.
8	Set compare match value	Set the GTIOCnA and GTIOCnB pins transitions in the GTCCRA and GTCCRB registers, respectively.
9	Set buffer value	For buffer operation, set the GTIOCnA and GTIOCnB pins transitions in 1 cycle after the current cycle in the GTCCRC and GTCCRE registers, respectively. For double buffer operation, also set the GTIOCnA and GTIOCnB pins transitions in 2 cycles after the current cycle in the GTCCRD and GTCCRF registers, respectively.

Table 20.17 Example setting for triangle-wave PWM mode 1 (2 of 2)

No.	Step name	Description
10	Start count operation	Set the GTCR.CST bit to 1 to start count operation.
11	Set buffer value for each cycle	For buffer operation, set the GTIOCnA and GTIOCnB pins transitions in 1 cycle after the current cycle in the GTCCRC and GTCCRE registers, respectively. For double buffer operation, also set the GTIOCnA and GTIOCnB pins transitions in 2 cycles after the current cycle in the GTCCRD and GTCCRF registers, respectively.

Note: n: 0 to 5
m: A, B

20.3.3.4 Triangle-Wave PWM Mode 2 (32-Bit Transfer at Crest and Trough)

Similarly to triangle-wave PWM mode 1, in triangle-wave PWM mode 2 the cycle is set in GTPR. The GTCNT counter performs triangle-wave (full-wave) operation, and a PWM waveform is output to the GTIOCnA or GTIOCnB pin (n = 0 to 5) when a GTCCRA or GTCCRB compare match occurs. The buffer transfer is performed at both crests and troughs. The pin output value can be selected from low output, high output, or toggle output separately for a compare match and for the cycle end according to the GTIOR setting.

By setting GTDTCR, GTDVU, a compare match value for a negative-phase waveform with dead time can automatically be set to GTCCRB.

Figure 20.22 shows an example of triangle-wave PWM mode 2 operation, and Table 20.18 shows an example for setting triangle-wave PWM mode 2.

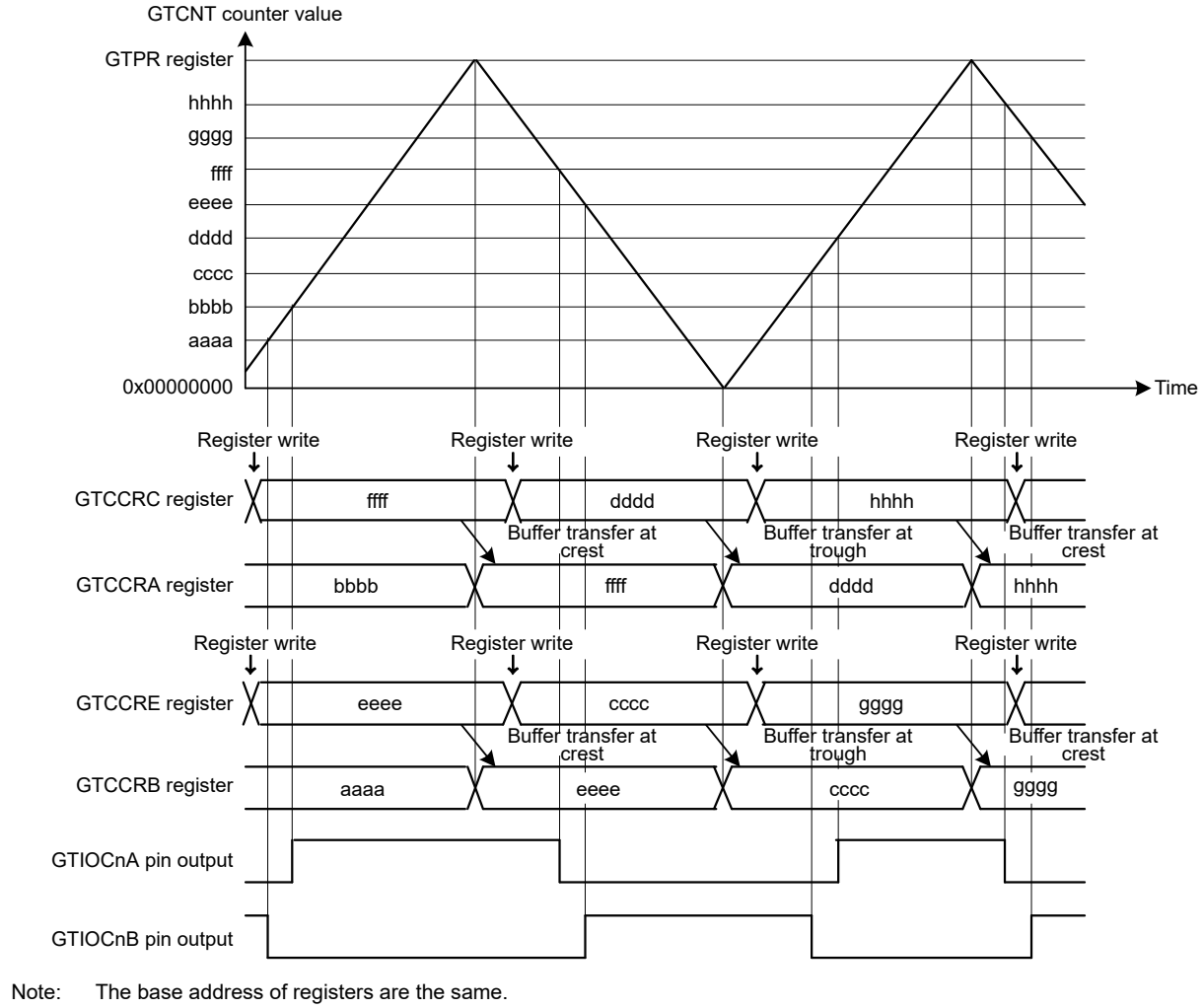

Note: The base address of registers are the same.

Figure 20.22 Example of triangle-wave PWM mode 2 operation with buffer operation, low output from the GTIOCnA pin and high output from the GTIOCnB pin at count start, output toggled at GTCCRA/ GTCCRB compare match, and output retained at cycle end

Table 20.18 Example for setting triangle-wave PWM mode 2 (1 of 2)

No.	Step name	Description
1	Set operating mode	Set the operating mode with the GTCR.MD[2:0] bits. In Figure 20.22, 101b (triangle-wave PWM mode 2) is set.
2	Select count clock	Select the count clock with the GTCR.TPCS[3:0] bits.
3	Set cycle	Set the cycle in the GTPR register.
4	Set initial value for counter	Set the initial value in the GTCNT counter.
5	Set GTIOCnm pin function	Set the GTIOCnm pin function with the GTIOA[4:0] and GTIOB[4:0] bits in the GTIOR register. In Figure 20.22, GTIOA[4:0] = 00011b and GTIOB[4:0] = 10011b.
6	Enable GTIOCnm pin output	Set to enable the GTIOCnm pin output with the OAE and OBE bits in the GTIOR register.
7	Set buffer operation	Set buffer operation with the CCRA[1:0] and CCRB[1:0] bits in the GTBER register. In Figure 20.22, CCRA[1:0] = 01b and CCRB[1:0] = 01b.
8	Set compare match value	Set the GTIOCnA and GTIOCnB pins transitions in the GTCCRA and GTCCRB registers, respectively.

Table 20.18 Example for setting triangle-wave PWM mode 2 (2 of 2)

No.	Step name	Description
9	Set buffer value	For buffer operation, set the GTIOCnA and GTIOCnB pins transitions in half cycle after the current cycle in the GTCCRC and GTCCRE registers, respectively. For double buffer operation, also set the GTIOCnA and GTIOCnB pins transitions in 1 cycle after the current cycle in the GTCCRD and GTCCRF registers, respectively.
10	Start count operation	Set the GTCR.CST bit to 1 to start count operation.
11	Set buffer value for each half cycle	For buffer operation, set the GTIOCnA and GTIOCnB pins transitions in half cycle after the current cycle in the GTCCRC and GTCCRE registers, respectively. For double buffer operation, also set the GTIOCnA and GTIOCnB pins transitions in 1 cycle after the current cycle in GTCCRD and GTCCRF registers, respectively.

Note: n: 0 to 5
m: A, B

20.3.3.5 Triangle-Wave PWM Mode 3 (64-Bit Transfer at Trough)

The triangle-wave PWM mode 3 is a mode in which the cycle is set in GTPR. The GTCNT counter performs triangle-wave (full-wave) operation and a PWM waveform is output to the GTIOCnA or GTIOCnB pin (n = 0 to 5) at a compare match of GTCCRA or GTCCRB with buffer operation fixed. Buffer operation in triangle-wave PWM mode 3 is different from the usual buffer operation. Buffer transfer is performed from the following:

- GTCCRC to GTCCRA at the trough
- GTCCRE to GTCCRB at the trough
- GTCCRD to temporary register A at the trough
- GTCCRF to temporary register B at the trough
- Temporary register A to GTCCRA at the crest
- Temporary register B to GTCCRB at the crest.

The pin output value can be selected from low output, high output, or toggled output separately for a compare match and for the cycle end according to the GTIOR setting.

By setting GTDTCR, GTDVU, a compare match value for a negative-phase waveform with dead time can automatically be set to GTCCRB.

Figure 20.23 shows an example of triangle-wave PWM mode 3 operation, and Table 20.19 shows an example for setting triangle-wave PWM mode 3.

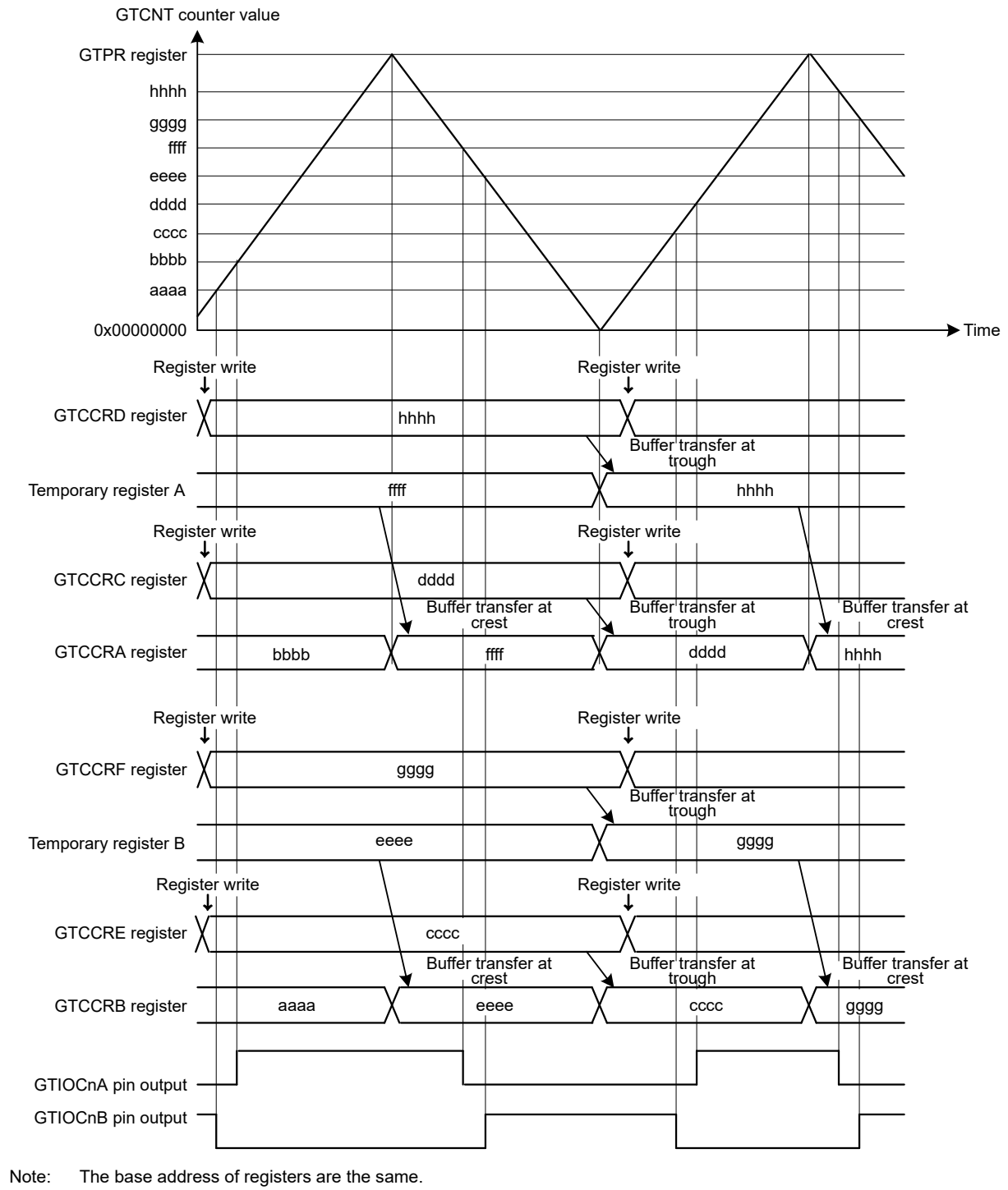

Note: The base address of registers are the same.

Figure 20.23 Example of triangle-wave PWM mode 3 operation with low output from the GTIOCnA pin and high output from the GTIOCnB pin at count start, output toggled at GTCCRA/GTCCRB compare match, and output retained at cycle end

Table 20.19 Example setting for triangle-wave PWM mode 3 (1 of 2)

No.	Step name	Description
1	Set operating mode	Set the operating mode with the GTCR.MD[2:0] bits. In Figure 20.23, 110b (triangle-wave PWM mode 3) is set.
2	Select count clock	Select the count clock with the GTCR.TPCS[3:0] bits.

Table 20.19 Example setting for triangle-wave PWM mode 3 (2 of 2)

No.	Step name	Description
3	Set cycle	Set the cycle in the GTPR register.
4	Set initial value for counter	Set the initial value in the GTCNT counter.
5	Set GTIOCnm pin function	Set the GTIOCnm pin function with the GTIOA[4:0] and GTIOB[4:0] bits in the GTIOR register. In Figure 20.23, GTIOA[4:0] = 00011b and GTIOB[4:0] = 10011b.
6	Enable GTIOCnm pin output	Set to enable the GTIOCnm pin output with the OAE and OBE bits in the GTIOR register.
7	Set compare match value	Set the GTIOCnA pin transition immediately after the count start in the GTCCRC and GTCCRD registers and the GTIOCnB pin transition in the GTCCRE and GTCCRF registers.
8	Set forcible buffer transfer	Set the GTBER.CCRSWT bit to 1 to transfer buffer register data forcibly.
9	Set buffer value	Set the GTIOCnA pin transition in 1 cycle after the current cycle in the GTCCRC and GTCCRD registers and the GTIOCnB pin transition in the GTCCRE and GTCCRF registers.
10	Start count operation	Set the GTCR.CST bit to 1 to start count operation.
11	Set buffer value for each cycle	Set the GTIOCnA pin transition in 1 cycle after the current cycle in the GTCCRC and GTCCRD registers and the GTIOCnB pin transition in the GTCCRE and GTCCRF registers.

Note: n: 0 to 5
m: A, B

20.3.4 Automatic Dead Time Setting Function

By setting GTDTCR, a compare match value for a negative waveform with dead time obtained by a compare match value for a positive waveform (GTCCRA value) and specified dead time value (GTDVU value) can automatically be set to GTCCRB. The automatic dead time setting function can be used in saw-wave one-shot pulse mode and all the triangle PWM modes.

Dead time for the changing point of a negative waveform is set in the GTDVU register.

Values for automatic dead time setting can be read from GTCCRB. Writing to GTCCRB is prohibited when the automatic dead time setting function is used. Dead time setting beyond the cycle is also prohibited.

When a dead time error occurs, the compare match values for positive and negative waveforms are adjusted to generate the waveforms with the dead time as shown in Table 20.20. The adjusted value for the negative waveform is set for GTCCRB automatically. The adjusted value for the positive waveform is used as internal signal and not set for GTCCRA.

In saw-wave one-shot pulse mode, if the order of the change point becomes inconsistent by adjustment of the waveform change point due to occurrence of dead time errors, or if the change point exceeds the count period even after the adjustment, the complementary relation between the positive and negative-phases cannot be guaranteed.

The automatic dead time value setting to GTCCRB is performed at the next clock cycle count when registers that are used for calculating the automatic dead time value are updated. In triangle-wave mode, it also can be done at the next count clock from the current crest.

Table 20.20 Adjustment of the waveform change point when a dead-time error occurs

Mode	Count direction	Period	Condition for dead time error	Change point of the positive-phase waveform after adjustment	Change point of the negative-phase waveform after adjustment
Sawtooth-wave one-shot pulse mode	Up-counting	First half	GTCCRA - GTDVU < 0	GTDVU	0
		Second half	GTCCRA + GTDVU > GTPR	GTPR - GTDVU	GTPR
	Down-counting	First half	GTCCRA + GTDVU > GTPR	GTPR - GTDVU	GTPR
		Second half	GTCCRA - GTDVU < 0	GTDVU	0
Triangle-wave PWM mode 1/2/3	Up-counting	(First half)	GTCCRA - GTDVU ≤ 0	GTDVU + 1	1
	Down-counting	(Second half)	GTCCRA - GTDVU < 0	GTDVU	0

Figure 20.24 to Figure 20.27 show examples of automatic dead time setting function operation. Table 20.21 and Table 20.22 show the setting examples.

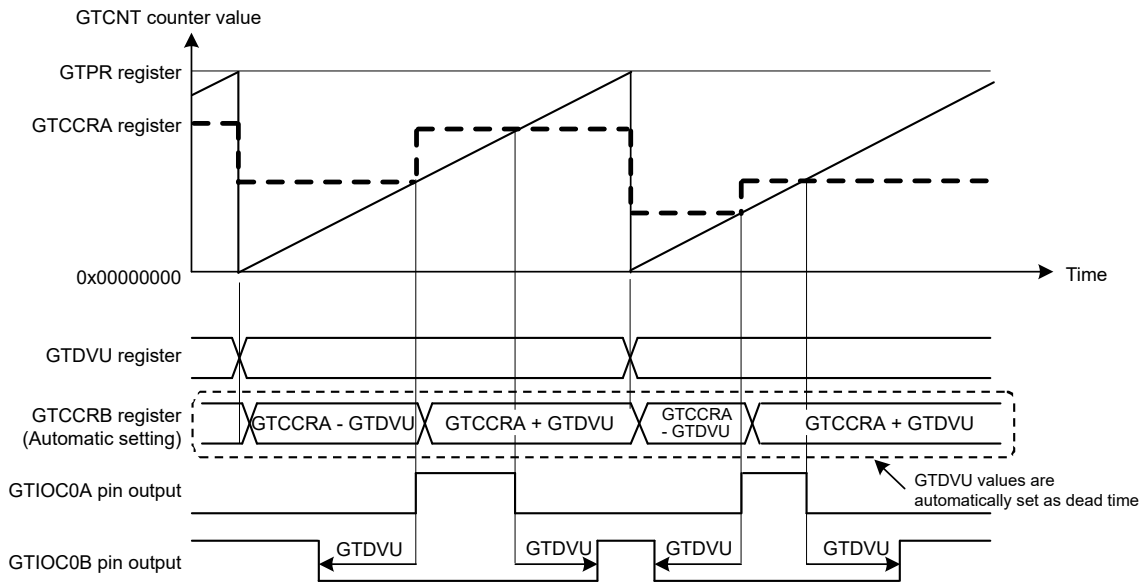

Note: The base address of registers are the same.

Figure 20.24 Example of automatic dead time setting function operation in saw-wave one-shot pulse mode, up-counting, and active-high

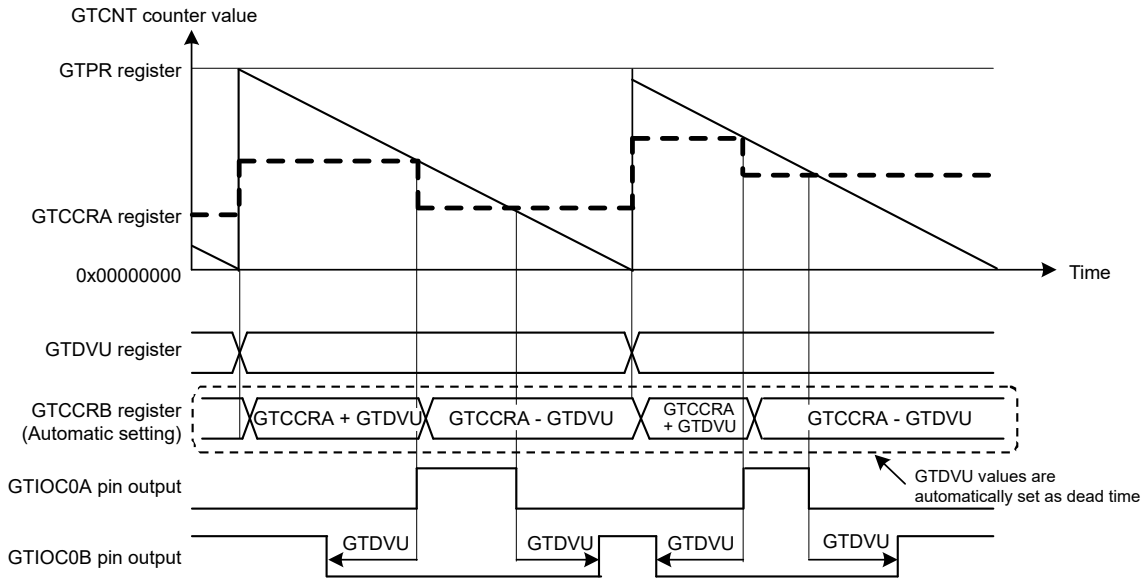

Note: The base address of registers are the same.

Figure 20.25 Example of automatic dead time setting function operation in saw-wave one-shot pulse mode, down-counting, and active-high

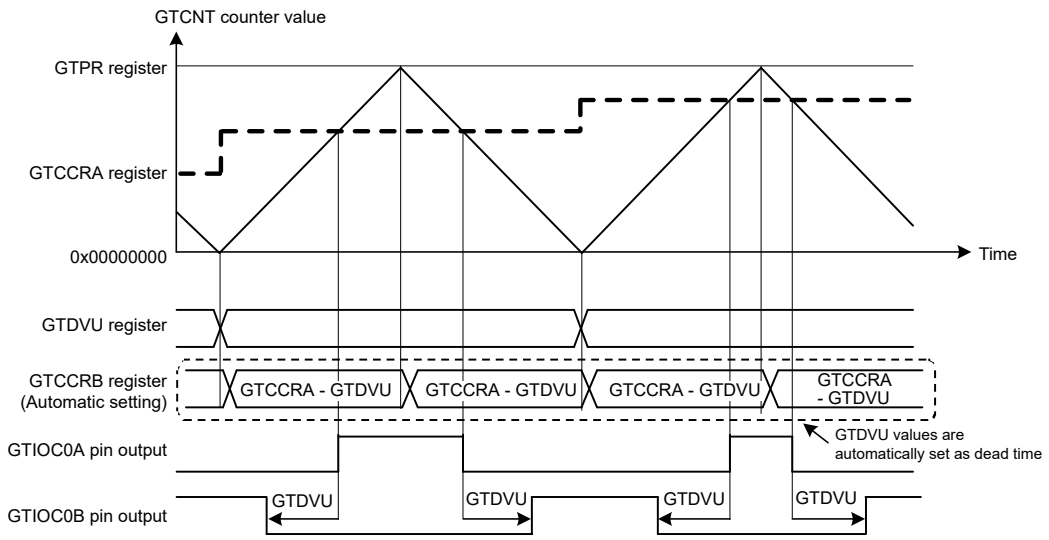

Note: The base address of registers are the same.

Figure 20.26 Example of automatic compare-match value setting function with dead time in triangle-wave PWM mode 1, and active-high

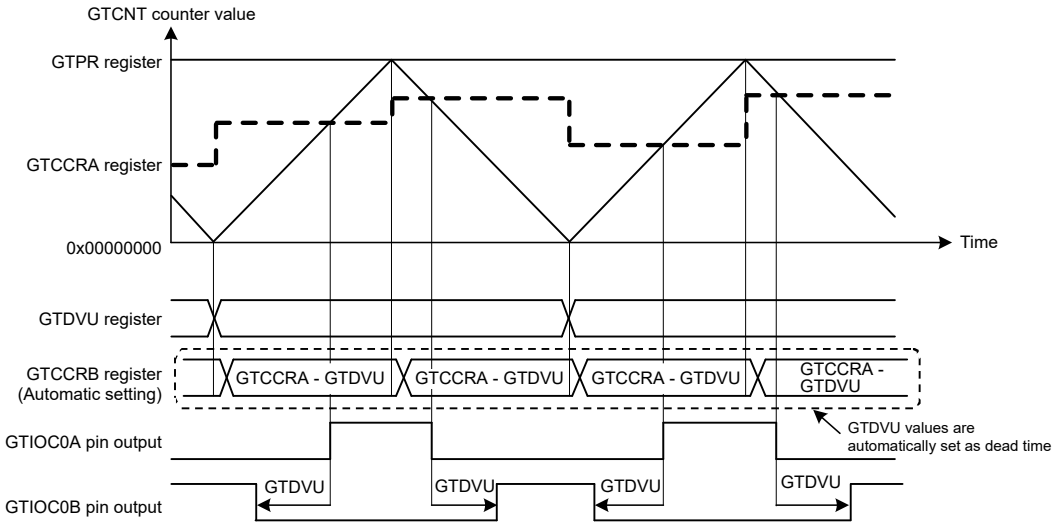

Note: The base address of registers are the same.

Figure 20.27 Example of automatic compare-match value setting function with dead time in triangle-wave PWM mode 2 or 3, and active-high

Table 20.21 Example setting for automatic dead time setting function in saw-wave one-shot pulse mode, and triangle-wave PWM mode 3 (1 of 2)

No.	Step Name	Description
1	Set operating mode	Set the operating mode with the GTCR.MD[2:0] bits. In Figure 20.24 and Figure 20.25, 001b (saw-wave one-shot pulse mode) is set. In Figure 20.27, 110b (triangle-wave PWM mode 3) is set.

Table 20.21 Example setting for automatic dead time setting function in saw-wave one-shot pulse mode, and triangle-wave PWM mode 3 (2 of 2)

No.	Step Name	Description
2	Set count direction	Select the count direction (up or down) with the GTUDDTYC register. In Figure 20.24, 01b is set after 11b is set in the GTUDDTYC[1:0] bits (up count). In Figure 20.25, 00b is set after 10b is set in the GTUDDTYC[1:0] bits (down count).
3	Select count clock	Select the count clock with the GTCR.TPCS[3:0] bits.
4	Set cycle	Set the cycle in the GTPR register.
5	Set initial value for counter	Set the initial value in the GTCNT counter.
6	Set GTIOCnm pin function	Set the GTIOCnm pin function with the GTIOA[4:0] and GTIOB[4:0] bits in the GTIOR register. In Figure 20.24, Figure 20.25, and Figure 20.27, GTIOA[4:0] = 00011b and GTIOB[4:0] = 10011b.
7	Enable GTIOCnm pin output	Set to enable the GTIOCnm pin output with the OAE and OBE bits in the GTIOR register.
8	Set buffer value for compare match	Set the GTIOCnA pin transition immediately after the count start in the GTCCRC and GTCCRD registers.
9	Set forcible buffer transfer for compare match	Set the GTBER.CCRSWT bit to 1 to transfer buffer register data forcibly to the GTCCRA register.
10	Set buffer value for compare match	Set the GTIOCnA pin transition in 1 cycle after the current cycle in the GTCCRC and GTCCRD registers.
11	Set automatic dead time setting function	Set the GTDTCR.TDE bit to 1 to enable the automatic dead time setting function.
12	Set dead time value	Set the dead time value in the GTDVU register.
13	Start count operation	Set the GTCR.CST bit to 1 to start count operation.
14	Set buffer value for each cycle	For buffer operation, set the GTIOCnA pin transition in 1 cycle after the current cycle in the GTCCRC and GTCCRD registers.

Note: n: 0 to 5
m: A, B

Table 20.22 Example setting for automatic dead time setting function in triangle-wave PWM mode 1 or 2 (1 of 2)

No.	Step Name	Description
1	Set operating mode	Set the operating mode with the GTCR.MD[2:0] bits. In Figure 20.26, 100b (triangle-wave PWM mode 1) is set. In Figure 20.27, 101b (triangle-wave PWM mode 2) is set.
2	Select count clock	Select the count clock with the GTCR.TPCS[3:0] bits.
3	Set cycle	Set the cycle in the GTPR register.
4	Set initial value for counter	Set the initial value in the GTCNT counter.
5	Set GTIOCnm pin function	Set the GTIOCnm pin function with the GTIOA[4:0] and GTIOB[4:0] bits in the GTIOR register. In Figure 20.26 and Figure 20.27, GTIOA[4:0] = 00011b and GTIOB[4:0] = 10011b.
6	Enable GTIOCnm pin output	Set to enable the GTIOCnm pin output with the OAE and OBE bits in the GTIOR register.
7	Set buffer operation for compare match	Set buffer operation with the CCRA[1:0] bits in the GTBER register.
8	Set compare match value	Set the GTIOCnA pin transition in the GTCCRA register.
9	Set buffer value for compare match	For buffer operation, set the GTIOCnA pin transition in 1 cycle after the current cycle (in triangle-wave PWM mode 1) or half cycle after the current cycle (in triangle-wave PWM mode 2) in the GTCCRC register. For double buffer operation, also set the GTIOCnA pin transition in 2 cycles after the current cycle (in triangle-wave PWM mode 1) or 1 cycle after the current cycle (in triangle-wave PWM mode 2) in the GTCCRD registers.
10	Set automatic dead time setting function	Set the GTDTCR.TDE bit to 1 to enable the automatic dead time setting function.
11	Set dead time value	Set the dead time value in the GTDVU register.
12	Start count operation	Set the GTCR.CST bit to 1 to start count operation.

Table 20.22 Example setting for automatic dead time setting function in triangle-wave PWM mode 1 or 2 (2 of 2)

No.	Step Name	Description
13	Set buffer value for each cycle	When the compare match register is used for buffer operation, set the GTIOCnA pin transition in 1 cycle after the current cycle (in triangle-wave PWM mode 1) or half cycle after the current cycle (in triangle-wave PWM mode 2) in GTCCRC. When the compare match register is used for double-buffered operation, set the GTIOCnA pin changing point in two cycles after the current cycle (in triangle-wave PWM mode 1) or one cycle after the current cycle (in triangle-wave PWM mode 2) in GTCCRD.

Note: n: 0 to 5
m: A, B

20.3.5 Count Direction Changing Function

The count direction of the GTCNT counter can be changed by modifying the UD bit in GTUDDTYC.

In saw-wave mode, if the UD bit in GTUDDTYC is modified during count operation, the count direction is changed at an overflow (when modified during up-counting) or an underflow (when modified during down-counting). If the GTUDDTYC.UD bit is modified while the count operation stops and the GTUDDTYC.UDF bit is 0, the GTUDDTYC.UD bit modification is not reflected at the start of counting and the count direction is changed at an overflow or an underflow. If the UDF bit is set to 1 while the count operation stops, the GTUDDTYC.UD bit value at that time is reflected at the start of counting.

In triangle-wave mode, the count direction does not change even though the UD bit in GTUDDTYC is modified during the count operation. Similarly, even though the GTUDDTYC.UD bit is modified while the count operation stops and GTUDDTYC.UDF bit is 0, the GTUDDTYC.UD bit value is not reflected to the count operation. If the GTUDDTYC.UDF bit is set to 1 while the count operation is stopped, the GTUDDTYC.UD bit value at that time is reflected at the start of counting.

If the count direction changes during a saw-wave count operation, the GTPR value after the start of up-counting is reflected in the count cycle during up-counting and the GTPR value after the start of down-counting is reflected in the count cycle during down-counting.

Figure 20.28 shows an example of count direction changing function operation.

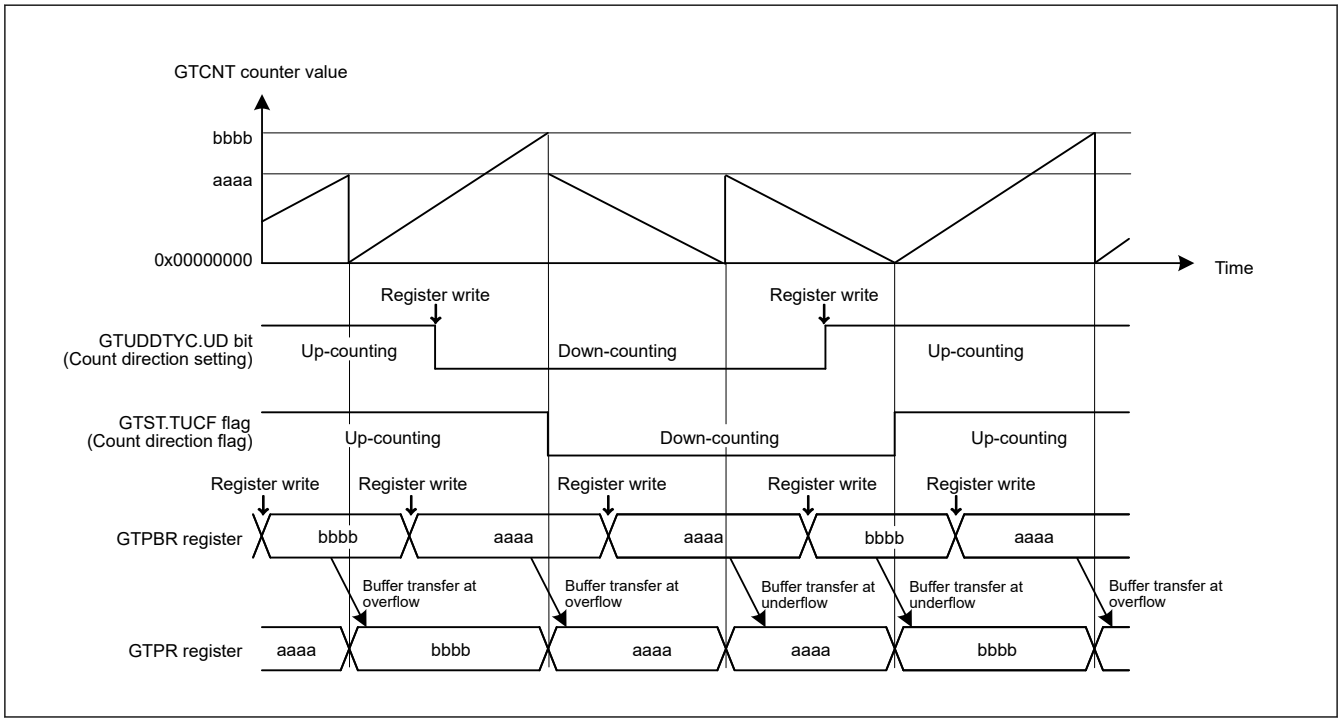

Figure 20.28 Example of a count direction changing function operation during buffer operation

20.3.6 Function of Output Duty 0% and 100%

The output duty of the GTIOCnA pin and the GTIOCnB pin (n = 0 to 5) are set to 0% or 100% by changing the GTUDDTYC.OADTY bit or GTUDDTYC.OBDTY bit.

In saw-wave mode, if the GTUDDTYC.OADTY bit or the GTUDDTYC.OBDTY bit is modified during the count operation, the output duty setting is reflected at an overflow (when modified during up-counting) or an underflow (when modified during down-counting). If the GTUDDTYC.OADTY bit or the GTUDDTYC.OBDTY bit is modified while the count operation is stopped and the GTUDDTYC.OADTYF or the GTUDDTYC.OBDTYF bit is 0, the output duty modification is not reflected at the start of counting. The output duty changes at an overflow or an underflow. If the GTUDDTYC.OADTY bit or the GTUDDTYC.OBDTY bit is modified while the count operation is stopped and the GTUDDTYC.OADTYF or the GTUDDTYC.OBDTYF bit is 1, the GTUDDTYC.OADTY bit or the GTUDDTYC.OBDTY bit value at that time is reflected at the start of counting.

In triangle-wave mode, if the GTUDDTYC.OADTY bit or the GTUDDTYC.OBDTY bit is modified during the count operation, the output duty setting is reflected an underflow.

If the GTUDDTYC.OADTY bit or the GTUDDTYC.OBDTY bit is modified while the count operation is stopped and the GTUDDTYC.OADTYF or the GTUDDTYC.OBDTYF bit is 0, the output duty modification is not reflected at the start of counting. The output duty changes at an underflow. If the GTUDDTYC.OADTY bit or the GTUDDTYC.OBDTY bit is modified while the count operation stops and the GTUDDTYC.OADTYF or the GTUDDTYC.OBDTYF bit is 1, the output duty modification is reflected at the start of counting.

In performing 0% or 100% duty operation, GPT internally continues to:

- Perform compare match operation
- Set compare match flag
- Output interrupt
- Perform buffer operation.

When the control is changed from 0% or 100% duty setting to compare match, the output value of GTIOCnA pin at cycle end is decided by GTIOR.GTIOA[3:2] and GTUDDTYC.OADTYR. The output value of GTIOCnB pin at cycle end is decided by GTIOR.GTIOB[3:2] and GTUDDTYC.OBDTYR.

When GTIOR.GTIOA[3:2] and GTIOR.GTIOB[3:2] are set to 01b, the output pins output low at cycle end. When GTIOR.GTIOA[3:2] and GTIOR.GTIOB[3:2] are set to 10b, the output pins output high at cycle end.

GTUDDTYC.OADTYR selects the value that is the object of output retained/toggled at cycle end, when GTIOR.GTIOm[3:2] are set to 00b (output retained at cycle end) or when GTIOR.GTIOm[3:2] are set to 11b (output toggled at cycle end). Table 20.23 shows the values of GTIOCnA and GTIOCnB pin output at cycle end.

Table 20.23 Output values after releasing 0% or 100% duty setting (m = A, B)

GTIOR.GTIOm[3:2]	Compare match value at cycle end masked by 0% or 100% duty setting	GTUDDTYC.OmDTYR in duty 0% setting		GTUDDTYC.OmDTYR in duty 100% setting	
		0	1	0	1
00 (output retained at cycle end)	0	0	0	1	0
	1	0	1	1	1
01 (low output at cycle end)	—	0	0	0	0
10 (high output at cycle end)	—	1	1	1	1
11 (output toggled at cycle end)	0	1	1	0	1
	1	1	0	0	0

Figure 20.29 shows an example of output duty 0% and 100% function.

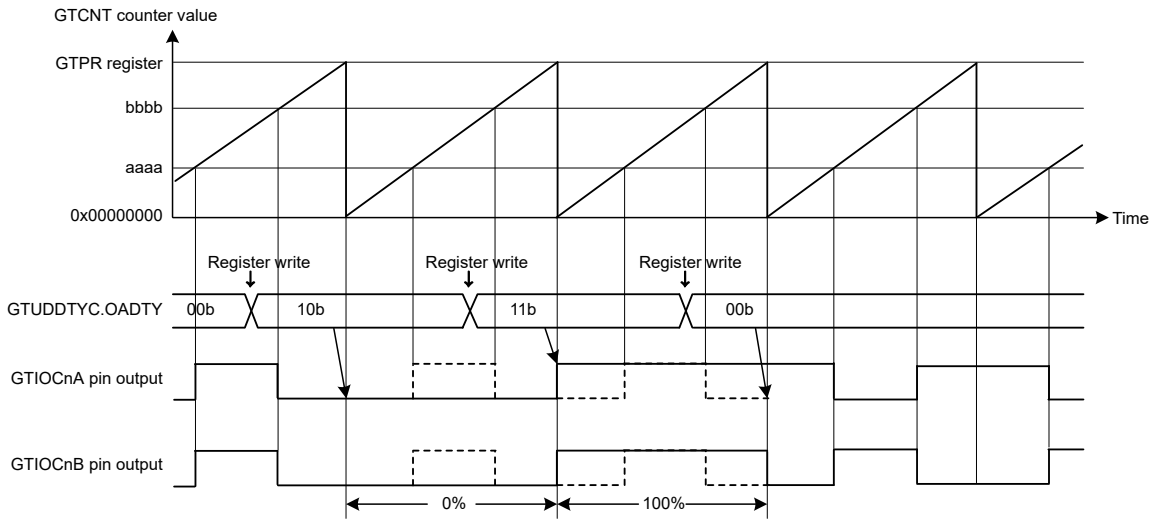

Note: The base address of registers are the same.

Note: [Setting examples]

GTIOR.GTIOA[4:0] bits:	00011b initial low output, output toggled at compare match, output retained at cycle end
GTUDDTYC.OADTYR bit:	0b The function selected by GTIOA[3:2] is applied to the output value when the duty cycle is set after release from 0 or 100% duty-cycle setting.
GTIOR.GTIOB[4:0] bits:	00011b initial low output, output toggled at compare match, output retained at cycle end
GTUDDTYC.OBDTYR bit:	1 The function of GTIOB[3:2] is applied to the compare match output value which is masked after 0 or 100% duty setting release.

Figure 20.29 Example of output duty 0% and 100% function

20.3.7 Hardware Count Start/Count Stop and Clear Operation

The GTCNT counter can be started, stopped, or cleared by the following hardware sources:

- External trigger input
- ELC event input
- GTIOCnA and GTIOCnB pin input (n = 0 to 5).

20.3.7.1 Hardware Start Operation

The GTCNT counter can be started by selecting a hardware source using GTSSR.

Figure 20.30 shows an example of a count start operation by a hardware source. Table 20.24 shows the setting example.

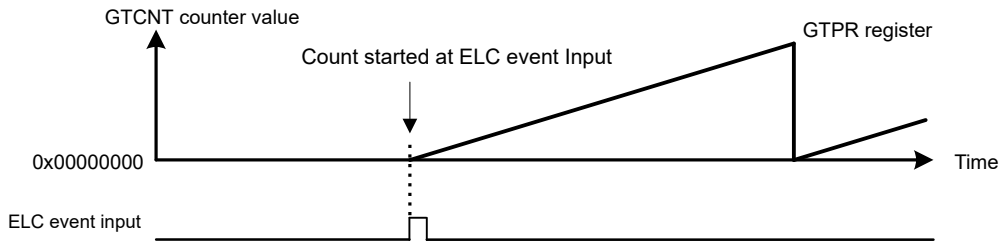

Note: ELC event input: ELC_GPTA event input

Figure 20.30 Example of count start operation by a hardware source started at the input of the signal from the ELC_GPTA event

Table 20.24 Example setting for count start operation by a hardware source

No.	Step Name	Description
1	Set operating mode	Set the operating mode with the GTCR.MD[2:0] bits. In Figure 20.30, 000b (saw-wave PWM mode) is set.
2	Set count direction	Select the count direction (up or down) with the GTUDDTYC register. In Figure 20.30, after 11b is set in the GTUDDTYC[1:0] bits, 01b is set in the GTUDDTYC[1:0] bits (up-counting).
3	Select count clock	Select the count clock with the GTCR.TPCS[3:0] bits.
4	Set cycle	Set the cycle in the GTPR register.
5	Set initial value for counter	Set the initial value in the GTCNT counter. In Figure 20.30, 0x00000000 is set.
6	Set hardware count start	Select a hardware source for starting count operation in the GTSSR register. In Figure 20.30, GTSSR.SSELCA = 1
7	Set hardware source operation	Set operation of the hardware source selected by the GTSSR register and start counting. In Figure 20.30, the ELC_GPTA event input operation is set.

20.3.7.2 Hardware Stop Operation

The GTCNT counter can be stopped by selecting a hardware source using GTPSR.

Figure 20.31 shows an example of a count stop operation by a hardware source. Table 20.25 shows the setting example. In this example, the count operation stops at the ELC_GPTA event input and restarts at the ELC_GPTB event input.

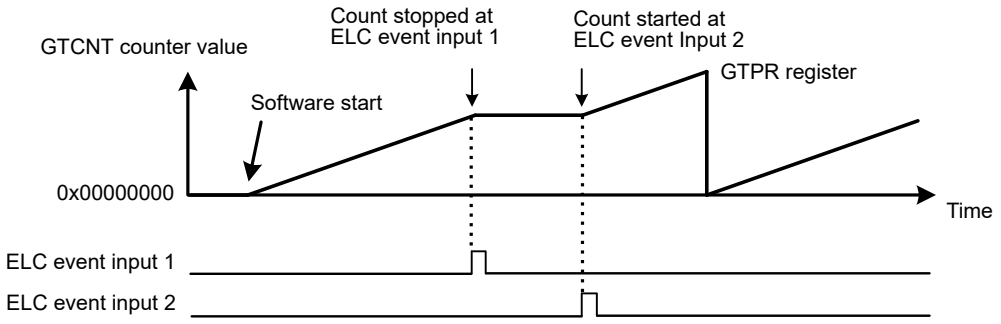

Note: ELC event input 1: ELC_GPTA event input
ELC event input 2: ELC_GPTB event input

Figure 20.31 Example of count stop operation by hardware source started by software, stopped at ELC_GPTA input, and restarted at ELC_GPTB input

Table 20.25 Example setting for count stop operation by a hardware source

No.	Step Name	Description
1	Set operating mode	Set the operating mode with GTCR.MD[2:0] bits. In Figure 20.31, 000b (saw-wave PWM mode) is set.
2	Set count direction	Select the count direction (up or down) with the GTUDDTYC register. In Figure 20.31, after 11b is set in GTUDDTYC[1:0], 01b is set in GTUDDTYC[1:0] (up-counting).
3	Select count clock	Select the count clock with GTCR.TPCS[3:0].
4	Set cycle	Set the cycle in GTPR.
5	Set initial value for counter	Set the initial value in the GTCNT counter. In Figure 20.31, 0x00000000 is set.
6	Set hardware count start	Select a hardware source for starting count operation in GTSSR register, and wait for count start by the hardware source. In Figure 20.31, GTSSR.SSELCB = 1.
7	Set hardware count stop	Select a hardware source for stopping count operation in GTPSR register and wait for count stop by the hardware source. In Figure 20.31, GTPSR.PSELCA = 1.
8	Set hardware source operation	Set operation of the hardware source selected in GTSSR register or GTPSR register, and start or stop counting. In Figure 20.31, ELC_GPTA input operation and ELC_GPTB input operation are set.

Figure 20.32 shows an example of a count start/stop operation by a hardware source. Table 20.26 shows the setting example. In this example, the counter operates during the high-level periods of the external trigger input GTETRGA.

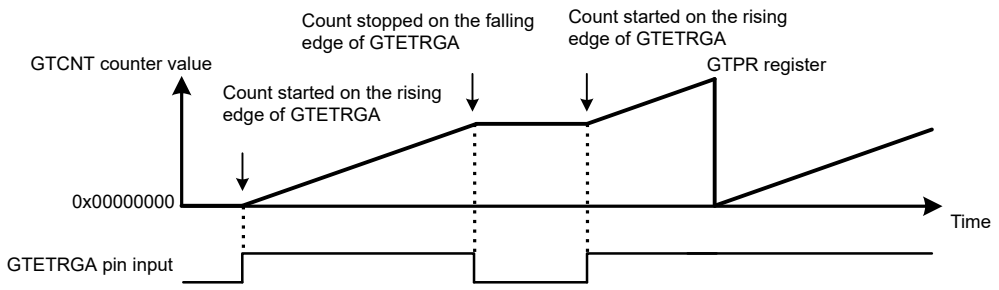

Figure 20.32 Example of count start/stop operation by a hardware source started on the rising edge of GTETRGA pin input, and stopped on the falling edge of GTETRGA pin input

Table 20.26 Example setting for count start/stop operation by a hardware source

No.	Step name	Description
1	Set operating mode	Set the operating mode with the GTCR.MD[2:0] bits. In Figure 20.32, 000b (saw-wave PWM mode) is set.
2	Set count direction	Select the count direction (up or down) with the GTUDDTYC register. In Figure 20.32, after 11b is set in the GTUDDTYC[1:0] bits, 01b is set in the GTUDDTYC[1:0] bits (up-counting).
3	Select count clock	Select the count clock with the GTCR.TPCS[3:0] bits.
4	Set cycle	Set the cycle in the GTPR register.
5	Set initial value for counter	Set the initial value in the GTCNT counter. In Figure 20.32, 0x00000000 is set.
6	Set hardware count start	Select a hardware source for starting count operation with the GTSSR register, and wait for count start by the hardware source. In Figure 20.32, GTSSR.SSGTRGAR = 1.
7	Set hardware count stop	Select a hardware source for stopping count operation with the GTPSR register, and wait for count stop by the hardware source. In Figure 20.32, GTPSR.PSGTRGAF = 1.
8	Set hardware source operation	Set operation of the hardware source selected in the GTSSR register or GTPSR register and start or stop counting. In Figure 20.32, the GTETRGA pin operation is set.

20.3.7.3 Hardware Clear Operation

The GTCNT counter can be cleared by selecting a hardware source using GTCSR. The GPTn_OVF/GPTn_UDF (n = 0 to 5) interrupt (overflow/underflow interrupt) is not generated when the GTCNT counter is cleared by a hardware source or by software.

Figure 20.33 and Figure 20.34 show examples of the GTCNT counter clearing operation by a hardware source. Table 20.27 shows the setting example. In this example, the GTCNT counter starts at the ELC_GPTA input, and the counter stops and clears at the ELC_GPTB input.

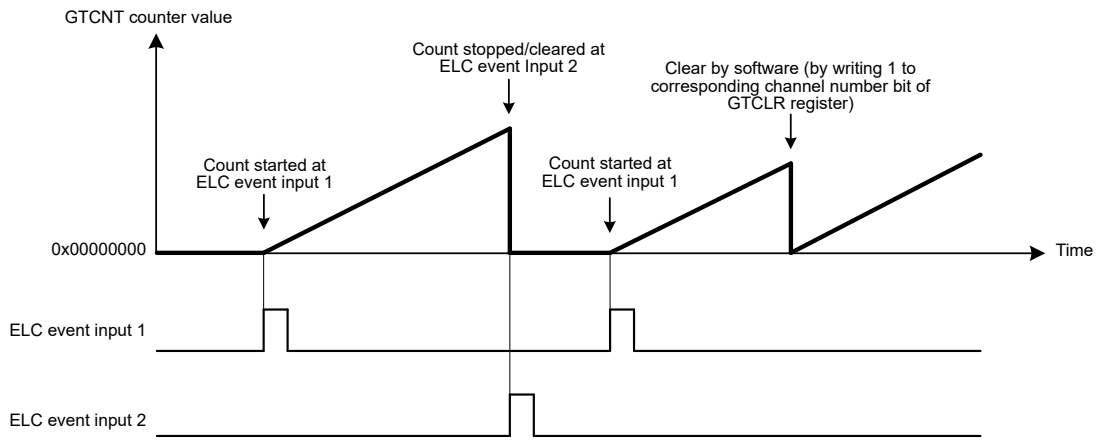

Note: ELC event input 1: ELC_GPTA event input
ELC event input 2: ELC_GPTB event input

Figure 20.33 Examples of count clearing operation by hardware source in saw wave up-counting, started at ELC_GPTA input, and stopped/cleared at ELC_GPTB input

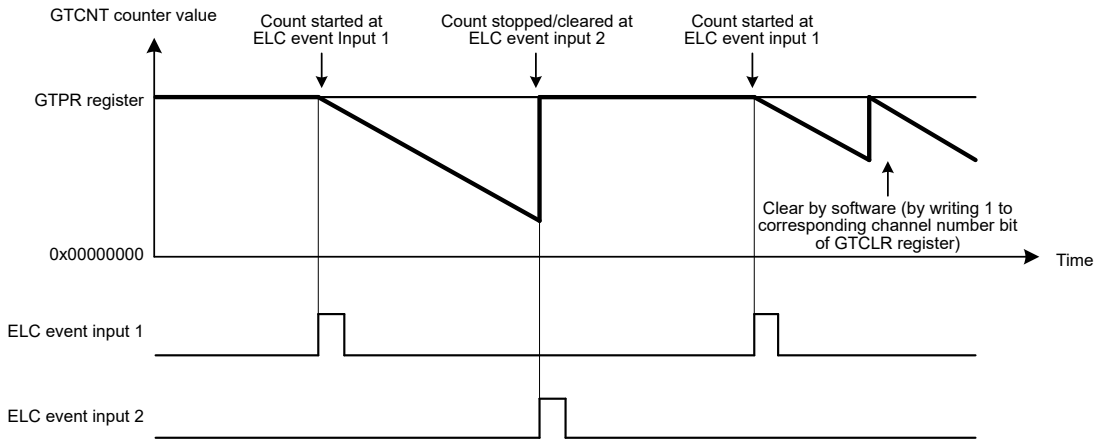

Note: ELC event input 1: ELC_GPTA event input
ELC event input 2: ELC_GPTB event input

Figure 20.34 Examples of count clearing operation by hardware source in saw wave down-counting, started at ELC_GPTA input, and stopped/cleared at ELC_GPTB input

Table 20.27 Example setting for count clearing operation by a hardware source (1 of 2)

No.	Step name	Description
1	Set operating mode	Set the operating mode with the GTCR.MD[2:0] bits. In Figure 20.33 and Figure 20.34, 000b (saw-wave PWM mode) is set.
2	Set count direction	Select the count direction (up or down) with the GTUDDTYC register. In Figure 20.33, after 11b is set in the GTUDDTYC[1:0] bits, 01b is set in the GTUDDTYC[1:0] bits (up-counting). In Figure 20.34, after 10b is set in the GTUDDTYC[1:0] bits, 00b is set in the GTUDDTYC[1:0] bits (down-counting).

Table 20.27 Example setting for count clearing operation by a hardware source (2 of 2)

No.	Step name	Description
3	Select count clock	Select the count clock with the GTCR.TPCS[3:0] bits.
4	Set cycle	Set the cycle in the GTPR register.
5	Set initial value for counter	Set the initial value in the GTCNT counter. In Figure 20.33, 0x00000000 is set. In Figure 20.34, the GTPR register value is set.
6	Set hardware count start	Select a hardware source for starting count operation in the GTSSR register, and wait for count start by the hardware source. In Figure 20.33 and Figure 20.34, GTSSR.SSELCA = 1.
7	Set hardware count stop	Select a hardware source for stopping count operation in the GTPSR register, and wait for count stop by the hardware source. In Figure 20.33 and Figure 20.34, GTPSR.PSELCB = 1.
8	Set hardware count clear	Select a hardware source for clearing count operation in the GTCSR register, and wait for count clear by the hardware source. In Figure 20.33 and Figure 20.34, GTCSR.CSELCB = 1.
9	Set hardware source operation	Set operation of the hardware source selected in the GTSSR register, GTPSR register or GTCSR register and start, stop or clear counting. In Figure 20.33 and Figure 20.34, the ELC_GPTA input and ELC_GPTB input are set.

The GPTn_OVF/GPTn_UDF (n = 0 to 5) interrupt (overflow/underflow interrupt) is not generated when the counter is cleared by a hardware source or by software.

Figure 20.35 shows the relationship between the counter clearing by a hardware source and the GPTn_OVF (n = 0 to 5) interrupt.

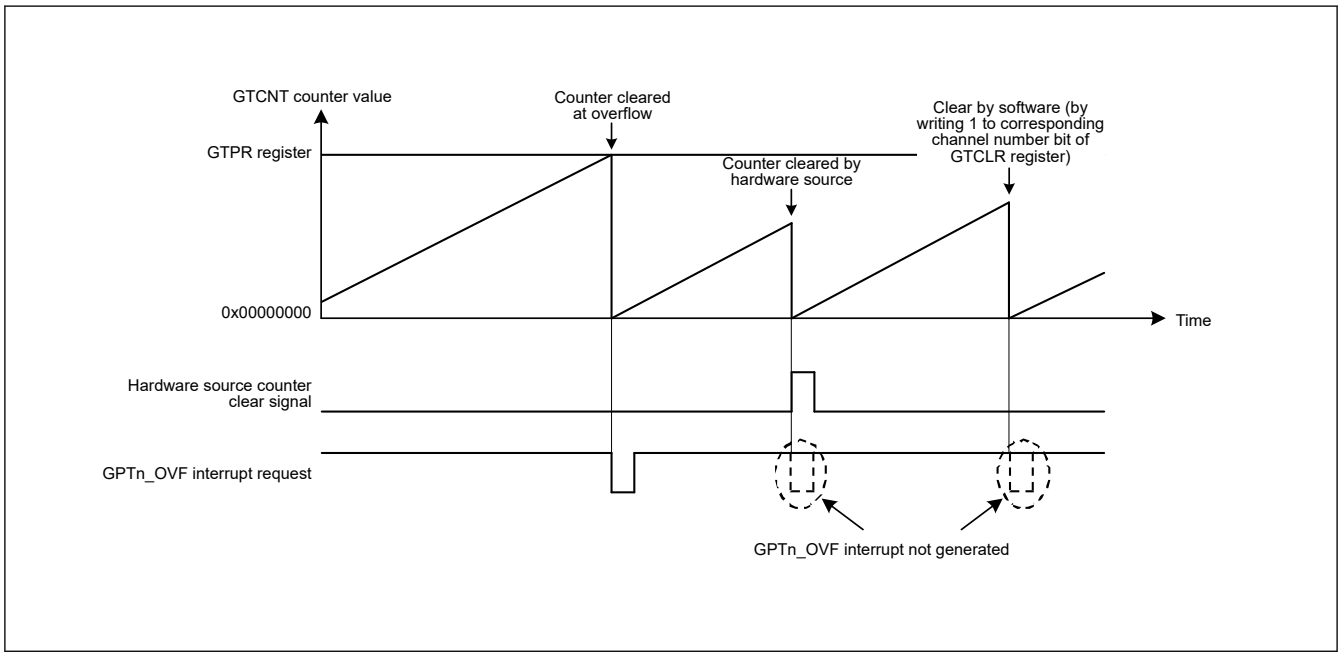

Figure 20.35 Relationship between counter clearing by hardware source and GPTn_OVF (n = 0 to 5) interrupt

20.3.8 Synchronized Operation

Synchronized operation on channels such as a synchronized start, stop, and clear operation can be performed.

20.3.8.1 Synchronized Operation by Software

The GTCNT counters can be started, stopped, and cleared on multiple channels by setting the associated GTSTR, GTSTP, or GTCLR bits simultaneously to 1.

Count start with a phase difference is possible by setting the initial value in the GTCNT counter and setting the associated GTSTR bits simultaneously to 1.

Because the clock of count operation is selected by GTCR.TPCS[3:0] bits in respective channels, if the clock period of each channel that performs synchronous operation (count start/stop/clear) is different from the others, the synchronous operation timings of every channels are not exactly the same.

Figure 20.36 shows an example of a simultaneous start, stop, and clear by software. Figure 20.37 shows an example of phase start operation by software. Figure 20.38, Figure 20.39, Figure 20.40 show an example of simultaneous start/stop/clearing with different count period.

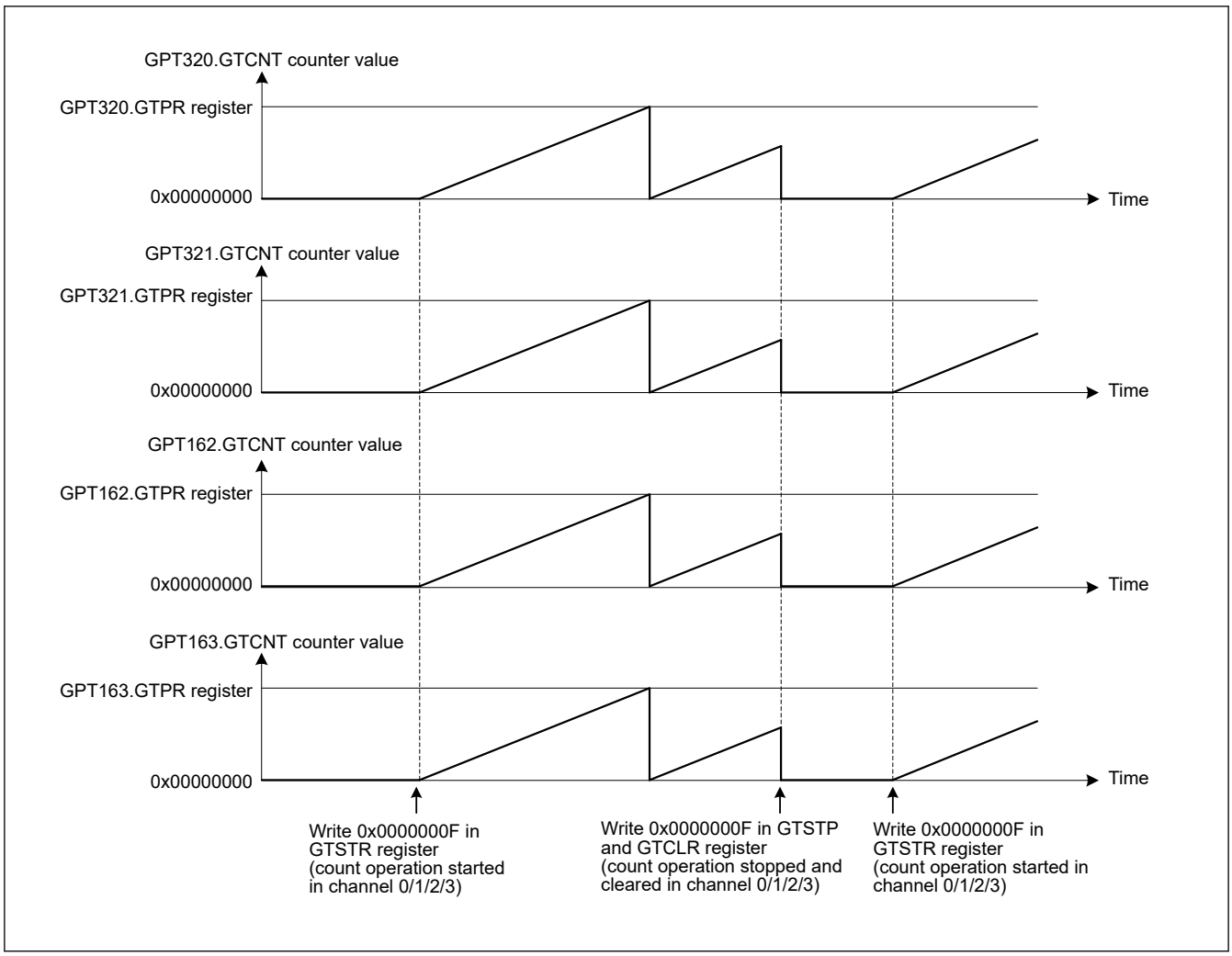

Figure 20.36 Example of a simultaneous start, stop, and clear by software with the same count cycle (GTPR register value)

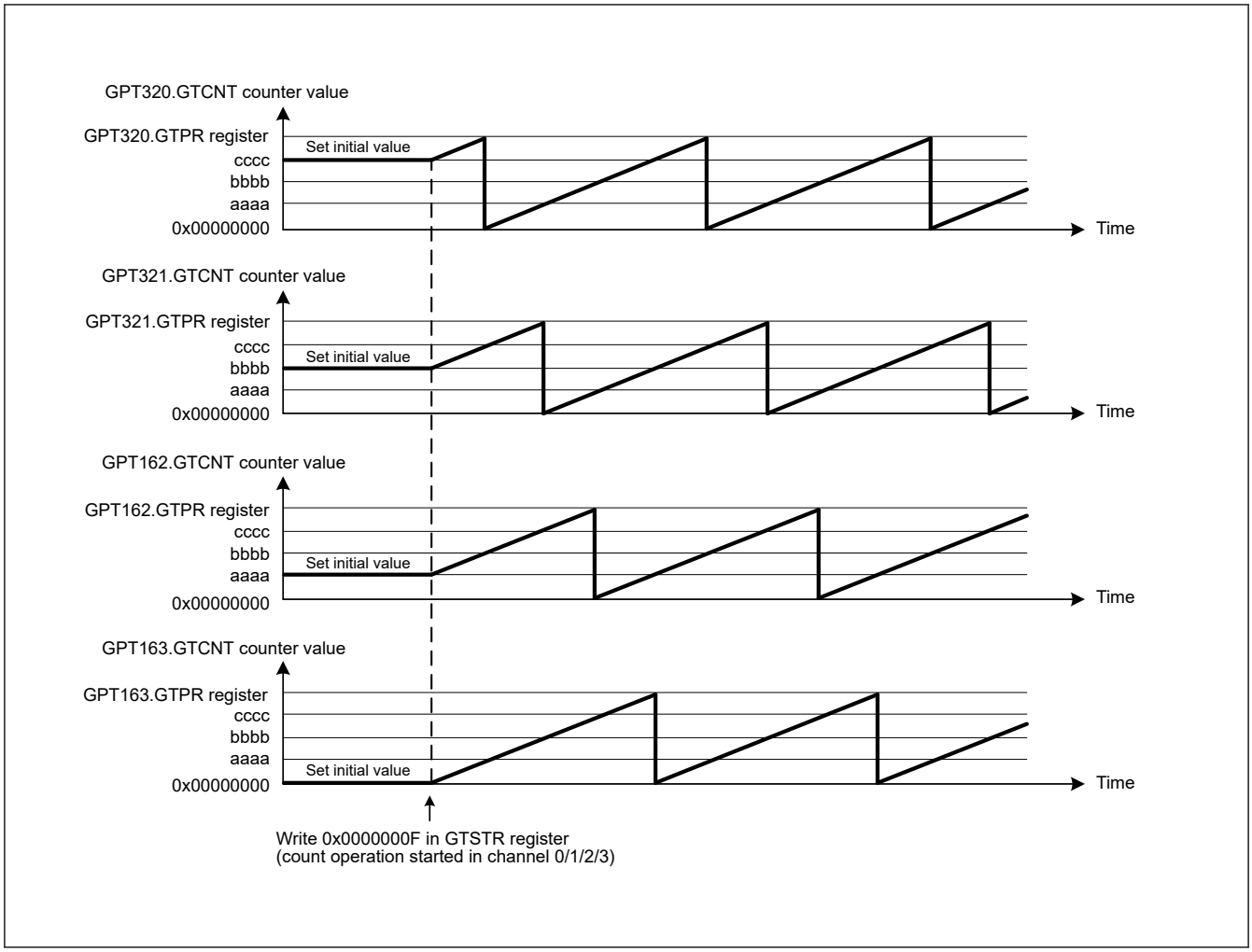

Figure 20.37 Example of software phase start with the same count cycle (GTPR register value)

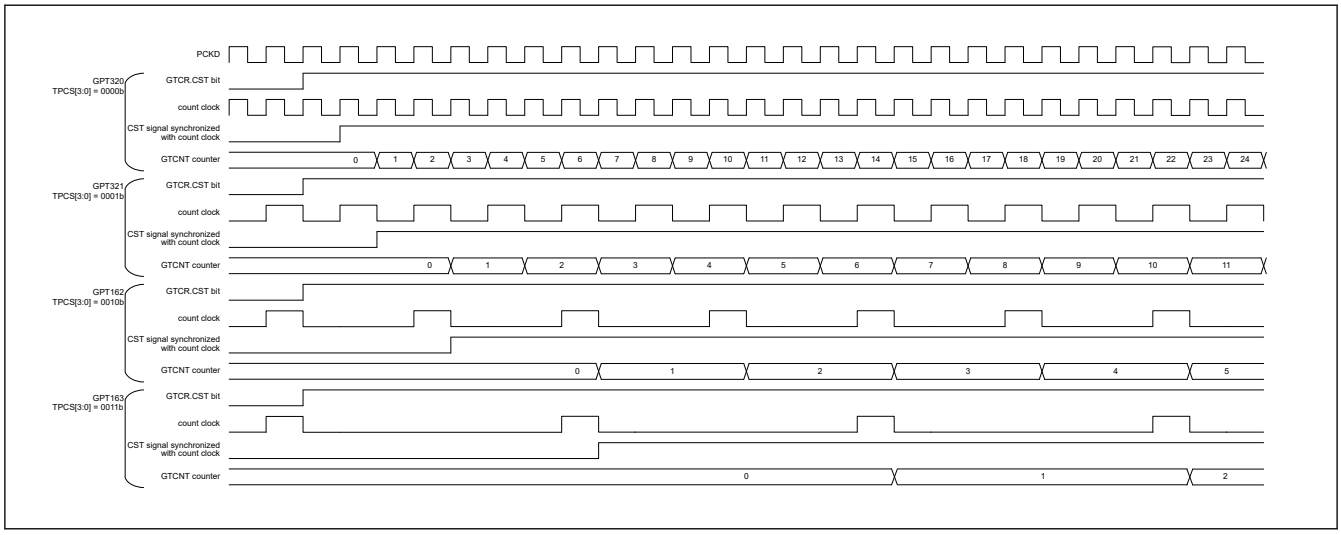

Figure 20.38 Example of Simultaneous Start Operation by Software (with Different Count Period)

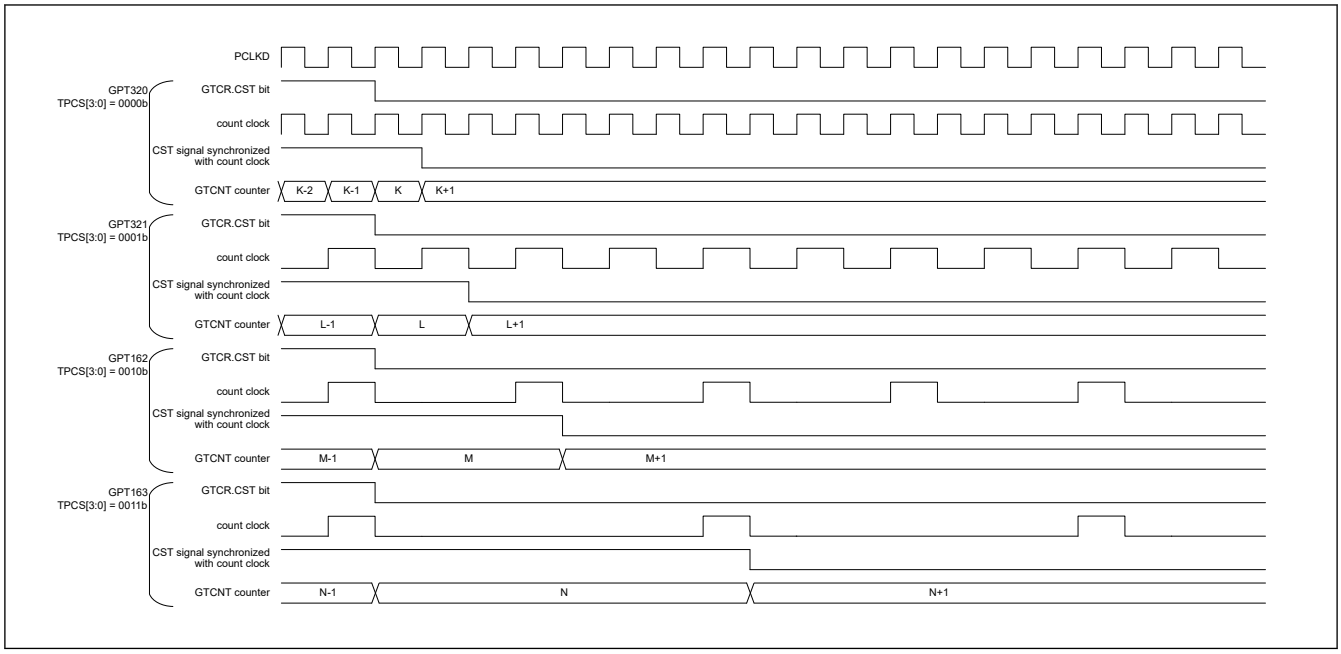

Figure 20.39 Example of Simultaneous Stop Operation by Software (with Different Count Period)

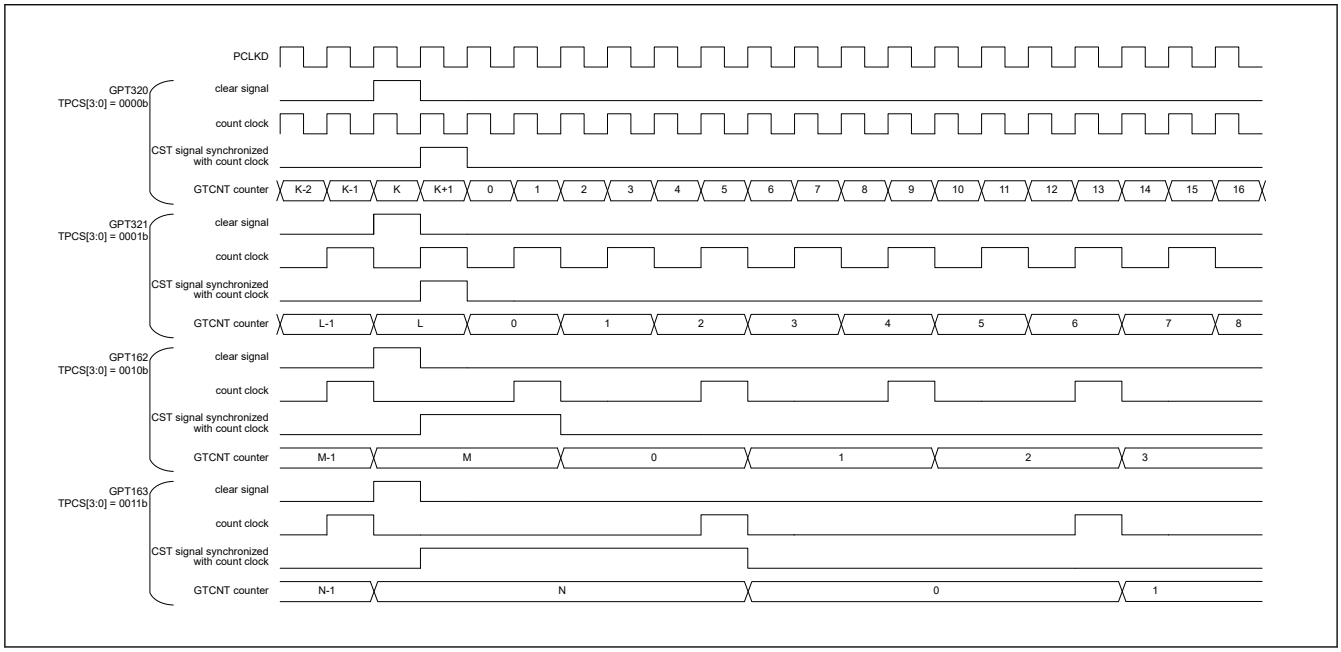

Figure 20.40 Example of Simultaneous Clearing Operation by Software (with Different Count Period)

20.3.8.2 Synchronized Operation by Hardware

The counters for multiple channels can be started, stopped, and cleared simultaneously by the following hardware sources. Hardware sources that can cause a synchronized operation are external trigger input and ELC event input. Synchronized operation through the GTIOCnA and GTIOCnB pin inputs is possible by setting an ELC event due to input capture as a hardware source (n = 0 to 5).

Figure 20.41 shows an example of a simultaneous start, stop, and clear operation by a hardware source. Table 20.28 shows the setting example.

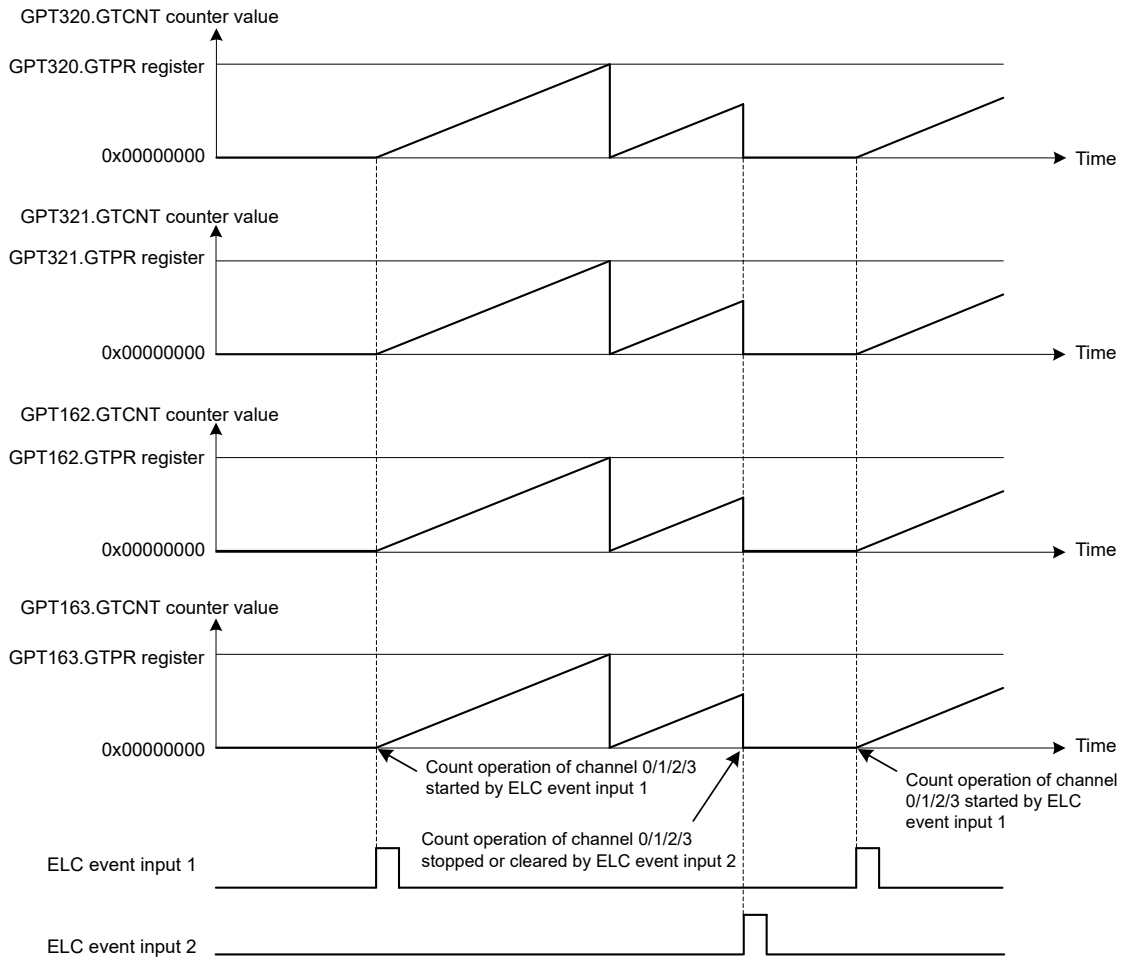

Note: ELC event input 1: ELC_GPTA event input
ELC event input 2: ELC_GPTB event input

Figure 20.41 Example of a simultaneous start, stop, and clear by a hardware source with the same count cycle (GTPR register value)

Table 20.28 Example setting for simultaneous start by a hardware source (1 of 2)

No.	Step name	Description
1	Set operating mode	Set the operating mode with the GTCR.MD[2:0] bits. In Figure 20.41, 000b (saw-wave PWM mode) is set.
2	Set count direction	Select the count direction (up or down) with the GTUDDTYC register. In Figure 20.41, after 11b is set in the GTUDDTYC[1:0] bits, 01b is set in the GTUDDTYC[1:0] bits (up-counting).
3	Select count clock	Select the count clock with the GTCR.TPCS[3:0] bits.
4	Set cycle	Set the cycle in the GTPR register.
5	Set initial value for counter	Set the initial value in the GTCNT counter. In Figure 20.41, 0x00000000 is set.
6	Set hardware count start	Select a hardware source for starting count operation with the GTSSR register, and wait for count start by the hardware source. In Figure 20.41, GTSSR.SSELCA = 1.

Table 20.28 Example setting for simultaneous start by a hardware source (2 of 2)

No.	Step name	Description
7	Set hardware count stop	Select a hardware source for stopping count operation with the GTPSR register, and wait for count stop by the hardware source. In Figure 20.41, GTPSR.PSELCB = 1.
8	Set hardware count clear	Select a hardware source for clearing count operation with the GTCSR register, and wait for count clear by the hardware source. In Figure 20.41, GTCSR.CSELCB = 1.
9	Set hardware source operation	Set operation of the hardware source selected in the GTSSR, GTPSR, or GTCSR registers, and start, stop, or clear counting. In Figure 20.41, ELC_GPTA input and ELC_GPTB input are set.

20.3.9 PWM Output Operation Examples

(1) Synchronized PWM output

The GPT outputs 8 × 2 phases of linked PWM waveforms for a maximum of GPT × 8 channels.

Figure 20.42 shows an example in which four channels perform synchronized operation in saw-wave PWM mode and eight phases of PWM waveforms are output. The GTIOCnA is set so that it outputs low as the initial value, high at a GTCCRA compare match, and low at the cycle end. The GTIOCnB is set so that it outputs low as the initial value, high at a GTCCRB compare match, and low at the cycle end.

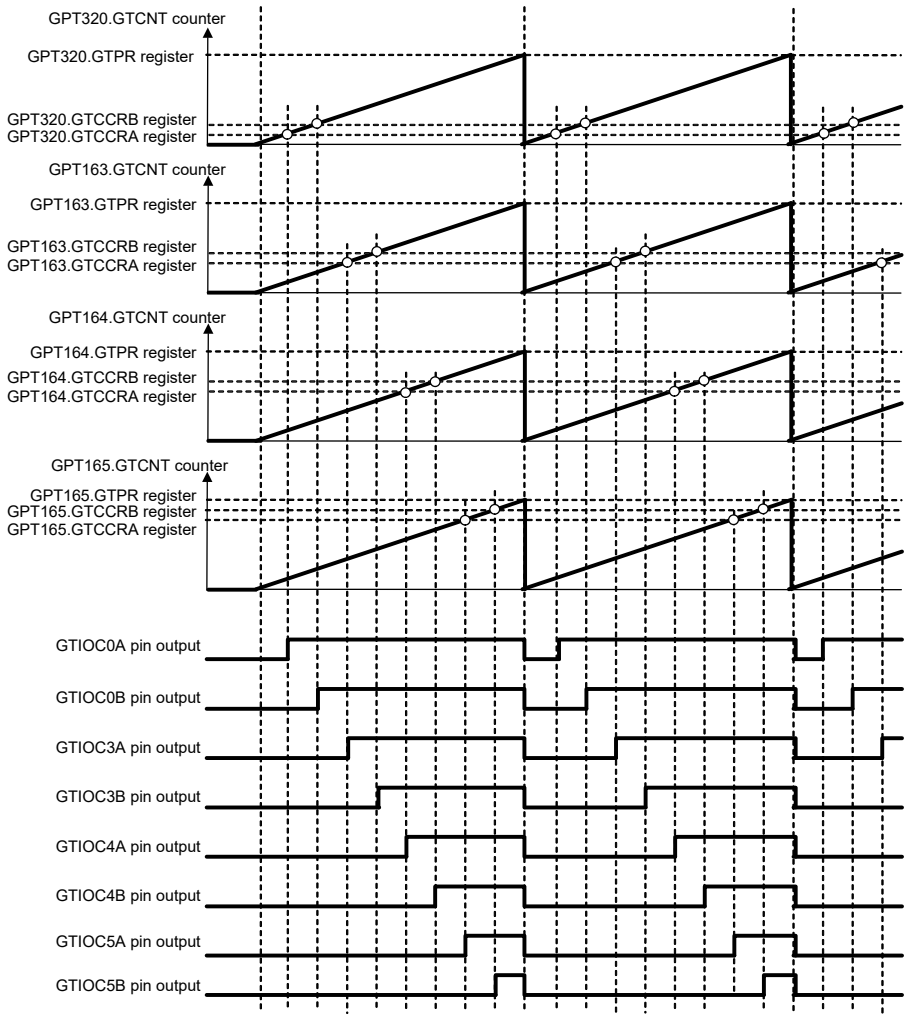

Figure 20.42 Example of synchronized PWM output

(2) 3-phase saw-wave complementary PWM output

Figure 20.43 shows an example in which three channels perform synchronized operation in saw-wave PWM mode and 3-phase complementary PWM waveforms are output. The GTIOCnA pin is set so that it outputs low as the initial value, high at a GTCCRA compare match, and low at the cycle end. The GTIOCnB pin is set so that it outputs high as the initial value, low at a GTCCRB compare match, and high at the cycle end.

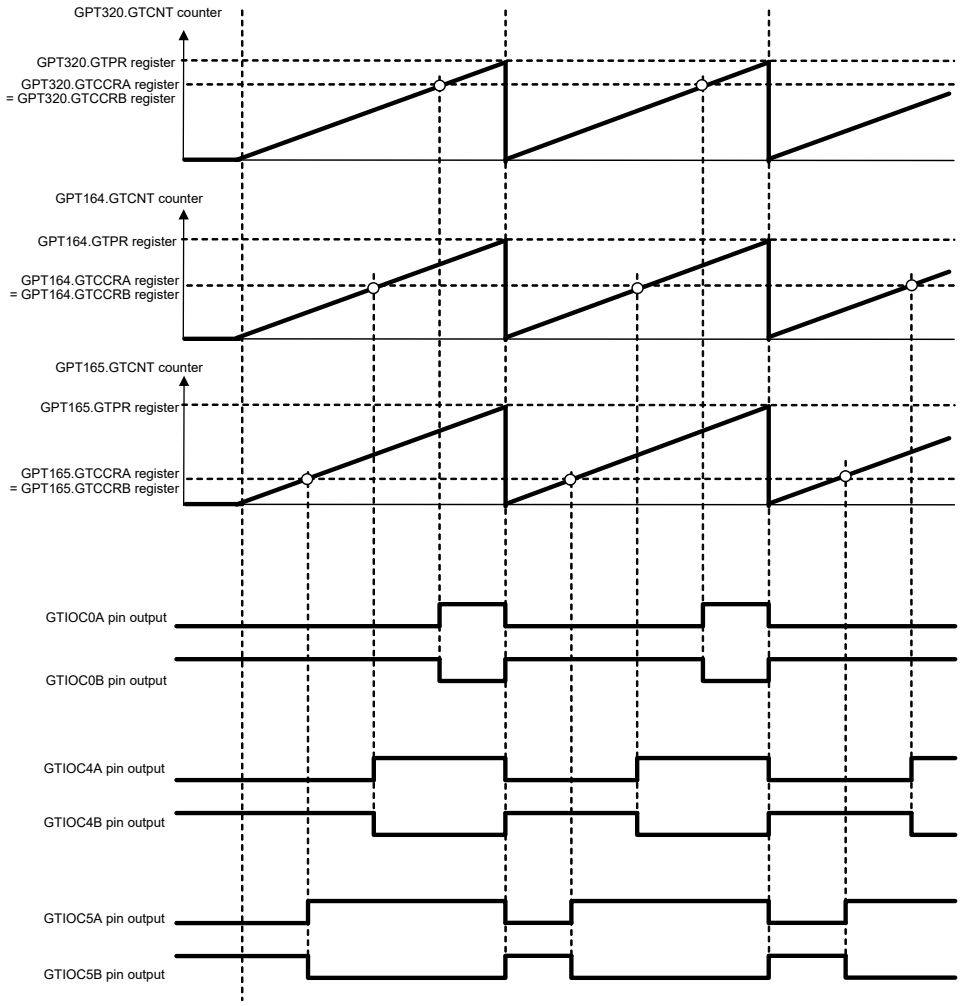

Figure 20.43 Example of 3-phase saw-wave complementary PWM output

(3) 3-phase saw-wave complementary PWM output with automatic dead time setting

Figure 20.44 shows an example in which three channels perform synchronized operation in saw-wave one-shot pulse mode with automatic dead time setting and 3-phase complementary PWM waveforms are output. The GTIOCnA pin is set so that it outputs low as the initial value, toggles the output at a GTCCRA compare match, and retains the output at the cycle end. The GTIOCnB pin is set so that it outputs high as the initial value, toggles the output at a GTIOCnB compare match, and retains the output at the cycle end.

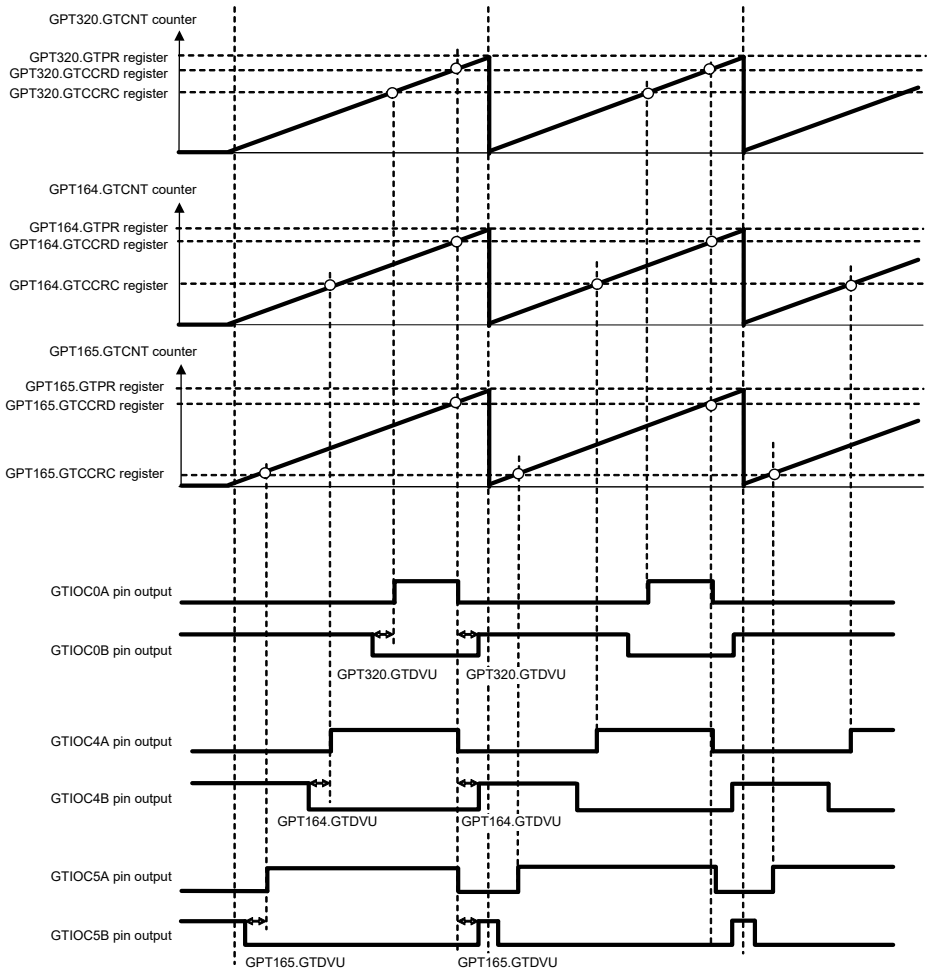

Figure 20.44 Example of 3-phase saw-wave complementary PWM output with automatic dead time setting

(4) 3-phase triangle-wave complementary PWM output

Figure 20.45 shows an example in which three channels perform synchronized operation in triangle-wave PWM mode 1 and 3-phase complementary PWM waveforms are output. The GTIOCnA pin is set so that it outputs low as the initial value, toggles the output at a GTCCRA compare match, and retains the output at the cycle end. The GTIOCnB pin is set so that it outputs high as the initial value, toggles the output at a GTCCRB compare match, and retains the output at the cycle end.

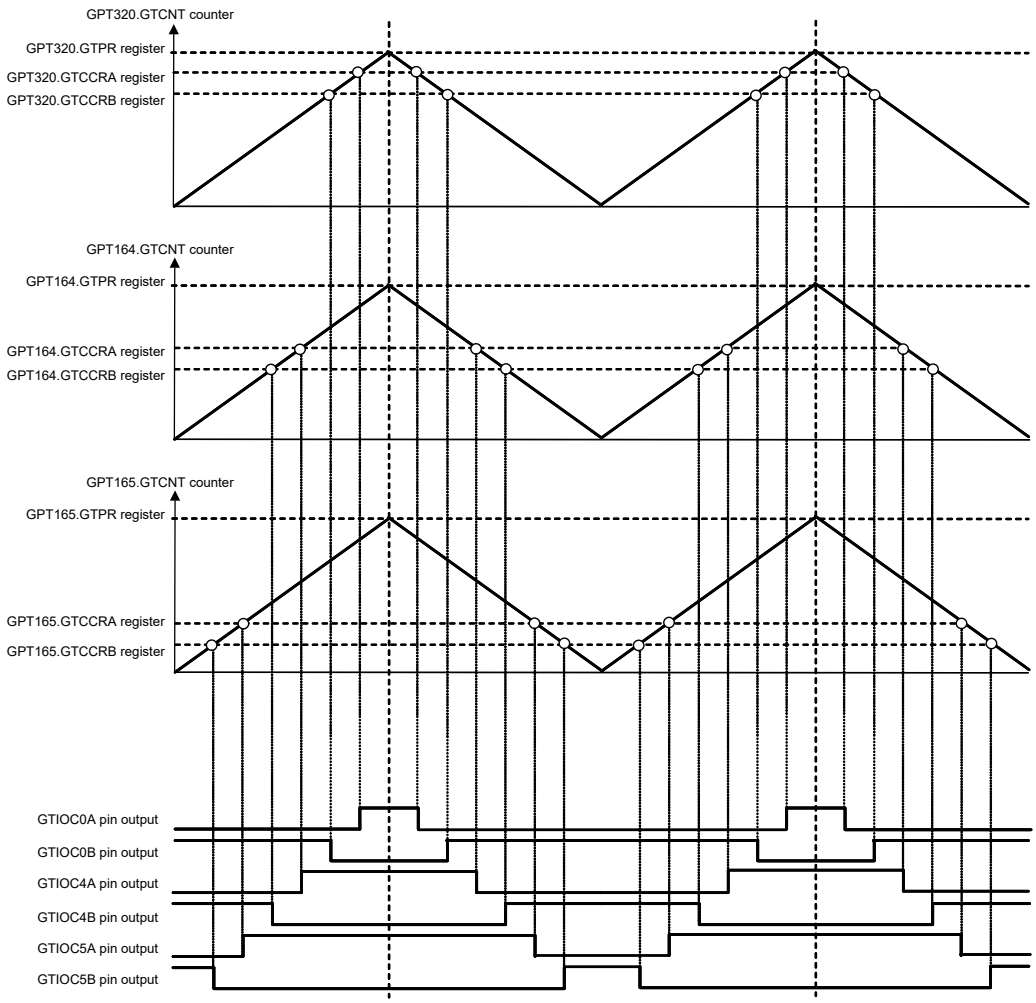

Figure 20.45 Example of 3-phase triangle-wave complementary PWM output

(5) 3-phase triangle-wave complementary PWM output with automatic dead time setting

Figure 20.46 shows an example in which three channels perform synchronized operation in triangle-wave PWM mode 1 with automatic dead time setting and 3-phase complementary PWM waveforms are output. The GTIOCnA pin is set so that it outputs low as the initial value, toggles the output at a GTCCRA compare match, and retains the output at the cycle end. The GTIOCnB pin is set so that it outputs high as the initial value, toggles the output at a GTCCRB compare match, and retains the output at the cycle end.

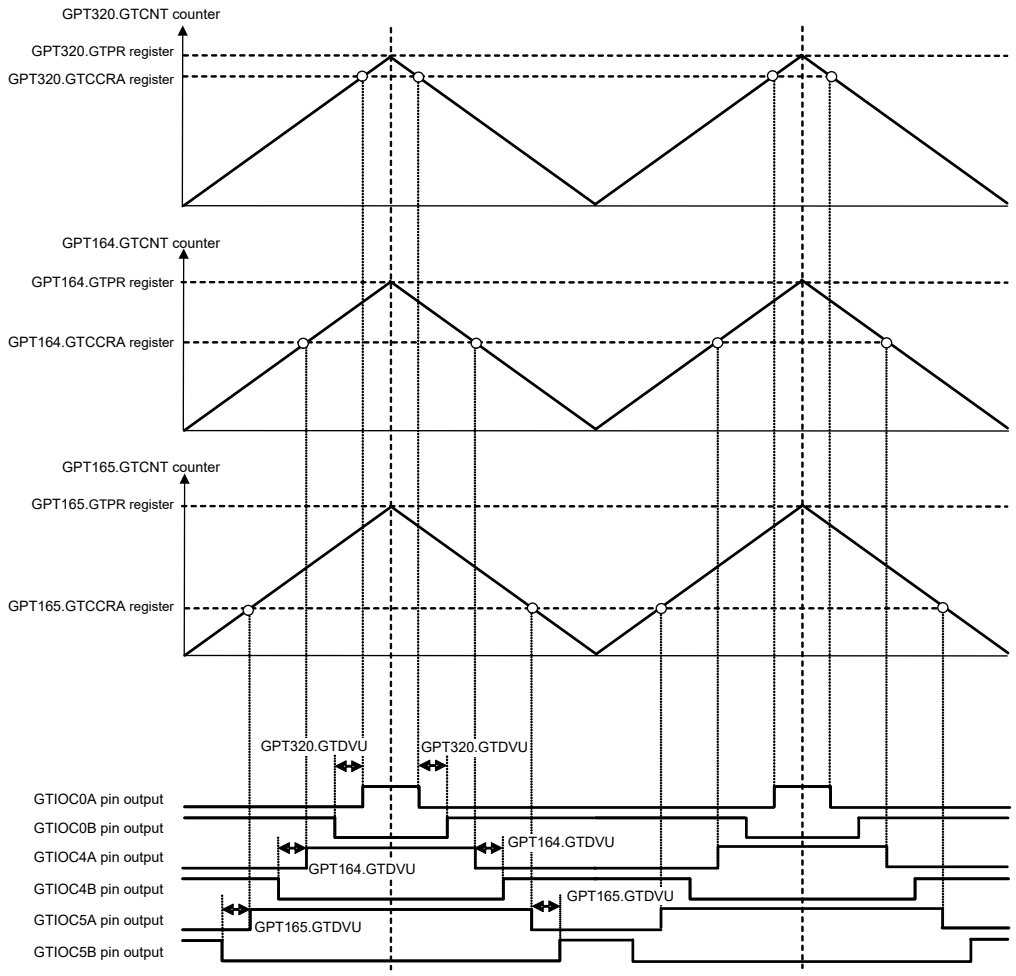

Figure 20.46 Example of 3-phase triangle-wave complementary PWM output with automatic dead time setting

(6) 3-phase asymmetric triangle-wave complementary PWM output with automatic dead time setting

Figure 20.47 shows an example in which three channels perform synchronized operation in triangle-wave PWM mode 3 with automatic dead time setting and 3-phase complementary PWM waveforms are output. The GTIOCnA is set so that it outputs low as the initial value, toggles the output at a GTCCRA compare match, and retains the output at the cycle end. The GTIOCnB is set so that it outputs high as the initial value, toggles the output at a GTCCRB compare match, and retains the output at the cycle end.

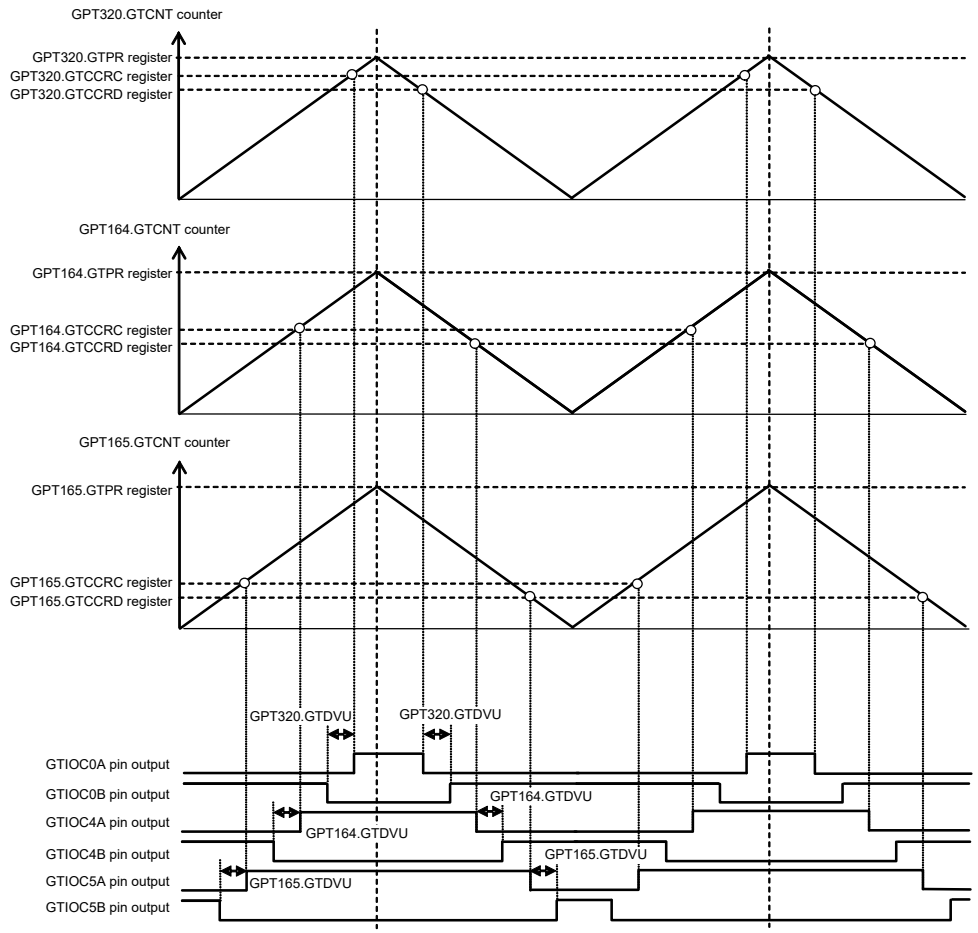

Figure 20.47 Example of 3-phase asymmetric triangle-wave complementary PWM output with automatic dead time setting

20.3.10 Period Count Function

By setting the GTPC register, the end of period can be counted.

The number of period to be counted should be set into the GTPC.PCNT counter when the GTPC.PCEN bit is 0. When the PCEN bit is 1, the PCNT counter can be read, but writing is disabled. When the PCEN bit is 1, down-counting is performed at the end of period. When the PCNT counter is 1 at the end of period, it becomes 0 and counting is stopped to finish the period count function. At that time, the GTST.PCF flag is set, and the period count function finish interrupt request GPTn_PC is generated. When the GTPC.ASTP bit is 1, the GTCNT counter is also stopped at the same time that the period count function is finished.

When the GTCNT counter is stopped while period count function is enabled, the PCNT counter keeps its value. When the GTCNT counter restarts counting and the PCEN bit is 1, the PCNT counter restarts down-counting from the hold value.

When the PCEN bit is changed from 0 to 1 while the PCNT counter is 0 and the ASTP bit is 1, the GTCNT counter is stopped at the count clock immediately after that.

When either GTSECR.SPCE bit or GTSECR.SPCD bit is set to 1, the PCEN bit in the channels set to 1 by the GTSECSR register is simultaneously set the value to enable or disable the period count function for multiple channels.

Figure 20.48 and Figure 20.49 show examples of PWM cycle count function.

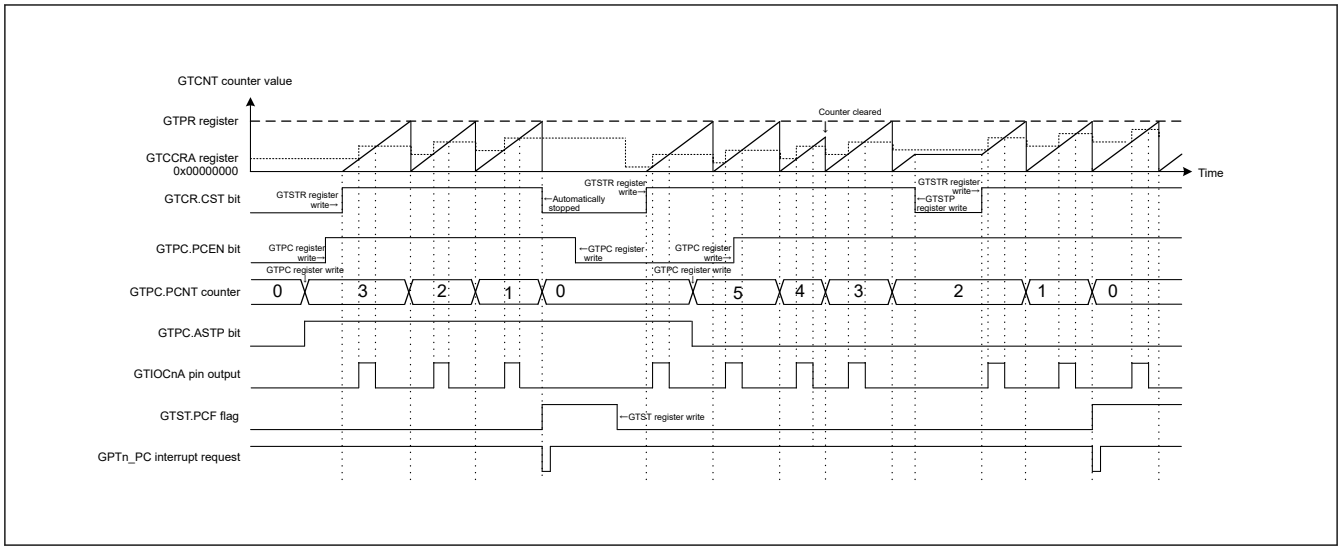

Figure 20.48 Example of PWM cycle count function (saw-wave one-shot pulse mode)

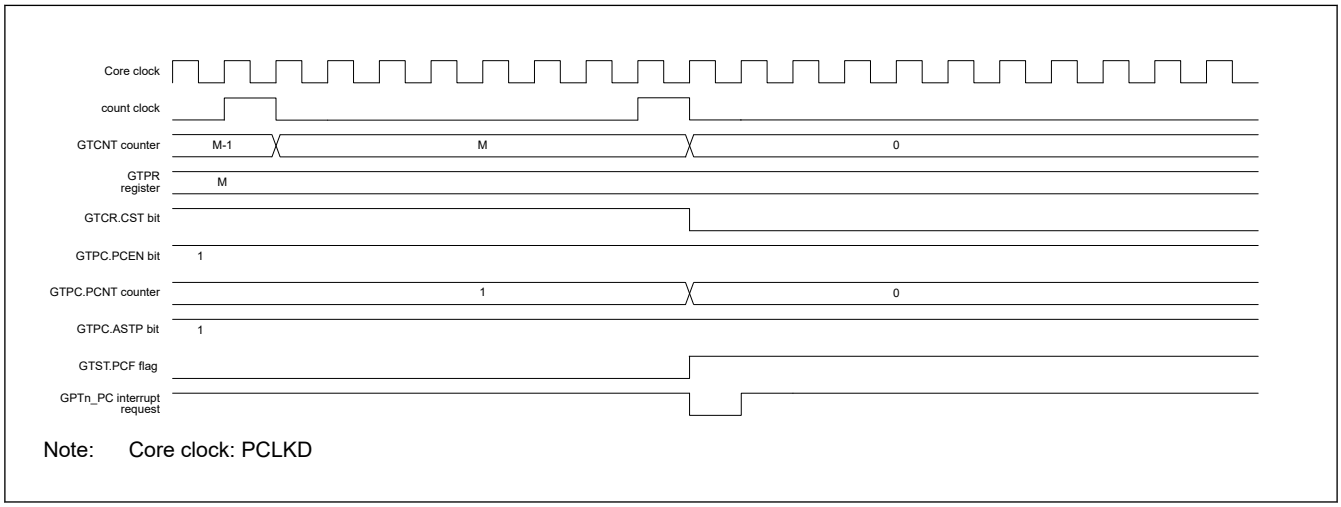

Note: Core clock: PCLKD

Figure 20.49 Example of the timing of operations for PWM cycle count function (saw-wave one-shot pulse mode, up-counting)

20.3.11 Phase Counting Function

The phase difference between the GTIOCnA and GTIOCnB pin (n = 0 to 5) inputs is detected and the associated GTCNT counts up or counts down. The detectable phase difference is available in any combination with the relationship between the edge and the level of GTIOCnA and GTIOCnB pin inputs being set in the GTUPSR and GTDNSR registers. For details on count operation, see section 20.3.1.1. Counter operation.

Figure 20.50 to Figure 20.59 show an example of phase counting modes 1 to 5 operation when the GTIOCnA, GTIOCnB pins are used. Table 20.29 to Table 20.38 show conditions of up-counting or down-counting and list settings for the GTUPSR and GTDNSR registers which is corresponding to Figure 20.50 to Figure 20.59.

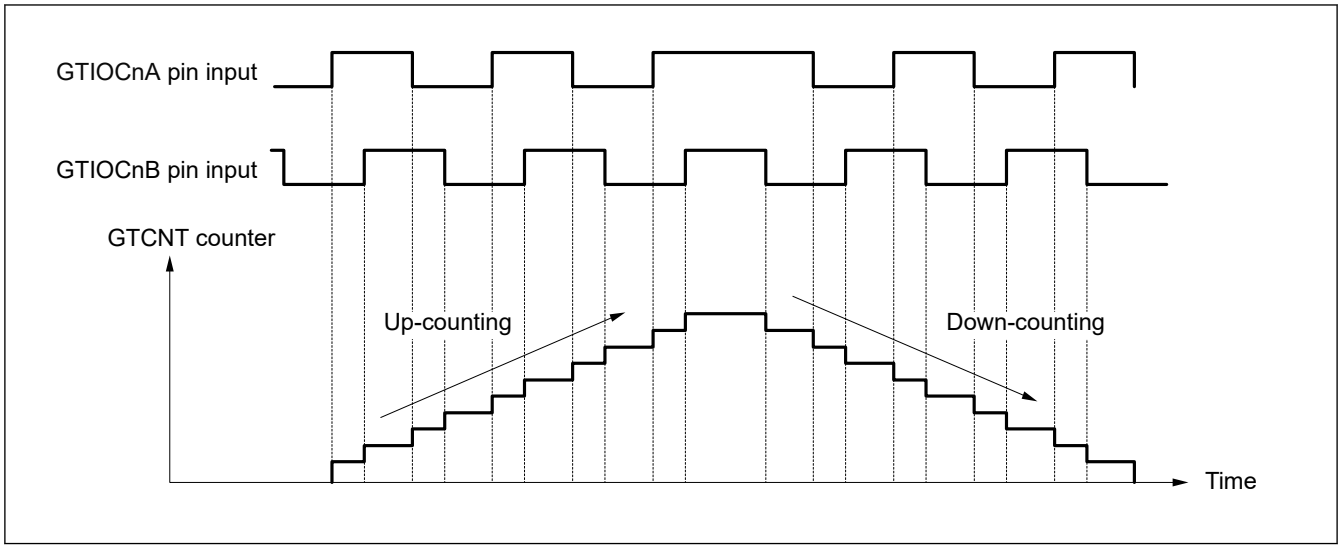

Figure 20.50 Example of phase counting mode 1

Table 20.29 Conditions of up-counting/down-counting in phase counting mode 1

↑ : Rising edge

↓ : Falling edge

GTIOCnA pin input	GTIOCnB pin input	Operation	Register setting
High	↑	Up-counting	GTUPSR = 0x00006900 GTDNSR = 0x00009600
Low	↓		
↑	Low		
↓	High		
High	↓	Down-counting	
Low	↑		
↑	High		
↓	Low		

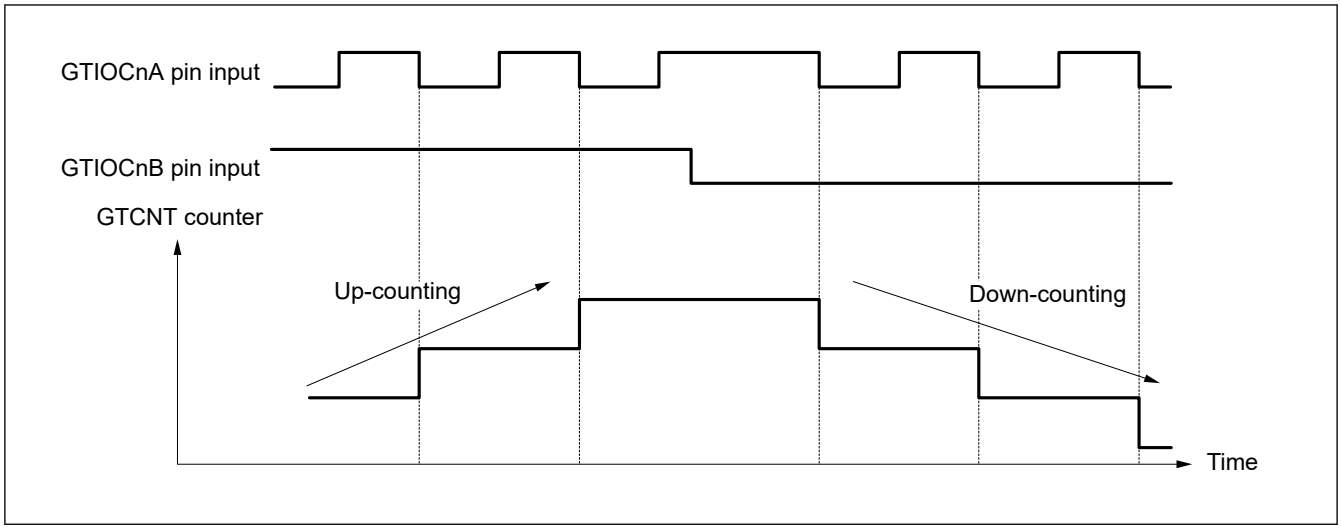

Figure 20.51 Example of phase counting mode 2 (A)

Table 20.30 Conditions of up-counting/down-counting in phase counting mode 2 (A)

↑ : Rising edge

↓ : Falling edge

GTIOCnA pin input	GTIOCnB pin input	Operation	Register setting
High	↑	Not counting	GTUPSR = 0x00000800 GTDNSR = 0x00000400
Low	↓		
↑	Low		
↓	High	Up-counting	
High	↓	Not counting	
Low	↑		
↑	High		
↓	Low	Down-counting	

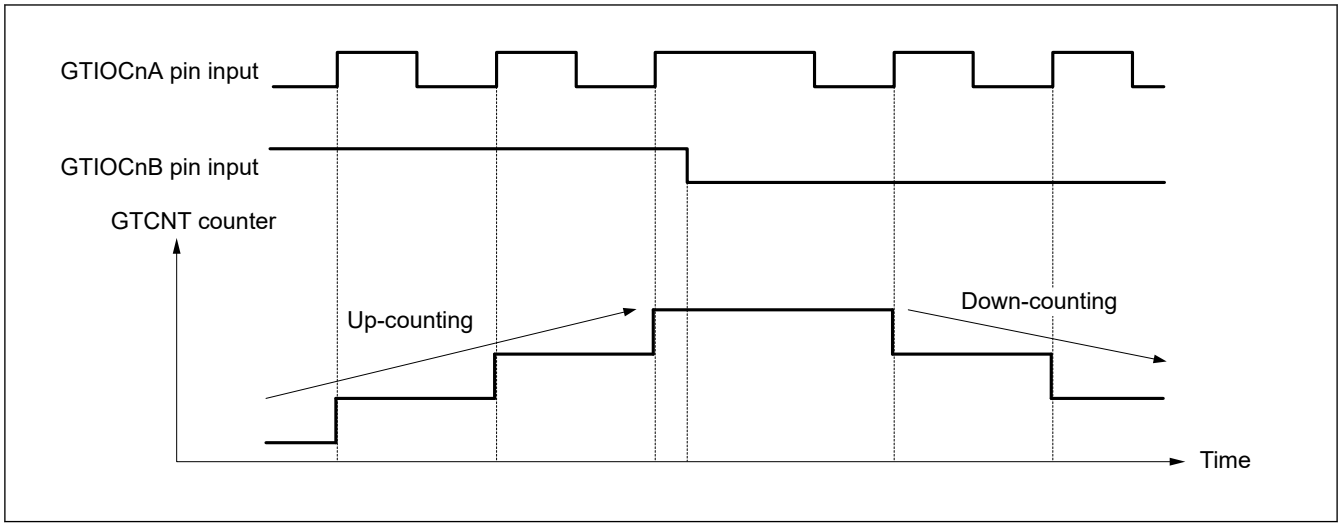

Figure 20.52 Example of phase counting mode 2 (B)

Table 20.31 Conditions of up-counting/down-counting in phase counting mode 2 (B)

↑ : Rising edge

↓ : Falling edge

GTIOCnA pin input	GTIOCnB pin input	Operation	Register setting
High	↑	Not counting	GTUPSR = 0x00000200 GTDNSR = 0x00000100
Low	↓		
↑	Low	Down-counting	
↓	High	Not counting	
High	↓		
Low	↑		
↑	High	Up-counting	
↓	Low	Not counting	

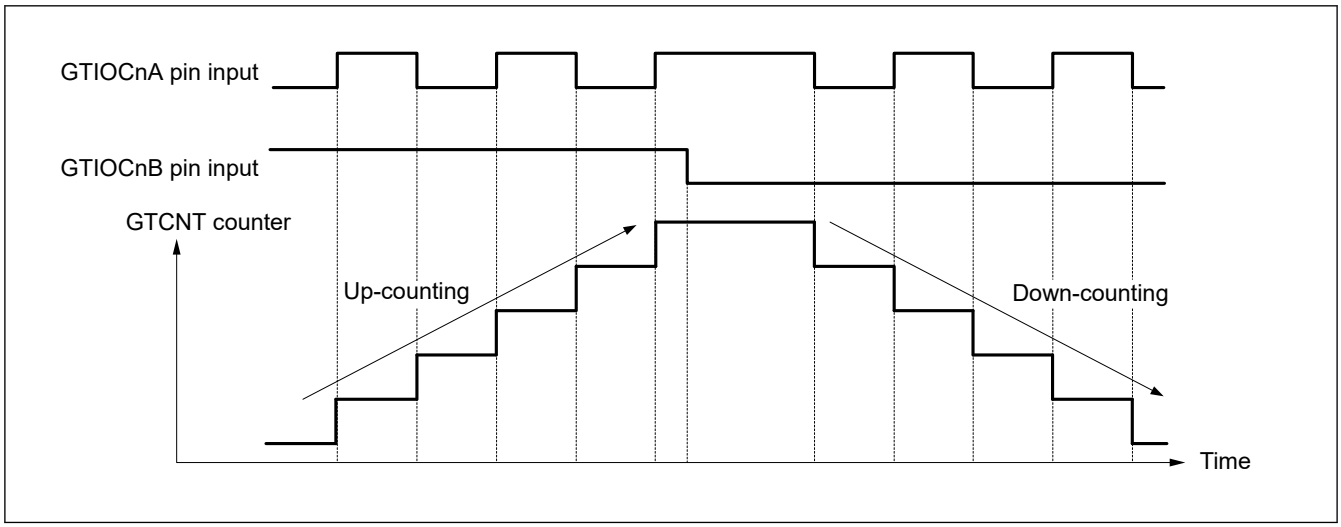

Figure 20.53 Example of phase counting mode 2 (C)

Table 20.32 Conditions of up-counting/down-counting in phase counting mode 2 (C)

↑ : Rising edge

↓ : Falling edge

GTIOCnA pin input	GTIOCnB pin input	Operation	Register setting
High	↑	Not counting	GTUPSR = 0x00000A00 GTDNSR = 0x00000500
Low	↓		
↑	Low	Down-counting	
↓	High	Up-counting	
High	↓	Not counting	
Low	↑		
↑	High	Up-counting	
↓	Low	Down-counting	

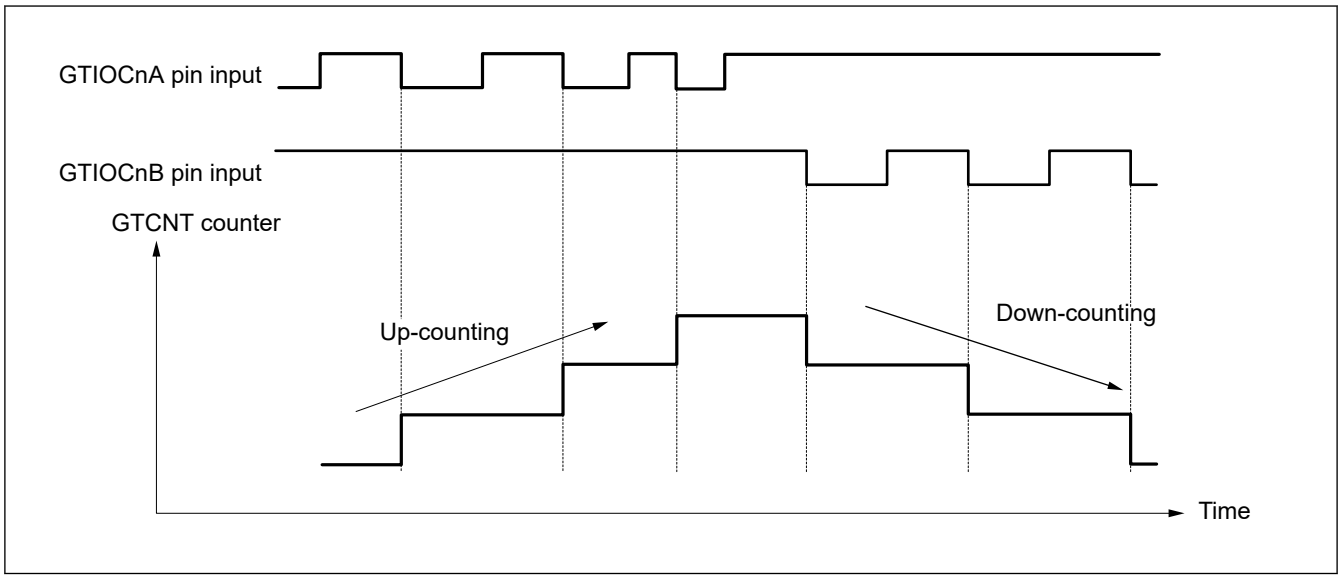

Figure 20.54 Example of phase counting mode 3 (A)

Table 20.33 Conditions of up-counting/down-counting in phase counting mode 3 (A)

↑ : Rising edge

↓ : Falling edge

GTIOCnA pin input	GTIOCnB pin input	Operation	Register setting
High	↑	Not counting	GTUPSR = 0x00000800 GTDNSR = 0x00008000
Low	↓		
↑	Low		
↓	High	Up-counting	
High	↓	Down-counting	
Low	↑	Not counting	
↑	High		
↓	Low		

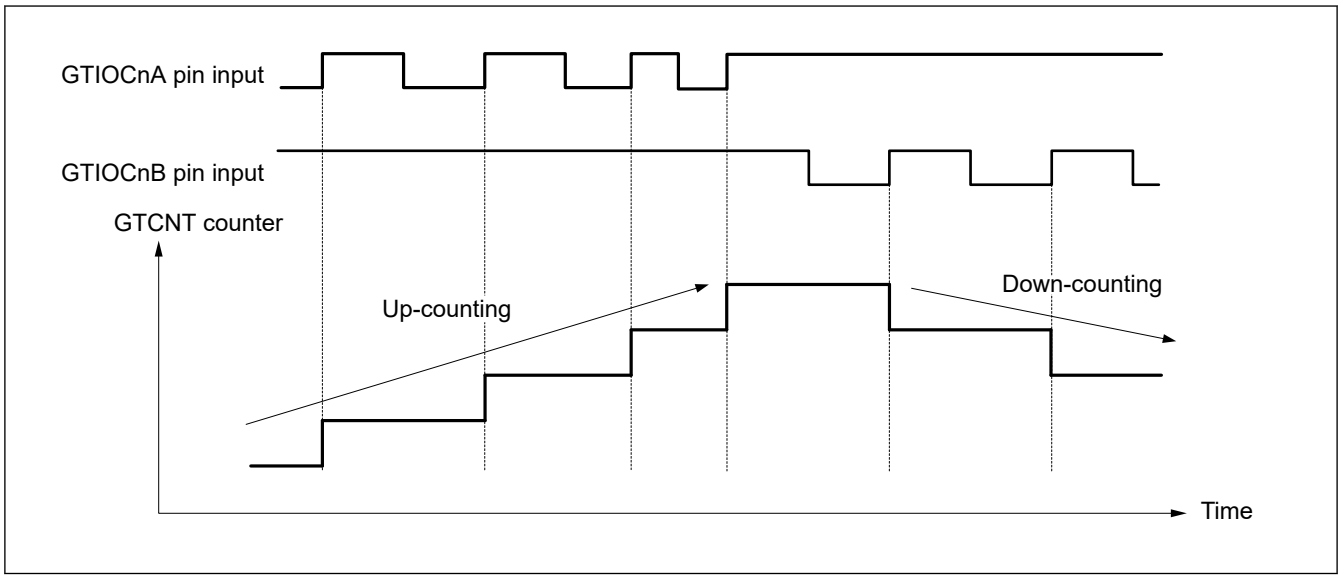

Figure 20.55 Example of phase counting mode 3 (B)

Table 20.34 Conditions of up-counting/down-counting in phase counting mode 3 (B)

↑ : Rising edge

↓ : Falling edge

GTIOCnA pin input	GTIOCnB pin input	Operation	Register setting
High	↑	Down-counting	GTUPSR = 0x00000200 GTDNSR = 0x00002000
Low	↓	Not counting	
↑	Low		
↓	High		
High	↓		
Low	↑		
↑	High	Up-counting	
↓	Low	Not counting	

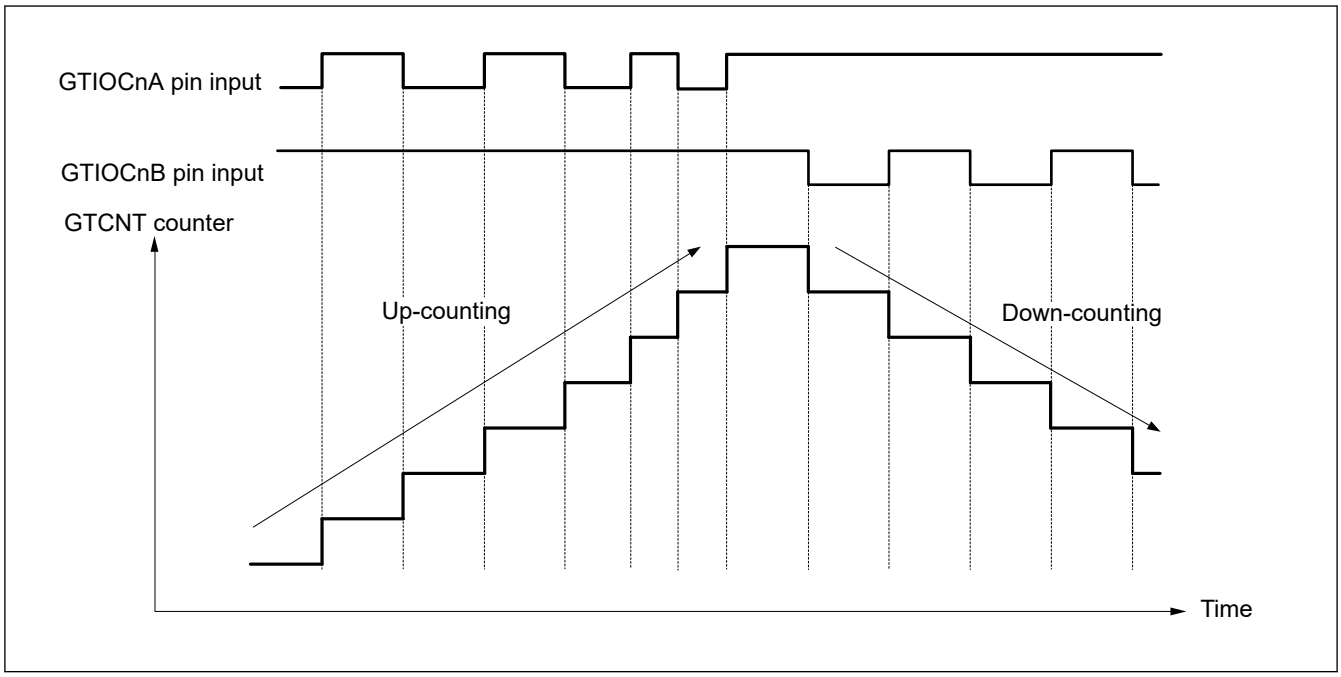

Figure 20.56 Example of phase counting mode 3 (C)

Table 20.35 Conditions of up-counting/down-counting in phase counting mode 3 (C)

↑ : Rising edge

↓ : Falling edge

GTIOCnA pin input	GTIOCnB pin input	Operation	Register setting
High	↑	Down-counting	GTUPSR = 0x00000A00 GTDNSR = 0x0000A000
Low	↓	Not counting	
↑	Low		
↓	High	Up-counting	
High	↓	Down-counting	
Low	↑	Not counting	
↑	High	Up-counting	
↓	Low	Not counting	

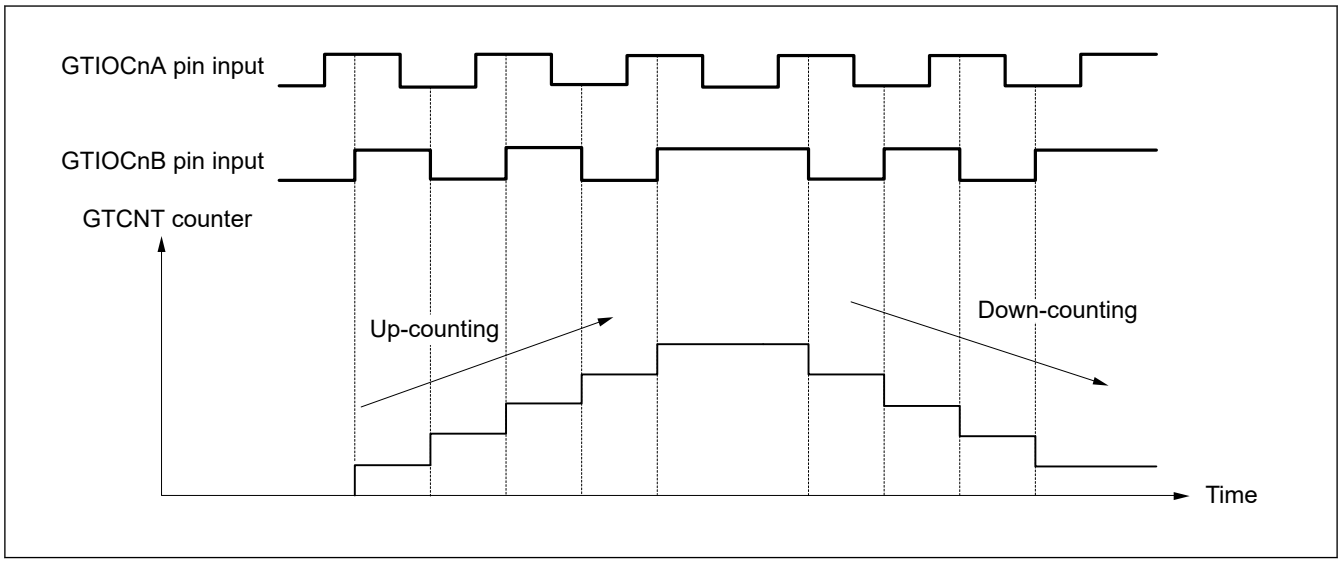

Figure 20.57 Example of phase counting mode 4

Table 20.36 Conditions of up-counting/down-counting in phase counting mode 4

↑ : Rising edge

↓ : Falling edge

GTIOCnA pin input	GTIOCnB pin input	Operation	Register setting
High	↑	Up-counting	GTUPSR = 0x00006000 GTDNSR = 0x00009000
Low	↓		
↑	Low	Not counting	
↓	High		
High	↓	Down-counting	
Low	↑		
↑	High	Not counting	
↓	Low		

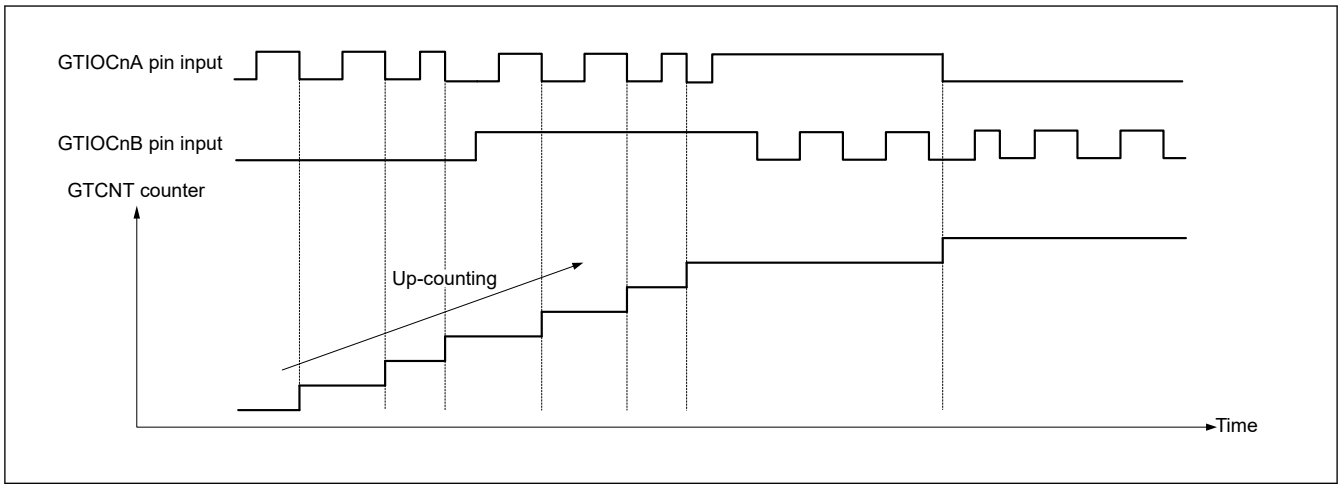

Figure 20.58 Example of phase counting mode 5 (A)

Table 20.37 Conditions of up-counting/down-counting in phase counting mode 5 (A)

↑ : Rising edge

↓ : Falling edge

GTIOCnA pin input	GTIOCnB pin input	Operation	Register setting
High	↑	Not counting	GTUPSR = 0x00000C00 GTDNSR = 0x00000000
Low	↓		
↑	Low		
↓	High	Up-counting	
High	↓	Not counting	
Low	↑		
↑	High		
↓	Low	Up-counting	

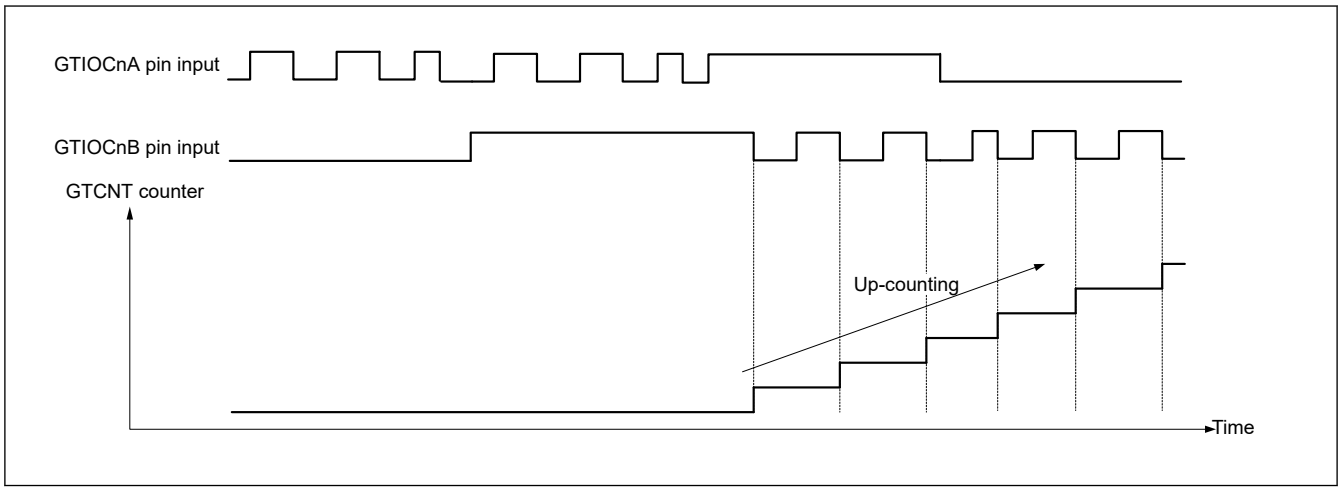

Figure 20.59 Example of phase counting mode 5 (B)

Table 20.38 Conditions of up-counting/down-counting in phase counting mode 5 (B)

↑ : Rising edge

↓ : Falling edge

GTIOCnA pin input	GTIOCnB pin input	Operation	Register setting
High	↑	Not counting	GTUPSR = 0x0000C000 GTDNSR = 0x00000000
Low	↓	Up-counting	
↑	Low	Not counting	
↓	High		
High	↓	Up-counting	
Low	↑	Not counting	
↑	High		
↓	Low		

20.3.12 Output Phase Switching (GPT_OPS)

GPT_OPS provides a function for easy control of brushless DC motor operation using the Output Phase Switching Control Register (OPSCR).

GPT_OPS outputs a PWM signal to be used for chopper control or level signal for each phase (U-positive phase/negative phase, V-positive phase/negative phase, W-positive phase/negative phase) of the 6-phase motor control. This function uses a soft setting value (OPSCR.UF, VF, WF) set by software or external signals detected by the Hall element, a PWM waveform of GPT320.GTIOC0A.

Figure 20.60 shows the conceptual diagram of GPT_OPS control flow.

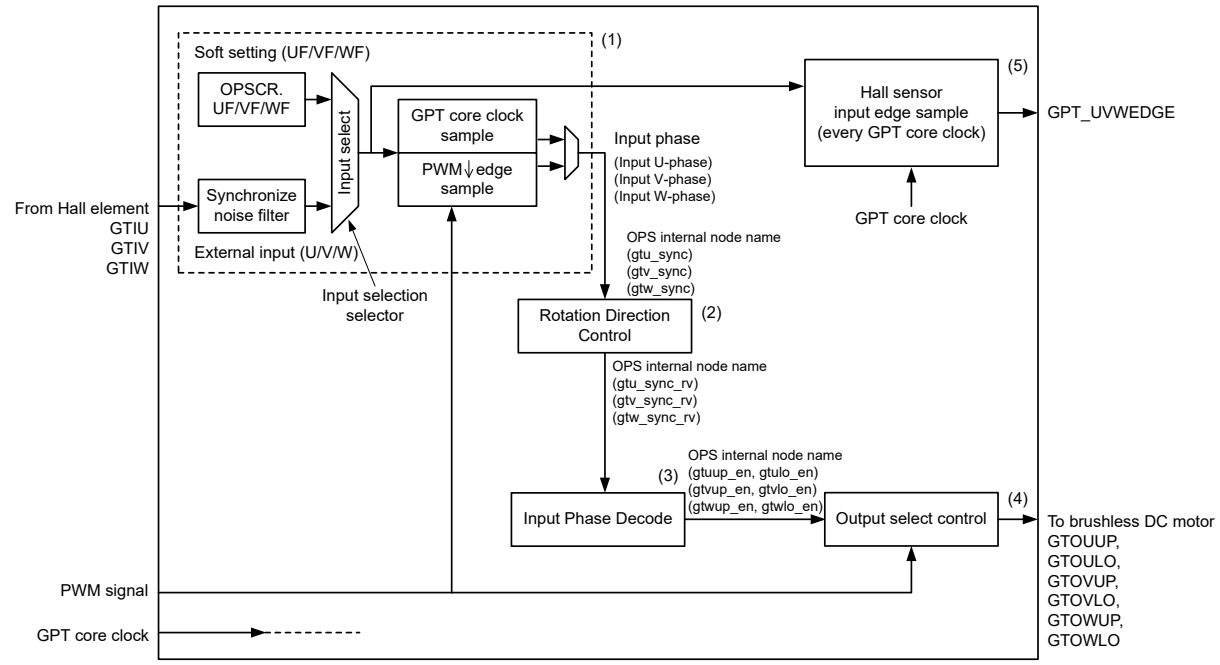

Note: GPT core clock: PCLKD
PWM signal: PWM signal from GPT320.GTIOC0A

Figure 20.60 Conceptual diagram of GPT_OPS control flow

Figure 20.61 shows a 6-phase level signals output example of a GPT_OPS operation.

The GPT_UVWEDGE signal in Figure 20.61 is the Hall sensor input edge that outputs to the ELC.

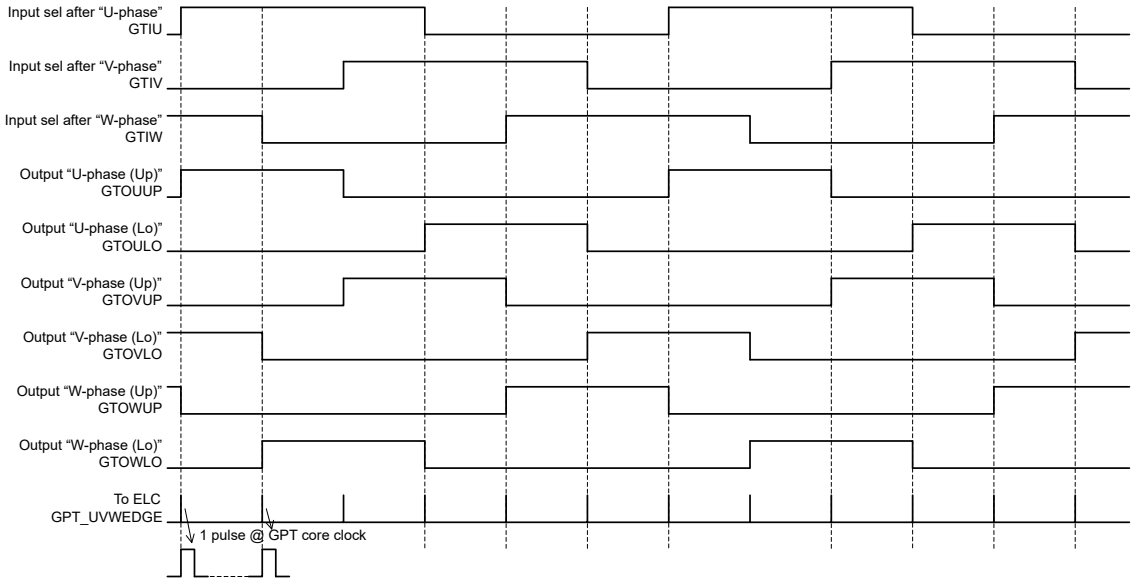

Note: Register settings : OPSCR.ALIGN = 0, OPSCR.EN = 1, OPSCR.P = 0, OPSCR.N = 0, OPSCR.INV = 0, OPSCR.RV = 0
Note: GPT core clock: PCLKD

Figure 20.61 Example of 6-phase level output operation

Figure 20.62 shows a 6-phase PWM output example of a GPT_OPS operation with chopper control.

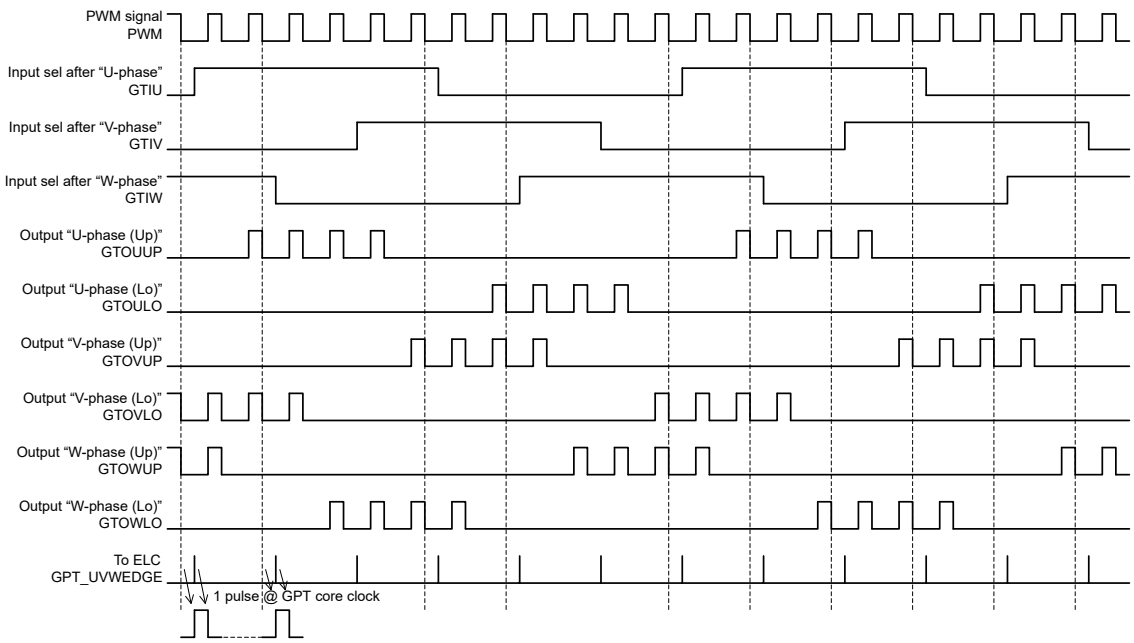

Note: Register settings : OPSCR.ALIGN = 1, OPSCR.EN = 1, OPSCR.P = 1, OPSCR.N = 1, OPSCR.INV = 0, OPSCR.RV = 0
Note: GPT core clock: PCLKD
PWM signal: PWM signal from GPT320.GTIOC0A

Figure 20.62 Example of 6-phase PWM output operation with chopper control

Figure 20.63 shows a 6-phase PWM output example of an output disable control operation.

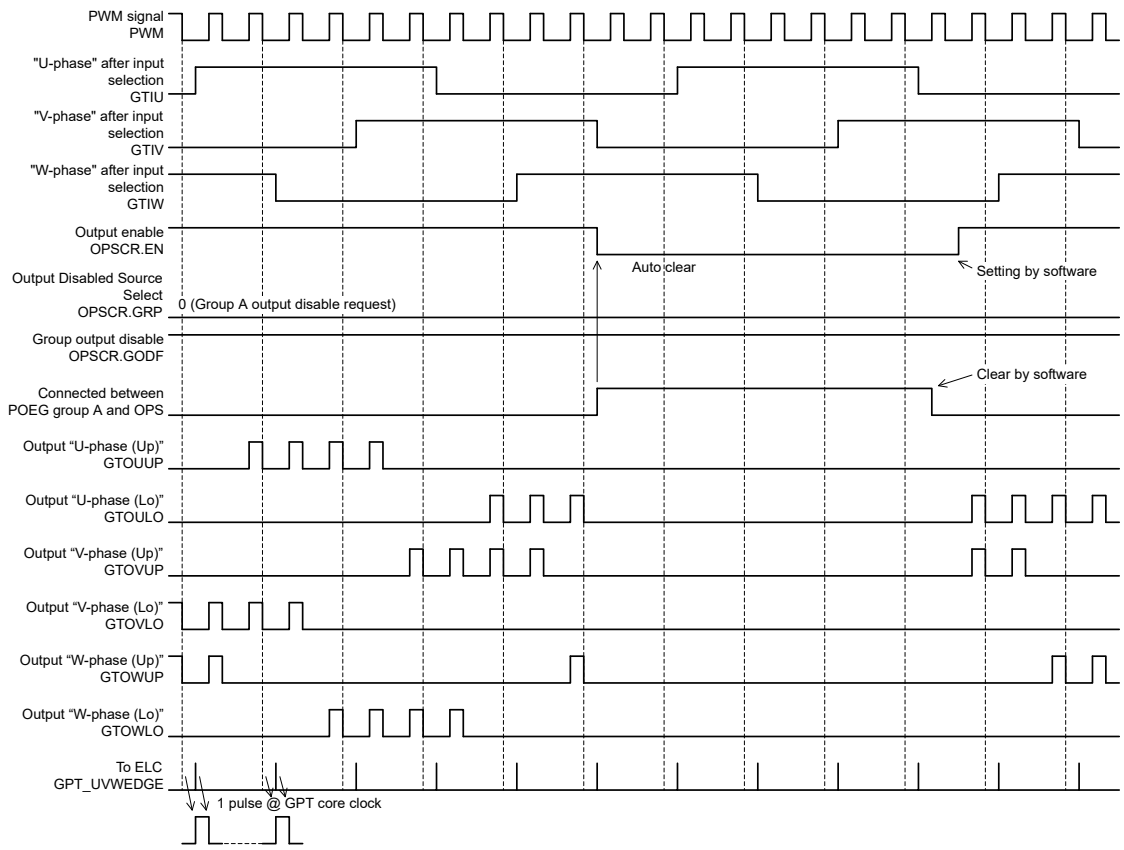

Note: Register settings : OPSCR.P = 1, OPSCR.N = 1, OPSCR.INV = 0, OPSCR.RV = 0
Note: GPT core clock: PCLKD
PWM signal: PWM signal from GPT320.GTIOC0A

Figure 20.63 Example of group output disable control operation

20.3.12.1 Input Selection and Synchronization of External Input Signal

In the GPT_OPS control flow conceptual diagram shown in Figure 20.60, (1) is a selection of input phase from the software settings and external input by the OPSCR.FB bit.

When OPSCR.FB bit is 0, select the external input. Enable the input signal after synchronization with the GPT core clock (PCLKD). After carrying out noise filtering (optional), set the external input to the input phase of PWM (PWM of GPT320.GTIOC0A) using falling edge sampling with OPSCR.ALIGN bit set to 1.

When OPSCR.FB bit is 1, select the soft setting (OPSCR.UF, VF, WF) with the value of the input phase of PWM (PWM of GPT320.GTIOC0A) using falling edge sampling with OPSCR.ALIGN bit set to 1.

When OPSCR.ALIGN bit is 0, GPT_OPS operates with the input phase of PCLKD synchronization with either OPSCR.FB bit set to 0 or OPSCR.FB bit set to 1. However, there are cases where the PWM pulse width of the output U/V/W phases (PWM output mode) of switch timing (just before/just after) is shortened.

Table 20.39 shows the input selection process and setting of associated OPSCR bits.

Table 20.39 Input selection processing method

Register OPSCR		Selection of input phase sampling method (U/V/W-phase)	Synchronization input/output selection process (GPT_OPS internal node name)
FB bit	ALIGN bit		
0	1	External Input at PWM Falling Edge Sampling (PCLKD synchronization + falling edge sample)	Input Phase Input U-Phase (gtu_sync) Input V-Phase (gtv_sync) Input W-Phase (gtw_sync)
	0	External Input at PCLKD Synchronization Output (PCLKD synchronization + through mode)	
1	1	Software Settings at PWM Falling Edge Sampling (OPSCR.UF, VF, WF of falling edge sample)	
	0	Software Setting Value Selection (= OPSCR.UF/VF/WF value) (= PCLKD synchronization)	

20.3.12.2 Input Sampling

The OPSCR.U, V, W bits indicate the PCLKD sampling results of the input selected in the OPSCR.FB bit.

When OPSCR.FB bit is 0 and after synchronization with the GPT core clock (PCLKD) and noise filtering (optional), OPSCR.U, V, W bits indicate the sampling results of the external input. When OPSCR.FB bit is 1, OPSCR.U, V, W bits are the value (OPSCR.UF, VF, WF) of the soft setting.

20.3.12.3 Input Phase Decode

In the GPT_OPS control flow conceptual diagram shown in Figure 20.60, (3) enables the 6-phase signals by decoding the input phase selected in the OPSCR.FB bit.

Table 20.40 shows the decode table of input phase when OPSCR.RV bit is 0.

Table 20.40 Decode table of input phase (OPSCR.RV = 0)

Input phase (U/V/W) (GPT_OPS internal node name)			6-phase enable {U/V/W (Up/Lo)} by decoding input phase (GPT_OPS internal node name)					
Input U-Phase	Input V-Phase	Input W-Phase	U-phase (Up)	U-phase (Lo)	V-phase (Up)	V-phase (Lo)	W-phase (Up)	W-phase (Lo)
(gtu_sync)	(gtv_sync)	(gtw_sync)	(gtuup_en)	(gtulo_en)	(gtvup_en)	(gtvlo_en)	(gtwup_en)	(gtwlo_en)
1	0	1	1	0	0	1	0	0
1	0	0	1	0	0	0	0	1
1	1	0	0	0	1	0	0	1
0	1	0	0	1	1	0	0	0
0	1	1	0	1	0	0	1	0
0	0	1	0	0	0	1	1	0
0	0	0	0	0	0	0	0	0
1	1	1	0	0	0	0	0	0

Table 20.41 Decode table of input phase (OPSCR.RV = 1) (1 of 2)

Input phase (U/V/W) (GPT_OPS internal node name)			6-phase enable {U/V/W (Up/Lo)} by decoding input phase (GPT_OPS internal node name)					
Input U-Phase	Input V-Phase	Input W-Phase	U-phase (Up)	U-phase (Lo)	V-phase (Up)	V-phase (Lo)	W-phase (Up)	W-phase (Lo)
(gtu_sync)	(gtv_sync)	(gtw_sync)	(gtuup_en)	(gtulo_en)	(gtvup_en)	(gtvlo_en)	(gtwup_en)	(gtwlo_en)
1	0	1	0	1	1	0	0	0
1	0	0	0	1	0	0	1	0
1	1	0	0	0	0	1	1	0
0	1	0	1	0	0	1	0	0

Table 20.41 Decode table of input phase (OPSCR.RV = 1) (2 of 2)

Input phase (U/V/W) (GPT_OPS internal node name)			6-phase enable {U/V/W (Up/Lo)} by decoding input phase (GPT_OPS internal node name)					
Input U-Phase	Input V-Phase	Input W-Phase	U-phase (Up)	U-phase (Lo)	V-phase (Up)	V-phase (Lo)	W-phase (Up)	W-phase (Lo)
(gtu_sync)	(gtv_sync)	(gtw_sync)	(gtuup_en)	(gtulo_en)	(gtvup_en)	(gtvlo_en)	(gtwup_en)	(gtwlo_en)
0	1	1	1	0	0	0	0	1
0	0	1	0	0	1	0	0	1
0	0	0	0	0	0	0	0	0
1	1	1	0	0	0	0	0	0

20.3.12.4 Rotation Direction Control

In the GPT_OPS control flow conceptual diagram shown in Figure 20.60, (2) controls the direction of rotation of a 3-phase motor using the OPSCR.RV bit.

When the rotation direction is reverse (RV bit = 1), the input phase is inverted.

Table 20.42 shows the assigned output phases based on the OPSCR.RV bit setting (before and after rotation direction control).

Table 20.42 Rotation Direction Control Method

Reversal of Direction of Rotation Using Output Phases as Specified in OPSCR Register	Output of Rotation Direction Control [U/V/W (Positive/Negative)] (GPT_OPS Internal Node Name after Control)					
OPSCR.RV bit	(gtuup_ren)	(gtulo_ren)	(gtvup_ren)	(gtvlo_ren)	(gtwup_ren)	(gtwlo_ren)
0	U-phase (Up) (gtuup_en)	U-phase (Lo) (gtulo_en)	V-phase (Up) (gtvup_en)	V-phase (Lo) (gtvlo_en)	W-phase (Up) (gtwup_en)	W-phase (Lo) (gtwlo_en)
1	U-phase (Up) (gtuup_en)	U-phase (Lo) (gtulo_en)	W-phase (Up) (gtwup_en)	W-phase (Lo) (gtwlo_en)	V-phase (Up) (gtvup_en)	V-phase (Lo) (gtvlo_en)

20.3.12.5 Output Selection Control

In the GPT_OPS control flow conceptual diagram in Figure 20.60, (4) represents the selection of the output waveform by setting the OPSCR register bit.

For output selection, the following bits are relevant:

- The OPSCR.EN bit controls whether to output the 6-phase output, or to stop
- The OPSCR.P and OPSCR.N bits can select from the level signal or PWM signal (chopper output) for the output phase
- The polarity of the output phase can be set to a positive logic or negative logic by the OPSCR. INV bit.

Table 20.43 and Table 20.44 show the output selection control method using the OPSCR register bit.

Table 20.43 Output selection control method (positive phase) (1 of 2)

Enable-phase output control	Positive-phase output (P) control	Invert-phase output control	Output port name (positive phase = up) (output selection internal node allocation)	
OPSCR.EN	OPSCR.P	OPSCR.INV	GTOUUP GTOVUP GTOWUP	Mode
0	x	x	0	Output Stop (External pin: Hi-Z) GPT_OPS → 0 output

Table 20.43 Output selection control method (positive phase) (2 of 2)

Enable-phase output control	Positive-phase output (P) control	Invert-phase output control	Output port name (positive phase = up) (output selection internal node allocation)	
OPSCR.EN	**OPSCR.P**	**OPSCR.INV**	**GTOUUP GTOVUP GTOWUP**	**Mode**
1	0	0	Level signal (gtuup_ren) (gtvup_ren) (gtwup_ren)	Level Output Mode (Positive phase) (Positive logic)
1	0	1	Level signal (~gtuup_ren) (~gtvup_ren) (~gtwup_ren)	Level Output Mode (Positive phase) (Negative logic)
1	1	0	PWM signal (PWM & gtuup_ren) (PWM & gtvup_ren) (PWM & gtwup_ren)	PWM Output Mode (Positive phase) (Positive logic)
1	1	1	PWM signal (~(PWM & gtuup_ren)) (~(PWM & gtvup_ren)) (~(PWM & gtwup_ren))	PWM Output Mode (Positive phase) (Negative logic)

Table 20.44 Output selection control method (negative phase)

Enable-phase output control	Positive-phase output (N) control	Invert-phase output control	Output port name (negative phase = Lo) (output selection internal node allocation)	
OPSCR.EN	**OPSCR.N**	**OPSCR.INV**	**GTOULO GTOVLO GTOWLO**	**Mode**
0	x	x	0	Output Stop (External pin: Hi-Z) GPT_OPS → 0 output
1	0	0	Level signal (gtulo_ren) (gtvlo_ren) (gtwlo_ren)	Level Output Mode (Negative phase) (Positive logic)
1	0	1	Level signal (~gtulo_ren) (~gtvlo_ren) (~gtwlo_ren)	Level Output Mode (Negative phase) (Negative logic)
1	1	0	PWM signal (PWM & gtulo_ren) (PWM & gtvlo_ren) (PWM & gtwlo_ren)	PWM Output Mode (Negative phase) (Positive logic)
1	1	1	PWM signal (~(PWM & gtulo_ren)) (~(PWM & gtvlo_ren)) (~(PWM & gtwlo_ren))	PWM Output Mode (Negative phase) (Negative logic)

20.3.12.6 Output Selection Control (Group Output Disable Function)

When OPSCR.GODF is 1 and the signal value selected by the OPSCR.GRP bit is high (output disable request), the group output-disable function asynchronously sets the output to Hi-Z. When an output-disable request is generated, the OPSCR.EN bit is cleared to 0. For the return, set the OPSCR.EN bit to 1 after clearing the output disable request by software.

To ensure output-disable control, use the POEG_GROUPn (n = A to D) interrupt to clear the flag in the POE or check that the OPSCR.EN bit is 0 and then clear the flag. For an example of the operation for group output disable control, see Figure 20.63.

20.3.12.7 Event Link Controller (ELC) Output

In the GPT_OPS control flow conceptual diagram shown in Figure 20.60, (5) outputs the Hall sensor input signal edge to the ELC.

The Hall sensor input edge signal is the logical OR of the rising and falling edge signals of each U-phase/V-phase/W-phase input sampled at PCLKD. That is, if the high period of each of the U-phase/V-phase/W-phase of the input phase is short in duration, the Hall sensor edge input signal is not output at that time.

When the OPSCR.FB bit is 0, the Hall sensor input edge signal is the logical OR of the edge signals of the external input phase sampled at PCLKD.

When OPSCR.FB bit is 1, the Hall sensor input edge signal is the logical OR of the edge of the soft setting (OPSCR.UF, VF, WF) sampled at PCLKD.

See Figure 20.61 to Figure 20.63 for examples of the output signal to the ELC.

20.3.12.8 GPT_OPS Start Operation Setting Flow

Table 20.45 Example setting of GPT_OPS start operation

No.	Step Name	Description
1	GPT320 operation mode setting	GPT320.GTIOC0A set the PWM output operation mode of the saw-wave or triangle-wave. For details, see section 20.3.3. PWM Output Operating Mode.
2	Counting of GPT320	Start the count operation of GPT320, and outputs a PWM waveform.
3	GPT_OPS input data set (only software setting is selected)	Set software setting to OPSCR.UF, VF, and WF bits.
4	Noise filter settings of GPT_OPS external input (only external input is selected)	When using a noise filter, set the sampling clock of the noise filter by OPSCR.NFCS[1:0] bits. Then the noise filter is enabled if OPSCR.NFEN = 1.
5	GPT_OPS input phase selection setting/input phase alignment setting	Select the input phase from the external input or software setting by OPSCR.FB bit. Select the alignment of the input phase by OPSCR.ALIGN bit.
6	Setting the GPT_OPS output phase	Set the level output/PWM output of the positive/negative phase output by OPSCR.P/OPSCR.N bit. Set the positive logic/negative logic of the output phase by OPSCR.INV bit. Set the rotation direction by OPSCR.RV bit
7	GPT_OPS setting the group output disable function	Set the selection of output disable source by OPSCR.GRP bit. Perform the setting of on/off of the group output disable function by OPSCR.GODF bit.
8	GPT_OPS Working	Setting the OPSCR.EN = 1 outputs the 6-phase output to drive the brushless DC motor from the GPT_OPS.

20.3.13 Inter Channel Logical Operation Function

The logical operation function between compare match outputs can be performed.

Figure 20.64 shows the block diagram of inter channel logical operation.

To prevent hazard to the GPT output, the signal after logical operation is latched with PCLKD. After latching, the output disable control is performed.

When the logical operation function which causes the delay of 1 PCLKD is selected, the output enable signal is also delayed with 1 PCLKD and input to the output disable control.

When the same signal (C = A or D = B) to operate logical function AND, OR, EXOR and NOR is selected, C or D is treated as 1. In the case of GTIOCnA pin output, when A of same channel is selected for C, the result of AND is A, the result of OR is 1, the result of EXOR is NOT A, and the result of NOR is 0.

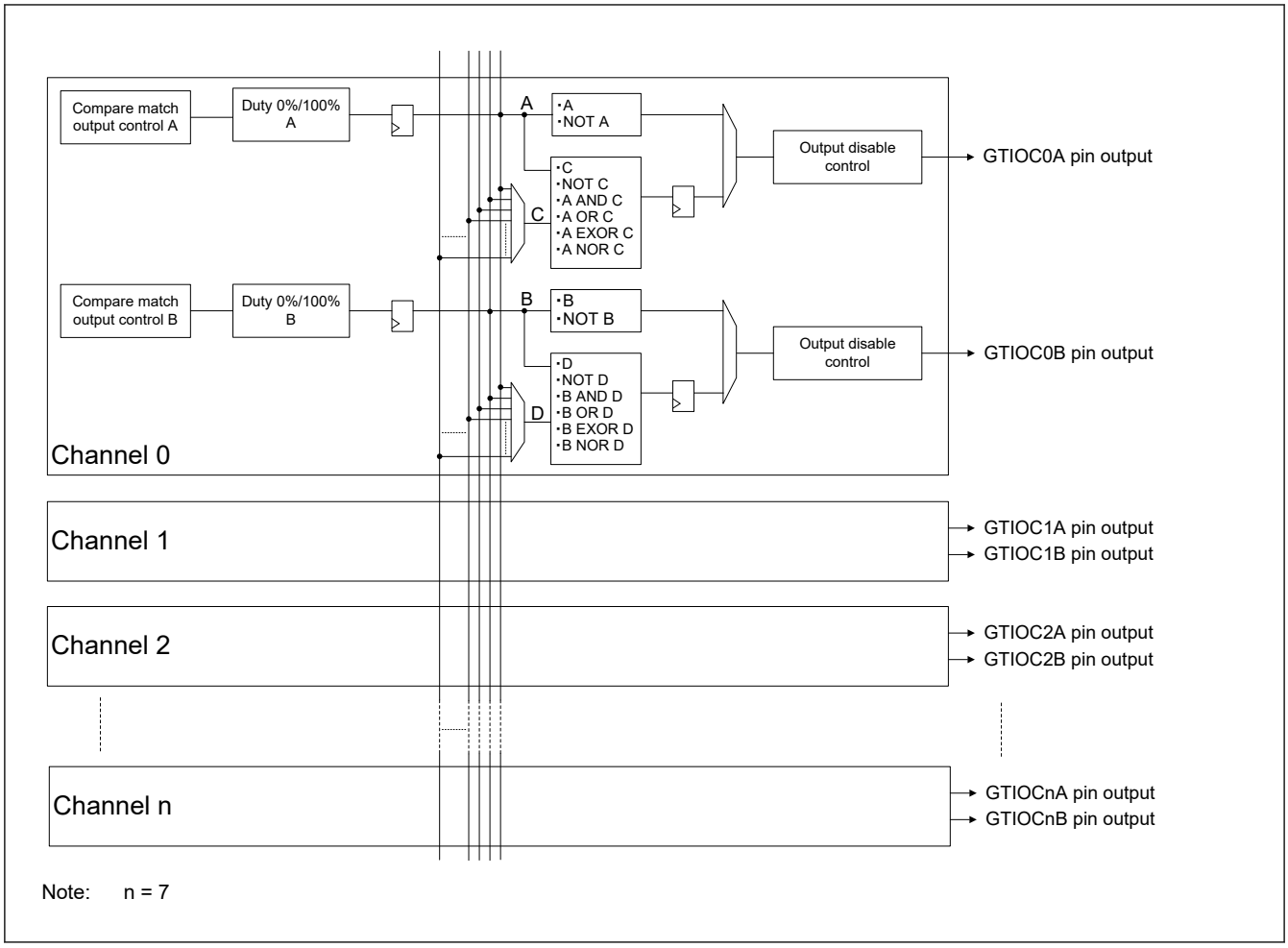

Figure 20.64 Block diagram of inter channel logical operation

Figure 20.65 shows an example of inter channel logical operation.

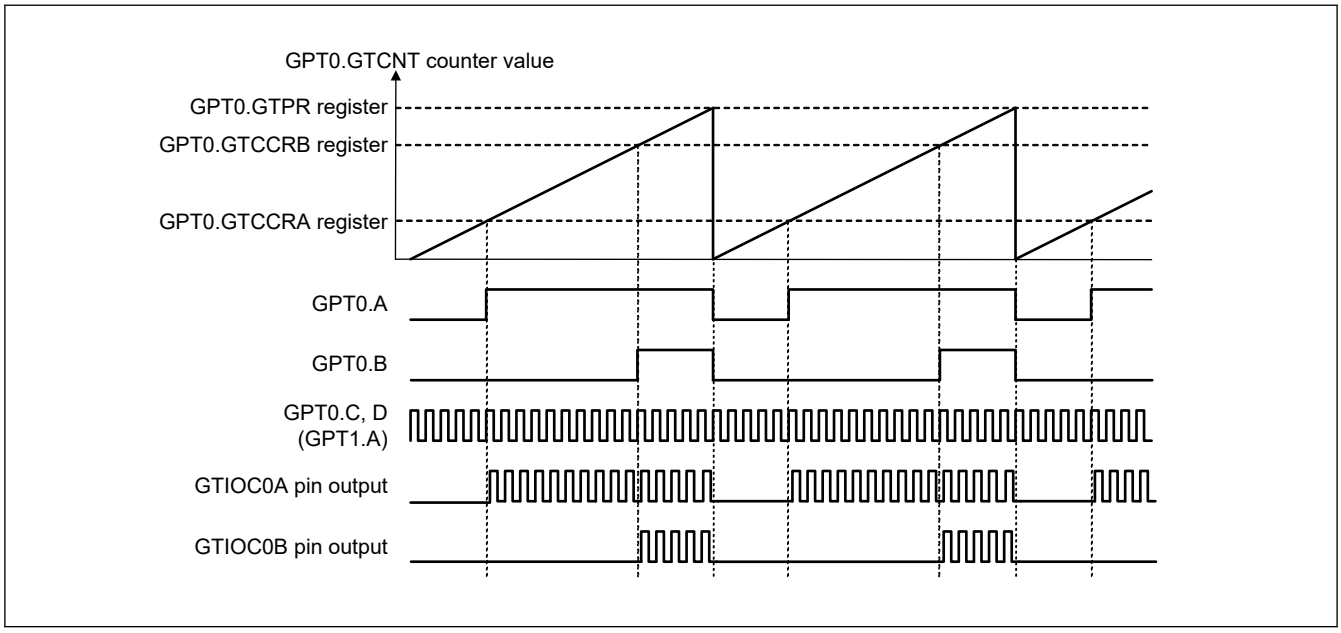

Figure 20.65 Example of inter channel logical operation

20.4 Interrupt Sources

20.4.1 Interrupt Sources

The GPT provides the following interrupt sources:

- GTCCR input capture/compare match
- GTCNT counter overflow (GTPR compare match)/underflow
- Period count function finish

Each interrupt source has its own status flag. When an interrupt source signal is generated, the associated status flag in GTST is set to 1. The associated status flag in GTST can be cleared by writing 0. If flag set and flag clear occur at the same time, flag clear takes priority over flag set. These flags are automatically updated by the internal state. The Interrupt Controller Unit can change the relative channel priorities. However, the priority within a channel is fixed. For details, see section 12, Interrupt Controller Unit (ICU).

Table 20.46 lists the GPT interrupt sources.

Table 20.46 Interrupt sources

Channel	Name	Interrupt source	Interrupt flag	DTC activation
n = 0, 1	GPTn_CCMPA	GPT32n.GTCCRA input capture/compare match	GTST[0] (TCFA)	Possible
	GPTn_CCMPB	GPT32n.GTCCRB input capture/compare match	GTST[1] (TCFB)	Possible
	GPTn_CMPC	GPT32n.GTCCRC compare match	GTST[2] (TCFC)	Possible
	GPTn_CMPD	GPT32n.GTCCRD compare match	GTST[3] (TCFD)	Possible
	GPTn_CMPE	GPT32n.GTCCRE compare match	GTST[4] (TCFE)	Possible
	GPTn_CMPF	GPT32n.GTCCRF compare match	GTST[5] (TCFF)	Possible
	GPTn_OVF	GPT32n.GTCNT overflow (GPT32n.GTPR compare match)	GTST[6] (TCFPO)	Possible
	GPTn_UDF	GPT32n.GTCNT underflow	GTST[7] (TCFPU)	Possible
	GPTn_PC	Period count function finish (n = 0, 1)	GTST[31] (PCF)	Possible
n = 2 to 5	GPTn_CCMPA	GPT16n.GTCCRA input capture/compare match	GTST[0] (TCFA)	Possible
	GPTn_CCMPB	GPT16n.GTCCRB input capture/compare match	GTST[1] (TCFB)	Possible
	GPTn_CMPC	GPT16n.GTCCRC compare match	GTST[2] (TCFC)	Possible
	GPTn_CMPD	GPT16n.GTCCRD compare match	GTST[3] (TCFD)	Possible
	GPTn_CMPE	GPT16n.GTCCRE compare match	GTST[4] (TCFE)	Possible
	GPTn_CMPF	GPT16n.GTCCRF compare match	GTST[5] (TCFF)	Possible
	GPTn_OVF	GPT16n.GTCNT overflow (GPT16n.GTPR compare match)	GTST[6] (TCFPO)	Possible
	GPTn_UDF	GPT16n.GTCNT underflow	GTST[7] (TCFPU)	Possible
	GPTn_PC	Period count function finish (n = 2 to 4)	GTST[31] (PCF)	Possible

(1) GPTn_CCMPA interrupt (n = 0 to 5)

An interrupt request is generated under the following conditions:

- When the GTCCRA register functions as a compare match register, the GTCNT counter value matches with the GTCCRA register
- When the GTCCRA register functions as an input capture register, the input-capture signal causes transfer of the GTCNT counter value to the GTCCRA register.

(2) GPTn_CCMPB interrupt (n = 0 to 5)

An interrupt request is generated under the following conditions:

- When the GTCCRB register functions as a compare match register, the GTCNT counter value matches with the GTCCRB register

- When the GTCCRB register functions as an input capture register, the input-capture signal causes transfer of the GTCNT counter value to the GTCCRB register.

(3) GPTn_CMPC interrupt (n = 0 to 5)

An interrupt request is generated under the following condition:

- When the GTCCRC register functions as a compare match register, the GTCNT counter value matches with the GTCCRC register.

A compare match is not performed and therefore, an interrupt is not requested in the following conditions:

- GTCR.MD[2:0] = 001b (saw-wave one-shot pulse mode)
- GTCR.MD[2:0] = 110b (triangle-wave PWM mode 3)
- GTBER.CCRA[1:0] = 01b, 10b, 11b (buffer operation with the GTCCRC register).

(4) GPTn_CMPD interrupt (n = 0 to 5)

An interrupt request is generated under the following condition:

- When the GTCCRD register functions as a compare match register, the GTCNT counter value matches with the GTCCRD register.

A compare match is not performed and therefore, an interrupt is not requested in the following conditions:

- GTCR.MD[2:0] = 001b (saw-wave one-shot pulse mode)
- GTCR.MD[2:0] = 110b (triangle-wave PWM mode 3)
- GTBER.CCRA[1:0] = 10b, 11b (buffer operation with the GTCCRD register).

(5) GPTn_CMPE interrupt (n = 0 to 5)

An interrupt request is generated under the following condition:

- When the GTCCRE register functions as a compare match register, the GTCNT counter value matches with the GTCCRE register.

A compare match is not performed and therefore, an interrupt is not requested in the following conditions:

- GTCR.MD[2:0] = 001b (saw-wave one-shot pulse mode)
- GTCR.MD[2:0] = 110b (triangle-wave PWM mode 3)
- GTBER.CCRB[1:0] = 01b, 10b, 11b (buffer operation with the GTCCRE register).

(6) GPTn_CMPF interrupt (n = 0 to 5)

An interrupt request is generated under the following condition:

- When the GTCCRF register functions as a compare match register, the GTCNT counter value matches with the GTCCRF register.

A compare match is not performed and therefore, an interrupt is not requested in the following conditions:

- GTCR.MD[2:0] = 001b (saw-wave one-shot pulse mode)
- GTCR.MD[2:0] = 110b (triangle-wave PWM mode 3)
- GTBER.CCRB[1:0] = 10b, 11b (buffer operation with the GTCCRF register).

(7) GPTn_OVF interrupt (n = 0 to 5)

An interrupt request is generated in the following conditions:

- In saw-wave mode, interrupt requests are enabled at overflows (when the GTCNT counter value changes from GTPR to 0 during up-counting)
- In triangle-wave mode, interrupt requests are enabled at crests (the GTCNT changes from GTPR to GTPR-1)

- In counting by hardware sources, an overflow (GTCNT changes from GTPR to 0 in up count) has occurred.

(8) GPTn_UDF interrupt (n = 0 to 5)

An interrupt request is generated in the following conditions.

- In saw-wave mode, interrupt requests are enabled at underflows (when the GTCNT counter value changes from 0 to GTPR during down-counting)
- In triangle-wave mode, interrupt requests are enabled at troughs (the GTCNT changes from 0 to 1)
- In counting by hardware sources, underflow (GTCNT changes from 0 to GTPR in down count) has occurred.

About Interrupt signals and interrupt status flags, see section 20.2.16. GTST : General PWM Timer Status Register.

(9) GPTn_PC Interrupt (n = 0 to 4)

When the GTPC.PCEN bit is 1 and the GTPC.PCNT counter is 1, an interrupt request is generated at the end of cycle.

20.4.2 DMAC and DTC Activation

The DMAC and DTC can be activated by the interrupt in each channel. For details, see section 12, Interrupt Controller Unit (ICU), section 15, DMA Controller (DMAC), and section 16, Data Transfer Controller (DTC).

20.5 Operations Linked by ELC

20.5.1 Event Signal Output to ELC

The GPT can perform operation linked with another module set in advance when its interrupt request signal is used as an event signal by the Event Link Controller (ELC).

The GPT has the following ELC event signals:

- Generation of compare match and input capture A interrupt (GPTn_CCMPA)
- Generation of compare match and input capture B interrupt (GPTn_CCMPB)
- Generation of compare match C interrupt (GPTn_CMPC)
- Generation of compare match D interrupt (GPTn_CMPD)
- Generation of compare match E interrupt (GPTn_CMPE)
- Generation of compare match F interrupt (GPTn_CMPF)
- Generation of overflow interrupt (GPTn_OVF)
- Generation of underflow interrupt (GPTn_UDF)
- Finish of period count function (GPTm_PC)

Note: n = 0 to 5
m = 0 to 4

20.5.2 Event Signal Inputs from ELC

The GPT can perform the following operations in response to a maximum of 8 events from the ELC:

- Start counting, stop counting, clear counting
- Up-counting, down-counting
- Input capture.

See section 17, Event Link Controller (ELC) for the connection between the ELC and the event signal input.

20.6 Noise Filter Function

Each pin for use in input capture and Hall sensor input to the GPT is equipped with a noise filter. The noise filter samples input signals at the sampling clock and removes the pulses whose length is less than 3 sampling cycles.

The noise filter functionality includes enabling and disabling the noise filter for each pin and setting of the sampling clock for each channel.

Figure 20.66 shows the timing of noise filtering.

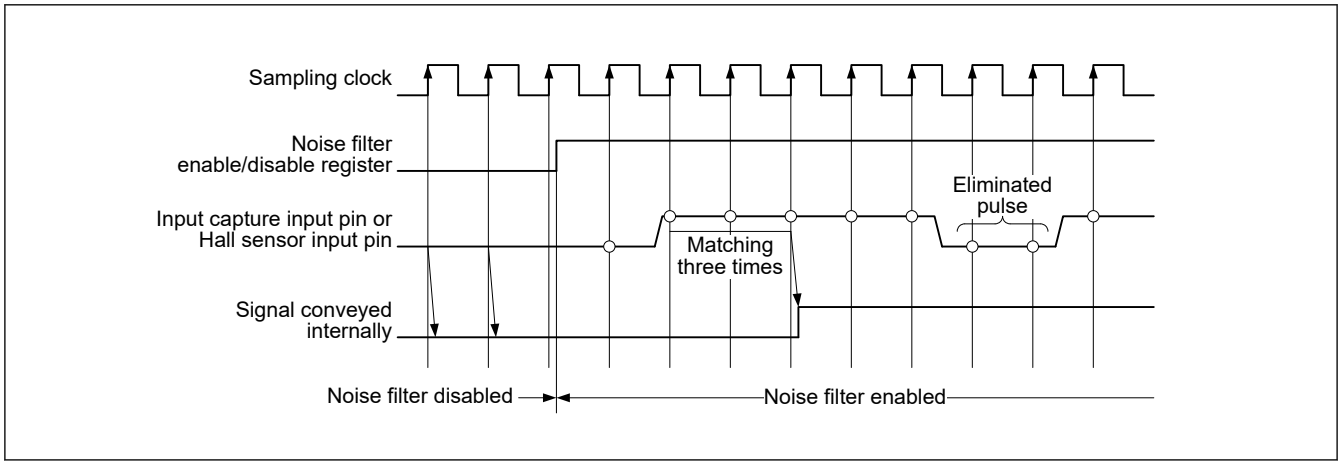

Figure 20.66 Timing of noise filtering

If noise filtering is enabled, the input capture operation or hall sensor input operation is performed on the edges of the noise filtered signal after a delay of (sampling interval × 2 + PCLKD) at the shortest. This is due to the noise filtering for the input capture input or hall sensor input.

20.7 Protection Function

20.7.1 Write-Protection for Registers

To prevent registers from being accidentally modified, registers can be write-protected in channel units by setting GTWP.WP. Write-protection can be set for the following registers:

GTSSR, GTPSR, GTCSR, GTUPSR, GTDNSR, GTICASR, GTICBSR, GTCR, GTUDDTYC, GTIOR, GTINTAD, GTST, GTBER, GTCNT, GTCCRA, GTCCRB, GTCCRC, GTCCRD, GTCCRE, GTCCRF, GTPR, GTPBR, GTDTCR, GTDVU, GTICLF, GTPC.

Every bit in registers GTSTR, GTSTP and GTCLR which can update the corresponding registers in other channels and can be updated by any of the corresponding registers in other channels conversely, can be protected by setting the GTWP.STRWP, STPWP, and CLRWP bits, respectively, per channel.

Likewise, writing to the GTSECSR and GTSECR registers, which can control all channels by writing to the GTSECSR and GTSECR registers of a given channel, can be enabled or disabled by the setting of the GTWP.CMNWP bit.

Protection using the GTWP register is only for write operations by the CPU. This protection does not cover updates to registers that occur in association with CPU writes.

20.7.2 Disabling of Buffer Operation

If the timing of the buffer register write is delayed relative to the timing for the buffer transfer, buffer operation can be suspended with the GTBER.BD[1] and BD[0] bits settings. Specifically, buffer transfer can be temporarily disabled even though a buffer transfer condition is generated during buffer register write, by setting the BD[1] and BD[0] bits to 1 (buffer operation disabled) before buffer register write, and setting the bits to 0 (buffer operation enabled) after completion of writing to all the buffer registers.

The BD[1] and BD[0] bits can be set on channel basis by writing directly to the GTBER register or it can be set to 0 simultaneously by setting the GTSECR register for multiple channels which were set by the GTSECSR register.

Figure 20.67 shows an example of operation for disabling buffer operation by writing to the GTBER register.

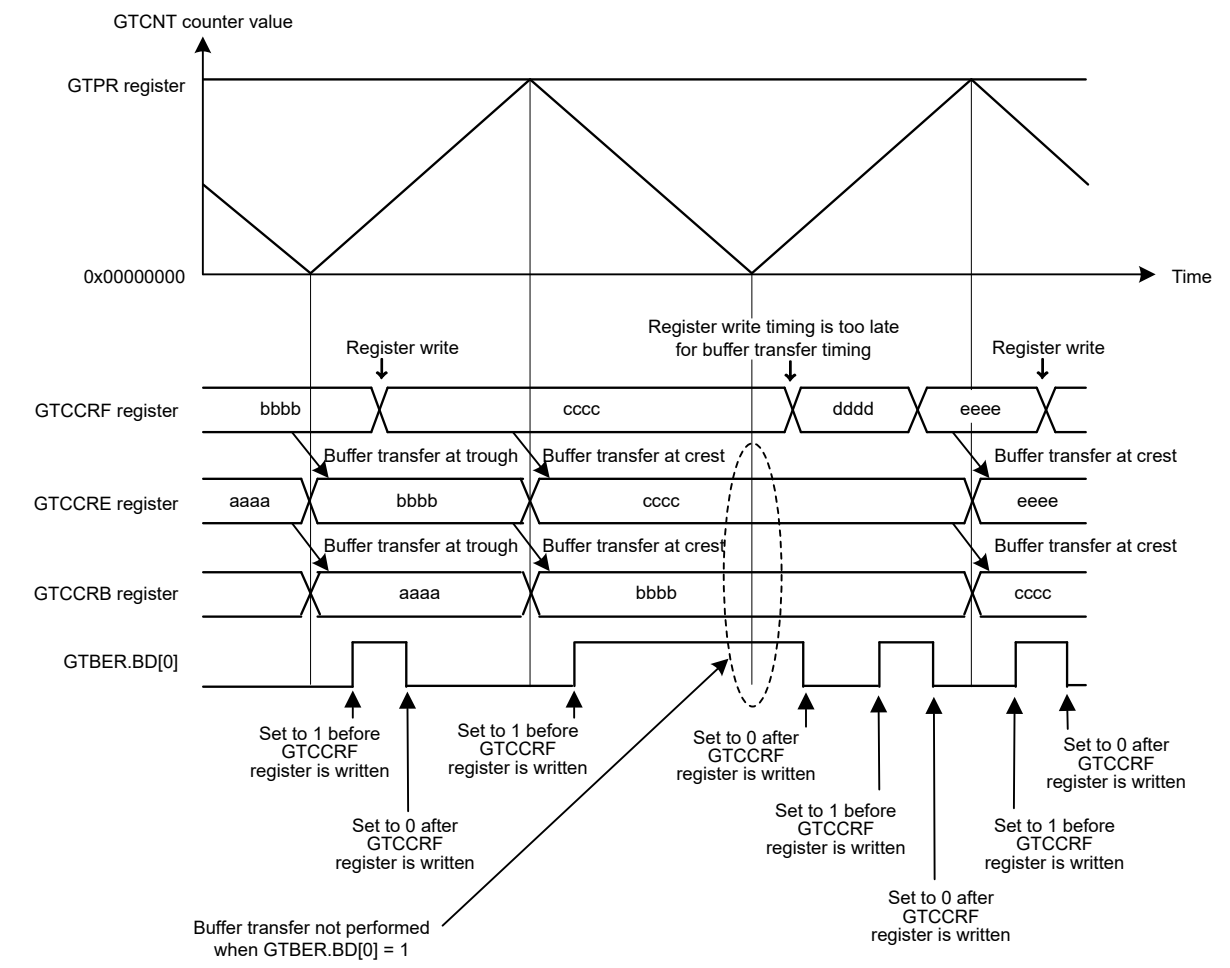

Note: The base address of registers are the same.

Figure 20.67 Example of operation for disabling buffer operation with triangle waves, double buffer operation, and buffer transfer at both troughs and crests

20.7.2.1 Simultaneous Control of Buffer Operations of Multiple Channels

The GTBER.BD bit can be set by writing directly to the GTBER register per channel or by making settings in the GTSECR register for multiple channels that have already set in the GTSECSR register.

Follow the procedure below to simultaneously set the GTBER.BD bits of multiple channels.

1. Select the channels for simultaneously setting by the GTSECSR register
   Set the GTSECSR register so that the values at the bit positions for the corresponding channels for simultaneously setting of the GTBER.BD bits become 1. All GTSECSR registers can be updated by writing to the GTSECSR register of any channel.
2. Simultaneously set the GTBER.BD bits by updating the GTSECR register
   In the GTSECR register, set the operation of the GTBER.BD bits (enabling or disabling of buffer operation) which are to be simultaneously set. Writing to a GTSECR register from any channel updates the GTBER.BD bits in all channels corresponding to the bits set as 1 in the GTSECSR register, in accordance with the value of the GTSECR register.

Figure 20.68 show examples of simultaneously controlling the enabling or disabling of buffer operation for multiple channels.

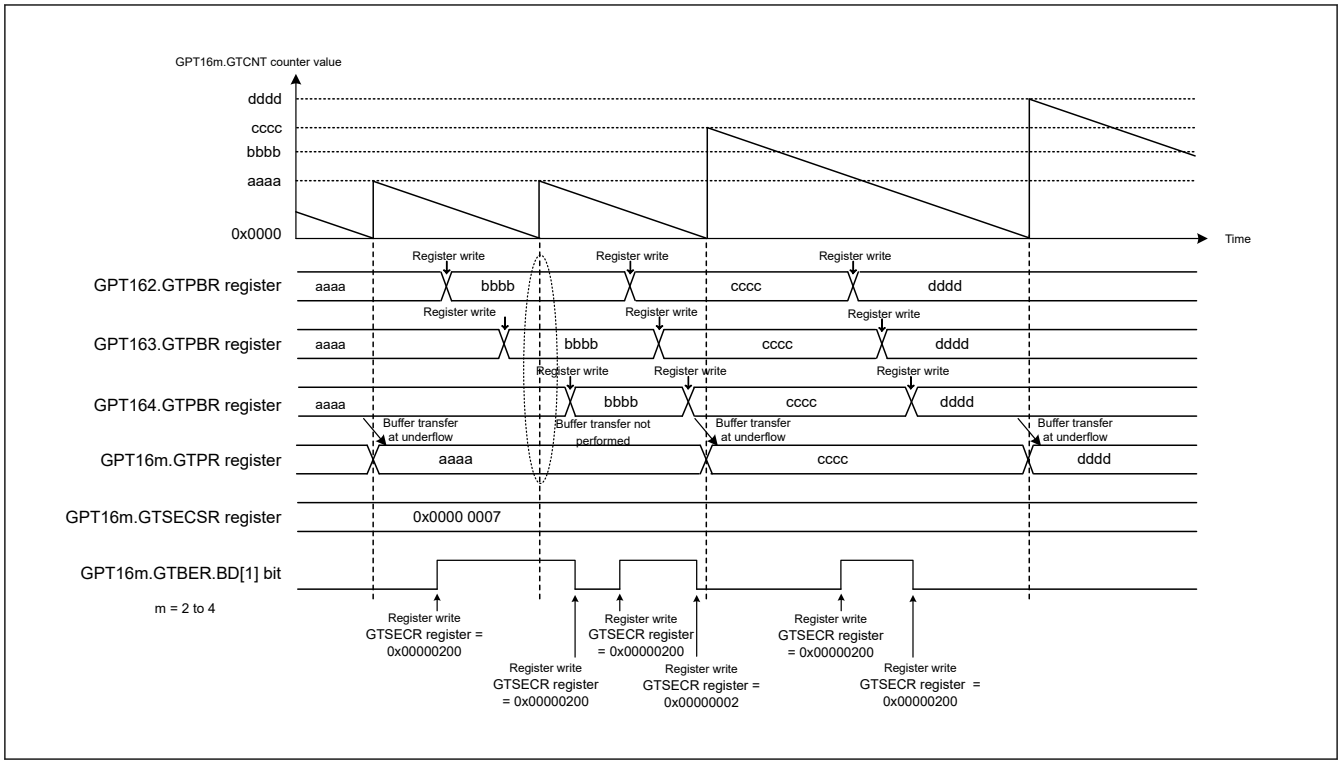

Figure 20.68 Example of multiple channel operation for disabling buffer operation (saw waves, single buffer operation)

20.7.3 GTIOCnm Pin Output Negate Control (n = 0 to 5, m = A, B)

For protection from system failure, the output disable control that changes the GTIOCnm pin output value forcibly is provided for GTIOCnm pin output by the request of output disable from POEG. Output protection is required when the same output level being on the GTIOCnA and GTIOCnB pins is detected. GPT detects this condition and generates output disable requests to POEG according to the setting of the output disable request permission bits, such as GTINTAD.GRPABH, GTINTAD.GRPABL. After the POEG performs the logical OR of the output disable request from each channel and the output disable request from the external input, the POEG generates output disable requests to GPT.

One output disable signal (representing the shared output disable request signal of the GTIOCnA pin and the GTIOCnB pin) out of 4 output disable requests generated by the POEG is selected by setting GTINTAD.GRP[1:0]. The status of the selected disable output request is monitored by reading the GTST.ODF bit. The output level during output disable is set based on the GTIOR.OADF[1:0] bits for the GTIOCnA pin and the GTIOR.OBDF[1:0] setting for the GTIOCnB pin.

The change to the output disable state is performed asynchronously by generating the output disable request from the POEG. The release of the output disable state is performed at end of cycle by terminating the output disable request. It is after 3 PCLKD at shortest when the output disable condition is released after the output disable request becomes no longer satisfied. To reliably control output disabling, clear the flag of POEG for which the condition for the request to disable the output is no longer satisfied after 4 cycles of PCLKD.

When event count is performed or when the output disable state should be released immediately without waiting for end of cycle, GTIOR.OADF[1:0] should be set to 00b (for GTIOCnA pin) or GTIOR.OBDF[1:0] should be set to 00b (for the GTIOCnB pin).

Figure 20.69 shows an example of the GTIOCnm pin output disable control operation. (n = 0 to 5, m = A, B)

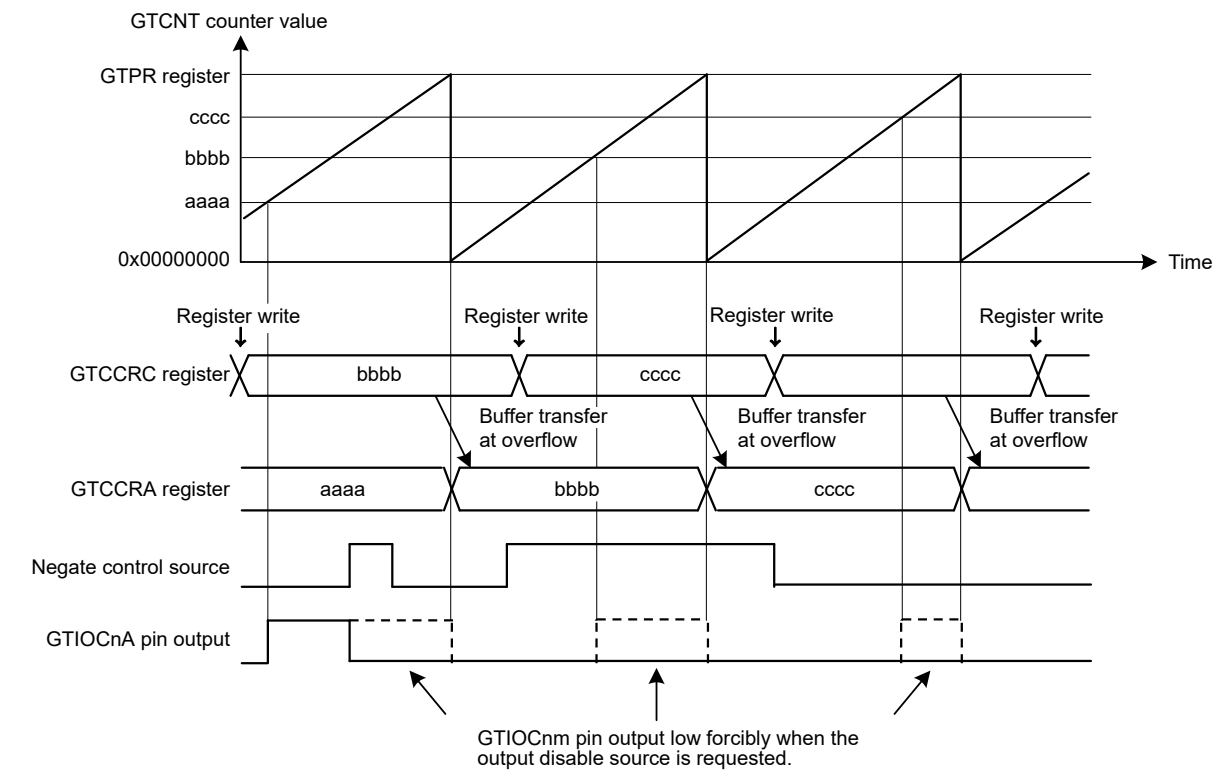

Note: The base address of registers are the same.

Figure 20.69 Example of GTIOCnm pin output disable control operation in saw-wave up-counting, buffer operation, active level 1, high output at GTCCRA compare match, low output at cycle end, and low output at output disable (n = 0 to 5, m = A, B)

20.8 Initialization Method of Output Pins

20.8.1 Pin Settings after Reset

The GPT registers are initialized at a reset. Start counting after selecting the port pin function with the PmnPFS register, setting GTIOR.OAE and GTIOR.OBE bits, and outputting the GPT function to external pins.

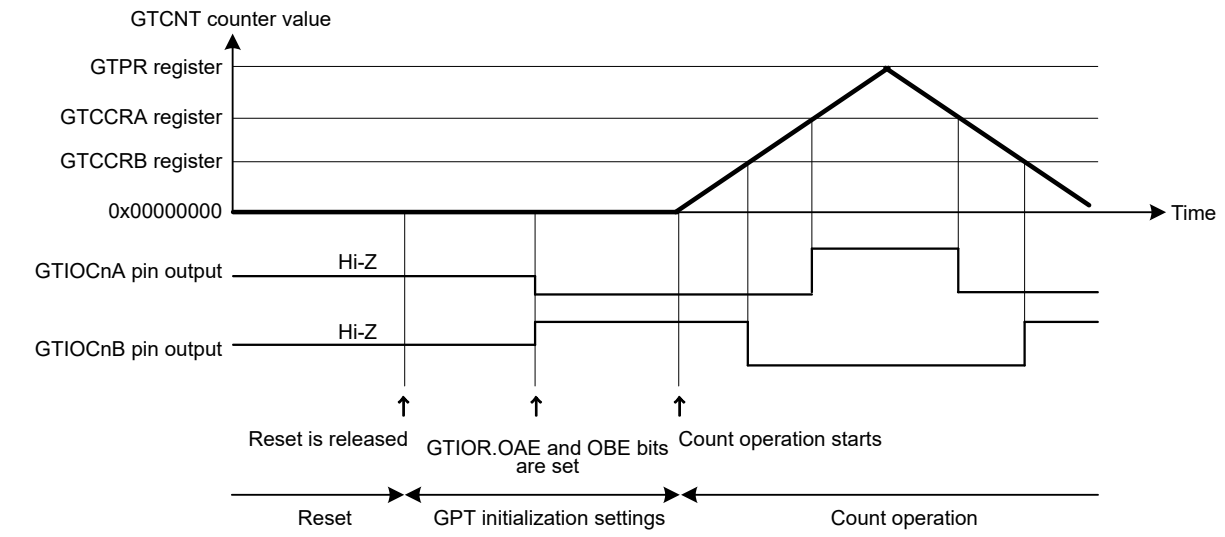

[Setting examples]
GTIOR.GTIOA[4:0] bits: Initial low output, output retained at cycle end, output toggled at compare match
GTIOR.GTIOB[4:0] bits: Initial high output, output retained at cycle end, output toggled at compare match

Note: The base address of registers are the same.

Figure 20.70 Example of pin settings after reset

20.8.2 Pin Initialization Due to Error during Operation

If an error occurs during GPT operation, the following four types of pin control can be performed before pin initialization:

- Set the OAHLD and OBHLD bits in GTIOR to 1 and retain the outputs at count stop
- Set the OAHLD and OBHLD bits in GTIOR to 0, specify arbitrary output values at OADFLT and OBDFLT in GTIOR, and output the arbitrary values at count stop
- Set the pin to output an arbitrary value as a general output port by setting the PDR, PODR registers and PmnPFS.PMR bit of the I/O port in advance. Set the OAE and OBE bits in GTIOR to 0, and the control bit associated with the pin in the PMR to 0 to allow arbitrary values to be output from the pin set as a general output port when an error occurs.
- Drive the output to a high impedance state using the POEG function.

If the automatic dead time setting is made, clear the GTDTCR.TDE bit to 0 after counting stops. When counting stops, only the values of registers that are changed by a GPT external source change. If counting is resumed, operation continues from where it stopped. If counting is stopped, the registers must be initialized before counting starts.

20.9 Usage Notes

20.9.1 Module-Stop Function Setting

The Module Stop Control Register can enable or disable GPT operation. The GPT is initially stopped after a reset. Releasing the module-stop state enables access to the registers. For details, see section 10, Low Power Modes.

20.9.2 GTCCRn Settings during Compare Match Operation (n = A to F)

(1) When automatic dead time setting is made in triangle-wave PWM mode

The GTCCRA register must satisfy all of the following conditions:

- GTDVU < GTCCRA
- 0 < GTCCRA < GTPR

(2) When automatic dead time setting is not made in triangle-wave PWM mode

The GTCCRA register must be set within the range of 0 < GTCCRA < GTPR. If GTCCRA = 0 or GTCCRA = GTPR is set, a compare match occurs within the cycle only when GTCCRA = 0 or GTCCRA = GTPR is satisfied. When GTCCRA > GTPR, no compare match occurs.

Similarly, GTCCRB must be set within the range of 0 < GTCCRB < GTPR. If GTCCRB = 0 or GTCCRB = GTPR is set, a compare match occurs within the cycle only when GTCCRB is 0 or GTCCRB = GTPR is satisfied. When GTCCRB > GTPR, no compare match occurs.

(3) When automatic dead time setting is made in saw-wave one-shot pulse mode

The GTCCRC and GTCCRD registers must be set to satisfy the following restrictions. If the restrictions are not satisfied, the correct output waveforms with secured dead time may not be obtained.

- In up-counting: GTCCRC < GTCCRD, GTCCRC > GTDVU, GTCCRD < GTPR - GTDVU
- In down-counting: GTCCRC > GTCCRD, GTCCRC < GTPR - GTDVU, GTCCRD > GTDVU

(4) When automatic dead time setting is not made in saw-wave one-shot pulse mode

The GTCCRC and GTCCRD registers must be set to satisfy the following restrictions. If the restrictions are not satisfied, two compare matches do not occur and pulse output cannot be performed.

- In up-counting: 0 < GTCCRC < GTCCRD < GTPR
- In down-counting: GTPR > GTCCRC > GTCCRD > 0

Similarly, GTCCRE and GTCCRF must be set to satisfy the following restrictions. If the restrictions are not satisfied, two compare matches do not occur and pulse output cannot be performed.

- In up-counting: 0 < GTCCRE < GTCCRF < GTPR
- In down-counting: GTPR > GTCCRE > GTCCRF > 0.

(5) In saw-wave PWM mode

The GTCCRA register must be set with the range of 0 < GTCCRA < GTPR. If GTCCRA = 0 or GTCCRA = GTPR is set, a compare match occurs within the cycle only when GTCCRA = 0 or GTCCRA = GTPR is satisfied. If GTCCRA > GTPR is set, no compare match occurs.

Similarly, GTCCRB must be set with the range of 0 < GTCCRB < GTPR. If GTCCRB = 0 or GTCCRB = GTPR is set, a compare match occurs within the cycle only when GTCCRB = 0 or GTCCRB = GTPR is satisfied. If GTCCRB > GTPR is set, no compare match occurs.

20.9.3 Setting Range for GTCNT Counter

The GTCNT counter register must be set with the range of 0 ≤ GTCNT ≤ GTPR.

20.9.4 Starting and Stopping the GTCNT Counter

The control timing of starting and stopping the GTCNT counter by the GTCR.CST bit synchronizes the count clock that is selected in GTCR.TPCS[3:0]. When GTCR.CST is updated, the GTCNT counter starts/stops after a count clock that is selected in GTCR.TPCS[3:0]. Therefore, an event generated before the GTCNT counter actually starts is ignored, resulting in situations in which an event is accepted or an interrupt occurs after GTCR.CST is set to 0.

20.9.5 Priority Order of Each Event

(1) GTCNT register

Table 20.47 shows a priority order of events updating the GTCNT register.

Table 20.47 Priority order of sources updating GTCNT

Source updating GTCNT	Priority order
Writing by CPU (writing to GTCNT/GTCLR)	High
Clear by hardware sources set in GTCSR	↑
Count up or down by hardware sources set in GTUPSR/GTDNSR	↑
Count operation	Low

If up-counting and down-counting by hardware sources occur at the same time, the GTCNT counter value does not change. When there is a conflict between updating the GTCNT register and reading by the CPU, pre-update data is read.

(2) GTCR.CST bit

When there is a conflict between starting/stopping by hardware sources set in the GTSSR/GTPSR registers and writing by the CPU (writing to GTCR/GTSTR/GTSTP registers), the writing by CPU has priority over the starting/stopping by hardware sources.

In case that stop by the period count function conflicts with start by the CPU writing (GTCR register writing/GTSTR register writing), the period count function is finished with setting the GTST.PCF flag. The CST bit is not changed and the GTCNT continues to count.

When there is a conflict between starting by hardware sources set in the GTSSR register and stopping by hardware sources set in GTPSR register, the GTCR.CST bit value does not change. When there is a conflict between updating the GTCR.CST bit and reading by the CPU (reading from GTCR/GTSTR/GTSTP registers), pre-update data is read.

(3) GTCCRm registers (m = A to F)

When there is a conflict between input capture/buffer transfer operation and writing to the GTCCRm registers, the writing to GTCCRm registers has priority over input capture/buffer transfer operation. When there is a conflict between input capture and writing to the counter register by the CPU or updating the counter register by hardware sources, the pre-update counter value is captured. When there is a conflict between updating the GTCCRm registers and reading by the CPU, pre-update data is read.

(4) GTPR register

When there is a conflict between buffer transfer operation and writing to the GTPR register, writing to GTPR register has priority over buffer transfer operation. When there is a conflict between updating GTPR register and reading by the CPU, pre-update data is read.

21. Low Power Asynchronous General Purpose Timer (AGTW)

21.1 Overview

The low power Asynchronous General Purpose Timer (AGT) is a 32-bit timer that can be used for pulse output, external pulse width or period measurement, and counting external events. This timer consists of a reload register and a down counter. The reload register and the down counter are allocated to the same address, and can be accessed with the AGT register.

Table 21.1 lists the AGT specifications, Figure 21.1 shows a block diagram, and Table 21.2 lists the I/O pins.

Table 21.1 AGT specifications

Parameter		Description
Operating modes	Timer mode	The count source is counted
	Pulse output mode	The count source is counted and the output is inverted at each timer underflow
	Event counter mode	An external event is counted
	Pulse width measurement mode	An external pulse width is measured
	Pulse period measurement mode	An external pulse period is measured
Number of Channels		32 bits × 2 channels (AGTn (n = 0, 1))
Count source (operating clock)*2	Timer mode	PCLKB, PCLKB/2, PCLKB/8, AGTLCLK/d, AGTSCLK/d (d = 1, 2, 4, 8, 16, 32, 64, or 128), or underflow signal of AGT0 selectable.*1
	Pulse output mode	
	Pulse width measurement mode	
	Pulse period measurement mode	
	Event counting mode	External event input
Interrupt and Event Link function		● Underflow event signal or measurement complete event signal – When the counter underflows – When the measurement of the active width of the external input pin (AGTIOn) completes in pulse width measurement mode – When the set edge of the external input pin (AGTIOn) is input in pulse period measurement mode. ● Compare match A event signal – When the values of AGT register and AGTCMA register matched (compare match A function enabled). ● Compare match B event signal – When the values of AGT and AGTCMB registers matched (compare match B function enabled). ● Return from Snooze mode or Software Standby mode can be performed with AGT1_AGTI, AGT1_AGTCMAI, or AGT1_AGTCMBI*3
Selectable functions		● Compare match function One or two of the AGT Compare Match A register and AGT Compare Match B register is selectable.
TrustZone Filter		Security attribution can be set for each channels

Note 1. AGT0 cannot use underflow signal. AGT1 connects directly with the underflow event signal from the AGT0 timer.
Note 2. Satisfy the frequency of the peripheral module clock (PCLKB) ≥ the frequency of the count source clock. When selecting AGTLCLK/d or AGTSCLK/d as the count source clock, the frequency of PCLKB should be at least twice that of the count source clock.
Note 3. For details, see section 10, Low Power Modes.

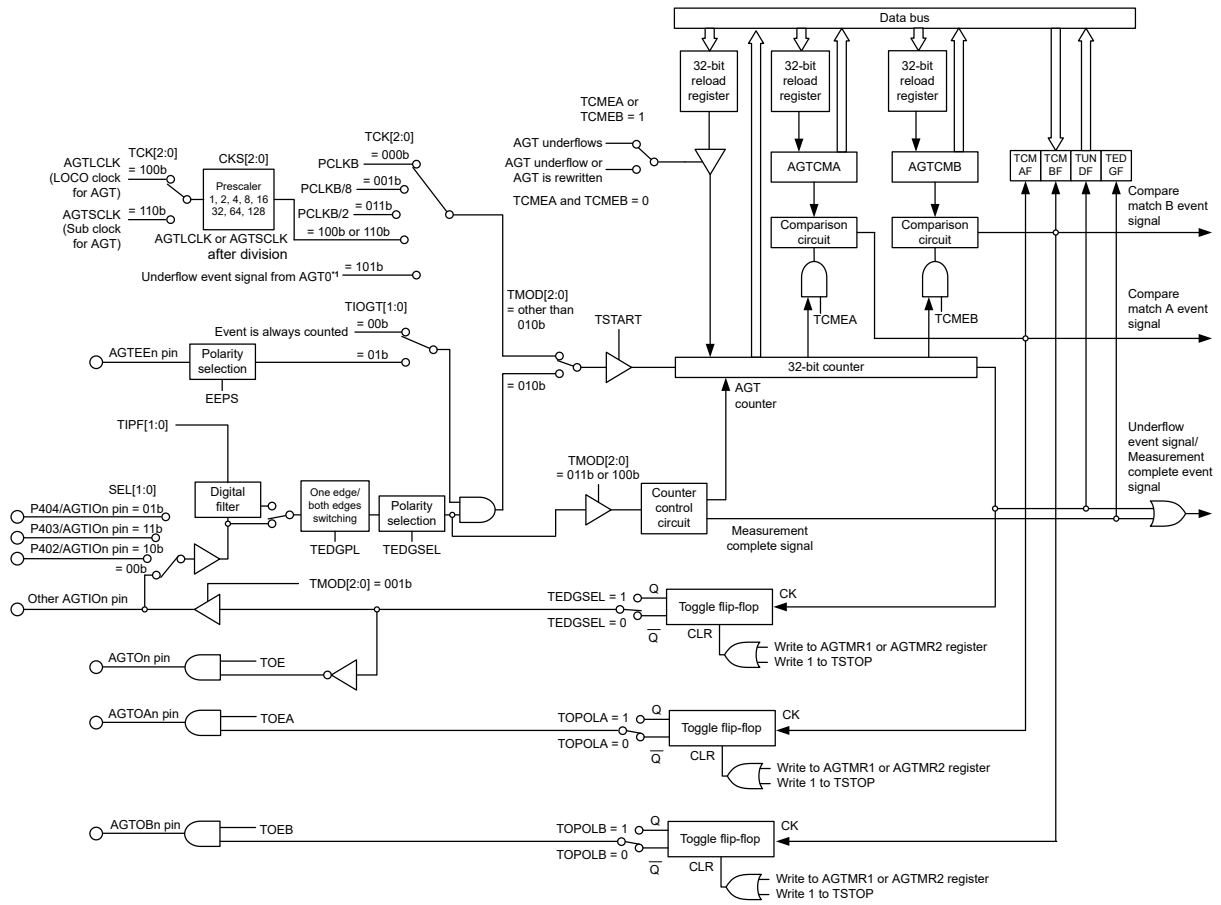

Note 1. AGT0 cannot use AGT0 underflow event. AGT1 uses the underflow of AGT0.

Figure 21.1 AGT block diagram

Table 21.2 AGT I/O pins

Pin name	I/O	Function
AGTEEn	Input	External event input enable for AGT
AGTIOn	Input/output	External event input and pulse output for AGT
AGTOn	Output	Pulse output for AGT
AGTOAn	Output	Compare match A output for AGT
AGTOBn	Output	Compare match B output for AGT

Note: Channel number: n = 0, 1
Note: P402 to P404 can only be used as input.

21.2 Register Descriptions

21.2.1 AGT : AGT Counter Register

Base address: AGTWn = 0x400E_8000 + 0x0100 × n (n = 0, 1)

Offset address: 0x00

Bit position:	31																													0
Bit field:																														
Value after reset:	1	1	1	1	1	1	1	1	1	1	1	1	1	1	1	1	1	1	1	1	1	1	1	1	1	1	1	1	1	1

Bit	Symbol	Function	R/W
31:0	n/a	32-bit counter and reload register Setting range : 0x00000000 to 0xFFFFFFFF	R/W

AGTWn.AGT is a 32-bit register. The write value is written to the reload register and the read value is read from the counter.

The states of the reload register and the counter change according to the TSTART bit in the AGTCR register and TCMEA/TCMEB bit in the AGTCMSR register. For details, see section 21.3.1. Reload Register and Counter Rewrite Operation.

When 1 is written to the TSTOP bit in the AGTCR register, AGT counter is forcibly stopped and set to 0xFFFFFFFF.

When the TCK[2:0] bits setting in the AGTMR1 register are a value other than 001b (PCLKB/8) or 011b (PCLKB/2), if the AGT register is set to 0x00000000, a request signal to the ICU, the DTC, the DMAC, and the ELC is generated once immediately after the count starts. The AGTOn and AGTIOn pin output are toggled.

When the AGT register is set to 0x00000000 in event counter mode, regardless of the value of TCK[2:0] bits, a request signal to the ICU, the DTC, the DMAC, and the ELC is generated once immediately after the count starts.

In addition, the AGTOn pin output is toggled even during a period other than the specified count period. When the AGT register is set to 0x00000001 or more, a request signal is generated each time AGT underflows.

21.2.2 AGTCMA : AGT Compare Match A Register

Base address: AGTWn = 0x400E_8000 + 0x0100 × n (n = 0, 1)

Offset address: 0x04

Bit position:	31																													0
Bit field:																														
Value after reset:	1	1	1	1	1	1	1	1	1	1	1	1	1	1	1	1	1	1	1	1	1	1	1	1	1	1	1	1	1	1

Bit	Symbol	Function	R/W
31:0	n/a	32-bit compare match A data is stored.*1 Setting range : 0x00000000 to 0xFFFFFFFF	R/W

Note 1. Set the AGTCMA register to 0xFFFFFFFF when compare match A is not used.

The AGTCMA register is a read/write register to set a value for compare match with the AGT counter. The states of the reload register and compare register A change according to the TSTART bit in the AGTCR register. For details, see section 21.3.2. Reload Register and AGT Compare Match A/B Register Rewrite Operation.

21.2.3 AGTCMB : AGT Compare Match B Register

Base address: AGTWn = 0x400E_8000 + 0x0100 × n (n = 0, 1)

Offset address: 0x08

Bit position:	31																													0
Bit field:																														
Value after reset:	1	1	1	1	1	1	1	1	1	1	1	1	1	1	1	1	1	1	1	1	1	1	1	1	1	1	1	1	1	1

Bit	Symbol	Function	R/W
31:0	n/a	32-bit compare match B data is stored.*1 Setting range : 0x00000000 to 0xFFFFFFFF	R/W

Note 1. Set the AGTCMB register to 0xFFFFFFFF when compare match B is not used.

The AGTCMB register is a read/write register to set a value for compare match with the AGT counter. The states of the reload register and compare register B change according to the TSTART bit in the AGTCR register. For details, see section 21.3.2. Reload Register and AGT Compare Match A/B Register Rewrite Operation.

21.2.4 AGTCR : AGT Control Register

Base address: AGTWn = 0x400E_8000 + 0x0100 × n (n = 0, 1)

Offset address: 0x0C

Bit position:	7	6	5	4	3	2	1	0
Bit field:	TCMBF	TCMAF	TUNDF	TEDGF	—	TSTOP	TCSTF	TSTART
Value after reset:	0	0	0	0	0	0	0	0

Bit	Symbol	Function	R/W
0	TSTART	AGT Count Start*2 0: Count stops 1: Count starts	R/W
1	TCSTF	AGT Count Status Flag*2 0: Count stopped 1: Count in progress	R
2	TSTOP	AGT Count Forced Stop*1 0: Writing is invalid 1: The count is forcibly stopped	W
3	—	This bit is read as 0. The write value should be 0.	R/W
4	TEDGF	Active Edge Judgment Flag 0: No active edge received 1: Active edge received	R/(W)*3
5	TUNDF	Underflow Flag 0: No underflow 1: Underflow	R/(W)*3
6	TCMAF	Compare Match A Flag 0: No match 1: Match	R/(W)*3
7	TCMBF	Compare Match B Flag 0: No match 1: Match	R/(W)*3

Note 1. When 1 (count is forcibly stopped) is written to the TSTOP bit, the TSTART bit and TCSTF flag are initialized at the same time. The pulse output level is also initialized. The read value is 0.
Note 2. For information on using the TSTART bit and TCSTF flag, see section 21.4.1. Count Operation Start and Stop Control.
Note 3. Only 0 can be written to clear the flag.

TSTART bit (AGT Count Start)

The count operation is started by writing 1 to the TSTART bit and stopped by writing 0. When the TSTART bit is set to 1 (count starts), the TCSTF flag is set to 1 (count in progress) in synchronization with the count source. Also, after 0 is written to the TSTART bit, the TCSTF flag is set to 0 (count stops) in synchronization with the count source. For details, see section 21.4.1. Count Operation Start and Stop Control.

TCSTF flag (AGT Count Status Flag)

The TCSTF flag indicates the AGT count status.

[Setting condition]

- When 1 is written to the TSTART bit (the TCSTF flag is set to 1 in synchronization with the count source).

[Clearing conditions]

- When 0 is written to the TSTART bit (the TCSTF flag is set to 0 in synchronization with the count source)
- When 1 is written to the TSTOP bit.

TSTOP bit (AGT Count Forced Stop)

When 1 is written to the TSTOP bit, the count is forcibly stopped. The read value is 0.

TEDGF flag (Active Edge Judgment Flag)

The TEDGF flag indicates that an active edge was detected.

[Setting condition]

- When the measurement of the active width of the external input pin (AGTIOn) is complete in pulse width measurement mode
- When the set edge of the external input pin (AGTIOn) is input in pulse period measurement mode.

[Clearing condition]

- When 0 is written to this flag by software.

TUNDF flag (Underflow Flag)

The TUNDF flag indicates that the counter underflowed.

[Setting condition]

- When the counter underflows.

[Clearing condition]

- When 0 is written to this flag by software.

TCMAF flag (Compare Match A Flag)

The TCMAF flag indicates that compare match A was detected.

[Setting condition]

- When the value in the AGT register matches the value in the AGTCMA register.

[Clearing condition]

- When 0 is written to this flag by software.

TCMBF flag (Compare Match B Flag)

The TCMBF flag indicates that compare match B was detected.

[Setting condition]

- When the value in the AGT register matches the value in the AGTCMB register.

[Clearing condition]

- When 0 is written to this flag by software.

21.2.5 AGTMR1 : AGT Mode Register 1

Base address: AGTWn = 0x400E_8000 + 0x0100 × n (n = 0, 1)

Offset address: 0x0D

Bit position:	7	6	5	4	3	2	1	0
Bit field:	—	TCK[2:0]			TEDGPL	TMOD[2:0]		
Value after reset:	0	1	0	0	0	0	0	0

Bit	Symbol	Function	R/W
2:0	TMOD[2:0]	Operating Mode*3 0 0 0: Timer mode 0 0 1: Pulse output mode 0 1 0: Event counter mode 0 1 1: Pulse width measurement mode 1 0 0: Pulse period measurement mode Others: Setting prohibited	R/W

Bit	Symbol	Function	R/W
3	TEDGPL	Edge Polarity*4 0: Single-edge 1: Both-edge	R/W
6:4	TCK[2:0]	Count Source*1 *2 *5 *7 0 0 0: PCLKB 0 0 1: PCLKB/8 0 1 1: PCLKB/2 1 0 0: Divided clock AGTLCLK specified by CKS[2:0] bits in the AGTMR2 register 1 0 1: Underflow event signal from AGT0*6 1 1 0: Divided clock AGTSCLK specified by CKS[2:0] bits in the AGTMR2 register Others: Setting prohibited	R/W
7	—	This bit is read as 0. The write value should be 0.	R/W

Note: Write access to the AGTMR1 register initializes the output from the AGTOn, AGTIOn, AGTOAn, and AGTOBn pins. For details on the output level at initialization, see section 21.2.7. AGTIOC : AGT I/O Control Register.
Note 1. When event counter mode is selected, the external input pin (AGTIOn) is selected as the count source regardless of the setting of TCK[2:0] bits.
Note 2. Do not switch count sources during count operation. Only switch count sources when both the TSTART bit and TCSTF flag in the AGTCR register are set to 0 (count stops).
Note 3. The operating mode can only be changed when the count is stopped while both the TSTART bit and TCSTF flag in the AGTCR register are set to 0 (count is stopped). Do not change the operating mode during count operation.
Note 4. The TEDGPL bit is enabled only in event counter mode.
Note 5. To run AGT in Software Standby mode or Snooze mode, select AGTLCLK or AGTSCLK (TCK[2:0] = 100b, 110b).
Note 6. AGT0 cannot use AGT0 underflow (setting prohibited). AGT1 uses the AGT0 underflow.
Note 7. Do not change the TCK[2:0] bits when the CKS[2:0] bits in the AGTMR2 register is not 000b. First, change the CKS[2:0] bits in the AGTMR2 register to 000b. Then change the TCK[2:0] bits and wait for one cycle of the count source.

21.2.6 AGTMR2 : AGT Mode Register 2

Base address: AGTWn = 0x400E_8000 + 0x0100 × n (n = 0, 1)

Offset address: 0x0E

Bit position:	7	6	5	4	3	2	1	0
Bit field:	LPM	—	—	—	—	CKS[2:0]		
Value after reset:	0	0	0	0	0	0	0	0

Bit	Symbol	Function	R/W
2:0	CKS[2:0]	AGTLCLK or AGTSCLK Count Source Clock Frequency Division Ratio*1 *2 *3 0 0 0: 1/1 0 0 1: 1/2 0 1 0: 1/4 0 1 1: 1/8 1 0 0: 1/16 1 0 1: 1/32 1 1 0: 1/64 1 1 1: 1/128	R/W
6:3	—	These bits are read as 0. The write value should be 0.	R/W
7	LPM	Low Power Mode 0: Normal mode 1: Low power mode	R/W

Note 1. Do not rewrite the CKS[2:0] bits during count operation. Only rewrite the CKS[2:0] bits when both the TSTART bit and TCSTF flag in the AGTCR register are set to 0 (count stops).
Note 2. When count source is AGTLCLK or AGTSCLK, the switch of CKS[2:0] bits is valid.
Note 3. Do not switch the TCK[2:0] bits in the AGTMR1 register when CKS[2:0] bits are not 000b. Switch the TCK[2:0] bits in the AGTMR1 register after CKS[2:0] bits are set to 000b, and wait for 1 cycle of the count source.

CKS[2:0] bit (AGTLCLK or AGTSCLK Count Source Clock Frequency Division Ratio)

CKS[2:0] bits select the Count Source Clock Frequency Division Ratio for AGTLCLK or AGTSCLK.

LPM bit (Low Power Mode)

The LPM bit sets the low power operation, which impacts access to certain AGT registers. Set this bit to 1 to operate in low power.

When this bit is 1, access to the following registers is prohibited:

- AGT/AGTCMA/AGTCMB/AGTCR.

After this bit is switched from 1 to 0, the first access to the register is constrained as follows:

- When reading from the AGT register, read AGT register twice. Only the second reading of data is valid.
- When writing to the AGT, AGTCMA, AGTCMB, and AGTCR register, allow at least 2 cycles of the count source clock when writing to the register.
- When confirm the value written to the AGT, AGTCMA, AGTCMB, and AGTCR registers.
  - When the count operation is stopped; after writing data, it can be read in the next cycle.
  - When the count operation is operating; after writing data, it can be read 4 cycles after the count source clock.

Figure 21.2 shows the flow of how to write LPM bit

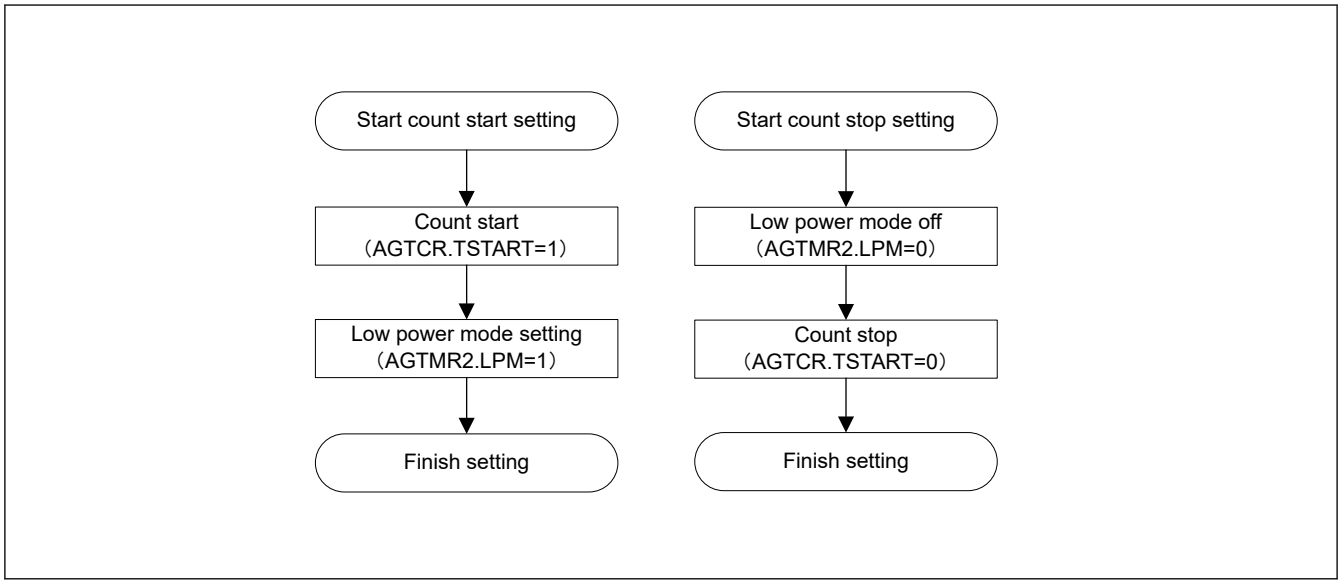

Figure 21.2 LPM how to write flow chart

21.2.7 AGTIOC : AGT I/O Control Register

Base address: AGTWn = 0x400E_8000 + 0x0100 × n (n = 0, 1)

Offset address: 0x10

Bit position:	7	6	5	4	3	2	1	0
Bit field:	TIOGT[1:0]		TIPF[1:0]		—	TOE	—	TEDG SEL
Value after reset:	0	0	0	0	0	0	0	0

Bit	Symbol	Function	R/W
0	TEDGSEL	I/O Polarity Switch Function varies depending on the operating mode (see Table 21.3 and Table 21.4).	R/W
1	—	This bit is read as 0. The write value should be 0.	R/W
2	TOE	AGTOn pin Output Enable 0: AGTOn pin output disabled 1: AGTOn pin output enabled	R/W

Bit	Symbol	Function	R/W
3	—	This bit is read as 0. The write value should be 0.	R/W
5:4	TIPF[1:0]	Input Filter*3 These bits specifies the sampling frequency of the filter for the AGTIOn input. If the input to the AGTIOn pin is sampled and the value matches three successive times, that value is taken as the input value. 0 0: No filter 0 1: Filter sampled at PCLKB 1 0: Filter sampled at PCLKB/8 1 1: Filter sampled at PCLKB/32	R/W
7:6	TIOGT[1:0]	Count Control*1 *2 0 0: Event is always counted 0 1: Event is counted during polarity period specified for AGTEEn pin Others: Setting prohibited	R/W

Note 1. When AGTEEn pin is used, the polarity to count an event can be selected with the EEPS bit in the AGTISR register.
Note 2. TIOGT[1:0] bits are enabled only in event counter mode.
Note 3. When event counter mode operation is performed during Software Standby mode, the digital filter function cannot be used.

TEDGSEL bit (I/O Polarity Switch)

The TEDGSEL bit switches the AGTOn pin output polarity and the AGTIOn pin input/output edge and polarity.

In pulse output mode, it only controls polarity of the AGTOn pin output and AGTIOn pin output. AGTOn pin output and AGTIOn pin output are initialized when the AGTMR1 register is written or the TSTOP bit in the AGTCR register is written with 1.

TOE bit (AGTOn pin Output Enable)

The TOE bit selects whether the AGTOn pin output is disabled or enabled.

TIPF[1:0] bits (Input Filter)

The TIPF[1:0] bits specify the sampling frequency of the AGTIOn pin input filter. When the input to the AGTIOn pin is sampled and the values match three times in succession, the value is regarded as the input value.

TIOGT[1:0] bits (Count Control)

The TIOGT[1:0] bits control the event count.

Table 21.3 AGTIOn pin I/O edge and polarity switching

Operating mode	Function
Timer mode	Not used
Pulse output mode	0: Output is started at high (initialization level: high), for example, inverted output 1: Output is started at low (initialization level: low), for example, normal output
Event counter mode	0: Count on rising edge 1: Count on falling edge
Pulse width measurement mode	0: Low-level width is measured 1: High-level width is measured
Pulse period measurement mode	0: Measure from one rising edge to the next rising edge 1: Measure from one falling edge to the next falling edge

Note: When the TOE bit is 0, the pin state is Hi-Z.

Table 21.4 AGTOn pin output polarity switching

Operating mode	Function
All modes	0: Output is started at low (initial level: low): normal output 1: Output is started at high (initial level: high): inverted output

Note: When the TOE bit is 0, a value according to the set value of the TEDGSEL bit in the pulse output mode is output.

21.2.8 AGTISR : AGT Event Pin Select Register

Base address: AGTWn = 0x400E_8000 + 0x0100 × n (n = 0, 1)

Offset address: 0x11

Bit position:	7	6	5	4	3	2	1	0
Bit field:	—	—	—	—	—	EEPS	—	—
Value after reset:	0	0	0	0	0	0	0	0

Bit	Symbol	Function	R/W
1:0	—	These bits are read as 0. The write value should be 0.	R/W
2	EEPS	AGTEEn Polarity Selection 0: An event is counted during the low-level period 1: An event is counted during the high-level period	R/W
7:3	—	These bits are read as 0. The write value should be 0.	R/W

EEPS bit (AGTEEn Polarity Selection)

The EEPS bit selects the polarity of events to be counted.

21.2.9 AGTCMSR : AGT Compare Match Function Select Register

Base address: AGTWn = 0x400E_8000 + 0x0100 × n (n = 0, 1)

Offset address: 0x12

Bit position:	7	6	5	4	3	2	1	0
Bit field:	—	TOPOLB	TOEB	TCMEB	—	TOPOLA	TOEA	TCMEA
Value after reset:	0	0	0	0	0	0	0	0

Bit	Symbol	Function	R/W
0	TCMEA	AGT Compare Match A Register Enable*1 *2 *3 0: AGT Compare match A register disabled 1: AGT Compare match A register enabled	R/W
1	TOEA	AGTOAn Pin Output Enable*1 *2 0: AGTOAn pin output disabled 1: AGTOAn pin output enabled	R/W
2	TOPOLA	AGTOAn Pin Polarity Select*1 *2 0: AGTOAn pin output is started on low. i.e. normal output 1: AGTOAn pin output is started on high. i.e. inverted output	R/W
3	—	This bit is read as 0. The write value should be 0.	R/W
4	TCMEB	AGT Compare Match B Register Enable*1 *2 *3 0: Compare match B register disabled 1: Compare match B register enabled	R/W
5	TOEB	AGTOBn Pin Output Enable*1 *2 0: AGTOBn pin output disabled 1: AGTOBn pin output enabled	R/W
6	TOPOLB	AGTOBn Pin Polarity Select*1 *2 0: AGTOBn pin output is started on low. i.e. normal output 1: AGTOBn pin output is started on high. i.e. inverted output	R/W
7	—	This bit is read as 0. The write value should be 0.	R/W

Note 1. Do not rewrite the AGTCMSR register during a count operation. Only rewrite the AGTCMSR register when both the TSTART bit and TCSTF flag in the AGTCR register are set to 0 (count stops).
Note 2. Do not set 1 when in pulse width measurement mode or pulse period measurement mode.
Note 3. When 1 is written to the TSTOP bit in the AGTCR register, TCMEA and TCMEB is forcibly stopped and set to 0.

21.2.10 AGTIOSEL : AGT Pin Select Register

Base address: AGTWn = 0x400E_8000 + 0x0100 × n (n = 0, 1)

Offset address: 0x13

Bit position:	7	6	5	4	3	2	1	0
Bit field:	—	—	—	TIES	—	—	SEL[1:0]	
Value after reset:	0	0	0	0	0	0	0	0

Bit	Symbol	Function	R/W
1:0	SEL[1:0]	AGTIOn Pin Select*1 0 0: Select the AGTIOn except for the following pins 0 1: Select the P404/AGTIOn P404/AGTIOn as input only. It cannot be used for output. 1 0: Select the P402/AGTIOn P402/AGTIOn as input only. It cannot be used for output. 1 1: Select the P403/AGTIOn P403/AGTIOn as input only. It cannot be used for output.	R/W
3:2	—	These bits are read as 0. The write value should be 0.	R/W
4	TIES	AGTIOn Pin Input Enable 0: External event input is disabled during Software Standby mode 1: External event input is enabled during Software Standby mode	R/W
7:5	—	These bits are read as 0. The write value should be 0.	R/W

Note 1. You must set the Pin Function Select Register. See section 18, I/O Ports.

The AGTIOSEL register sets the AGTIOn pin when using the AGTIOn pin in Software Standby mode.

SEL[1:0] bits (AGTIOn Pin Select)

The SEL[1:0] bits select the AGTIOn pin function.

TIES bit (AGTIOn Pin Input Enable)

The TIES bit enables or disables an external event input.

21.3 Operation

21.3.1 Reload Register and Counter Rewrite Operation

Regardless of the operating mode, the timing of the rewrite operation to the reload register and the counter differs depending on the value of the TSTART bit in the AGTCR register and of the TCMEA or TCMEB bit in the AGTCMSR register. When the TSTART bit is 0 (count stops), the count value is directly written to the reload register and the counter. When the TSTART bit is 1 (count starts) and the TCMEA bit and TCMEB bit are 0 (AGT compare match A/B register are invalid), the value is written to the reload register in synchronization with the count source, and then to the counter in synchronization with the next count source. When the TSTART bit is 1 (count starts) and the TCMEA bit or the TCMEB bit is 1 (AGT compare match A register or compare match B register is valid), the value is written to the reload register in synchronization with the count source, and then to the counter in synchronization with the underflow of the counter.

Figure 21.3 and Figure 21.4 show the timing of rewrite operation with TSTART bit value and TCMEA/TCMEB bit value.

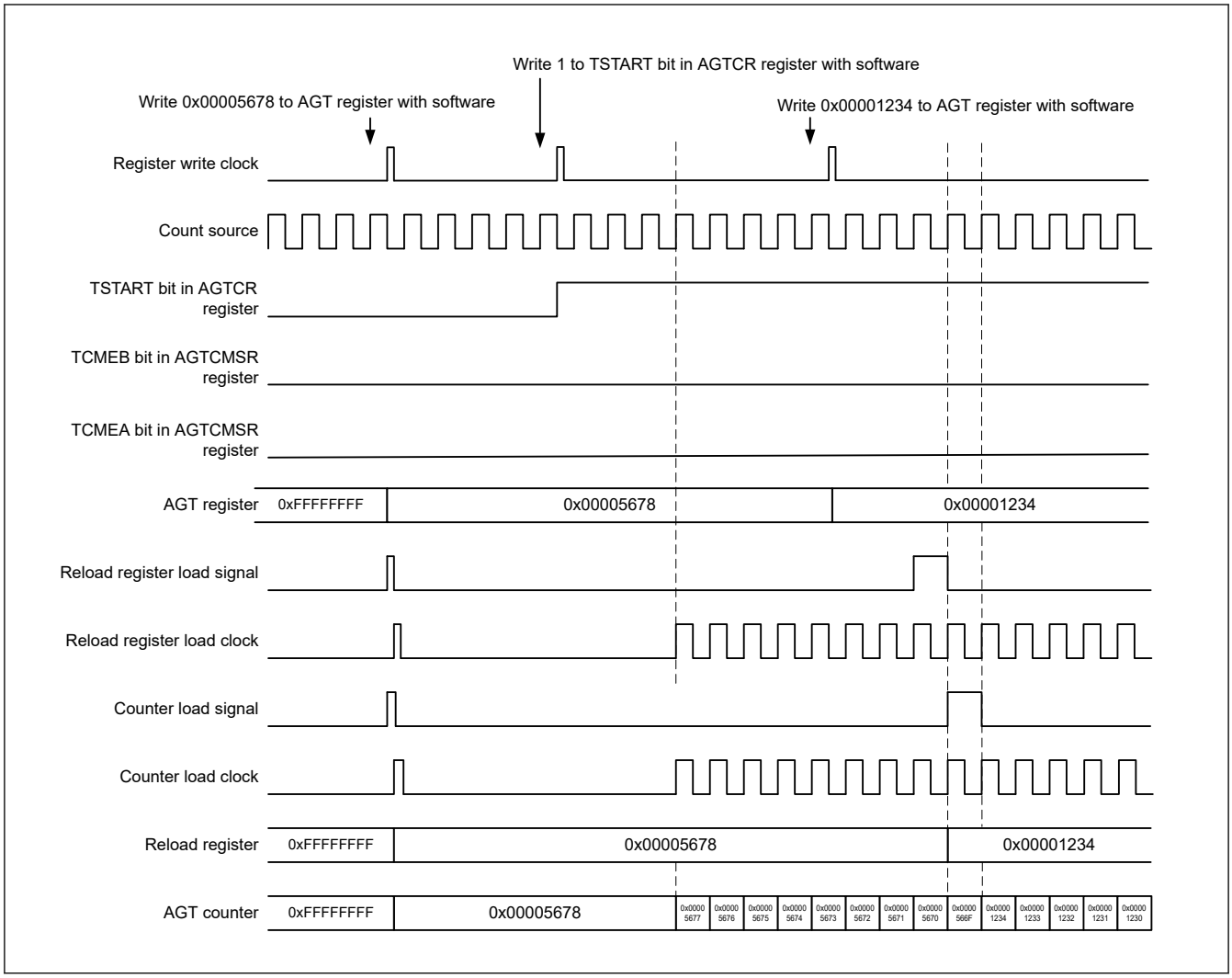

Figure 21.3 Timing of rewrite operation with TSTART, TCMEA, and TCMEB bit value when AGT compare match A register and AGT compare match B register is invalid

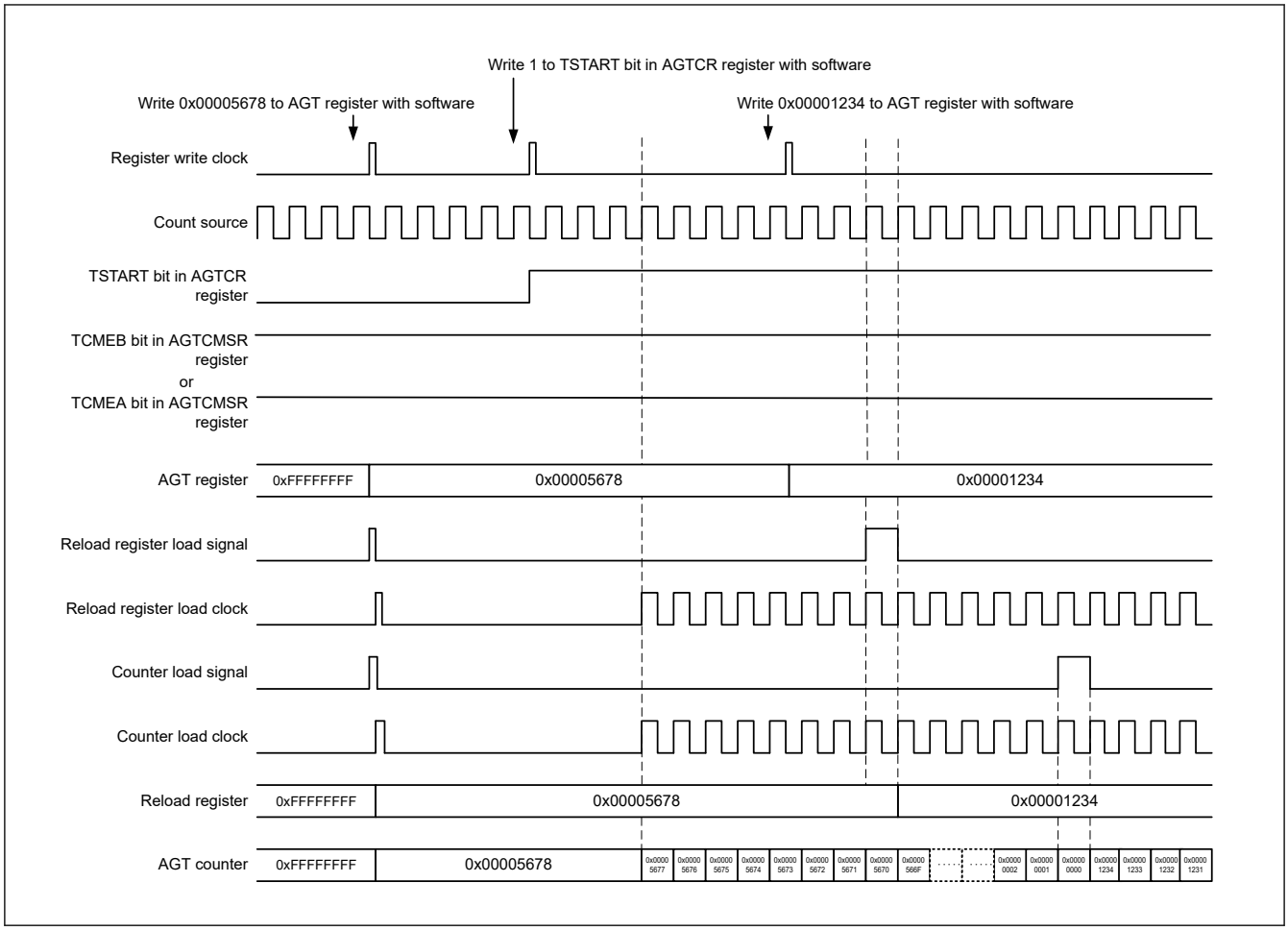

Figure 21.4 Timing of rewrite operation with TSTART bit value and TCMEA or TCMEB bit value when AGT compare match A register or AGT compare match B register is valid

21.3.2 Reload Register and AGT Compare Match A/B Register Rewrite Operation

Regardless of the operating mode, the timing of the rewrite operation to the reload register and AGT compare register A/B depends on the value of the TSTART bit in the AGTCR register. When the TSTART bit is 0 (count stops), the count value is directly written to the reload register and AGT compare register A/B. When the TSTART bit is 1 (count starts), the value is written to the reload register in synchronization with the count source, and then to the compare register in synchronization with the underflow of the counter.

Figure 21.5 shows the timing of rewrite operation with TSTART bit value for compare register A. AGT Compare register B is of the same timing as AGT compare register A.

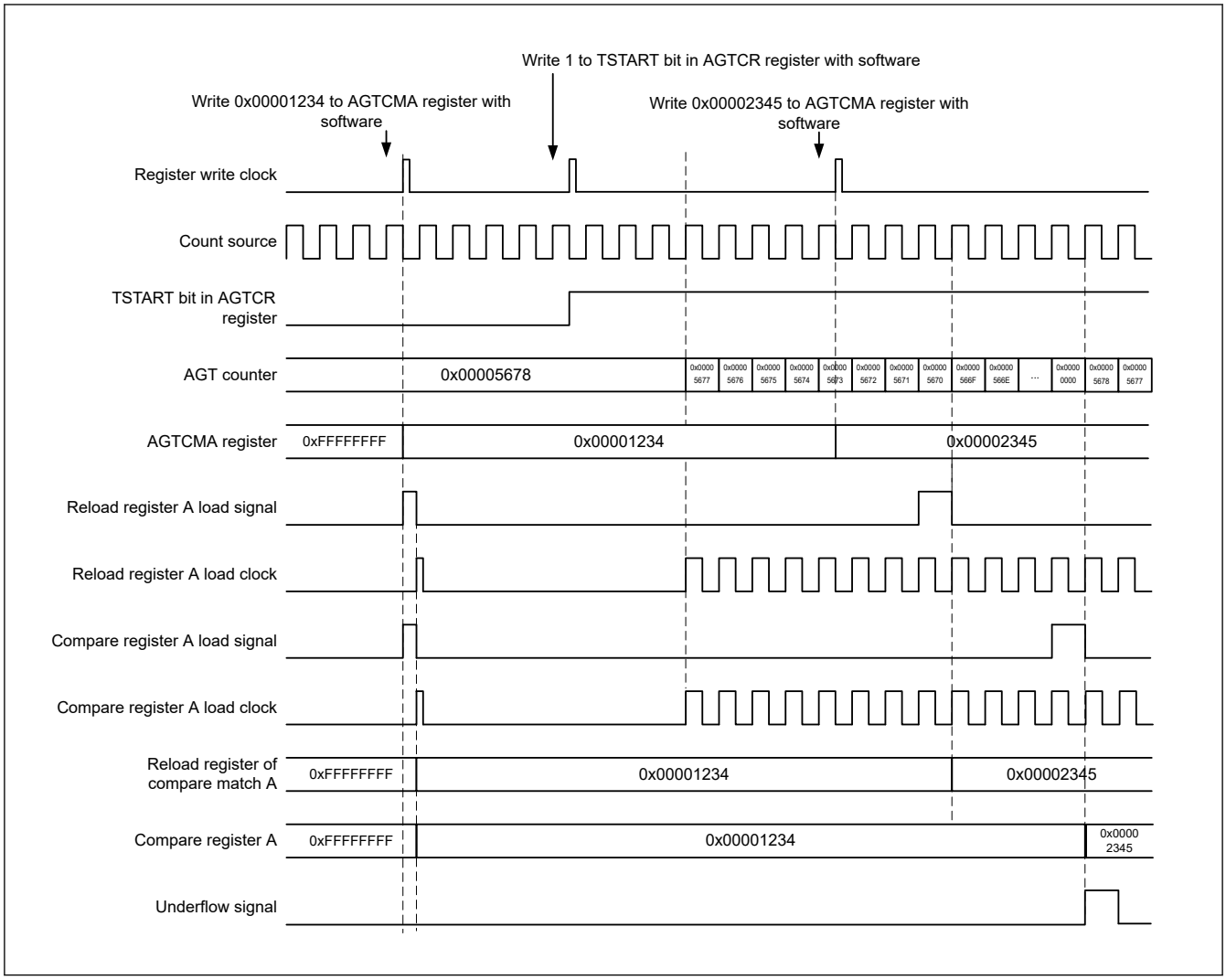

Figure 21.5 Timing of rewrite operation with the TSTART bit value for AGT compare register A

21.3.3 Timer Mode

In this mode, the AGT counter is decremented by the count source selected with the TCK[2:0] bits in the AGTMR1 register. In timer mode, the count value is decremented by 1 on each rising edge of the count source. When the count value reaches 0x00000000 and the next count source is input, an underflow occurs and an interrupt request is generated.

Figure 21.6 shows the operation example in timer mode.

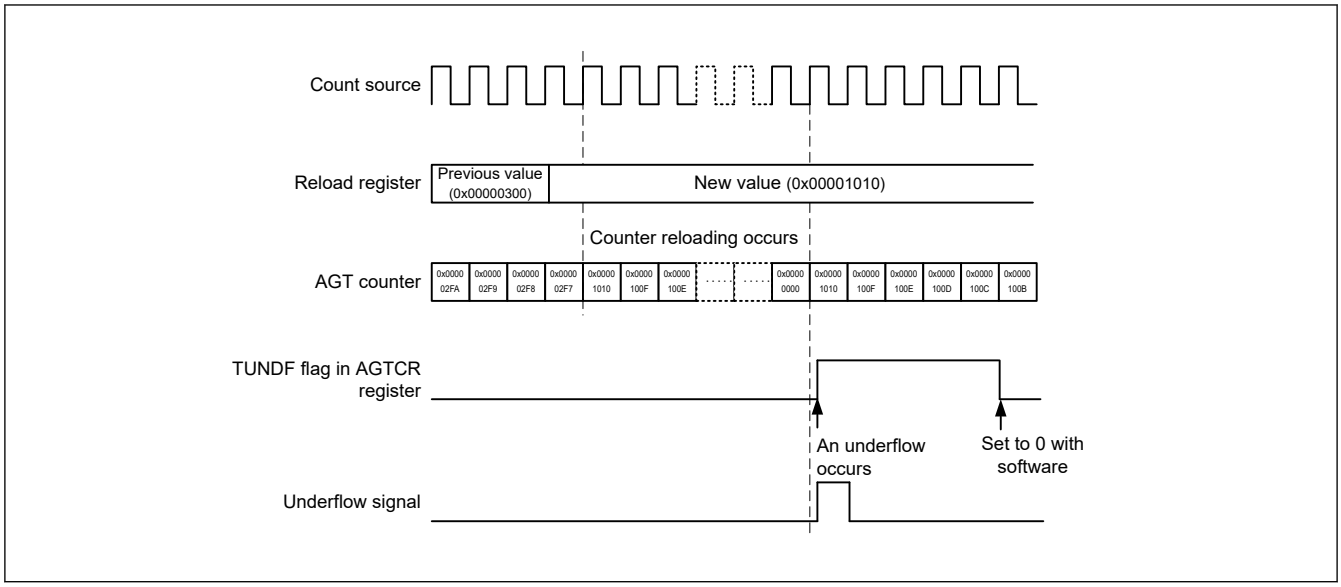

Figure 21.6 Operation example in timer mode

21.3.4 Pulse Output Mode

In pulse output mode, the counter is decremented by the count source selected with the TCK[2:0] bits in the AGTMR1 register, and the output level of the AGTIOn and AGTOn pins inverted each time an underflow occurs.

In pulse output mode, the count value is decremented by 1 on each rising edge of the count source. When the count value reaches 0x00000000 and the next count source is input, an underflow occurs and an interrupt request is generated. In addition, a pulse can be output from the AGTIOn and AGTOn pins. The output level is inverted each time an underflow occurs. The pulse output from the AGTOn pin can be stopped with the TOE bit in the AGTIOC register. The output level can be selected with the TEDGSEL bit in the AGTIOC register.

Figure 21.7 shows the operation example in pulse output mode.

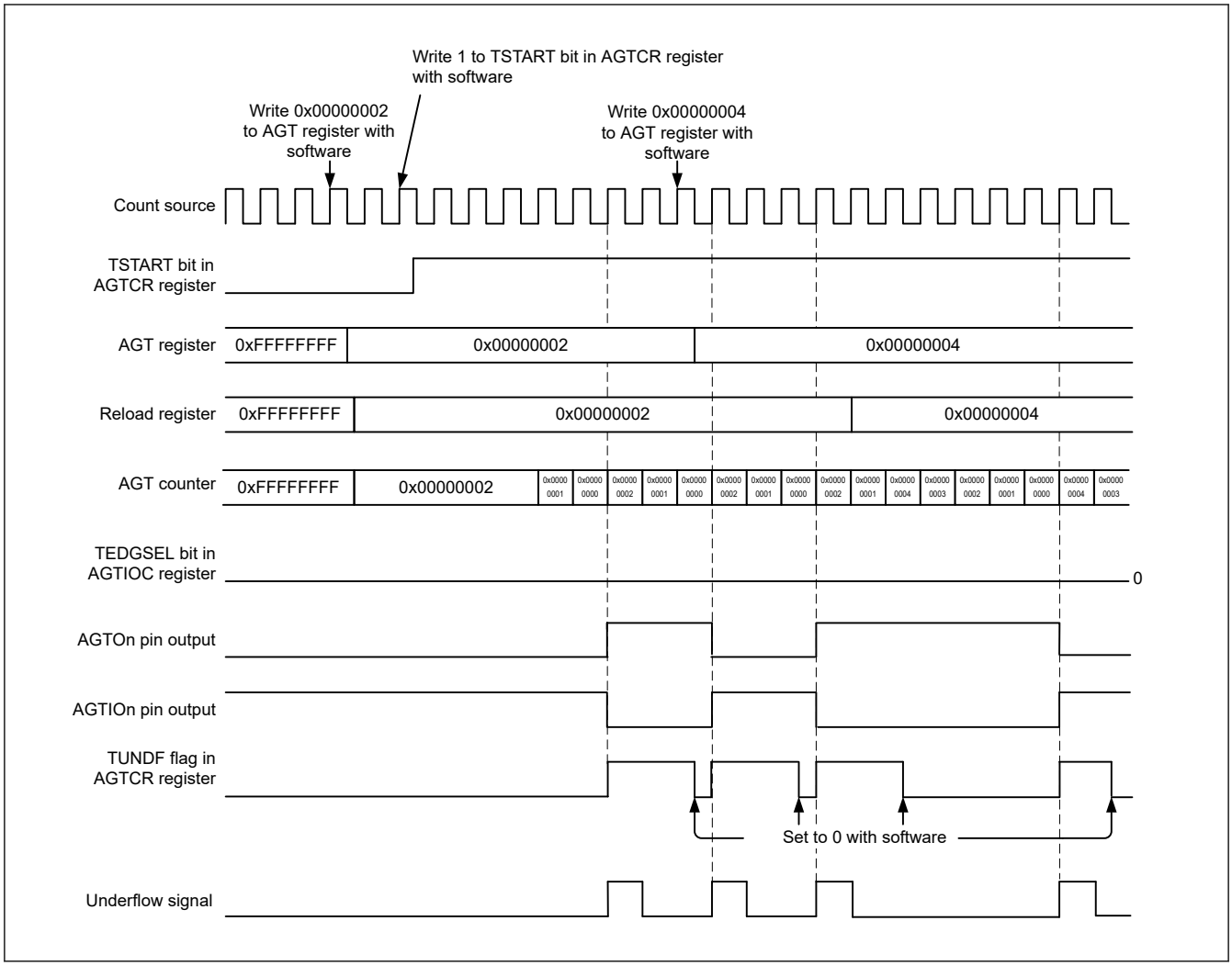

Figure 21.7 Operation example in pulse output mode

21.3.5 Event Counter Mode

In event counter mode, the counter is decremented by an external event signal (count source) input to the AGTIOn pin. Various periods for counting events can be set with the TIOGT[1:0] bits in the AGTIOC register and AGTISR registers. In addition, the filter function for the AGTIOn pin input can be specified with bits TIPF[1:0] in the AGTIOC register. The output from the AGTOn pin can be toggled even in event counter mode.

Figure 21.8 shows the operation example in event counter mode.

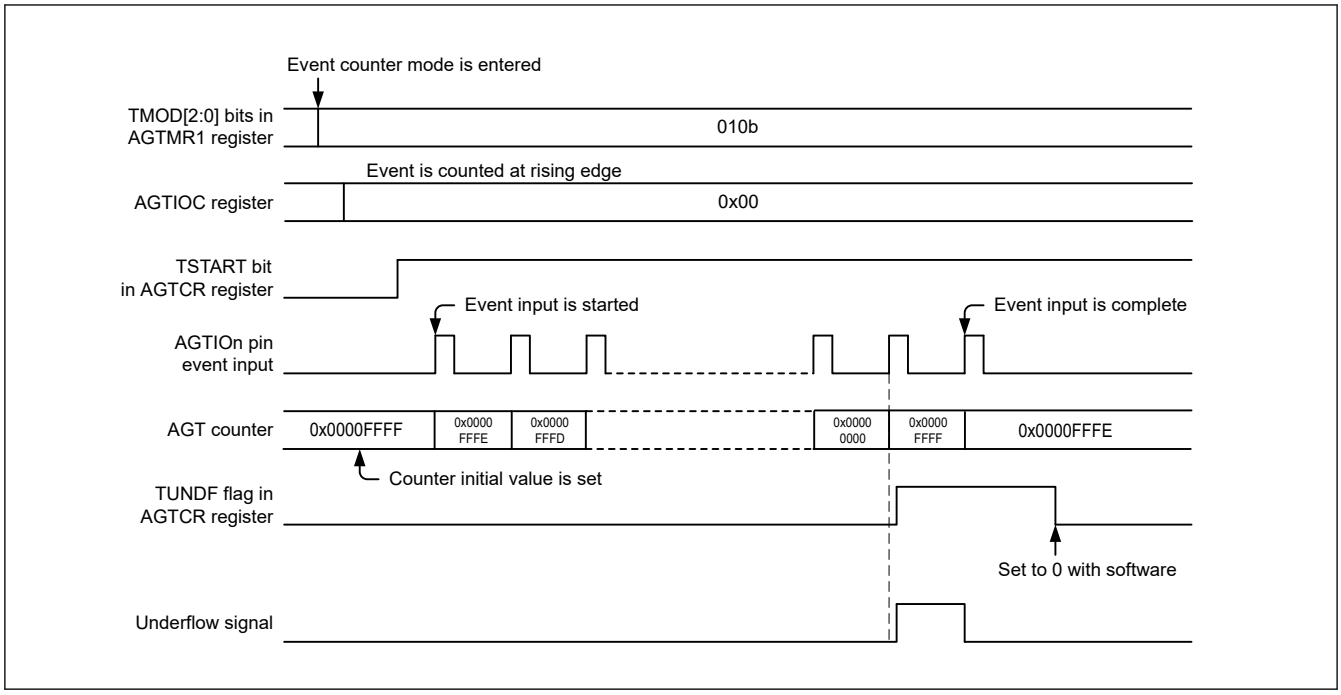

Figure 21.8 Operation example 1 in event counter mode

Figure 21.9 shows an operation example for counting during the specified period in event counter mode (TIOGT[1:0] bits in the AGTIOC register are set to 01b).

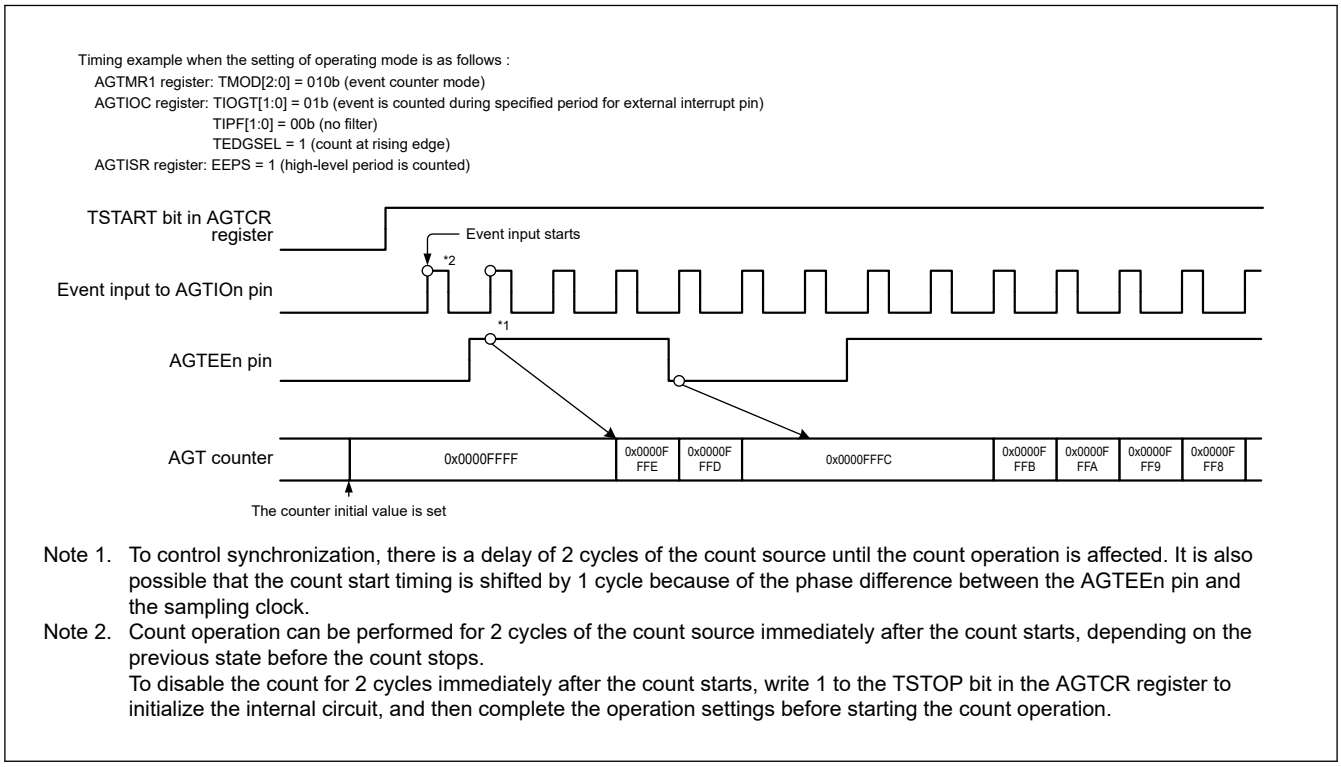

Figure 21.9 Operation example 2 in event counter mode

21.3.6 Pulse Width Measurement Mode

In pulse width measurement mode, the pulse width of an external signal input to the AGTIOn pin is measured. When the level specified by the TEDGSEL bit in the AGTIOC register is input to the AGTIOn pin, the counter is decremented by the count source selected with the TCK[2:0] bits in the AGTMR1 register. When the specified level on the AGTIOn pin ends, the counter is stopped, the TEDGF flag in the AGTCR register is set to 1 (active edge received), and an interrupt request

is generated. The measurement of pulse width data is performed by reading the count value while the counter is stopped. Also, when the counter underflows during measurement, the TUNDF flag in the AGTCR register is set to 1 and an interrupt request is generated.

Figure 21.10 shows the operation example in pulse width measurement mode.

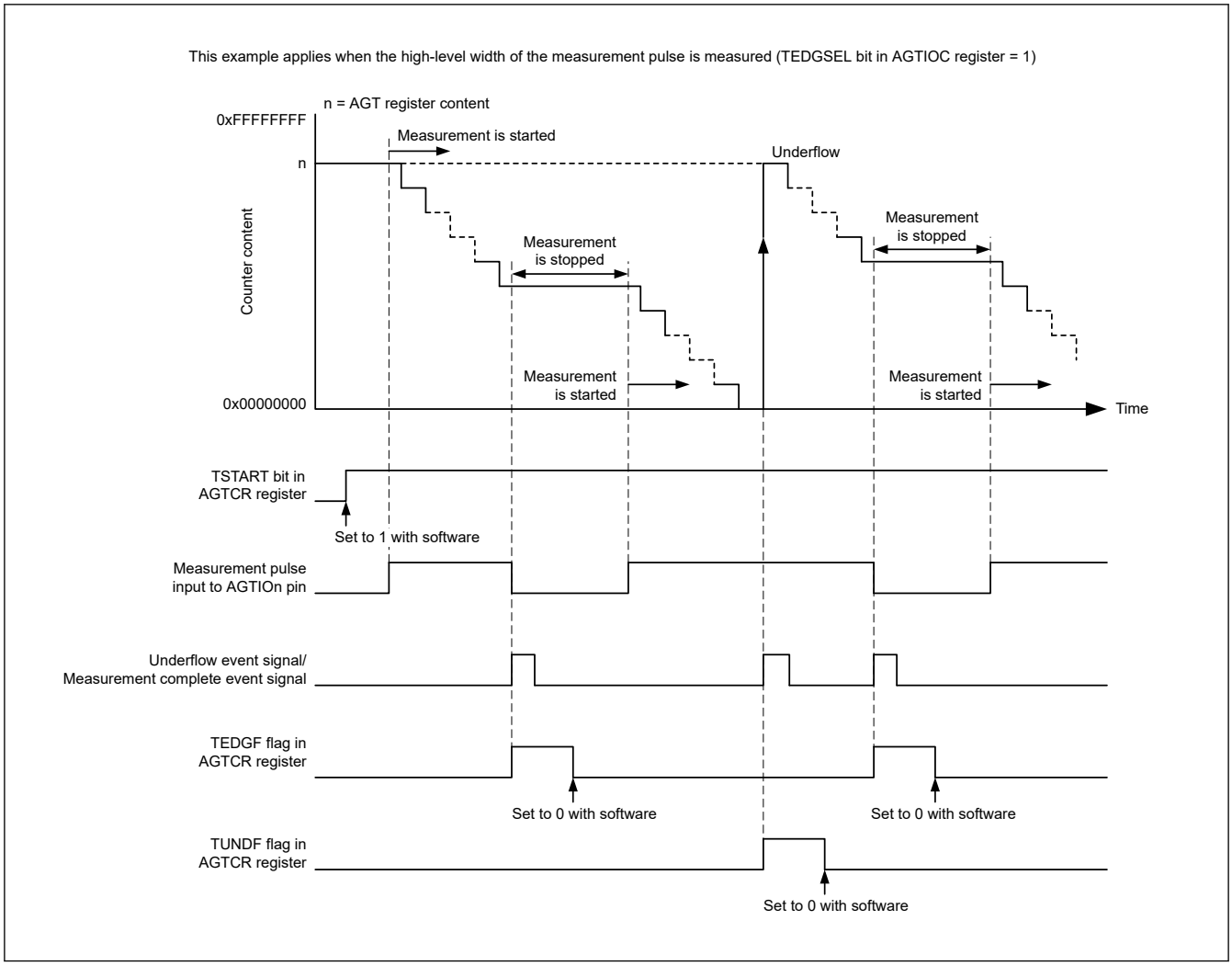

Figure 21.10 Operation example in pulse width measurement mode

21.3.7 Pulse Period Measurement Mode

In pulse period measurement mode, the pulse period of an external signal input to the AGTIOn pin is measured. The counter is decremented by the count source selected with TCK[2:0] bits in the AGTMR1 register. When a pulse with the period specified by the TEDGSEL bit in the AGTIOC register is input to the AGTIOn pin, the count value is transferred to the read-out buffer on the rising edge of the count source. The value in the reload register is loaded to the counter at the next rising edge. Simultaneously, the TEDGF flag in the AGTCR register is set to 1 (active edge received) and an interrupt request is generated. The read-out buffer (AGT register) is read at this time and the difference from the reload value (see section 21.4.6. How to Calculate Event Number, Pulse Width, and Pulse Period) is the period data of the input pulse. The period data is retained until the read-out buffer is read. When the counter underflows, the TUNDF flag in the AGTCR register is set to 1 (underflow) and an interrupt request is generated.

Figure 21.11 shows the operation example in pulse period measurement mode.

Only input pulses with a period longer than twice the period of the count source are measured. Also, the low-level and high-level widths must both be longer than the period of the count source. If a pulse period shorter than these conditions is input, the input might be ignored.

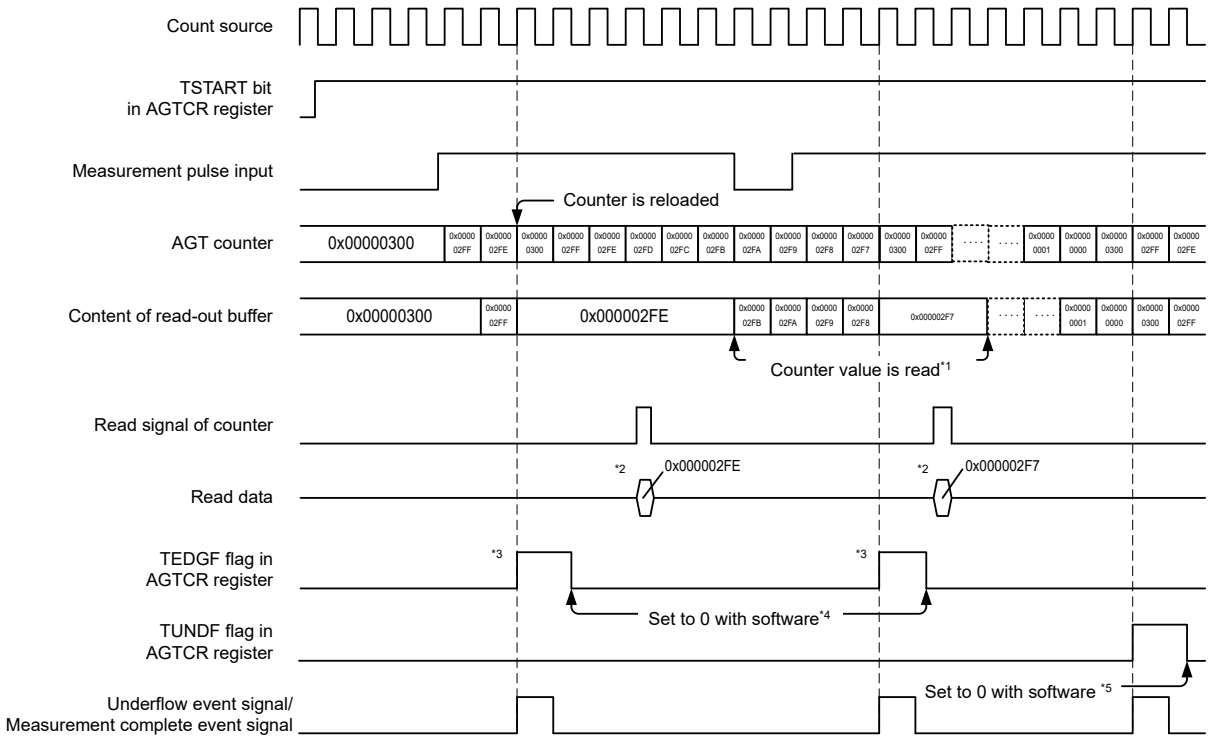

This example applies when the initial value of the AGT register is set to A, the TEDGSEL bit in the AGTIOC register is set to 0, and the period from one rising edge to the next edge of the measurement pulse is measured.

Note 1. Reading from the AGT register must be performed during the period from when the TEDGF flag is set to 1 (active edge received) until the next active edge is input. The content of the read-out buffer is retained until the AGT register is read. If it is not read before the active edge is input, the measurement result of the previous period is retained.
Note 2. When the AGT register is read in pulse period measurement mode, the content of the read-out buffer is read.
Note 3. When the active edge of the measurement pulse is input and then the set edge of an external pulse is input, the TEDGF flag in the AGTCR register is set to 1 (active edge received).
Note 4. To set to 0 with software, write 0 to the TEDGF flag in the AGTCR register with an 8-bit memory manipulation instruction.
Note 5. To set to 0 with software, write 0 to the TUNDF flag in the AGTCR register with an 8-bit memory manipulation instruction.

Figure 21.11 Operation example in pulse period measurement mode

21.3.8 Compare Match function

The compare match function detects matches (compare match) between the content of the AGTCMA or AGTCMB register and the content of the AGT register. This function is enabled when the TCMEA or TCMEB bit in the AGTCMSR register is 1 (compare match A register or compare match B register is valid). The counter is decremented by the count source selected with the TCK[2:0] bits in the AGTMR1 register, and when the values of AGT and AGTCMA or AGTCMB match, the TCMAF/TCMBF flag in the AGTCR register is set to 1 (match), and an interrupt request is generated.

When the compare match function is enabled, the timing of the rewrite operation to the reload register and the counter differs. See section 21.3.1. Reload Register and Counter Rewrite Operation for details. In addition, the output level of the AGTOAn, AGTOBn pins is inverted by the match and by the underflow. The output level can be selected with the TOPOLA or TOPOLB bit in the AGTCMSR register.

Figure 21.12 shows the operation example in compare match function.

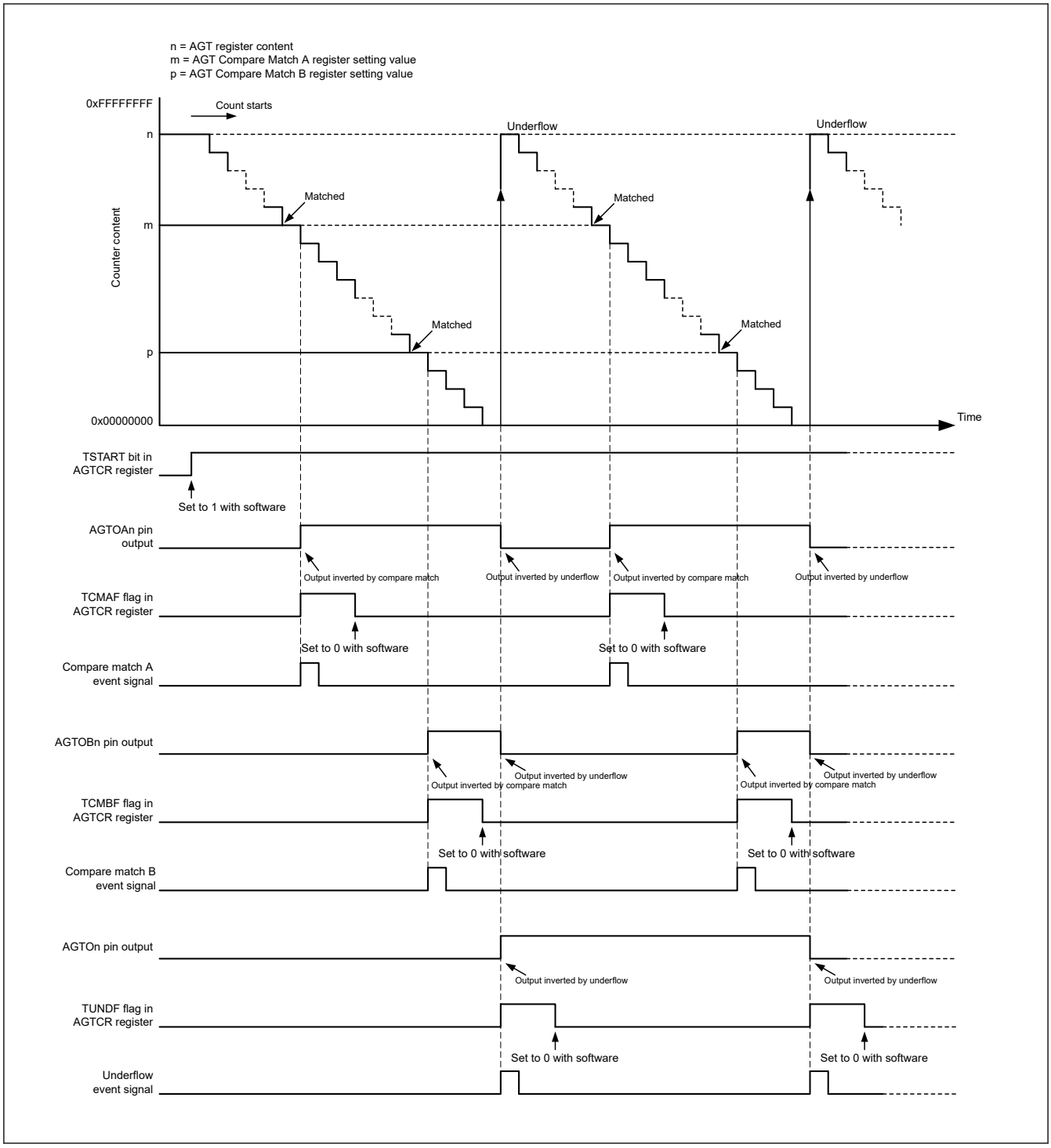

Figure 21.12 Operation example in compare match function (TOPOLA = 0, TOPOLB = 0)

21.3.9 Output Settings for Each Mode

Table 21.5 to Table 21.8 list the states of AGTOn, AGTIOn, AGTOAn, and AGTOBn pins in each mode.

Table 21.5 AGTOn pin setting

Operating mode	AGTIOC register		AGTOn pin output
	TOE bit	TEDGSEL bit	
All modes	1	1	Inverted output
		0	Normal output
	0	0 or 1	Output disabled

Table 21.6 AGTIOn pin setting

Operating mode	AGTIOC register	AGTIOn pin I/O
	TEDGSEL bit	
Timer mode	0 or 1	Input (not used)
Pulse output mode	1	Normal output
	0	Inverted output
Event counter mode	0 or 1	Input
Pulse width measurement mode		
Pulse period measurement mode		

Table 21.7 AGTOAn pin setting

Operating mode	AGTCMSR register		AGTOAn pin output
	TOEA bit	TOPOLA bit	
Timer mode	1	1	Inverted output
		0	Normal output
	0	0 or 1	Output disabled (not used)
Pulse output mode	1	1	Inverted output
		0	Normal output
	0	0 or 1	Output disabled (not used)
Event counter mode	1	1	Inverted output
		0	Normal output
	0	0 or 1	Output disabled (not used)
Pulse width measurement mode	0	0	Prohibited
Pulse period measurement mode			

Table 21.8 AGTOBn pin setting (1 of 2)

Operating mode	AGTCMSR register		AGTOBn pin output
	TOEB bit	TOPOLB bit	
Timer mode	1	1	Inverted output
		0	Normal output
	0	0 or 1	Output disabled (not used)
Pulse output mode	1	1	Inverted output
		0	Normal output
	0	0 or 1	Output disabled (not used)
Event counter mode	1	1	Inverted output
		0	Normal output
	0	0 or 1	Output disabled (not used)

Table 21.8 AGTOBn pin setting (2 of 2)

Operating mode	AGTCMSR register		AGTOBn pin output
	TOEB bit	TOPOLB bit	
Pulse width measurement mode	0	0	Prohibited
Pulse period measurement mode			

21.3.10 Standby Mode

The AGT can operate in Software Standby mode. Set it to Software Standby mode with count operation start (TSTART = 1, TCSTF = 1).

Table 21.9 and Table 21.10 show the setting that can be used in Software Standby mode.

Table 21.9 Usable settings in Software Standby mode (AGT0)

Operating mode	AGTMR1.TCK[2:0]	Operating clock	Resurgence factor of CPU
Timer mode	100b or 110b	AGTLCLK or AGTSCLK	—
Pulse output mode	100b or 110b	AGTLCLK or AGTSCLK	—
Event counter mode*2 *3	—	AGTIOn*1	—
Pulse width measurement mode	100b or 110b	AGTLCLK or AGTSCLK	—
Pulse period measurement mode	100b or 110b	AGTLCLK or AGTSCLK	—

Note: —: invalid
Note 1. When using the AGTIOn pin for external event input in Software Standby mode, set AGTIOSEL.TIES = 1.
Note 2. The AGTEE pin is not available during Software Standby mode. External events are always enabled.
Note 3. When external event input is disabled during Software Standby mode (AGTIOSEL.TIES = 0), stop the count operation before entering Software Standby mode. Then, restart the count operation after returning from Software Standby mode.

Table 21.10 Usable settings in Software Standby mode (AGT1)

Operating mode	AGTMR1.TCK[2:0]	Operating clock	Resurgence factor of CPU
Timer mode	100b or 110b or 101b*1	AGTLCLK or AGTSCLK or AGT0 underflow	• Underflow • Compare match A/B
Pulse output mode	100b or 110b or 101b*1	AGTLCLK or AGTSCLK or AGT0 underflow	• Underflow • Compare match A/B
Event counter mode*3 *4	—	AGTIOn*2	• Underflow • Compare match A/B
Pulse width measurement mode	100b or 110b or 101b*1	AGTLCLK or AGTSCLK or AGT0 underflow	• Underflow • Active edge
Pulse period measurement mode	100b or 110b or 101b*1	AGTLCLK or AGTSCLK or AGT0 underflow	• Underflow • Active edge

Note: —: invalid
Note: Release of Software Standby mode is only AGT1.
Note: Compare match A/B is resurgence factor of CPU from Software Standby mode.
Note 1. Only when AGT0 operates in Table 21.9
Note 2. When using the AGTIOn pin for external event input in Software Standby mode, set AGTIOSEL.TIES = 1.
Note 3. The AGTEE pin is not available during Software Standby mode. External events are always enabled.
Note 4. When external event input is disabled during Software Standby mode (AGTIOSEL.TIES = 0), stop the count operation before entering Software Standby mode. Then, restart the count operation after returning from Software Standby mode.

21.3.11 Interrupt Sources

The AGTn has three interrupt sources as listed in Table 21.11.

Table 21.11 AGT interrupt sources

Name	Interrupt source	DMAC/DTC activation
AGTn_AGTI	• When the counter underflows • When measurement of the active width of the external input pin (AGTIOn) is complete in pulse width measurement mode • When the set edge of the external input pin (AGTIOn) is input in pulse period measurement mode.	Possible
AGTn_AGTCMAI	• When the values of AGT register and AGTCMA register match	Possible
AGTn_AGTCMBI	• When the values of AGT register and AGTCMB register match	Possible

Note: Channel number (n = 0, 1)

21.3.12 Event Signal Output to ELC

The AGTn (n = 0, 1) uses the Event Link Controller (ELC) to perform a link operation to a specified module using the interrupt request signal as the event signal. The AGTn (n = 0, 1) outputs compare match A, compare match B, and underflow/measurement complete signals as event signals. For details, see section 17, Event Link Controller (ELC).

21.4 Usage Notes

21.4.1 Count Operation Start and Stop Control

- When the operating mode (see Table 21.1) is set to other than the event counter mode, or the count source is set to other than AGTn underflow event signal (TCK[2:0] = 101b):
  - After 1 (count starts) is written to the TSTART bit in the AGTCR register while the count is stopped, the TCSTF flag in the AGTCR register remains 0 (count stops) for 3 cycles of the count source. Do not access the registers associated with AGT other than the TCSTF flag until this flag is set to 1 (count in progress).
  - After 0 (count stops) is written to the TSTART bit during a count operation, the TCSTF flag remains 1 for 3 cycles of the count source. When the TCSTF flag is set to 0, the count is stopped. Do not access the registers associated with AGT other than the TCSTF flag until this flag is set to 0.
- When the operating mode (see Table 21.1) is set to event counter mode, or the count source is set to AGT1 underflow event signal (TCK[2:0] = 101b):
  - After 1 (count starts) is written to the TSTART bit in the AGTCR register while the count is stopped, the TCSTF flag in the AGTCR register remains 0 (count stops) for 2 PCLKB cycles. Do not access the registers associated with AGT other than the TCSTF flag until this flag is set to 1 (count in progress).
  - After 0 (count stops) is written to the TSTART bit during a count operation, the TCSTF flag remains 1 for 2 PCLKB cycles. When the TCSTF flag is set to 0, the count is stopped. Do not access the registers associated with AGT other than the TCSTF flag until this flag is set to 0.

21.4.2 Access to Counter Register

When the TSTART bit and TCSTF flag in the AGTCR register are both 1 (count starts), allow at least 3 cycles of the count source clock between writes when writing to the AGT register successively.

21.4.3 When Changing Mode

The registers associated with AGT operating mode (AGTMR1, AGTMR2, AGTIOC, AGTISR, and AGTCMSR) can be changed only when the count is stopped with both the TSTART bit and TCSTF flag set to 0 (count stops). Do not change these registers during count operation.

When the registers associated with AGT operating mode are changed, the values of TEDGF, TUNDF, TCMAF, and TCMBF flags are undefined. Before starting the count, write 0 to the following flags:

- TEDGF (no active edge received)
- TUNDF (no underflow)
- TCMAF (no match)
- TCMBF (no match).

21.4.4 Output pin setting

When using the AGTOn, AGTIOn, AGTOAn, or AGTOBn as an output pin, set up the Operation and determine the initial output values. Then set an output mode in the port register.

When using the AGTIOn as an input pin in pulse width measurement mode or pulse period measurement mode, set up the Operation and start count operation. Then start to enter external events from the AGTIOn pin. Invalidate the first measurement and validate the second and later completed measurements.

21.4.5 Digital Filter

When using the digital filter, do not start the timer operation for 5 cycles of the digital filter clock after setting TIPF[1:0] bits and when the TEDGSEL bit in the AGTIOC register changes.

21.4.6 How to Calculate Event Number, Pulse Width, and Pulse Period

- In event counter mode, event number is expressed mathematically as follows:
  Event number = initial value of counter [AGT register] - counter value of active event end
- In pulse width measurement mode, pulse width is expressed mathematically as follows:
  Pulse width = counter value of stopping measurement - counter value of next stopping measurement
- In pulse period measurement mode, input pulse period is expressed mathematically as follows:
  Period of input pulse = (initial value of counter [AGT register] - reading value of the read-out buffer) + 1.

21.4.7 When Count is Forcibly Stopped by TSTOP Bit

After the counter is forcibly stopped by the TSTOP bit in the AGTCR register, do not access the following I/O registers for 1 cycle of the count source:

- AGT
- AGTCMA
- AGTCMB
- AGTCR
- AGTMR1
- AGTMR2.

21.4.8 When Selecting AGT0 Underflow as the Count Source

Operate according to the following procedures described in this section when selecting the underflow event signal as the count source.

(1) Procedure for starting operation

1. Set AGT.
2. Start the count operation of AGT1.
3. Start the count operation of AGT0.

(2) Procedure for stopping operation

1. Stop the count operation of AGT0.
2. Stop the count operation of AGT1.
3. Stop the count source clock of AGT1 (write 000b in the AGTMR1.TCK[2:0] bits).

21.4.9 Module-stop function

AGT operation can be disabled or enabled using Module Stop Control Register D (MSTPCRD). The AGT module is initially stopped after reset. Releasing the module-stop state enables access to the registers. For details, see section 10, Low Power Modes

21.4.10 When Switching Source Clock

When switching a clock source by changing SCKSCR.CKSEL[2:0], the clock output from the selector stops for 4 cycles of the switched clock. Therefore, when using the AGTIOn, AGTEEn, or both input as external event input, the clock source should not be switched. If switching the clock source while using the external event input, extend the input pulse width by 4 clock cycles of the switched source clock cycles.

22. Realtime Clock (RTC)

22.1 Overview

The RTC (RTCA) has three operation modes, Normal operation mode (NOR mode), Low power consumption clock mode (LPC mode), and High precision mode (HP mode). The RTC has two counting modes, calendar count mode and binary count mode, that are used by switching register settings. For calendar count mode, the RTC has a 100-year calendar from 2000 AD to 2099 and automatically adjusts dates for leap years.

For binary count mode, the RTC counts seconds and retains the information as a serial value. Binary count mode can be used for calendars other than the Gregorian (Western) calendar. Clock operation continues even if this module is reset during clock operation.

In NOR mode and HP mode, the RTC uses a 128-Hz clock acquired by dividing the sub-clock oscillator by a prescaler. Year, month, date, day-of-week, a.m./p.m. (in 12-hour mode), hour, minute, second, or 32-bit binary is counted by 1/128 second.

In LPC mode, a 128-Hz clock from the sub-clock oscillator acts as the count source of the time counters. Year, month, date, day-of-week, a.m. /p.m. (in 12-hour mode), hour, minute, second, or 32-bit binary is counted by 1/128 second.

Table 22.1 lists the RTC specifications, Figure 22.1 shows a block diagram, and Table 22.2 lists the I/O pins.

Table 22.1 RTC specifications (1 of 2)

Parameter	Specifications
Count mode	Calendar count mode/binary count mode
Count source*1 *4	• Sub-clock (XCIN) (NOR mode) • Sub-clock (XCIN) (HP mode) • 128 Hz from sub-clock (XCIN) (LPC mode)
Clock and calendar functions	• Calendar count mode – Year, month, date, day of week, hour, minute, second are counted, BCD display – 12 hours/24 hours mode switching function – 30 seconds adjustment function (a number less than 30 is rounded down to 00 seconds, and 30 seconds or more are rounded up to 1 minute) – Automatic adjustment function for leap years • Binary count mode – Count seconds in 32 bits, binary display • Shared by both modes – Start/stop function – The sub-second digit is displayed in binary units (1 Hz, 2 Hz, 4 Hz, 8 Hz, 16 Hz, 32 Hz, or 64 Hz) – Clock error correction function (NOR mode/HP mode) • Minimum correction amount = 1 cycle of 32 kHz clock • Automatic adjustment, Adjustment by software – Clock error correction function (LPC mode) • Minimum correction amount = 1 cycle of 128 Hz clock • Automatic adjustment – Clock (1-Hz/64-Hz) output – 1 Hz output with high precision (HP mode)
Interrupts	• Alarm interrupt (RTC_ALM) – As an alarm interrupt condition, selectable for comparison with the following: – Calendar count mode: Year, month, date, day-of-week, hour, minute, or second can be selected – Binary count mode: Each bit of the 32-bit binary counter • Periodic interrupt (RTC_PRD) – 2 seconds, 1 second, 1/2 second, 1/4 second, 1/8 second, 1/16 second, 1/32 second, 1/64 second*2, 1/128 second*2, or 1/256 second*2 can be selected as an interrupt period. • Carry interrupt (RTC_CUP) – An interrupt is generated at either of the following conditions: • When a carry from the 64-Hz counter to the second counter is generated. • When the 64-Hz counter is changed and the R64CNT register is read at the same time. (32-KHz count mode is only for 64-Hz counter reading) • Return from Software Standby mode can be performed by the alarm interrupt or periodic interrupt

Table 22.1 RTC specifications (2 of 2)

Parameter	Specifications
Time capture function	● Times can be captured when the edge of the time capture event input pin is detected. For every event input, month, date, hour, minute, and second are captured or the 32-bit binary counter value is captured. ● Interrupt can be generated when the edge of the time capture event input is detected. The time capture event input pin and IRQ are shared.
Event link function	Periodic event output (RTC_PRD)*2 *3
TrustZone filter	Security attribution can be set

Note 1. The frequency of the peripheral module clock (PCLKB) ≥ the frequency of the count source should be satisfied.
Note 2. Not supported in LPC mode.
Note 3. Only when both VCC and VRTC are supplied.
Note 4. Sub-clock oscillator runs on the VRTC power-supply. It can operate after release from the RTC power-on reset following the power supply to the VRTC pin being turned on. If the VRTC power-supply stops, an RTC power-on reset is generated and sub-clock oscillator stops.

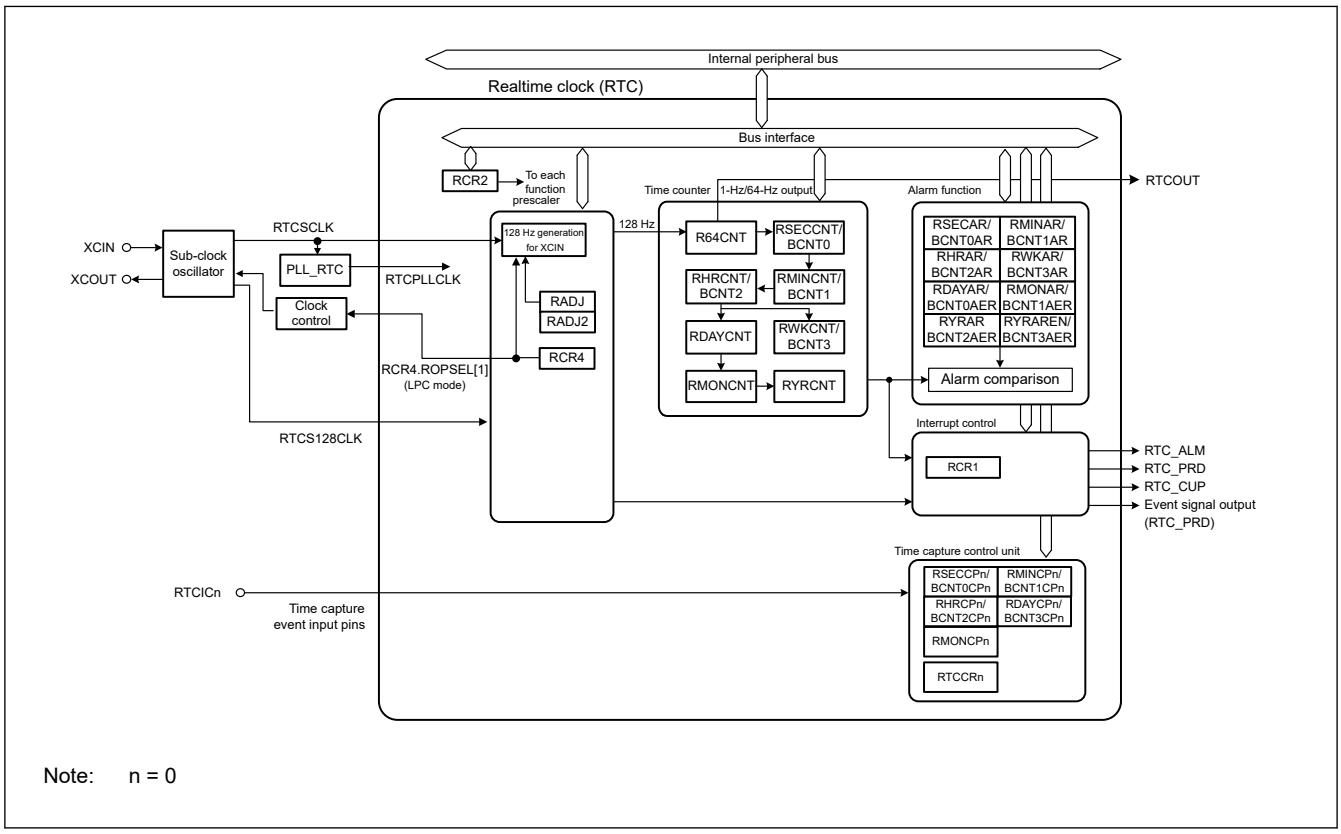

Figure 22.1 RTC block diagram

Table 22.2 RTC I/O pins

Pin name	I/O	Description
XCIN	Input	Connect a 32.768-kHz crystal to these pins
XCOUT	Output	
RTCOUT	Output	This pin is used to output a 1-Hz/64-Hz waveform
RTCIC0	Input	Time capture event input pins

22.2 Register Descriptions

Write or read from the RTC registers as described in section 22.6.5. Notes on Writing to and Reading from Registers.

If the value in an RTC register after a reset is given as x (undefined bits) in the list, it is not initialized by a reset. When RTC enters the reset state or a low power state during counting operations, for example, while the RCR2.START bit is 1, the year, month, day of the week, date, hours, minutes, seconds, and 64-Hz counters continue to operate.

Note: A reset generated while writing to a register might destroy the register value. In addition, do not allow the MCU to enter Software Standby mode immediately after setting any of these registers. For details, see section 22.6.4. Transitions to Low Power Modes after Setting Registers.

Table 22.3 shows the power domains in which the RTC registers exist and their values after reset.

Table 22.3 Registers that Control the RTC (1 of 2)

SFR name	Bit name	Power domain	VRTC domain power-on reset	After MCU reset		RTC software reset
				Power-on reset	Reset other than VRTC_POR*1	
R64CNT	—	VRTC	Undefined	—	—	0x00
RSECCNT/ BCNT0	—	VRTC	Undefined	—	—	—
RMINCNT/ BCNT1	—	VRTC	Undefined	—	—	—
RHRCNT/ BCNT2	—	VRTC	Undefined	—	—	—
RWKCNT/ BCNT3	—	VRTC	Undefined	—	—	—
RDAYCNT	—	VRTC	Undefined	—	—	—
RMONCNT	—	VRTC	Undefined	—	—	—
RYRCNT	—	VRTC	Undefined	—	—	—
RSECARn / BCNT0ARn (n = 0, 1)	—	VRTC	Undefined	—	—	0x00
RMINARn / BCNT1ARn (n = 0, 1)	—	VRTC	Undefined	—	—	0x00
RHRARn / BCNT2ARn (n = 0, 1)	—	VRTC	Undefined	—	—	0x00
RWKARn / BCNT3ARn (n = 0, 1)	—	VRTC	Undefined	—	—	0x00
RDAYARn / BCNT0AERn (n = 0, 1)	—	VRTC	Undefined	—	—	0x00
RMONARn / BCNT1AERn (n = 0, 1)	—	VRTC	Undefined	—	—	0x00
RYRARn / BCNT2AERn (n = 0, 1)	—	VRTC	Undefined	—	—	0x0000
RYRARENn / BCNT3AERn (n = 0, 1)	—	VRTC	Undefined	—	—	0x00
RCR1	AIE	VRTC	Undefined	—	—	—
	CIE	VCC	—	0	0	—
	PIE	VRTC	Undefined	—	—	—
	RTCOS	VCC	—	0	0	—
	PES	VRTC	Undefined	—	—	—

Table 22.3 Registers that Control the RTC (2 of 2)

SFR name	Bit name	Power domain	VRTC domain power-on reset	After MCU reset		RTC software reset
				Power-on reset	Reset other than VRTC_POR*1	
RCR2	START	VRTC	Undefined	—	—	—
	RESET	VCC	—	0	0	—
	ADJ30	VCC	—	0	0	0
	RTCOE	VCC	—	0	0	—
	AADJE	VRTC	Undefined	—	—	0
	AADJP	VRTC	Undefined	—	—	0
	HR24	VRTC	Undefined	—	—	—
	CNTMD	VRTC	Undefined	—	—	—
RCR4	RCKSEL	VRTC	Undefined	—	—	—
	RTCOHP	VCC	—	0	0	—
	ROPSEL	VRTC	Undefined	—	—	—
RADJ	—	VRTC	Undefined	—	—	0x0000
RADJ2	—	VRTC	Undefined	—	—	0x0000
RTCCR0	—	VRTC	Undefined	—	—	0x00
RSECCP0 / BCNT0CP	—	VRTC	Undefined	—	—	0x00
RMINCP0 / BCNT1CP	—	VRTC	Undefined	—	—	0x00
RHRCP0 / BCNT2CP	—	VRTC	Undefined	—	—	0x00
RDAYCP0 / BCNT3CP	—	VRTC	Undefined	—	—	0x00
RMONCP0	—	VRTC	Undefined	—	—	0x00

Note 1. See section 5, Resets for the reset factors.

22.2.1 R64CNT : 64-Hz Counter

Base address: RTC = 0x4008_3000

Offset address: 0x00

Bit position:	7	6	5	4	3	2	1	0
Bit field:	R64OVF	F1HZ	F2HZ	F4HZ	F8HZ	F16HZ	F32HZ	F64HZ
Value after reset:	x	x	x	x	x	x	x	x

Bit	Symbol	Function	R/W
0	F64HZ	64-Hz Flag This bit indicates the 64-Hz state of the sub-second digit.	R
1	F32HZ	32-Hz Flag This bit indicates the 32-Hz state of the sub-second digit.	R
2	F16HZ	16-Hz Flag This bit indicates the 16-Hz state of the sub-second digit.	R
3	F8HZ	8-Hz Flag This bit indicates the 8-Hz state of the sub-second digit.	R
4	F4HZ	4-Hz Flag This bit indicates the 4-Hz state of the sub-second digit.	R

Bit	Symbol	Function	R/W
5	F2HZ	2-Hz Flag This bit indicates the 2-Hz state of the sub-second digit.	R
6	F1HZ	1-Hz Flag This bit indicates the 1-Hz state of the sub-second digit.	R
7	R64OVF	This bit indicates the overflow of F1HZ only when using time error adjustment function in LPC mode.	R

The R64CNT counter is used in both calendar count mode and binary count mode, under two operation modes. The 64-Hz counter (R64CNT) generates the period for a second by counting up periods of the 128-Hz clock. The state in the sub-second range can be confirmed by reading this counter.

This counter is set to 0x00 by an RTC software reset or an execution of a 30-second adjustment. To read this counter, follow the procedure in section 22.3.5. Reading 64-Hz Counter and Time.

22.2.2 RSECCNT : Second Counter (in Calendar Count Mode)

Base address: RTC = 0x4008_3000

Offset address: 0x02

Bit position:	7	6	5	4	3	2	1	0
Bit field:	—	SEC10[2:0]			SEC1[3:0]			
Value after reset:	x	x	x	x	x	x	x	x

Bit	Symbol	Function	R/W
3:0	SEC1[3:0]	1-Second Count Counts from 0 to 9 every second. When a carry is generated, 1 is added to the tens place.	R/W
6:4	SEC10[2:0]	10-Second Count Counts from 0 to 5 for 60-second counting.	R/W
7	—	The read value is undefined. The write value should be 0.	R/W

The RSECCNT counter sets and counts the BCD-coded second value. It counts the carries generated once per second in the 64-Hz counter.

The setting range is decimal 00 to 59. The RTC does not operate normally if any other value is set. Before writing to this register, you must stop the count operation using the START bit in RCR2.

To read this counter, follow the procedure in section 22.3.5. Reading 64-Hz Counter and Time.

22.2.3 RMINCNT : Minute Counter (in Calendar Count Mode)

Base address: RTC = 0x4008_3000

Offset address: 0x04

Bit position:	7	6	5	4	3	2	1	0
Bit field:	—	MIN10[2:0]			MIN1[3:0]			
Value after reset:	x	x	x	x	x	x	x	x

Bit	Symbol	Function	R/W
3:0	MIN1[3:0]	1-Minute Count Counts from 0 to 9 every minute. When a carry is generated, 1 is added to the tens place.	R/W
6:4	MIN10[2:0]	10-Minute Count Counts from 0 to 5 for 60-minute counting.	R/W
7	—	The read value is undefined. The write value should be 0.	R/W

The RMINCNT counter sets and counts the BCD-coded minute value. It counts the carries generated once every minute in the second counter.

A value from 00 through 59 (in BCD) can be specified. If a value outside of this range is specified, the RTC does not operate correctly. Before writing to this register, you must stop the count operation using the START bit in RCR2. To read this counter, follow the procedure in section 22.3.5. Reading 64-Hz Counter and Time.

22.2.4 RHRCNT : Hour Counter (in Calendar Count Mode)

Base address: RTC = 0x4008_3000

Offset address: 0x06

Bit position:	7	6	5	4	3	2	1	0
Bit field:	—	PM	HR10[1:0]		HR1[3:0]			
Value after reset:	x	x	x	x	x	x	x	x

Bit	Symbol	Function	R/W
3:0	HR1[3:0]	1-Hour Count Counts from 0 to 9 once per hour. When a carry is generated, 1 is added to the tens place.	R/W
5:4	HR10[1:0]	10-Hour Count Counts from 0 to 2 once per carry from the ones place.	R/W
6	PM	AM/PM select for time counter setting. 0: AM 1: PM	R/W
7	—	The read value is undefined. The write value should be 0.	R/W

The RHRCNT counter sets and counts the BCD-coded hour value. It counts the carries generated once per hour in the minute counter. The specifiable time differs based on the setting in the hours mode bit (RCR2.HR24):

- When the RCR2.HR24 bit is 0 – from 00 to 11 (in BCD).
- When the RCR2.HR24 bit is 1 – from 00 to 23 (in BCD).

If a value outside of this range is specified, the RTC does not operate correctly. Before writing to this register, you must stop the count operation using the START bit in RCR2. The PM bit is only enabled when the RCR2.HR24 bit is 0.

Otherwise, the setting in the PM bit has no effect. To read this counter, follow the procedure in section 22.3.5. Reading 64-Hz Counter and Time.

22.2.5 RWKCNT : Day-of-Week Counter (in Calendar Count Mode)

Base address: RTC = 0x4008_3000

Offset address: 0x08

Bit position:	7	6	5	4	3	2	1	0
Bit field:	—	—	—	—	—	DAYW[2:0]		
Value after reset:	x	x	x	x	x	x	x	x

Bit	Symbol	Function	R/W
2:0	DAYW[2:0]	Day-of-Week Counting 0 0 0: Sunday 0 0 1: Monday 0 1 0: Tuesday 0 1 1: Wednesday 1 0 0: Thursday 1 0 1: Friday 1 1 0: Saturday 1 1 1: Setting prohibited	R/W
7:3	—	The read values are undefined. The write value should be 0.	R/W

The RWKCNT counter sets and counts in the coded day-of-week value. It counts the carries generated once per day in the hour counter. A value from 0 through 6 can be specified. If a value outside of this range is specified, the RTC does not operate correctly. Before writing to this register, you must stop the count operation using the START bit in RCR2. To read this counter, follow the procedure in section 22.3.5. Reading 64-Hz Counter and Time.

22.2.6 BCNTn : Binary Counter n (n = 0 to 3) (in Binary Count Mode)

Base address: RTC = 0x4008_3000

Offset address: 0x02 + 0x02 × n

Bit position:	7	6	5	4	3	2	1	0
Bit field:	BCNT[7:0]							
Value after reset:	x	x	x	x	x	x	x	x

Bit	Symbol	Function	R/W
7:0	BCNT[7:0]	Binary Counter	R/W

BCNTn is a read/write 8-bit register to access BCNT[31:0] that is a 32-bit binary counter. BCNT3 is assigned to the BCNT[31:24] bits, BCNT2 is assigned to the BCNT[23:16] bits, BCNT1 is assigned to the BCNT[15:8] bits, and BCNT0 is assigned to the BCNT[7:0] bits. BCNTn performs count operation by a carry generated for each second of the 64-Hz counter. Before writing to this register, you must stop the count operation using the START bit in RCR2. To read this counter, follow the procedure in section 22.3.5. Reading 64-Hz Counter and Time.

22.2.7 RDAYCNT : Day Counter

Base address: RTC = 0x4008_3000

Offset address: 0x0A

Bit position:	7	6	5	4	3	2	1	0
Bit field:	—	—	DATE10[1:0]		DATE1[3:0]			
Value after reset:	0	0	x	x	x	x	x	x

Bit	Symbol	Function	R/W
3:0	DATE1[3:0]	1-Day Count Counts from 0 to 9 once per day. When a carry is generated, 1 is added to the tens place.	R/W
5:4	DATE10[1:0]	10-Day Count Counts from 0 to 3 once per carry from the ones place.	R/W
7:6	—	These bits are read as 0. The write value should be 0.	R/W

The RDAYCNT counter is used in calendar count mode to set and count the BCD-coded date value. It counts the carries generated once per day in the hour counter. The count operation depends on the month and whether the year is a leap year. Leap years are determined according to whether the year counter (RYRCNT) value is divisible by 400, 100, and 4.

A value from 01 through 31 (in BCD) can be specified. If a value outside of this range is specified, the RTC does not operate correctly. When specifying a value, the range of specifiable days depends on the month and whether the year is a leap year. Before writing to this register, you must stop the count operation using the START bit in RCR2. To read this counter, follow the procedure in section 22.3.5. Reading 64-Hz Counter and Time.

22.2.8 RMONCNT : Month Counter

Base address: RTC = 0x4008_3000

Offset address: 0x0C

Bit position:	7	6	5	4	3	2	1	0
Bit field:	—	—	—	MON10	MON1[3:0]			
Value after reset:	0	0	0	x	x	x	x	x

Bit	Symbol	Function	R/W
3:0	MON1[3:0]	1-Month Count Counts from 0 to 9 once per month. When a carry is generated, 1 is added to the tens place.	R/W
4	MON10	10-Month Count Counts from 0 to 1 once per carry from the ones place.	R/W
7:5	—	These bits are read as 0. The write value should be 0.	R/W

The RMONCNT counter is used in calendar count mode to set and count the BCD-coded month value. It counts the carries generated once per month in the date counter.

A value from 01 through 12 (in BCD) can be specified. If a value outside of this range is specified, the RTC does not operate correctly. Before writing to this register, you must stop the count operation using the START bit in RCR2. To read this counter, follow the procedure in section 22.3.5. Reading 64-Hz Counter and Time.

22.2.9 RYRCNT : Year Counter

Base address: RTC = 0x4008_3000

Offset address: 0x0E

Bit position:	15	14	13	12	11	10	9	8	7	6	5	4	3	2	1	0
Bit field:	—	—	—	—	—	—	—	—	YR10[3:0]				YR1[3:0]			
Value after reset:	0	0	0	0	0	0	0	0	x	x	x	x	x	x	x	x

Bit	Symbol	Function	R/W
3:0	YR1[3:0]	1-Year Count Counts from 0 to 9 once per year. When a carry is generated, 1 is added to the tens place.	R/W
7:4	YR10[3:0]	10-Year Count Counts from 0 to 9 once per carry from ones place. When a carry is generated in the tens place, 1 is added to the hundreds place.	R/W
15:8	—	These bits are read as 0. The write value should be 0.	R/W

The RYRCNT counter is used in calendar count mode to set and count the BCD-coded year value. It counts the carries generated once per year in the month counter.

A value from 00 through 99 (in BCD) can be specified. If a value outside of this range is specified, the RTC does not operate correctly. Before writing to this register, you must stop the count operation using the START bit in RCR2. To read this counter, follow the procedure in section 22.3.5. Reading 64-Hz Counter and Time.

22.2.10 RSECAR : Second Alarm Register (in Calendar Count Mode)

Base address: RTC = 0x4008_3000

Offset address: 0x10

Bit position:	7	6	5	4	3	2	1	0
Bit field:	ENB	SEC10[2:0]			SEC1[3:0]			
Value after reset:	x	x	x	x	x	x	x	x

Bit	Symbol	Function	R/W
3:0	SEC1[3:0]	1 Second Value for the ones place of seconds.	R/W
6:4	SEC10[2:0]	10 Seconds Value for the tens place of seconds.	R/W
7	ENB	ENB 0: Do not compare register value with RSECCNT counter value 1: Compare register value with RSECCNT counter value	R/W

RSECAR is an alarm register associated with the BCD-coded second counter RSECCNT. When the ENB bit is set to 1, the RSECAR value is compared with the RSECCNT value. From the following alarm registers, only those selected with the ENB bits set to 1 are compared with the associated counters:

- RSECAR
- RMINAR
- RHRAR
- RWKAR
- RDAYAR
- RMONAR
- RYRAREN

When all the respective values match, the IR flag associated with the RTC_ALM interrupt is set to 1. RSECAR values from 00 through 59 (in BCD) can be specified. If a value outside of this range is specified, the RTC does not operate correctly. This register is set to 0x00 by an RTC software reset.

22.2.11 RMINAR : Minute Alarm Register (in Calendar Count Mode)

Base address: RTC = 0x4008_3000

Offset address: 0x12

Bit position:	7	6	5	4	3	2	1	0
Bit field:	ENB	MIN10[2:0]			MIN1[3:0]			
Value after reset:	x	x	x	x	x	x	x	x

Bit	Symbol	Function	R/W
3:0	MIN1[3:0]	1 Minute Value for the ones place of minutes.	R/W
6:4	MIN10[2:0]	10 Minutes Value for the tens place of minutes.	R/W
7	ENB	ENB 0: Do not compare register value with RMINCNT counter value 1: Compare register value with RMINCNT counter value	R/W

RMINAR is an alarm register associated with the BCD-coded minute counter RMINCNT. When the ENB bit is set to 1, the RMINAR value is compared with the RMINCNT value. From the following alarm registers, only those selected with the ENB bits set to 1 are compared with the associated counters:

- RSECAR
- RMINAR
- RHRAR
- RWKAR
- RDAYAR
- RMONAR
- RYRAREN

When all the respective values match, the IR flag associated with the RTC_ALM interrupt is set to 1. RMINAR values from 00 through 59 (in BCD) can be specified. If a value outside of this range is specified, the RTC does not operate correctly. This register is set to 0x00 by an RTC software reset.

22.2.12 RHRAR : Hour Alarm Register (in Calendar Count Mode)

Base address: RTC = 0x4008_3000

Offset address: 0x14

Bit position:	7	6	5	4	3	2	1	0
Bit field:	ENB	PM	HR10[1:0]		HR1[3:0]			
Value after reset:	x	x	x	x	x	x	x	x

Bit	Symbol	Function	R/W
3:0	HR1[3:0]	1 Hour Value for the ones place of hours.	R/W
5:4	HR10[1:0]	10 Hours Value for the tens place of hours.	R/W
6	PM	AM/PM select for alarm setting. 0: AM 1: PM	R/W
7	ENB	ENB 0: Do not compare register value with RHRCNT counter value 1: Compare register value with RHRCNT counter value	R/W

RHRAR is an alarm register associated with the BCD-coded hour counter RHRCNT. When the ENB bit is set to 1, the RHRAR value is compared with the RHRCNT value. From the following alarm registers, only those selected with the ENB bits set to 1 are compared with the associated counters:

- RSECAR
- RMINAR
- RHRAR
- RWKAR
- RDAYAR
- RMONAR
- RYRAREN

When all the respective values match, the IR flag associated with the RTC_ALM interrupt is set to 1. The specifiable time differs according to the setting in the hours mode bit (RCR2.HR24):

- When the RCR2.HR24 bit is 0 – From 00 to 11 (in BCD).

- When the RCR2.HR24 bit is 1 – From 00 to 23 (in BCD).

If a value outside of this range is specified, the RTC does not operate correctly. When the RCR2.HR24 bit is 0, you must set the PM bit. When the RCR2.HR24 bit is 1, the setting in the PM bit has no effect. This register is set to 0x00 by an RTC software reset.

22.2.13 RWKAR : Day-of-Week Alarm Register (in Calendar Count Mode)

Base address: RTC = 0x4008_3000

Offset address: 0x16

Bit position:	7	6	5	4	3	2	1	0
Bit field:	ENB	—	—	—	—	DAYW[2:0]		
Value after reset:	x	x	x	x	x	x	x	x

Bit	Symbol	Function	R/W
2:0	DAYW[2:0]	Day-of-Week Setting 0 0 0: Sunday 0 0 1: Monday 0 1 0: Tuesday 0 1 1: Wednesday 1 0 0: Thursday 1 0 1: Friday 1 1 0: Saturday 1 1 1: Setting prohibited	R/W
6:3	—	The read values are undefined. The write value should be 0.	R/W
7	ENB	ENB 0: Do not compare register value with RWKCNT counter value 1: Compare register value with RWKCNT counter value	R/W

RWKAR is an alarm register associated with the coded day-of-week counter RWKCNT. When the ENB bit is set to 1, the RWKAR value is compared with the RWKCNT value. From the following alarm registers, only those selected with the ENB bits set to 1 are compared with the associated counters:

- RSECAR
- RMINAR
- RHRAR
- RWKAR
- RDAYAR
- RMONAR
- RYRAREN

When all the respective values match, the IR flag associated with the RTC_ALM interrupt is set to 1. RWKAR values from 0 through 6 (in BCD) can be specified. If a value outside of this range is specified, the RTC does not operate correctly. This register is set to 0x00 by an RTC software reset.

22.2.14 BCNTnAR : Binary Counter n Alarm Register (n = 0 to 3) (in Binary Count Mode)

Base address: RTC = 0x4008_3000

Offset address: 0x10 + 0x02 × n

Bit position:	7	6	5	4	3	2	1	0
Bit field:	BCNTAR							
Value after reset:	x	x	x	x	x	x	x	x

Bit	Symbol	Function	R/W
7:0	BCNTAR	Alarm register associated with the 32-bit binary counter	R/W

BCNTnAR is a read/write alarm register associated with the 32-bit binary counter. BCNT3AR is assigned to the BCNTAR[31:24] bits, BCNT2AR is assigned to the BCNTAR[23:16] bits, BCNT1AR is assigned to the BCNTAR[15:8] bits, and BCNT0AR is assigned to the BCNTAR[7:0]. This register is set to 0x00 by an RTC software reset.

22.2.15 RDAYAR : Date Alarm Register (in Calendar Count Mode)

Base address: RTC = 0x4008_3000

Offset address: 0x18

Bit position:	7	6	5	4	3	2	1	0
Bit field:	ENB	—	DATE10[1:0]		DATE1[3:0]			
Value after reset:	x	x	x	x	x	x	x	x

Bit	Symbol	Function	R/W
3:0	DATE1[3:0]	1 Day Value for the ones place of days.	R/W
5:4	DATE10[1:0]	10 Days Value for the tens place of days.	R/W
6	—	The read value is undefined. The write value should be 0.	R/W
7	ENB	ENB 0: Do not compare register value with RDAYCNT counter value 1: Compare register value with RDAYCNT counter value	R/W

RDAYAR is an alarm register associated with the BCD-coded date counter RDAYCNT. When the ENB bit is set to 1, the RDAYAR value is compared with the RDAYCNT value. From the following alarm registers, only those selected with the ENB bits set to 1 are compared with the associated counters:

- RSECAR
- RMINAR
- RHRAR
- RWKAR
- RDAYAR
- RMONAR
- RYRAREN

When all the respective values match, the IR flag associated with the RTC_ALM interrupt is set to 1. The RDAYAR values from 01 through 31 (in BCD) can be specified. If a value outside of this range is specified, the RTC does not operate correctly. This register is set to 0x00 by an RTC software reset.

22.2.16 RMONAR : Month Alarm Register (in Calendar Count Mode)

Base address: RTC = 0x4008_3000

Offset address: 0x1A

Bit position:	7	6	5	4	3	2	1	0
Bit field:	ENB	—	—	MON10	MON1[3:0]			
Value after reset:	x	x	x	x	x	x	x	x

Bit	Symbol	Function	R/W
3:0	MON1[3:0]	1 Month Value for the ones place of months.	R/W
4	MON10	10 Months Value for the tens place of months.	R/W
6:5	—	The read values are undefined. The write value should be 0.	R/W
7	ENB	ENB 0: Do not compare register value with RMONCNT counter value 1: Compare register value with RMONCNT counter value	R/W

RMONAR is an alarm register associated with the BCD-coded month counter RMONCNT. When the ENB bit is set to 1, the RMONAR value is compared with the RMONCNT value. From the following alarm registers, only those selected with the ENB bits set to 1 are compared with the associated counters:

- RSECAR
- RMINAR
- RHRAR
- RWKAR
- RDAYAR
- RMONAR
- RYRAREN

When all the respective values match, the IR flag associated with the RTC_ALM interrupt is set to 1. The RMONAR values from 01 through 12 (in BCD) can be specified. If a value outside of this range is specified, the RTC does not operate correctly. This register is set to 0x00 by an RTC software reset.

22.2.17 RYRAR : Year Alarm Register (in Calendar Count Mode)

Base address: RTC = 0x4008_3000

Offset address: 0x1C

Bit position:	15	14	13	12	11	10	9	8	7	6	5	4	3	2	1	0
Bit field:	—	—	—	—	—	—	—	—	YR10[3:0]				YR1[3:0]			
Value after reset:	0	0	0	0	0	0	0	0	x	x	x	x	x	x	x	x

Bit	Symbol	Function	R/W
3:0	YR1[3:0]	1 Year Value for the ones place of years.	R/W
7:4	YR10[3:0]	10 Years Value for the tens place of years.	R/W
15:8	—	These bits are read as 0. The write value should be 0.	R/W

RYRAR is an alarm register associated with the BCD-coded year counter RYRCNT. The RYRAR values from 00 through 99 (in BCD) can be specified. If a value outside of this range is specified, the RTC does not operate correctly. This register is set to 0x0000 by an RTC software reset.

22.2.18 RYRAREN : Year Alarm Enable Register (in Calendar Count Mode)

Base address: RTC = 0x4008_3000

Offset address: 0x1E

Bit position:	7	6	5	4	3	2	1	0
Bit field:	ENB	—	—	—	—	—	—	—
Value after reset:	x	x	x	x	x	x	x	x

Bit	Symbol	Function	R/W
6:0	—	The read values are undefined. The write value should be 0.	R/W
7	ENB	ENB 0: Do not compare register value with the RYRCNT counter value 1: Compare register value with the RYRCNT counter value	R/W

When the ENB bit in the RYRAREN register is set to 1, the RYRAR value is compared with the RYRCNT value. From the following alarm registers, only those selected with the ENB bits set to 1 are compared with the associated counters:

- RSECAR
- RMINAR
- RHRAR
- RWKAR
- RDAYAR
- RMONAR
- RYRAREN

When all the respective values match, the IR flag associated with the RTC_ALM interrupt is set to 1. This register is set to 0x00 by an RTC software reset.

22.2.19 BCNTnAER : Binary Counter n Alarm Enable Register (n = 0, 1) (in Binary Count Mode)

Base address: RTC = 0x4008_3000

Offset address: 0x18 + 0x02 × n

Bit position:	7	6	5	4	3	2	1	0
Bit field:	ENB[7:0]							
Value after reset:	x	x	x	x	x	x	x	x

Bit	Symbol	Function	R/W
7:0	ENB[7:0]	Setting the alarm enable associated with the 32-bit binary counter	R/W

BCNTnAER is a read/write register for setting the alarm enable (BCNTAER) associated with the 32-bit binary counter. BCNT3AER is assigned to the BCNTAER.ENB[31:24] bits, BCNT2AER register is assigned to the BCNTAER.ENB[23:16] bits, BCNT1AER is assigned to the BCNTAER.ENB[15:8] bits, and BCNT0AER is assigned to the BCNTAER.ENB[7:0] bits. The binary counter (BCNT[31:0]) associated with the BCNTAER.ENB[31:0] bits that are set to 1 is compared with the binary alarm register (BCNTAR) and, when all match, the IR flag associated with the RTC_ALM interrupt is set to 1. This register is set to 0x00 by an RTC software reset.

22.2.20 BCNT2AER : Binary Counter 2 Alarm Enable Register (in Binary Count Mode)

Base address: RTC = 0x4008_3000

Offset address: 0x1C

Bit position:	15	14	13	12	11	10	9	8	7	6	5	4	3	2	1	0
Bit field:	—	—	—	—	—	—	—	—	ENB[7:0]							
Value after reset:	0	0	0	0	0	0	0	0	x	x	x	x	x	x	x	x

Bit	Symbol	Function	R/W
7:0	ENB[7:0]	Setting the alarm enable associated with the 32-bit binary counter	R/W
15:8	—	These bits are read as 0. The write value should be 0.	R/W

BCNT2AER is a read/write register for setting the alarm enable (BCNTAER) associated with the 32-bit binary counter. BCNT3AER is assigned to the BCNTAER.ENB[31:24] bits, BCNT2AER register is assigned to the BCNTAER.ENB[23:16] bits, BCNT1AER is assigned to the BCNTAER.ENB[15:8] bits, and BCNT0AER is assigned to the BCNTAER.ENB[7:0] bits. The binary counter (BCNT[31:0]) associated with the BCNTAER.ENB[31:0] bits that are set to 1 is compared with the binary alarm register (BCNTAR) and, when all match, the IR flag associated with the RTC_ALM interrupt is set to 1. This register is set to 0x00 by an RTC software reset.

22.2.21 BCNT3AER : Binary Counter 3 Alarm Enable Register (in Binary Count Mode)

Base address: RTC = 0x4008_3000

Offset address: 0x1E

Bit position:	7	6	5	4	3	2	1	0
Bit field:	ENB[7:0]							
Value after reset:	x	x	x	x	x	x	x	x

Bit	Symbol	Function	R/W
7:0	ENB[7:0]	Setting the alarm enable associated with the 32-bit binary counter	R/W

BCNT3AER is a read/write register for setting the alarm enable (BCNTAER) associated with the 32-bit binary counter. BCNT3AER is assigned to the BCNTAER.ENB[31:24] bits, BCNT2AER register is assigned to the BCNTAER.ENB[23:16] bits, BCNT1AER is assigned to the BCNTAER.ENB[15:8] bits, and BCNT0AER is assigned to the BCNTAER.ENB[7:0] bits. The binary counter (BCNT[31:0]) associated with the BCNTAER.ENB[31:0] bits that are set to 1 is compared with the binary alarm register (BCNTAR) and, when all match, the IR flag associated with the RTC_ALM interrupt is set to 1. This register is set to 0x00 by an RTC software reset.

22.2.22 RCR1 : RTC Control Register 1

Base address: RTC = 0x4008_3000

Offset address: 0x22

Bit position:	7	6	5	4	3	2	1	0
Bit field:	PES[3:0]				RTCOS	PIE	CIE	AIE
Value after reset:	x	x	x	x	0	x	0	x

Bit	Symbol	Function	R/W
0	AIE	Alarm Interrupt Enable 0: Disable alarm interrupt requests 1: Enable alarm interrupt requests	R/W

Bit	Symbol	Function	R/W
1	CIE	Carry Interrupt Enable 0: Disable carry interrupt requests 1: Enable carry interrupt requests	R/W
2	PIE	Periodic Interrupt Enable 0: Disable periodic interrupt requests 1: Enable periodic interrupt requests	R/W
3	RTCOS	RTCOUT Output Select 0: Outputs 1 Hz on RTCOUT 1: Outputs 64 Hz RTCOUT	R/W
7:4	PES[3:0]	Periodic Interrupt Select 0x6: Generate periodic interrupt every 1/256 second*1 0x7: Generate periodic interrupt every 1/128 second*1 0x8: Generate periodic interrupt every 1/64 second*1 0x9: Generate periodic interrupt every 1/32 second 0xA: Generate periodic interrupt every 1/16 second 0xB: Generate periodic interrupt every 1/8 second 0xC: Generate periodic interrupt every 1/4 second 0xD: Generate periodic interrupt every 1/2 second 0xE: Generate periodic interrupt every 1 second 0xF: Generate periodic interrupt every 2 seconds Others: Do not generate periodic interrupts	R/W

Note 1. Not supported when RTC is in LPC mode. No periodic interrupts are generated if RTC is in this setting.

The RCR1 register is used in both calendar count mode and binary count mode, under two operation modes. Bits AIE, PIE, and PES[3:0] are updated synchronously with the count source. When the RCR1 register is modified, check that all the bits are updated before proceeding.

AIE bit (Alarm Interrupt Enable)

The AIE bit enables or disables alarm interrupt requests.

CIE bit (Carry Interrupt Enable)

The CIE bit enables or disables interrupt requests when a carry to the RSECCNT/BCNT0 register occurs, or when a carry to the 64-Hz counter (R64CNT) occurs while reading the 64-Hz counter.

PIE bit (Periodic Interrupt Enable)

The PIE bit enables or disabled a periodic interrupt.

RTCOS bit (RTCOUT Output Select)

The RTCOS bit selects the RTCOUT output period. The RTCOS bit must be rewritten while the count operation is stopped (RCR2.START = 0) and the RTCOUT output is disabled (RCR2.RTCOE = 0). When RTCOUT is output to an external pin, the RCR2.RTCOE bit must be enabled.

PES[3:0] bits (Periodic Interrupt Select)

The PES[3:0] bits specify the period for the periodic interrupt. A periodic interrupt is generated with the period specified in these bits.

22.2.23 RCR2 : RTC Control Register 2 (in Calendar Count Mode)

Base address: RTC = 0x4008_3000

Offset address: 0x24

Bit position:	7	6	5	4	3	2	1	0
Bit field:	CNTMD	HR24	AADJP	AADJE	RTCOE	ADJ30	RESET	START
Value after reset:	x	x	x	x	0	0	0	x

Bit	Symbol	Function	R/W
0	START*2	Start 0: Stop prescaler and time counter 1: Operate prescaler and time counter normally	R/W
1	RESET	RTC Software Reset 0: In writing: Invalid (writing 0 has no effect). In reading: Normal time operation in progress, or an RTC software reset has completed. 1: In writing: Initialize the prescaler and target registers for RTC software reset*1. In reading: RTC software reset in progress.	R/W
2	ADJ30	30-Second Adjustment 0: In writing: Invalid (writing 0 has no effect). In reading: Normal time operation in progress, or 30-second adjustment has completed. 1: In writing: Execute 30-second adjustment. In reading: 30-second adjustment in progress.	R/W
3	RTCOE	RTCOUT Output Enable 0: Disable RTCOUT output 1: Enable RTCOUT output	R/W
4	AADJE	Automatic Adjustment Enable*3 0: Disable automatic adjustment 1: Enable automatic adjustment	R/W
5	AADJP	Automatic Adjustment Period Select*3 0: In NOR mode, adjust RADJ.ADJ[6:0] setting from the count value of the prescaler every minute. In LPC mode, adjust RADJ.ADJ[6:0] setting from the count value of the 64-Hz counter every day. 1: In NOR mode, adjust RADJ.ADJ[6:0] setting from the count value of the prescaler every 10 seconds. In LPC mode, adjust RADJ.ADJ[6:0] setting from the count value of the 64-Hz counter every hour.	R/W
6	HR24	Hours Mode*3 0: Operate RTC in 12-hour mode 1: Operate RTC in 24-hour mode	R/W
7	CNTMD	Count Mode Select*4 0: Calendar count mode 1: Binary count mode	R/W

Note 1. R64CNT, RSECAR, RMINAR, RHRAR, RWKAR, RDAYAR, RMONAR, RYRAR, RYRAREN, RADJ, RADJ2, RTCCR0, RSECCPn, RMINCPn, RHRCPn, RDAYCPn, RMONCPn, RCR2.ADJ30, RCR2.AADJE, RCR2.AADJP.
Note 2. The prescaler operates only in NOR mode, and no prescaler operates in LPC mode.
Note 3. When rewriting this bit, confirm that the value has been rewritten before performing the following processing. See section 22.6.5. Notes on Writing to and Reading from Registers for notes on register writing/reading.
Note 4. When rewriting this bit, confirm that the value has been rewritten before performing the following processing.

The RCR2 register is related to hours mode, automatic adjustment function, enabling RTCOUT output, 30-second adjustment, RTC software reset, and controlling count operation.

START bit (Start)

The START bit stops or restarts the prescaler or time counter operation. This bit is updated in synchronization with the next cycle of the count source. When the START bit is modified, check that the bit is updated before proceeding.

RESET bit (RTC Software Reset)

The RESET bit initializes the prescaler and registers to be reset by RTC software. When 1 is written to this bit, initialization starts in synchronization with the count source. When the initialization is complete, the RESET bit is automatically set to 0. Check that this bit is 0 before proceeding.

ADJ30 bit (30-Second Adjustment)

The ADJ30 bit is for 30-second adjustment.

When 1 is written to the ADJ30 bit, the RSECCNT value of less than 30 seconds is rounded down to 00 second and the value of 30 seconds or more is rounded up to 1 minute.

The 30-second adjustment is performed in synchronization with the count source. When 1 is written to this bit, the ADJ30 bit is automatically set to 0 after the 30-second adjustment completes. If 1 is written to the ADJ30 bit, check that the bit is 0 before proceeding. When the 30-second adjustment is performed, the prescaler and R64CNT are also reset. The ADJ30 bit is set to 0 by an RTC software reset.

RTCOE bit (RTCOUT Output Enable)

The RTCOE bit enables output of a 1-Hz/64-Hz clock signal from the RTCOUT pin.

Use the START bit to stop counting before changing the value of the RTCOE bit. Do not stop counting (write 0 to the START bit) and change the value of the RTCOE bit at the same time.

When RTCOUT is to be output from an external pin, enable the RTCOE bit and set up the port control for the pin.

AADJE bit (Automatic Adjustment Enable)

The AADJE bit controls (enables or disables) automatic adjustment.

Set the plus-minus bits (RADJ.PMADJ[1:0]) to 00b (adjustment is not performed) before changing the value of the AADJE bit.

The AADJE bit is set to 0 by an RTC software reset.

AADJP bit (Automatic Adjustment Period Select)

The AADJP bit selects the automatic-adjustment period.

Set the plus-minus bits (RADJ.PMADJ[1:0]) to 00b (adjustment is not performed) before changing the value of the AADJP bit.

The AADJP bit is set to 0 by an RTC software reset.

HR24 bit (Hours Mode)

The HR24 bit specifies whether the RTC operates in 12- or 24-hour mode.

Use the START bit to stop counting before changing the value of the HR24 bit. Do not stop counting (write 0 to the START bit) and change the value of the HR24 bit at the same time.

CNTMD bit (Count Mode Select)

The CNTMD bit specifies whether the RTC count mode operates in calendar count mode or in binary count mode in the two operation modes.

When setting the count mode, execute an RTC software reset and start again from the initial settings. This bit is updated in synchronization with the count source. However, the count mode switches only after the RTC software reset. (Bit switches before RTC reset, mode switches after RTC reset.)

For details on initial settings, see section 22.3.1. Outline of Initial Settings of Registers after Power On.

22.2.24 RCR2 : RTC Control Register 2 (in Binary Count Mode)

Base address: RTC = 0x4008_3000

Offset address: 0x24

Bit position:	7	6	5	4	3	2	1	0
Bit field:	CNTMD	—	AADJP	AADJE	RTCOE	—	RESET	START
Value after reset:	x	x	x	x	0	0	0	x

Bit	Symbol	Function	R/W
0	START*2	Start 0: Stop the 32-bit binary counter, 64-Hz counter, and prescaler 1: Operate the 32-bit binary counter, 64-Hz counter, and prescaler normally	R/W

Bit	Symbol	Function	R/W
1	RESET	RTC Software Reset 0: In writing: Invalid (writing 0 has no effect). In reading: Normal time operation in progress, or an RTC software reset has completed. 1: In writing: Initialize the prescaler and target registers for RTC software reset*1. In reading: RTC software reset in progress.	R/W
2	—	This bit is read as 0. The write value should be 0.	R/W
3	RTCOE	RTCOUT Output Enable 0: Disable RTCOUT output 1: Enable RTCOUT output	R/W
4	AADJE	Automatic Adjustment Enable*3 0: Disable automatic adjustment 1: Enable automatic adjustment	R/W
5	AADJP	Automatic Adjustment Period Select*3 0: In NOR mode, add or subtract the RADJ.ADJ[6:0] bits from the prescaler count value every 32 seconds. In LPC mode, add or subtract the RADJ.ADJ[6:0] bits from the 64-Hz counter count value every 8192 seconds. 1: In NOR mode, add or subtract the RADJ.ADJ[6:0] bits from the prescaler count value every 8 seconds. In LPC mode, add or subtract the RADJ.ADJ[6:0] bits from the 64-Hz counter count value every 2048 seconds.	R/W
6	—	The read value is undefined. The write value should be 0.	R/W
7	CNTMD	Count Mode Select*4 0: Calendar count mode 1: Binary count mode	R/W

Note 1. R64CNT, BCNTnAR, BCNTnAER, RADJ, RADJ2, RTCCR0, BCNTnCP0, RCR2.ADJ30, RCR2.AADJE, RCR2.AADJP.
Note 2. The prescaler operates only in NOR mode, and no prescaler operates in LPC mode.
Note 3. When rewriting this bit, confirm that the value has been rewritten before performing the following processing. See section 22.6.5. Notes on Writing to and Reading from Registers for notes on register writing/reading.
Note 4. When rewriting this bit, confirm that the value has been rewritten before performing the following processing.

RCR2 in the binary count mode is a register related to the automatic correction function, RTCOUT output enable, RTC software reset, and count mode control.

START bit (Start)

The START bit stops or restarts the prescaler or counter (clock) operation. This bit is updated in synchronization with the count source. When the START bit is modified, check that the bit is updated before proceeding.

RESET bit (RTC Software Reset)

The RESET bit initializes the prescaler and registers to be reset by RTC software. When 1 is written to this bit, initialization starts in synchronization with the count source. When the initialization is complete, the RESET bit is automatically set to 0. When 1 is written to the RESET bit, check that the bit is 0 before proceeding.

RTCOE bit (RTCOUT Output Enable)

The RTCOE bit enables output of a 1-Hz/64-Hz clock signal from the RTCOUT pin.

Use the START bit to stop counting before changing the value of the RTCOE bit. Do not stop counting (write 0 to the START bit) and change the value of the RTCOE bit at the same time. When an RTCOUT signal is to be output from an external pin, enable the port control in addition to setting this bit.

AADJE bit (Automatic Adjustment Enable)

The AADJE bit controls (enables or disables) automatic adjustment.

Set the plus-minus bits (RADJ.PMADJ[1:0]) to 00b (adjustment is not performed) before changing the value of the AADJE bit. The AADJE bit is set to 0 by an RTC software reset.

AADJP bit (Automatic Adjustment Period Select)

The AADJP bit selects the automatic-adjustment period.

Set the plus-minus bits (RADJ.PMADJ[1:0]) to 00b (adjustment is not performed) before changing the value of the AADJP bit. The AADJP bit is set to 0 by an RTC software reset.

CNTMD bit (Count Mode Select)

The CNTMD bit specifies whether the RTC count mode operates in calendar count mode or in binary count mode in the two operation modes.

When setting the count mode, execute an RTC software reset and start again from the initial settings. This bit is updated in synchronization with the count source. However, the count mode switches only after the RTC software reset. (Bit switches before RTC reset, mode switches after RTC reset.)

For details on initial settings, see section 22.3.1. Outline of Initial Settings of Registers after Power On .

22.2.25 RCR4 : RTC Control Register 4

Base address: RTC = 0x4008_3000

Offset address: 0x28

Bit position:	7	6	5	4	3	2	1	0
Bit field:	ROPSEL[1:0]		RTCOHP	—	—	—	—	RCKSEL
Value after reset:	x	0	0	0	0	0	0	x

Bit	Symbol	Function	R/W
0	RCKSEL	Count Source Select in NOR mode 0: Sub-clock oscillator is selected 1: Setting prohibited	R/W
4:1	—	These bits are read as 0. The write value should be 0.	R/W
5	RTCOHP	RTCOUT high precision 0: No output RTCOUT with high precision 1: Output RTCOUT with high precision	R/W
7:6	ROPSEL[1:0]	RTC Operation Mode Select 0 0: NOR mode is selected 0 1: HP mode is selected 1 0: LPC mode is selected 1 1: Setting prohibited	R/W

The RCR4 is used for selecting the RTC operation mode and the count source. The RCR4 register is used in both calendar count mode and binary count mode.

For details on count source setting, see section 22.3.1. Outline of Initial Settings of Registers after Power On and section 22.3.2. Operation Mode, Clock and Count Mode Setting Procedure. The count source must be selected only once before specifying the initial settings of the RTC registers at power on.

RCKSEL bit (Count Source Select in NOR mode)

The RCKSEL bit selects the count source from the sub-clock oscillator.

The RCKSEL bit is only used in NOR mode. When the RCKSEL bit is set to 0, the time is counted with the sub-clock oscillator. Since the initial value is undefined, set this bit before starting operation.

RTCOHP bit (RTCOUT high precision)

The RTCOHP bit configures RTCOUT output for high precision. It is possible to use only with the automatic adjustment function in HP mode.

When this bit is set to 1, RTCOUT is adjusted per 1 second using multiplied 32.768 kHz clock input.

Note: Set RCR2.START bit to stop counting before changing the value of this bit.

ROPSEL[1:0] bits (RTC Operation Mode Select)

In LPC mode, the 128 Hz clock from the sub-clock oscillator becomes the count source clock.

In HP mode, the automatic adjust period is configured to 1 second and it is possible to configure RADJ2.FADJ. The configuration of RCR2.AADJP bit is ignored.

Select the operation mode only once after turning on the power and during initialization of the RTCA registers.

22.2.26 RADJ : Time Error Adjustment Register

Base address: RTC = 0x4008_3000

Offset address: 0x2E

Bit position:	15	14	13	12	11	10	9	8	7	6	5	4	3	2	1	0
Bit field:	—	—	—	—	—	—	—	ADJ6	PMADJ[1:0]		ADJ[5:0]					
Value after reset:	x	x	x	x	x	x	x	x	x	x	x	x	x	x	x	x

Bit	Symbol	Function	R/W
5:0	ADJ[5:0]	Adjustment Value These bits specify the adjustment value from the prescaler or 64-Hz counter. The adjustment value is configured as 7-bit width including bit 8. The value 0x00 to 0x7E is configurable.	R/W
7:6	PMADJ[1:0]	Plus-Minus 0 0: Do not perform adjustment 0 1: Adjustment is performed by the addition to the prescaler or 64-Hz counter 1 0: Adjustment is performed by the subtraction from the prescaler or 64-Hz counter 1 1: Setting prohibited	R/W
8	ADJ6	This bit is appended to the upper part of ADJ[5:0] as ADJ[6].	R/W
15:9	—	These bits are read as 0. The write value should be 0.	R/W

The RADJ register is used in both calendar count mode and binary count mode. Adjustment is performed by the addition to or subtraction from the prescaler or 64-Hz counter. If the Automatic Adjustment Enable (RCR2.AADJE) bit is 0, adjustment is performed when writing to the RADJ. If the RCR2.AADJE bit is 1, adjustment is performed in the interval specified in the Automatic Adjustment Period Select (RCR2.AADJP) bit.

The current adjustment by software (disabling automatic adjustment) may be invalid if the following adjustment value is specified within 320 cycles of the count source after the register setting. To perform adjustment consecutively, wait for 320 cycles or more of the count source after the register setting, then specify the next adjustment value.

RADJ is updated in synchronization with the count source. When RADJ is modified, check that all the bits are updated before continuing with more processing. This register is set to 0x00 by an RTC software reset.

ADJ6, ADJ[5:0] bits (Adjustment Value)

ADJ6 is treated as ADJ[6]. The ADJ[6:0] bits specify the adjustment value (number of sub-clock cycles) from the prescaler.

PMADJ[1:0] bits (Plus-Minus)

The PMADJ[1:0] bits select whether the clock is set ahead or back depending on the error-adjustment value set in the ADJ6 and ADJ[5:0] bits.

22.2.27 RADJ2 : Time Error Adjustment Register 2

Base address: RTC = 0x4008_3000

Offset address: 0x30

Bit position:	15	14	13	12	11	10	9	8	7	6	5	4	3	2	1	0
Bit field:	FADJ[10:0]											—	—	—	—	—
Value after reset:	x	x	x	x	x	x	x	x	x	x	x	0	0	0	0	0

Bit	Symbol	Function	R/W
4:0	—	These bits are read as 0. The write value should be 0.	R/W
15:5	FADJ[10:0]	Fractional Adjust Value 0x000: 0 0x001: 0.000488 (= 1/2048) 0x002: 0.000976 (= 2/2048) ⋮ 0x7FF: 0.999511 (= 2047/2048)	R/W

FADJ[10:0] bits (Fractional Adjust Value)

The FADJ[10:0] bits configure fractional value for automatic/software adjust function. It is used only for HP mode. RADJ.ADJ bit configures integer value.

Note: After changing these bits, the RADJ.ADJ bit should always be set because RADJ2 register is updated when RADJ register is set.

22.2.28 RTCCR0 : Time Capture Control Register 0

Base address: RTC = 0x4008_3000

Offset address: 0x40 + 0x02

Bit position:	7	6	5	4	3	2	1	0
Bit field:	TCEN	—	TCNF[1:0]		—	TCST	TCCT[1:0]	
Value after reset:	x	0	x	x	0	x	x	x

Bit	Symbol	Function	R/W
1:0	TCCT[1:0]	Time Capture Control 0 0: Do not detect events 0 1: Detect rising edge 1 0: Detect falling edge 1 1: Detect both edges	R/W
2	TCST	Time Capture Status 0: No event detected 1: Event detected*1	R/W
3	—	This bit is read as 0. The write value should be 0.	R/W
5:4	TCNF[1:0]	Time Capture Noise Filter Control 0 0: Turn noise filter off 0 1: Setting prohibited 1 0: Turn noise filter on (count source) 1 1: Turn noise filter on (count source by divided by 32)	R/W
6	—	These bits are read as 0. The write value should be 0.	R/W
7	TCEN	Time Capture Event Input Pin Enable 0: Disable the RTCIC0 pin as the time capture event input pin 1: Enable the RTCIC0 pin as the time capture event input pin	R/W

Note 1. Indicates that an event is detected. Writing 1 to this bit has no effect. Writing 0 sets this bit to 0.

The RTCCR0 register is used both in calendar count mode and in binary count mode. RTCCR0 controls the RTCIC0 pin. RTCCR0 is updated in synchronization with the count source. When RTCCR0 is modified, check that all the bits except the TCST bit are updated before continuing with additional processing. This register is cleared to 0x00 by an RTC software reset.

TCCT[1:0] bits (Time Capture Control)

The TCCT[1:0] bits control the edge detection of the time capture event input pin RTCIC0. The detection edge is selectable. The TCCT[1:0] bits must be set while the TCEN bit is 1.

TCST bit (Time Capture Status)

The TCST bit indicates that an event on the time capture event input pin, RTCIC0, was detected. When the TCST bit is 0, no event is detected. When the TCST bit is 1, this bit indicates that an event was detected on the associated pin and the capture register is valid. When multiple events are detected, the capture time for the first event is retained.

The event is detected only during count operation (RCR2.START bit = 1). Before reading the capture register, make sure that this bit is set to 1.

Set the TCST bit while the TCCT[1:0] bits are 00b (no event is detected). The TCST bit is set to 0 in synchronization with the count source. When the TCST bit is set to 0, check that the bit is updated before continuing with additional processing.

TCNF[1:0] bits (Time Capture Noise Filter Control)

The TCNF[1:0] bits control the noise filter of the time capture event input pin RTCIC0.

When the noise filter is on, the count source divided by 1 or divided by 32 is selectable. In this case, when the input level on the time capture event input pin matches three consecutive times at the set sampling period, the input level is determined.

Set the TCNF[1:0] bits while the TCCT[1:0] bits are 00b (no event is detected). When the noise filter is used, set the TCNF[1:0] bits, wait for 3 cycles of the specified sampling period, then set the TCCT[1:0] bits.

TCEN bit (Time Capture Event Input Pin Enable)

The TCEN bit enables or disables the time capture event input pin RTCIC0. When the 32 kHz clock is selected (RCR4.RCKSEL bit = 0) and the 32 kHz clock oscillator is stopped, the time capture event input pin RTCTC0 is invalid. If the TCEN bit is set to 0, also set the TCCT[1:0] bits to 00b.

Before setting this bit to 1, be sure to set the count source setting bit (RCR4.RCKSEL) and port control setting bits (PmnPFS.PDR, and PmnPFS.PMR). For details on the port control setting bits (PmnPFS.PDR and PmnPFS.PMR), see section 18, I/O Ports.

22.2.29 RSECCP0 : Second Capture Register 0 (in Calendar Count Mode)

Base address: RTC = 0x4008_3000

Offset address: 0x52 + 0x10

Bit position:	7	6	5	4	3	2	1	0
Bit field:	—	SEC10[2:0]			SEC1[3:0]			
Value after reset:	x	x	x	x	x	x	x	x

Bit	Symbol	Function	R/W
3:0	SEC1[3:0]	1-Second Capture Capture value for the ones place of seconds.	R
6:4	SEC10[2:0]	10-Second Capture Capture value for the tens place of seconds.	R
7	—	The read value is undefined.	R

RSECCP0 is a read-only register that captures the RSECCNT value when a time capture event is detected.

The event detection times detected by the RTCIC0 pin are stored in the RSECCP0 register. This register is cleared to 0x00 by an RTC software reset. Before reading from this register, the time capture event detection should be stopped using the RTCCR0.TCCT[1:0] bits.

22.2.30 RMINCP0 : Minute Capture Register 0 (in Calendar Count Mode)

Base address: RTC = 0x4008_3000

Offset address: 0x54 + 0x10

Bit position:	7	6	5	4	3	2	1	0
Bit field:	—	MIN10[2:0]			MIN1[3:0]			
Value after reset:	x	x	x	x	x	x	x	x

Bit	Symbol	Function	R/W
3:0	MIN1[3:0]	1-Minute Capture Capture value for the ones place of minutes.	R
6:4	MIN10[2:0]	10-Minute Capture Capture value for the tens place of minutes.	R
7	—	The read value is undefined.	R

RMINCP0 is a read-only register that captures the RMINCNT value when a time capture event is detected.

The event detection times detected by the RTCIC0 pin are stored in the RMINCP0 register.

This register is cleared to 0x00 by an RTC software reset. Before reading from this register, the time capture event detection should be stopped using the RTCCR0.TCCT[1:0] bits.

22.2.31 RHRCP0 : Hour Capture Register 0 (in Calendar Count Mode)

Base address: RTC = 0x4008_3000

Offset address: 0x56 + 0x10

Bit position:	7	6	5	4	3	2	1	0
Bit field:	—	PM	HR10[1:0]		HR1[3:0]			
Value after reset:	x	x	x	x	x	x	x	x

Bit	Symbol	Function	R/W
3:0	HR1[3:0]	1-Hour Capture Capture value for the ones place of hours	R
5:4	HR10[1:0]	10-Hour Capture Capture value for the tens place of hours	R
6	PM	PM 0: AM 1: PM	R
7	—	The read value is undefined.	R

RHRCP0 is a read-only register that captures the RHRCNT value when a time capture event is detected.

The event detection times detected by the RTCIC0 pin are stored in the RHRCP0 register.

The PM bit is only enabled when the RCR2.HR24 bit is 0 (in 12-hour mode).

This register is cleared to 0x00 by an RTC software reset. Before reading from this register, you must stop the time capture event detection using the RTCCR0.TCCT[1:0] bits.

22.2.32 RDAYCP0 : Date Capture Register 0 (in Calendar Count Mode)

Base address: RTC = 0x4008_3000

Offset address: 0x5A + 0x10

Bit position:	7	6	5	4	3	2	1	0
Bit field:	—	—	DATE10[1:0]		DATE1[3:0]			
Value after reset:	x	x	x	x	x	x	x	x

Bit	Symbol	Function	R/W
3:0	DATE1[3:0]	1-Day Capture Capture value for the ones place of days.	R
5:4	DATE10[1:0]	10-Day Capture Capture value for the tens place of days.	R
7:6	—	The read value is undefined.	R

RDAYCP0 is a read-only register that captures the RDAYCNT value when a time capture event is detected.

The event detection times detected by the RTCIC0 pin are stored in the RDAYCP0 register.

This register is cleared to 0x00 by an RTC software reset. Before reading from this register, the time capture event detection should be stopped using the RTCCR0.TCCT[1:0] bits.

22.2.33 RMONCP0 : Month Capture Register 0 (in Calendar Count Mode)

Base address: RTC = 0x4008_3000

Offset address: 0x5C + 0x10

Bit position:	7	6	5	4	3	2	1	0
Bit field:	—	—	—	MON10	MON1[3:0]			
Value after reset:	0	0	0	x	x	x	x	x

Bit	Symbol	Function	R/W
3:0	MON1[3:0]	1-Month Capture Capture value for the ones place of months.	R
4	MON10	10-Month Capture Capture value for the tens place of months.	R
7:5	—	These bits are read as 0.	R

RMONCP0 is a read-only register that captures the RMONCNT value when a time capture event is detected.

The event detection times detected by the RTCIC0 pin are stored in the RMONCP0 register.

This register is cleared to 0x00 by an RTC software reset. Before reading from this register, the time capture event detection should be stopped using the RTCCR0.TCCT[1:0] bits.

22.2.34 BCNTnCP0 : BCNTn Capture Register 0 (n= 0 to 3) (in Binary Count Mode)

Base address: RTC = 0x4008_3000

Offset address: 0x52 (BCNT0CP0)
0x54 (BCNT1CP0)
0x56 (BCNT2CP0)
0x5A (BCNT3CP0)

Bit position:	7	6	5	4	3	2	1	0
Bit field:								
Value after reset:	x	x	x	x	x	x	x	x

BCNTnCP0 is a read-only register that captures the BCNTn value when a time capture event is detected. BCNT3CP0 is assigned to the BCNTCP0[31:24] bits, BCNT2CP0 is assigned to the BCNTCP0[23:16] bits, BCNT1CP0 is assigned to the BCNTCP0[15:8] bits and BCNT0CP0 is assigned to the BCNTCP0[7:0] bits. The event detection times detected by the RTCIC0 pin are stored in the BCNTnCP0 register.

This register is cleared to 0x00 by an RTC software reset. Before reading from this register, you must stop the time capture event detection using the RTCCR0.TCCT[1:0] bits.

22.3 Operation

22.3.1 Outline of Initial Settings of Registers after Power On

After the power is turned on, perform the initial settings for the operation mode, clock, count mode, time error adjustment, time, alarm, and interrupts.

Table 22.4 Initial settings after a power on

No.	Step Name	Description
1	Clock supply, operation mode and count mode settings	Initial setting for clock supply, operation mode and count mode
2	Set the time	Time setting in the clock counter and initial setting of the time error adjustment register
3	Set the alarm	Initial setting of the alarm registers
4	Set the interrupt	Initial setting of the interrupt control register
5	Set the time capture control register n	Initial setting of the time capture control register n

22.3.2 Operation Mode, Clock and Count Mode Setting Procedure

Figure 22.2 and Figure 22.3 show how to set the operation mode, clock and the count mode.

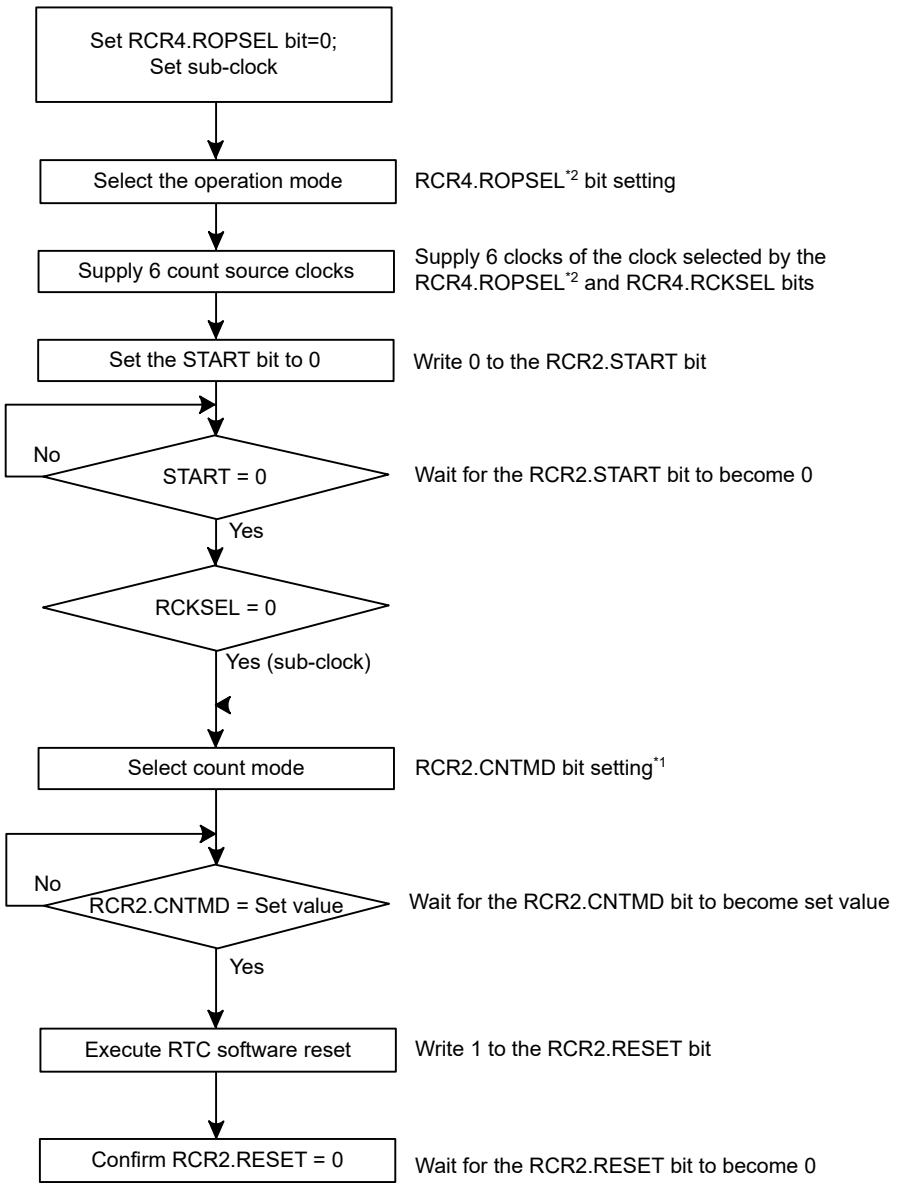

Note 1. This step is not required if the count mode is concurrently set by setting the START bit to 0. A value associated with the count mode setting must be written to the RCR2.CNTMD bit.
Note 2. RCR4.RCKSEL bit setting is not required if the LPC mode is set.

Figure 22.2 Clock and count mode setting procedure (NOR mode and LPC mode)

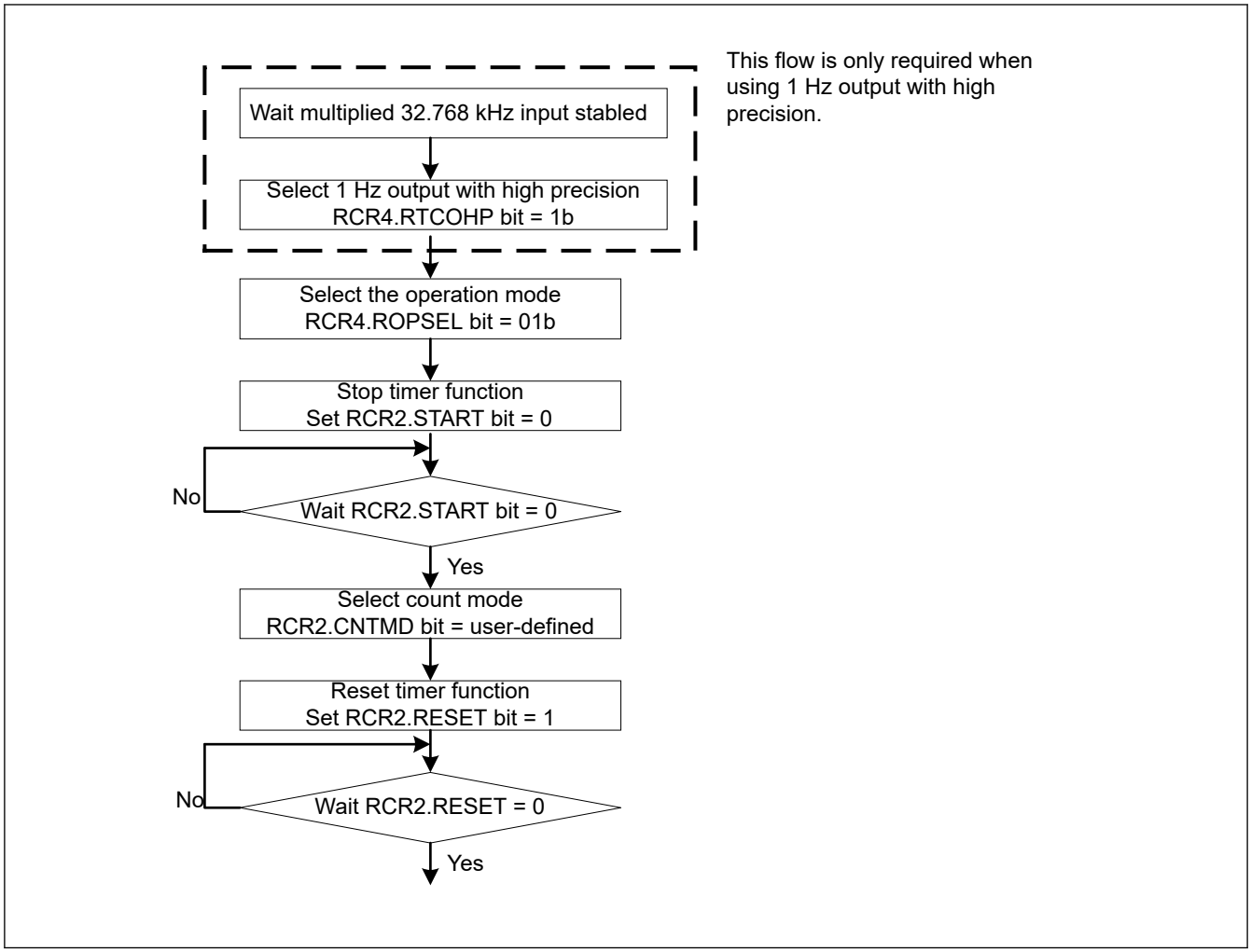

Figure 22.3 Clock and count mode setting procedure (HP mode)

22.3.3 Setting the Time

Figure 22.4 shows how to set the time.

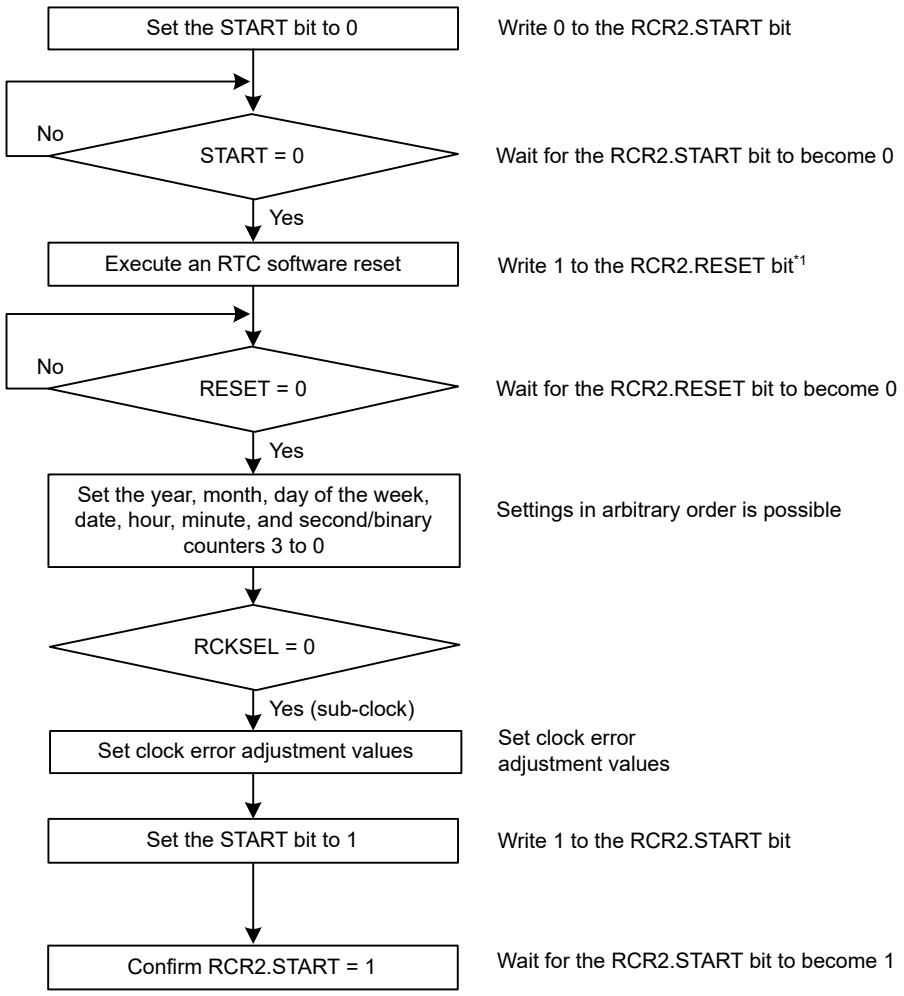

Note 1. This step can be omitted in initial settings after power-on because an RTC software reset is executed in the clock setting procedure that is performed during initial settings at power-on.
Note 2. Set in any order.

Figure 22.4 Setting the time

22.3.4 30-Second Adjustment

Figure 22.5 shows how to execute a 30-second adjustment.

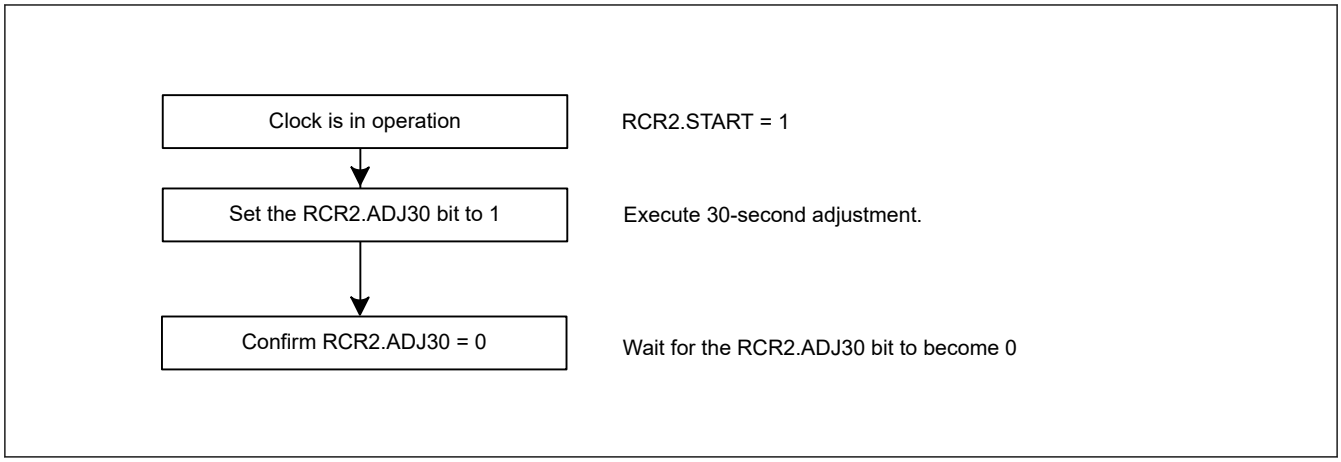

Figure 22.5 30-second adjustment

22.3.5 Reading 64-Hz Counter and Time

Figure 22.6 shows how to read a 64-Hz counter and time.

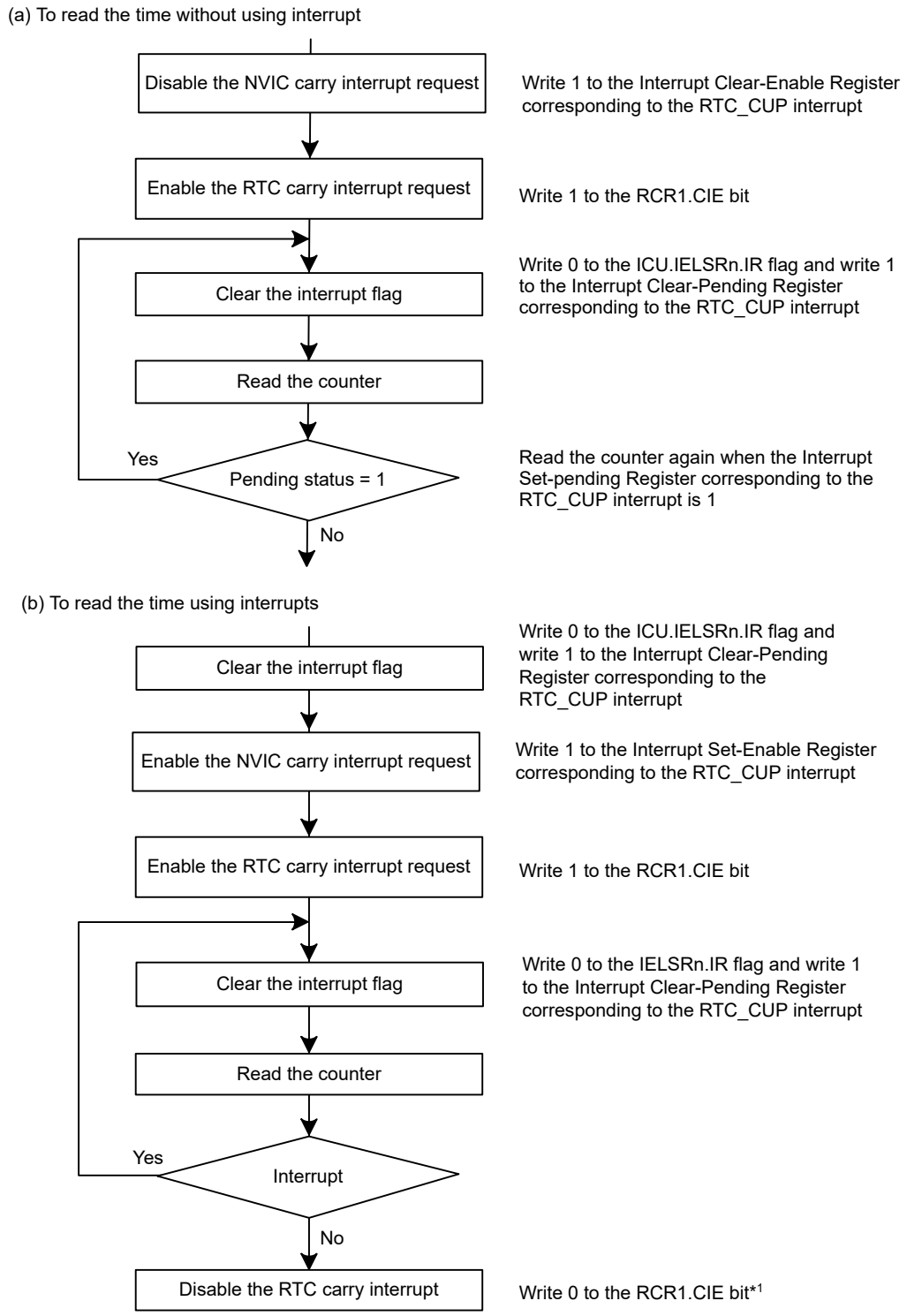

Note 1. Disable interrupts if required.

Figure 22.6 Reading time

If a carry occurs while the 64-Hz counter and time are read, the correct time is not obtained, therefore they must be read again. The procedure for reading the time without using interrupts is shown in (a) in Figure 22.6, and the procedure using carry interrupts is shown in (b). To keep the program simple, method (a) should be used in most cases.

Only method (a) could be used in LPC mode.

22.3.6 Alarm Function

Figure 22.7 shows how to use the alarm function.

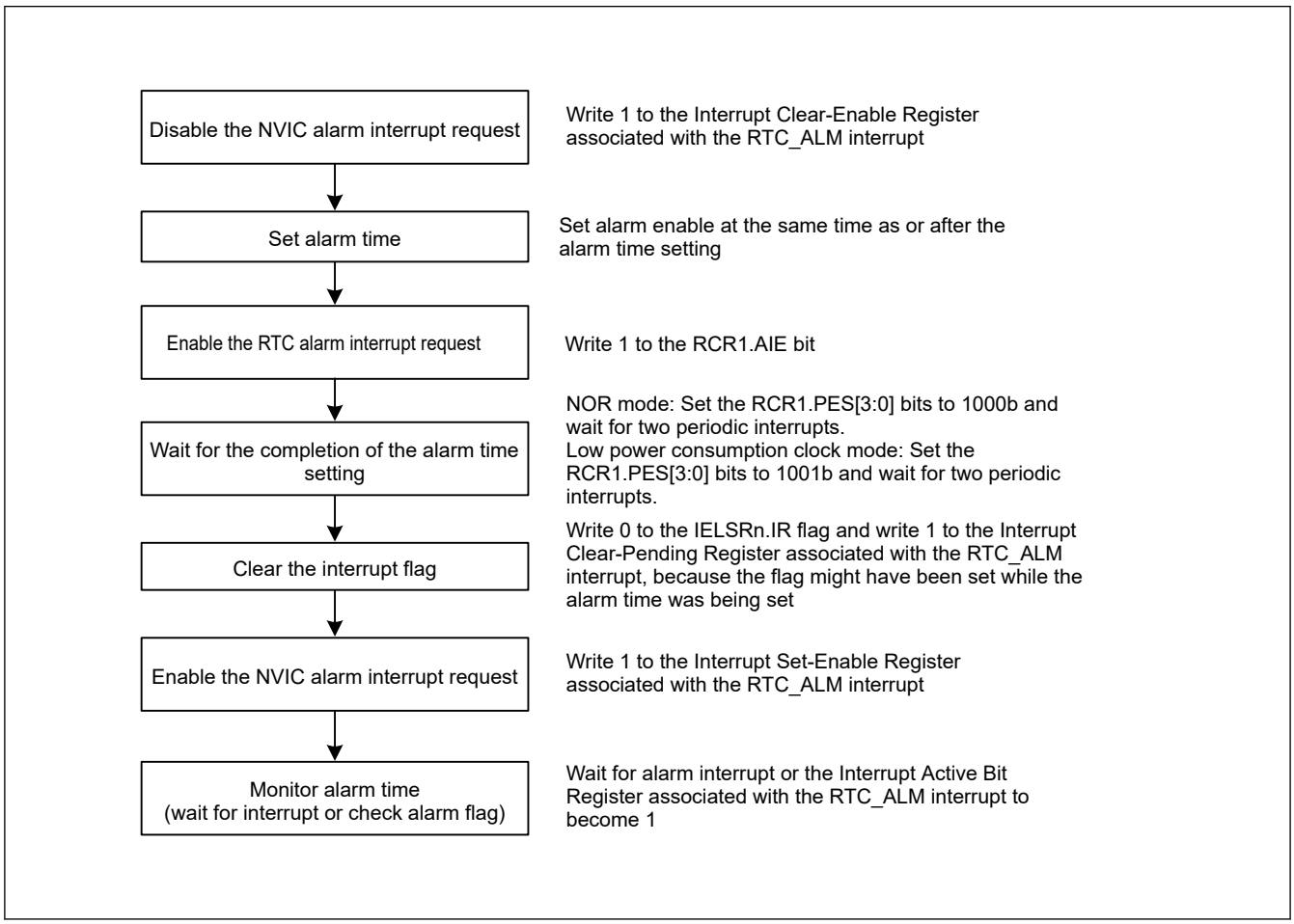

Figure 22.7 Using the alarm function

In calendar count mode, an alarm can be generated by any one of year, month, date, day-of-week, hour, minute or second, or any combination of those. Write 1 to the ENB bit in the alarm registers involved in the alarm setting, and set the alarm time in the lower bits. Write 0 to the ENB bit in registers not involved in the alarm setting.

In binary count mode, an alarm can be generated in any bit combination of 32 bits. Write 1 to the ENB bit of the Alarm Enable register associated with the target bit of the alarm, and set the alarm time in the alarm register. For bits that are not the target of the alarm, write 0 to the ENB bit of the Alarm Enable register.[*1]

For any of the ENB[31:0] bits that are set to 1, the bits in the corresponding positions in the binary counter (BCNT[31:0]) are compared with the values of the corresponding bits in the binary alarm registers[*1]. When all such bits match, the IR flag associated with the RTC_ALM interrupt is set to 1 and the corresponding bits in the Interrupt Set-Pending/Clear-Pending Registers are set to 1. Alarm detection can be confirmed by reading the Interrupt Set-Pending Register associated with the RTC_ALM interrupt, but an interrupt should be used in most cases. If 1 is set in the Interrupt Set-Enable Register associated with the RTC_ALM interrupt, an alarm interrupt is generated in the event of the alarm, enabling the alarm to be detected.

Writing 0 sets the IELSRn.IR flag associated with the RTC_ALM interrupt to 0. If interrupt is enabled, the Interrupt Set-Pending/Clear-Pending Register associated with the RTC_ALM interrupt is cleared automatically after exiting the interrupt handler. Otherwise, write 1 to the Interrupt Clear-Pending Register associated with the RTC_ALM interrupt to clear it.

When the counter and the alarm time match in a low power state, the MCU returns from the low power state.

Note 1. For any bits in the ENB bits that are set to 1, the values in the corresponding positions in the alarm registers from the following registers are compared with the corresponding bits of the counted values.

Counter registers: RSECCNT, RMINCNT, RHRCNT, RWKCNT, RDAYCNT, RMONCNT, RYRCNT

Alarm registers: RSECAR, RMINAR, RHRAR, RWKAR, RDAYAR, RMONAR, RYRAREN

22.3.7 Procedure for Disabling Alarm Interrupt

Figure 22.8 shows the procedure for disabling the enabled alarm interrupt request.

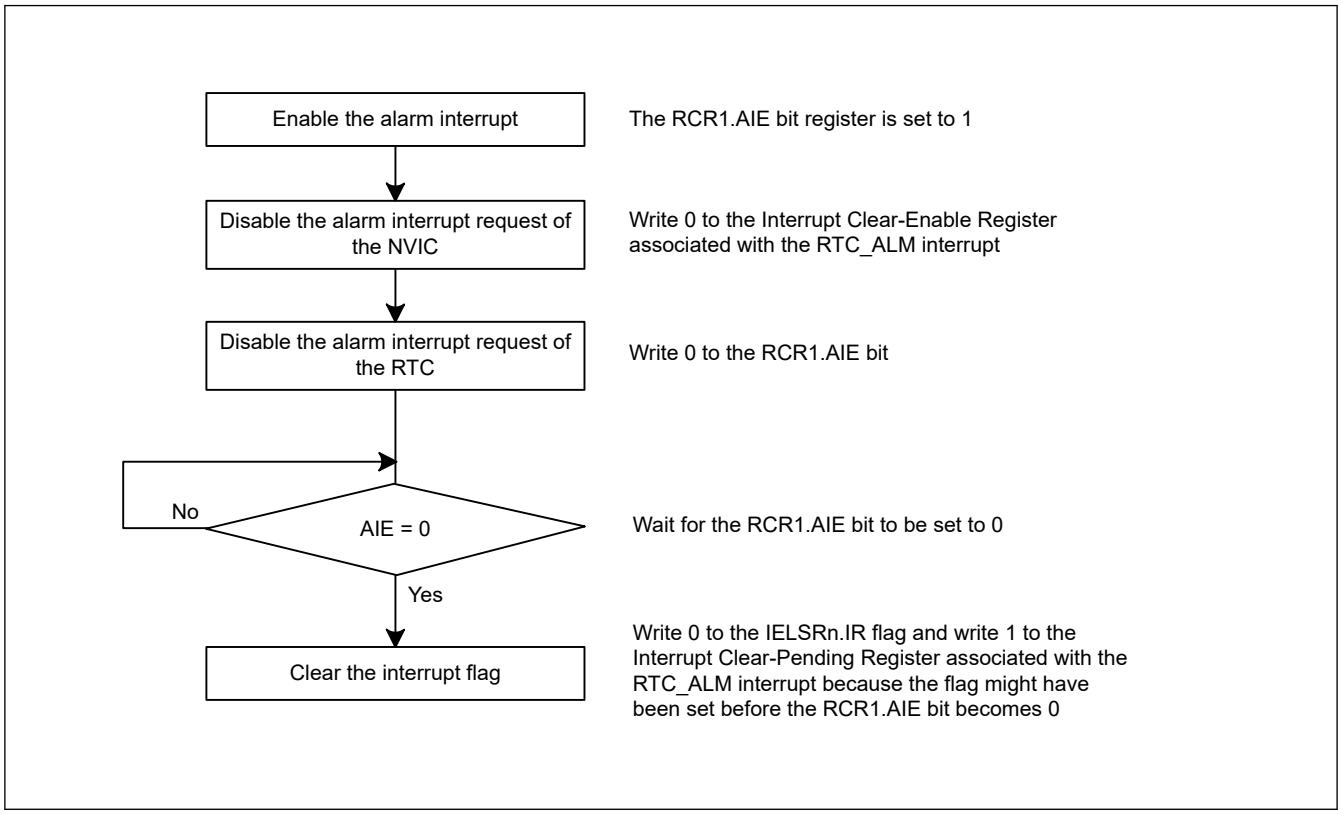

Figure 22.8 Procedure for disabling alarm interrupt request

22.3.8 Time Error Adjustment Function

The time error adjustment function is used to correct errors, running fast or slow, in the time caused by variation in the precision of oscillation by the sub-clock oscillator. In NOR mode, because 32768 cycles of the sub-clock oscillator constitute 1 second of operation when the sub-clock oscillator is selected, the clock runs fast if the sub-clock frequency is high and slow if the sub-clock frequency is low. In LPC mode, because 128 cycles of the 128-Hz clock constitute 1 second of operation, the clock runs fast if the 128-Hz clock frequency is high and slow if the 128-Hz clock frequency is low.

The time error adjustment functions include:

- Automatic adjustment
- Adjustment by software

Use the RCR2.AADJE bit to select automatic adjustment or adjustment by software.

Adjustment by software is not supported in LPC mode.

22.3.8.1 Automatic adjustment

Enable automatic adjustment by setting the RCR2.AADJE bit to 1.

In NOR mode, automatic adjustment is the addition or subtraction of the value counted by the prescaler to or from the value in the RADJ and RADJ2 registers every time the adjustment period selected by the RCR2.AADJP bit elapses. Table 22.5 shows the summary of automatic adjustment function.

Table 22.5 Automatic adjustment function

Function		NOR mode (RCR4.ROPSEL = 00b)	LPC mode (RCR4.ROPSEL = 10b)	HP mode (RCR4.ROPSEL = 01b)	Configuration register
Clock source	—	32.768 kHz	32.768 kHz, 128 Hz	32.768 kHz, multiplied 32.768 kHz clock	—
Calendar count mode	Interval	a) 10 seconds	a) 1 hour	1 second	RCR2.AADJP
		b) 60 seconds	b) 1 day		
	Range [ppm]	a) ±384	a) ±275	±3875	RADJ.ADJ
		b) ±64	b) ±11.4		RADJ2.FADJ
	Resolution [ppm]	a) 30.52 / 10	a) 7812.5 / 3600	0.015	RADJ.ADJ
		b) 30.52 / 60	b) 7812.5 / 3600 × 24		RADJ2.FADJ
	Jitter per 1 Hz [ppm]	a) ±30.52 × 10	a) ±7812.5 × 3600	±30.52	—
		b) ±30.52 × 60	b) ±7812.5 × 3600 × 24	±0.01925: possible for RTCOUT only when supplied the multiplied 32.768 kHz clock (RCR4.RTCOHP = 1)	
Binary count mode	Interval	a) 8 seconds	a) 2048 seconds	Same as Calendar count mode	Same as Calendar count mode
		b) 32 seconds	b) 8192 seconds		
	Range [ppm]	a) ±480	a) ±480		
		b) ±120	b) ±120		
	Resolution [ppm]	a) 30.52 / 8	a) 7812.5 / 2048		
		b) 30.52 / 32	b) 7812.5 / 8192		
	Jitter per 1 Hz [ppm]	a) ±30.52 × 8	a) ±7812.5 × 2048		
		b) ±30.52 × 32	b) ±7812.5 × 8192		

(1) Example 1: Sub-clock oscillator running at 32.769 kHz (NOR mode)

Adjustment procedure

When the sub-clock oscillator is running at 32.769 kHz, 1 second elapses every 32769 clock cycles. The RTC is meant to run at 32768 clock cycles, so the clock runs fast by 1 clock cycle every second. The time on the clock is fast by 60 clock cycles per minute, so adjustment can take the form of setting the clock back by 60 cycles every minute.

Register settings when RCR2.CNTMD = 0:

- RCR2.AADJP = 0 (adjustment every minute)
- RADJ.PMADJ[1:0] = 10b (adjustment is performed by the subtraction from the prescaler)
- RADJ.ADJ[6:0] = 60 (0x3C)

(2) Example 2: Sub-clock oscillator running at 32.766 kHz (NOR mode)

Adjustment procedure

When the sub-clock oscillator is running at 32.766 kHz, 1 second elapses every 32766 clock cycles. The RTC is meant to run at 32768 clock cycles, so the clock runs slow by 2 clock cycles every second. The time on the clock is slow by 20 clock cycles every 10 seconds, so adjustment can take the form of setting the clock forward by 20 cycles every 10 seconds.

Register settings when RCR2.CNTMD = 0:

- RCR2.AADJP = 1 (adjustment every 10 seconds)

- RADJ.PMADJ[1:0] = 01b (adjustment is performed by the addition to the prescaler)
- RADJ.ADJ[6:0] = 20 (0x14)

(3) Example 3: Sub-clock oscillator running at 32.764 kHz (NOR mode)

Adjustment procedure

When the sub-clock oscillator is running at 32.764 kHz, 1 second elapses on 32764 clock cycles. Because the RTC operates for 32768 clock cycles as 1 second, the clock is delayed for 4 clock cycles per second. In 8 seconds, the delay is 32 clock cycles, therefore correction can be made by advancing the clock 32 clock cycles every 8 seconds.

Register settings when RCR2.CNTMD = 1:

- RCR2.AADJP = 1 (adjustment every 8 seconds)
- RADJ.PMADJ[1:0] = 01b (adjustment is performed by the addition to the prescaler)
- RADJ.ADJ[6:0] = 32 (0x20)

In LPC mode, automatic adjustment is the addition or subtraction of the value counted by the 64-Hz counter to or from the value in the RADJ register every time the adjustment period selected by the RCR2.AADJP bit elapses.

(4) Example 4 : Sub-clock oscillator running at 32.769 kHz (LPC mode)

Adjustment procedure

The 128-Hz clock is generated from the sub-clock with 256 dividing ratio. When the sub-clock oscillator is running at 32.769 kHz, 1 second elapses in every 32769 sub-clock cycles, thus 32769/256 count source cycles. The RTC is meant to run at 32768/256 clock cycles, so the clock runs fast by 1/256 clock cycle every second. The time on the clock is fast by (1/256) × 3600 clock cycles per hour, so adjustment can take the form of setting the clock back by (1/256) × 3600 = 14 cycles every hour.

Register settings when RCR2.CNTMD = 0:

- RCR2.AADJP = 1 (adjustment every hour)
- RADJ.PMADJ[1:0] = 10b (adjustment is performed by the subtraction from the 64-Hz counter)
- RADJ.ADJ[6:0] = 14 (0x0E)

(5) Example 5: Sub-clock oscillator running at 32.764 kHz (LPC mode)

Adjustment procedure

The 128-Hz clock is generated from the sub-clock with 256 dividing ratio. When the sub-clock oscillator runs at 32.764 kHz, 1 second elapses in every 32764 sub-clock cycles, thus 32764/256 count source cycles. Because the RTC operates for 32768/256 clock cycles as 1 second, the clock is delayed for 4/256 clock cycles per second. In 2048 seconds, the delay is 4/256 × 2048 = 32 clock cycles, therefore correction can be made by setting the clock for 32 clock cycles every 2048 seconds.

Register settings when RCR2.CNTMD = 1:

- RCR2.AADJP = 1 (adjustment every 2048 seconds)
- RADJ.PMADJ[1:0] = 01b (adjustment is performed by the addition to the 64-Hz counter)
- RADJ.ADJ[6:0] = 32 (0x20)

(6) Example 6: Sub-clock oscillator running at 32.7685 kHz (HP mode)

Adjustment procedure

When the sub-clock is running at 32.7685 kHz, 1 second elapses every 32,768.5 clock cycles. So, the clock runs fast by one clock cycle every 2 seconds.

Register settings when RCR2.CNTMD = 0:

- RCR2.AADJP = 0 (adjustment every minute)
- RADJ.PMADJ[1:0] = 10b (adjustment is performed by the subtraction from the prescaler)

- RADJ2.FADJ[10:0] = 0x400 (equal to 0.5 = 1024/2048)
- RADJ.ADJ[6:0] = 0 (0x00)

Note: After changing RADJ2.FADJ bit, RADJ.ADJ bit should always be set.

22.3.8.2 Adjustment by software

Enable adjustment by software by setting the RCR2.AADJE bit to 0. Adjustment by software is the addition or subtraction of the value counted by the prescaler to or from the value in the RADJ register on execution of a write instruction to the RADJ register. Adjustment by software is not supported in LPC mode.

(1) Example 1: Sub-clock oscillator running at 32.769 kHz (NOR mode)

Adjustment procedure

When the sub-clock oscillator is running at 32.769 kHz, 1 second elapses every 32769 clock cycles. The RTC is meant to run at 32768 clock cycles, so the clock runs fast by 1 clock cycle every second. The time on the clock is fast by 1 clock cycle per second, so adjustment can take the form of setting the clock back by 1 cycle every second.

Register settings

- RADJ.PMADJ[1:0] = 10b (adjustment is performed by the subtraction from the prescaler)
- RADJ.ADJ[6:0] = 1 (0x01)
  This is written to the RADJ register once per 1-second interrupt.

(2) Example 2: Sub-clock oscillator running at 32.7685 kHz (HP mode)

Adjustment procedure

When the sub-clock is running at 32.7685 kHz, 1 second elapses every 32,768.5 clock cycles. So, the clock runs fast by half clock cycle every second.

Register settings

- RADJ.PMADJ[1:0] = 10b (adjustment is performed by the subtraction from the prescaler)
- RADJ2.FADJ[11:0] = 0x400 (equal to 0.5 = 1024/2048)
- RADJ.ADJ[6:0] = 0 (0x00)

22.3.8.3 Procedure to change the mode of adjustment

When changing the mode of adjustment, change the value of the AADJE bit in RCR2 after setting the RADJ.PMADJ[1:0] bits to 00b (adjustment is not performed).

To change adjustment by software to automatic adjustment:

1. Set the RADJ.PMADJ[1:0] bits to 00b (adjustment is not performed).
2. Set the RCR2.AADJE bit to 1 (automatic adjustment is enabled).
3. Use the RCR2.AADJP bit to select the period of adjustment.
4. In RADJ, set the PMADJ[1:0] bits for addition or subtraction and the ADJ[6:0] bits to the value for use in time error adjustment.

To change automatic adjustment to adjustment by software:

1. Set the RADJ.PMADJ[1:0] bits to 00b (adjustment is not performed).
2. Set the RCR2.AADJE bit to 0 (adjustment by software is enabled).
3. Proceed with the adjustment by setting the RADJ.PMADJ[1:0] bits for addition or subtraction and the RADJ.ADJ[6:0] bits to the value for use in time error adjustment at the wanted time. After that, the time is adjusted every time a value is written to the RADJ register.

22.3.8.4 Procedure to Stop Adjustment

Stop the adjustment by setting the RADJ.PMADJ[1:0] bits to 00b (adjustment is not performed).

22.3.9 Capturing the time

The RTC is capable of storing the month, date, hour, minute and second/binary counters 3 to 0 by detecting an edge of a signal on a time capture event input pin in calendar count mode or binary count mode.

A noise filter can also be used on a time capture event input pin. If the noise filter is enabled, the RTCCR0.TCST bit is set to 1 when the input level on the pin matches three times.

The noise filter can be switched on or off for each of the time capture event input pins. Operation when the noise filter is off is shown in Figure 22.9 and operation when the noise filter is on is shown in Figure 22.10.

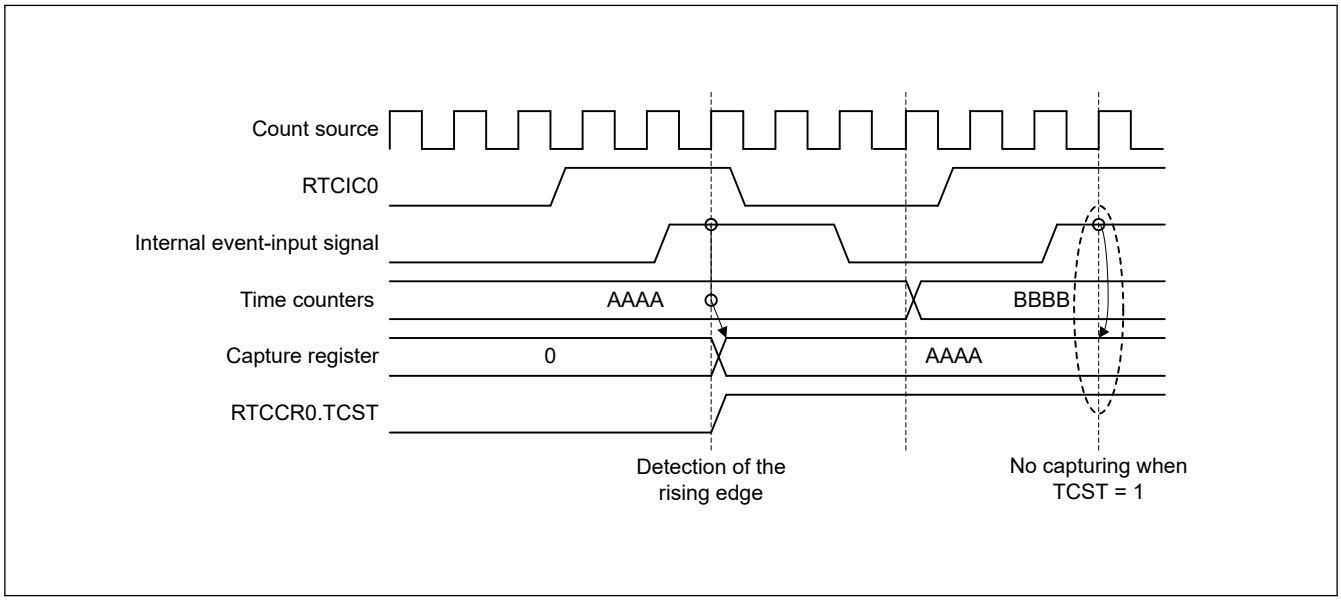

Figure 22.9 Timing of a time capture operation with the noise filter off

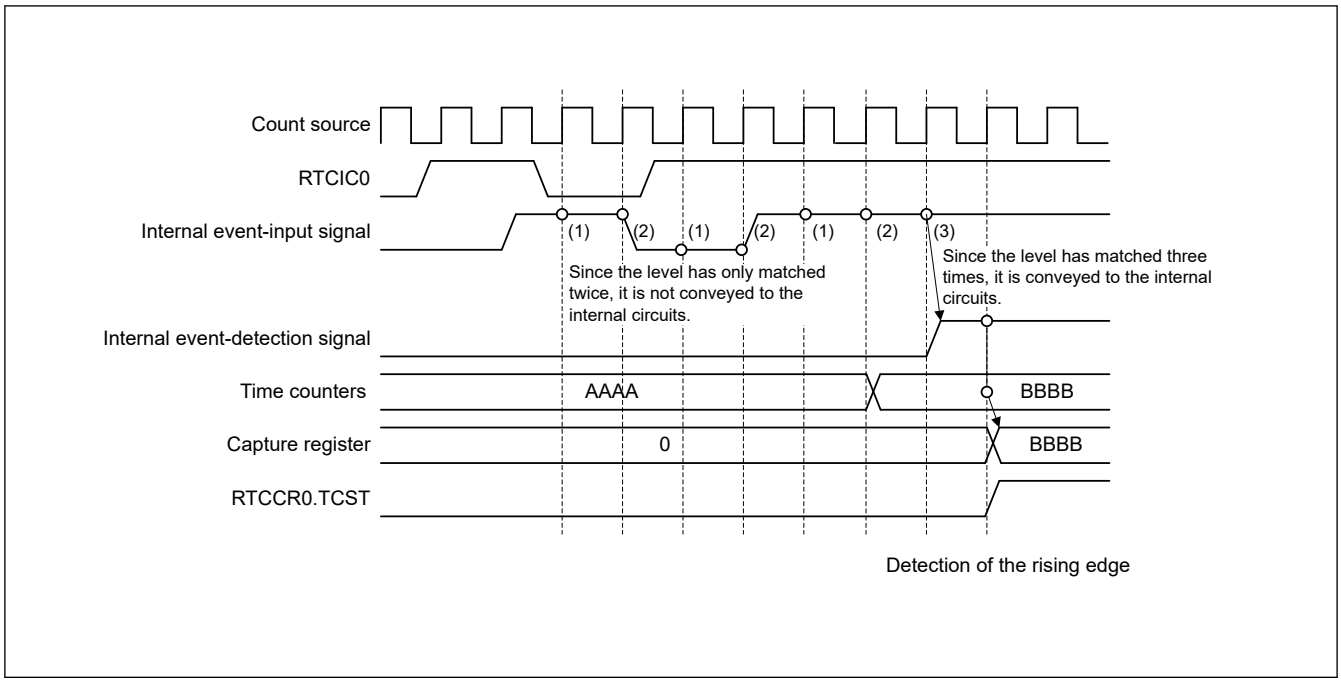

Figure 22.10 Timing of a time capture operation with the noise filter on

22.4 Interrupt Sources

The RTC has three interrupt sources, as listed in Table 22.6.

Table 22.6 RTC interrupt sources

Name	Interrupt source
RTC_ALM	Alarm interrupt
RTC_PRD	Periodic interrupt
RTC_CUP	Carry interrupt

(1) Alarm interrupt (RTC_ALM)

This interrupt is generated based on the comparison result between the alarm registers and RTC counters. For details, see section 22.3.6. Alarm Function.

Because there is a possibility that the interrupt flag might be set to 1 when the settings of the alarm registers match the clock counters, wait for the alarm time settings to be confirmed and clear the IELSRn.IR flag and the interrupt Set-Pending Register associated with the RTC_ALM interrupt to 0 again after modifying values of the alarm registers. After the interrupt flag for the alarm interrupt is set to 1 and the state is returned to mismatching of the alarm registers and clock counters, the flag is not 1 again until there is another match or the values of the alarm registers are modified again.

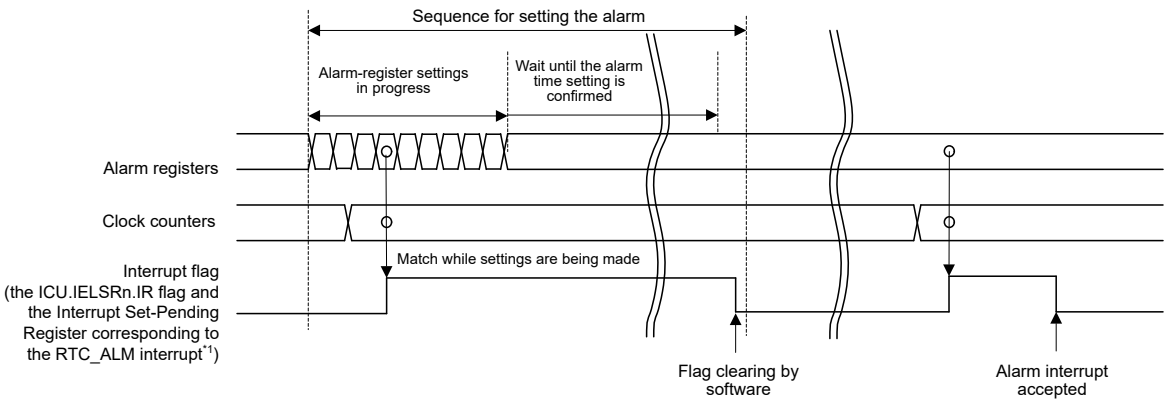

Note 1. See section 12, Interrupt Controller Unit (ICU) for details on the associated interrupt vector number.

Figure 22.11 Timing for the alarm interrupt (RTC_ALM)

(2) Periodic interrupt (RTC_PRD)

This interrupt is generated at intervals of 2 seconds, 1 second, 1/2 second, 1/4 second, 1/8 second, 1/16 second, 1/32 second, 1/64 second, 1/128 second, or 1/256 second. The interrupt interval can be selected in the RCR1.PES[3:0] bits.

Note: The interrupt generated at intervals of 1/64 second, 1/128 second, or 1/256 second is not supported in low-consumption clock mode.

(3) Carry interrupt (RTC_CUP)

This interrupt is generated when a carry to the second counter/binary counter 0 occurred or a carry to the R64CNT counter occurred during read access to the 64-Hz counter.

Note: Carry interrupt (RTC_CUP) does not support interrupts generated in software standby mode. Before entering software standby mode, be sure to set the carry interrupt enable bit (RCR1.CIE bit) to 0 before entering standby mode. After entering RUN mode, set the carry interrupt enable bit (RCR1.CIE bit) to 1 before using the carry interrupt.

Figure 22.12 shows the timing of the carry interrupt (RTC_CUP).

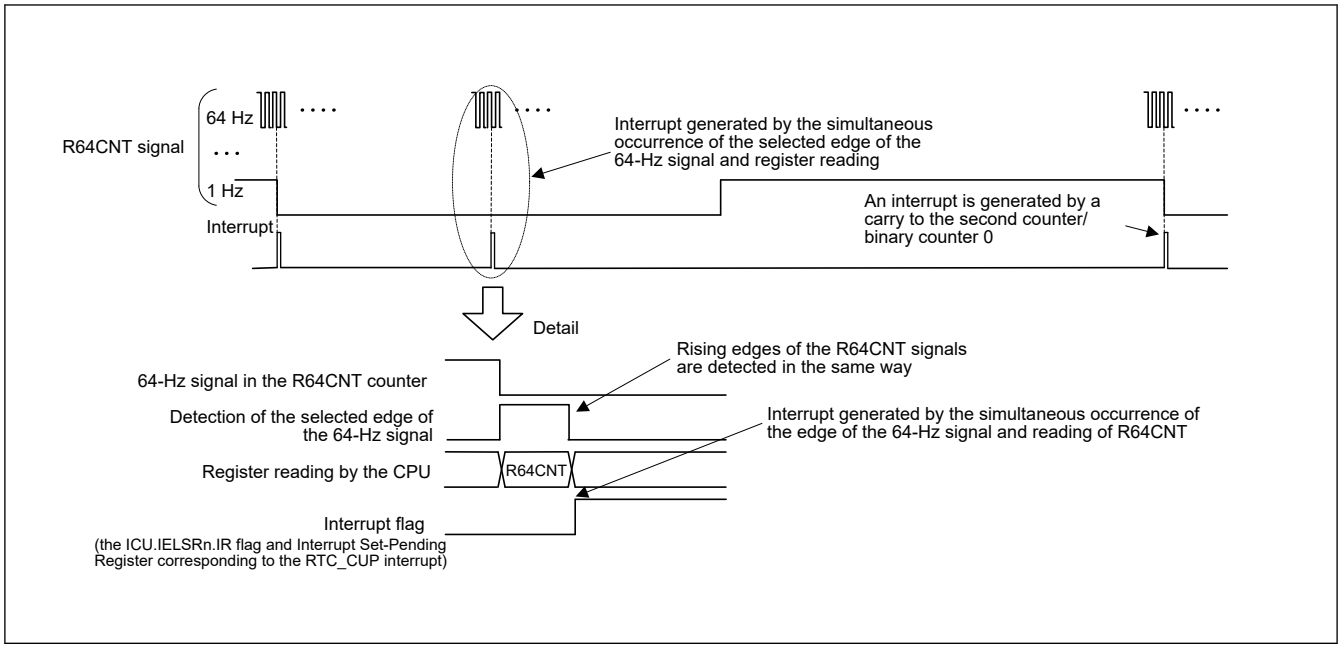

Figure 22.12 Timing for the carry interrupt (RTC_CUP)

22.5 Event Link Output

The RTC generates periodic event output (RTC_PRD) event signal for the ELC that can be used to initiate operations by other modules selected in advance.

Note: The event link output function is not supported in LPC mode. Therefore, you must disable the ELC link function of the RTC in LPC mode.

The periodic event signal is output at the interval selected from 1/256, 1/128, 1/64, 1/32, 1/16, 1/8, 1/4, 1/2, 1, and 2 seconds by setting the RCR1.PES[3:0] bits.

The event generation period immediately after the event generation is selected is not guaranteed.

Note: If event linking from the RTC is used, only set the ELC after setting the RTC, for example initialization and time settings. Setting the RTC after the ELC can lead to output of unexpected event signals.

22.5.1 Interrupt Handling and Event Linking

The RTC has a bit to enable or disable periodic interrupts. An interrupt request signal is output to the CPU when an interrupt source is generated while the associated enable bit is enabled.

In contrast, an event link output signal is sent to other modules as an event signal through the ELC when an interrupt source is generated, regardless of the setting of the associated interrupt enable bit.

Note: Although alarm and periodic interrupts can still be output during Software Standby mode, the periodic event signals for the ELC are not output.

22.6 Usage Notes

22.6.1 Register Writing during Counting

The following registers should not be written to during counting, that is, while the RCR2.START bit is 1:

- RSECCNT/BCNT0
- RMINCNT/BCNT1
- RHRCNT/BCNT2
- RDAYCNT
- RWKCNT/BCNT3

- RMONCNT
- RYRCNT
- RCR1.RTCOS
- RCR2.RTCOE
- RCR2.HR24

The counter should be stopped before writing to any of these registers.

22.6.2 Use of Periodic Interrupts

Figure 22.13 shows the procedure for using periodic interrupts.

The generation and period of the periodic interrupt can be changed by setting the RCR1.PES[3:0] bits. However, because the prescaler R64CNT and RSECCNT/BCNT0 are used to generate interrupts, the interrupt period is not guaranteed immediately after setting the RCR1.PES[3:0] bits.

In addition, any of the following operation can affect the interrupt period:

- Stopping/restarting or resetting counter operation
- Reset by RTC software
- 30-second adjustment by changing the RCR2 value

When the time error adjustment function is used, the interrupt generation period after adjustment is added or subtracted based on the adjustment value.

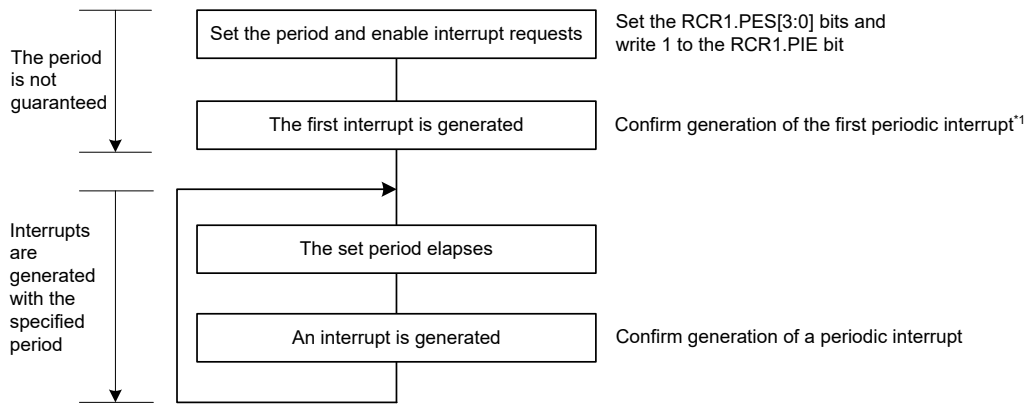

Note 1. When an interrupt generation period changes while the periodic interrupt is used, an interrupt might be generated at the completion of the setting. If the interrupt is generated immediately after the setting, the period is not guaranteed for two interrupts including the current interrupt.

Figure 22.13 Using the periodic interrupt function

22.6.3 RTCOUT (1-Hz/64-Hz) Clock Output

Stopping/restarting or resetting counter operation, reset by RTC software, and the 30-second adjustment by changing the RCR2 value affects the period of RTCOUT (1-Hz/64-Hz) output. When the time error adjustment function is used, the period of RTCOUT (1-Hz/64-Hz) output after adjustment is added or subtracted based on the adjustment value.

In HP mode (RCR4.ROPSEL = 01b), the 32.768 kHz clock input is multiplied to adjust the RTCOUT (1 Hz) output every second. This is output when the RTCOUT output is set to high precision (RCR4.RTCOHP = 1b). This enables observation of a high precision 1 Hz output every second. Table 22.7 shows a summary of RTCOUT output.

Table 22.7 Summary of RTCOUT output

Operation-mode	Interval	Function
NOR mode (RCR4.ROPSEL = 00)	1 Hz/64 Hz (RCR1.RTCOS = 0/1) (RCR4.RTCOHP = 0)	• Start/stop with time error adjustment function (automatic/ software) • Reconfigure by RTC software reset or 30-second adjustment function • High width is equal to low width in case of no time error adjustment function
LPC mode (RCR4.ROPSEL = 10)	1 Hz/64 Hz (RCR1.RTCOS = 0/1) (RCR4.RTCOHP = 0)	• Start/stop with time error adjustment function (automatic) • Reconfigure by RTC software reset or 30-second adjustment function • High width is equal to low width in case of no time error adjustment function
HP mode (RCR4.ROPSEL = 01)	1 Hz/64 Hz (RCR1.RTCOS = 0/1) (RCR4.RTCOHP = 0)	• Start/stop with time error adjustment function (automatic/ software) • Reconfigure by RTC software reset or 30-second adjustment function • High width is equal to low width in case of no time error adjustment function
	1 Hz with high precision (RCR4.RTCOHP = 1)	• Start/stop with time error adjustment function (automatic) • No support the reconfiguration by RTC software reset or 30-second adjustment function

Note: When reconfiguring time error adjustment while RTCA is running, the first interval of RTCOUT output is not guaranteed.
Note: In LPC-mode, due to low frequency operation, RTCOUT output may toggle more or less when automatic correction is executed. In order to use RTCOUT without this precaution, set 1 Hz output (RTCOS = 0) and correction value to less than 0.5 second only for additional adjustment (RADJ.ADJ = 0x40 and RADJ.PMADJ = 0x01).

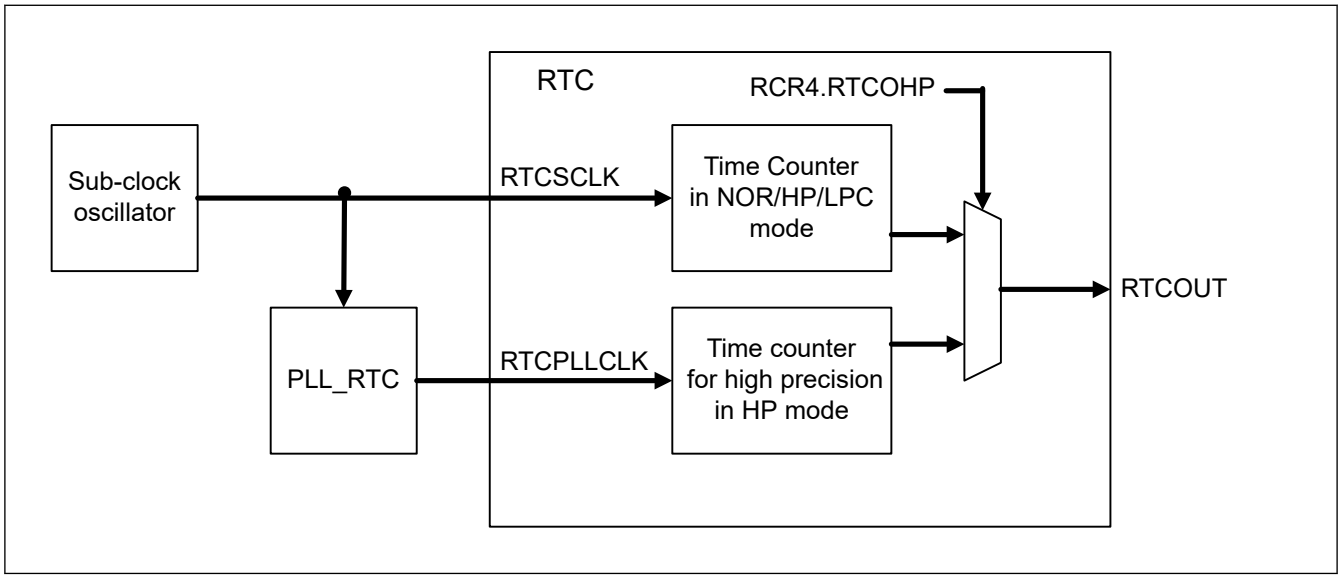

Figure 22.14 RTCOUT selection circuit

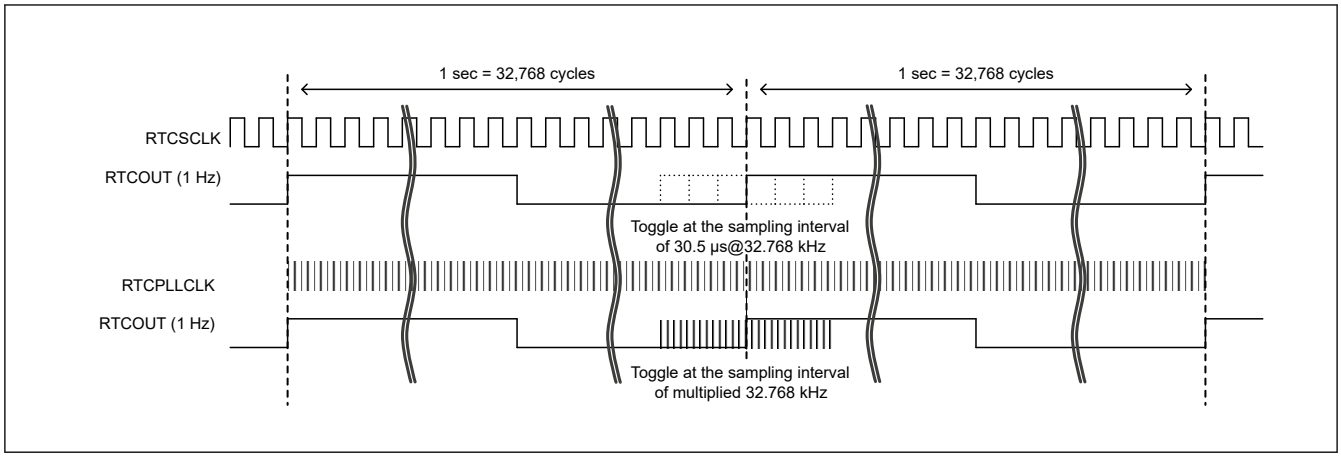

Figure 22.15 RTCOUT timing diagram

22.6.4 Transitions to Low Power Modes after Setting Registers

A transition to a low power state (Software Standby mode) during a write to an RTC register might corrupt the value of the register. After setting the register, confirm that the setting is in place before initiating a transition to a low power state.

22.6.5 Notes on Writing to and Reading from Registers

- When reading a counter register such as the second counter after writing to the counter register, follow the procedure in section 22.3.5. Reading 64-Hz Counter and Time.
- The value written to the count registers, alarm registers, year alarm enable register, bits RCR2.AADJE, AADJP, and HR24, RCR4 register, or frequency register is reflected when fourth read operations are performed after writing.
- The values written to the RCR1.CIE, RCR1.RTCOS, and RCR2.RTCOE bits can be read immediately after writing.
- To read the value from the timer counter after returning from a reset or a period in Software Standby mode, wait for 1/128 second while the clock is operating (RCR2.START bit = 1).
- After a reset is generated, write to the RTC register after 6 cycles of the count source clock have elapsed.
- When the power supply from the VRTC pin is stopped, setting an RTC related register is prohibited. Check that the VRTSR.VRTLVD bit is 1 (VRTC domain area is valid). For details on VRTSR.VRTLVD, see section 7.2.15. VRTSR : VRTC Status Register.

22.6.6 Changing the Count Mode

When changing the count mode (calendar count mode/binary count mode), set the RCR2.START bit to 0, stop the counting operation, then start it again from the initial setting. For details on the initial setting, see section 22.3.1. Outline of Initial Settings of Registers after Power On.

22.6.7 Time Capture Operation While Count Operation is Stopped

If the count operation is stopped while the edge detection setting of the time capture event is enabled, the value captured after the count operation starts cannot be guaranteed.

To avoid this, set the time capture control bits (RTCCR0.TCCT[1:0] bits) to 00b (no event detection) before stopping the count operation (RCR2.START bit is 1).

22.6.8 Initialization Procedure When the RTC Is Not to Be Used

Registers in the RTC are not initialized by a reset. Depending on the initial state, the generation of an unintentional interrupt request or operation of the counter might lead to increased power consumption.

For applications that do not require a realtime clock, initialize the registers by following the initialization procedure shown in Figure 22.16.

Alternatively, when the sub-clock oscillator is not used as the system clock or realtime clock, the counter can be stopped by writing 0 (sub-clock oscillator is selected) to the RCR4.RCKSEL bit and stopping the sub-clock oscillator. To stop the sub-clock oscillator, write 1 to the SOSCCR.SOSTP bit.

For details on the setting of the SOSCCR.SOSTP bit, see section 8, Clock Generation Circuit.

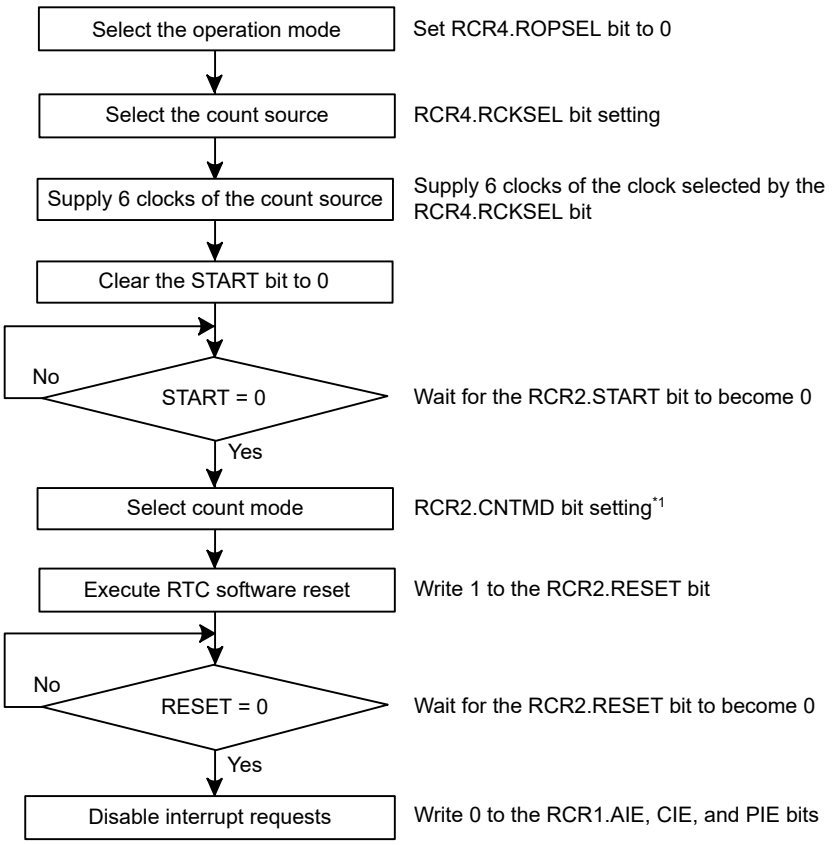

Note 1. This step is not necessary if the count mode is concurrently set by setting the START bit to 0.

Figure 22.16 Initialization procedure

23. Watchdog Timer (WDT)

23.1 Overview

The Watchdog Timer (WDT) is a 14-bit down counter that can be used to reset the MCU when the counter underflows because the system has run out of control and is unable to refresh the WDT. In addition, the WDT can be used to generate a non-maskable interrupt or an underflow interrupt.

Table 23.1 lists the WDT specifications and Figure 23.1 shows a block diagram.

Table 23.1 WDT specifications

Parameter	Specifications
Count source*1	Peripheral clock (PCLKB)
Clock division ratio	Division by 4, 64, 128, 512, 2048, or 8192
Counter operation	Counting down using a 14-bit down-counter
Condition for starting the counter	• Auto start mode: Counting automatically starts after a reset or after an underflow or refresh error occurs • Register start mode: Counting is started with a refresh by writing to the WDTRR register • Only secure developer can select Auto-start mode or Register-start mode
Conditions for stopping the counter	• Reset (the down-counter and other registers return to their initial values) • A counter underflows or a refresh error is generated
Window function	Window start and end positions can be specified (refresh-permitted and refresh-prohibited periods)
Watchdog timer reset sources	• Down-counter underflows • Refreshing outside the refresh-permitted period (refresh error)
Non-maskable interrupt/interrupt sources	• Down-counter underflows • Refreshing outside the refresh-permitted period (refresh error)
Reading of the counter value	The down-counter value can be read by the WDTSR register
Event link function (output)	• Down-counter underflow event output • Refresh error event output
Output signal (internal signal)	• Reset output • Interrupt request output • Sleep-mode count stop control output
TrustZone Filter	Security attribution can be set

Note 1. Satisfy the frequency of the peripheral module clock (PCLKB) ≥ 4 × (the frequency of the count clock source after division).

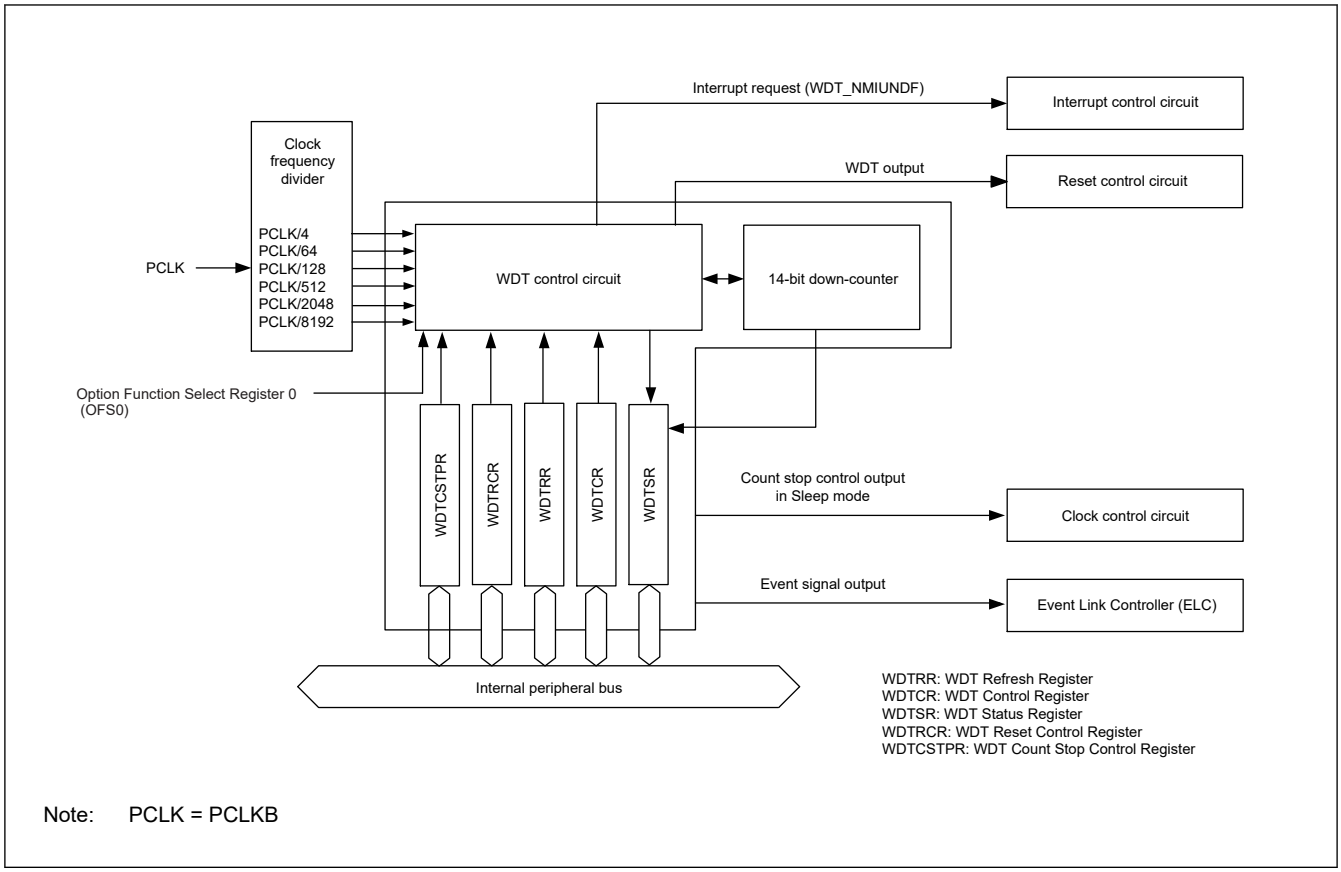

Figure 23.1 WDT block diagram

23.2 Register Descriptions

23.2.1 WDTRR : WDT Refresh Register

Base address: WDT = 0x4008_3400

Offset address: 0x00

Bit position:	7							0
Bit field:								
Value after reset:	1	1	1	1	1	1	1	1

Bit	Symbol	Function	R/W
7:0	n/a	The down-counter is refreshed by writing 0x00 and then writing 0xFF to this register.	R/W

The WDTRR register refreshes the down-counter of the WDT.

The down-counter of the WDT is refreshed by writing 0x00 and then writing 0xFF to WDTRR register (refresh operation) within the refresh-permitted period.

After the down-counter is refreshed, it starts counting down from the value selected by setting the WDT Timeout Period Select bits (OFS0.WDTTOPS[1:0]) in the Option Function Select Register 0 in auto start mode. In register start mode, counting down starts from the value selected by setting the Timeout Period Select bits (WDTCR.TOPS[1:0]) in the WDT Control Register.

When 0x00 is written, the read value is 0x00. When a value other than 0x00 is written, the read value is 0xFF. For details of the refresh operation, see section 23.3.3. Refresh Operation.

23.2.2 WDTCR : WDT Control Register

Base address: WDT = 0x4008_3400

Offset address: 0x02

Bit position:	15	14	13	12	11	10	9	8	7	6	5	4	3	2	1	0
Bit field:	—	—	RPSS[1:0]		—	—	RPES[1:0]		CKS[3:0]				—	—	TOPS[1:0]	
Value after reset:	0	0	1	1	0	0	1	1	1	1	1	1	0	0	1	1

Bit	Symbol	Function	R/W
1:0	TOPS[1:0]	Timeout Period Select 0 0: 1024 cycles (0x03FF) 0 1: 4096 cycles (0x0FFF) 1 0: 8192 cycles (0x1FFF) 1 1: 16384 cycles (0x3FFF)	R/W
3:2	—	These bits are read as 0. The write value should be 0.	R/W
7:4	CKS[3:0]	Clock Division Ratio Select 0x1: PCLKB/4 0x4: PCLKB/64 0xF: PCLKB/128 0x6: PCLKB/512 0x7: PCLKB/2048 0x8: PCLKB/8192 Others: Setting prohibited	R/W
9:8	RPES[1:0]	Window End Position Select 0 0: 75% 0 1: 50% 1 0: 25% 1 1: 0% (do not specify window end position).	R/W
11:10	—	These bits are read as 0. The write value should be 0.	R/W
13:12	RPSS[1:0]	Window Start Position Select 0 0: 25% 0 1: 50% 1 0: 75% 1 1: 100% (do not specify window start position).	R/W
15:14	—	These bits are read as 0. The write value should be 0.	R/W

The WDTCR register is used to set the clock division ratio, and window start and end positions for refresh, and the timeout period until the down-counter underflows in register start mode.

Some constraints apply to writes to the WDTCR register. For details, see section 23.3.2. Controlling Writes to the WDTCR, WDTRCR, and WDTCSTPR Registers.

In auto start mode, the settings in the WDTCR register are disabled, and the settings in the Option Function Select Register 0 (OFS0) are enabled. The settings for the WDTCR register can also be made in the OFS0 register. For details, see section 23.3.8. Association between Option Function Select Register 0 (OFS0) and WDT Registers.

TOPS[1:0] bits (Timeout Period Select)

The TOPS[1:0] bits select the timeout period, the period until the down-counter underflows, from 1024, 4096, 8192, and 16384 cycles, taking the divided clock specified in the CKS[3:0] bits as 1 cycle. After the down-counter is refreshed, the combination of the CKS[3:0] and TOPS[1:0] bits determines the number of PCLKB cycles until the counter underflows.

Table 23.2 lists the relationship between the CKS[3:0] and TOPS[1:0] bit settings, the timeout period, and the number of PCLKB cycles.

Table 23.2 Timeout period settings

CKS[3:0] bits	TOPS[1:0] bits	Clock division ratio	Timeout period (number of cycles)	PCLKB clock cycles
0x1	00b	PCLKB/4	1024	4096
	01b		4096	16384
	10b		8192	32768
	11b		16384	65536
0x4	00b	PCLKB/64	1024	65536
	01b		4096	262144
	10b		8192	524288
	11b		16384	1048576
0xF	00b	PCLKB/128	1024	131072
	01b		4096	524288
	10b		8192	1048576
	11b		16384	2097152
0x6	00b	PCLKB/512	1024	524288
	01b		4096	2097152
	10b		8192	4194304
	11b		16384	8388608
0x7	00b	PCLKB/2048	1024	2097152
	01b		4096	8388608
	10b		8192	16777216
	11b		16384	33554432
0x8	00b	PCLKB/8192	1024	8388608
	01b		4096	33554432
	10b		8192	67108864
	11b		16384	134217728

CKS[3:0] bits (Clock Division Ratio Select)

The CKS[3:0] bits specify the division ratio of the clock used for the down-counter. The division ratio can be selected from the PCLKB divided by 4, 64, 128, 512, 2048, and 8192. Combined with the TOPS[1:0] bit setting, this allows the WDT to be configured to a count period between 4096 and 134217728 PCLKB clock cycles.

RPES[1:0] bits (Window End Position Select)

The RPES[1:0] bits specify the window end position that indicates the refresh-permitted period. 75%, 50%, 25%, or 0% of the timeout period can be selected for the window end position. Set the window end position to a value less than the value for the window start position (window start position > window end position). If the window start position is set to a value less than or equal to the window end position, the window start position setting is enabled and the window end position is set to 0%.

RPSS[1:0] bits (Window Start Position Select)

The RPSS[1:0] bits specify the window start position that indicates the refresh-permitted period. 100%, 75%, 50%, or 25% of the timeout period can be selected for the window start position. Set the window start position to a value greater than the value for the window end position. If the window start position is set to a value less than or equal to the window end position, the window start position setting is enabled and the window end position is set to 0%.

Table 23.3 lists the counter values for the window start and end positions, and Figure 23.2 shows the refresh-permitted period set in the RPSS[1:0], RPES[1:0], and TOPS[1:0] bits.

Table 23.3 Relationship between the timeout period and window start and end counter values

	Timeout period		Window start and end counter value			
TOPS[1:0]	**Cycles**	**Counter value**	**100%**	**75%**	**50%**	**25%**
00b	1024	0x03FF	0x03FF	0x02FF	0x01FF	0x00FF
01b	4096	0x0FFF	0x0FFF	0x0BFF	0x07FF	0x03FF
10b	8192	0x1FFF	0x1FFF	0x17FF	0x0FFF	0x07FF
11b	16384	0x3FFF	0x3FFF	0x2FFF	0x1FFF	0x0FFF

RPSS[1:0] bits		RPES[1:0] bits		Window	
b13	b12	b9	b8	Start (%)	End (%)
1	1	1	1	100	0
		1	0		25
		0	1		50
		0	0		75
1	0	1	1	75	0
		1	0		25
		0	1		50
		0	0		75
0	1	1	1	50	0
		1	0		25
		0	1		50
		0	0		75
0	0	1	1	25	0
		1	0		25
		0	1		50
		0	0		75

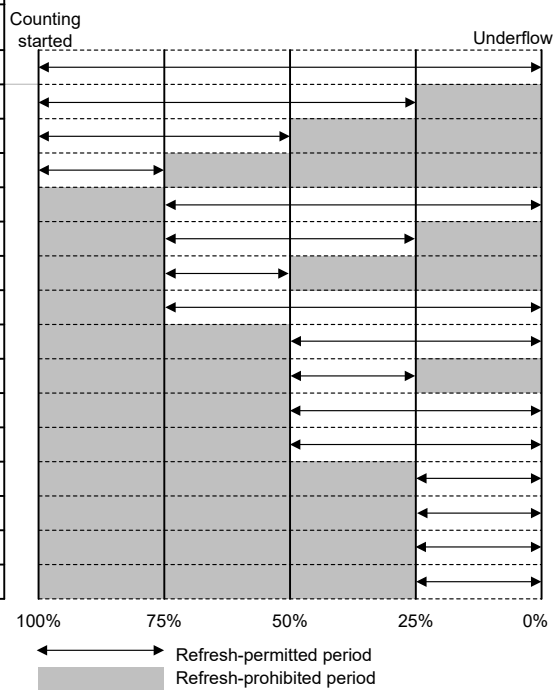

Note: If window end position setting ≥ window start position setting, the window end position setting is set to 0%.

Figure 23.2 RPSS[1:0] and RPES[1:0] bits setting and refresh-permitted period

23.2.3 WDTSR : WDT Status Register

Base address: WDT = 0x4008_3400

Offset address: 0x04

Bit position:	15	14	13	12	11	10	9	8	7	6	5	4	3	2	1	0
Bit field:	REFEF	UNDFF	CNTVAL[13:0]													
Value after reset:	0	0	0	0	0	0	0	0	0	0	0	0	0	0	0	0

Bit	Symbol	Function	R/W
13:0	CNTVAL[13:0]	Down-Counter Value Value counted by the down-counter	R
14	UNDFF	Underflow Flag 0: No underflow occurred 1: Underflow occurred	R/W*1

Bit	Symbol	Function	R/W
15	REFEF	Refresh Error Flag 0: No refresh error occurred 1: Refresh error occurred	R/W*1

Note 1. Only 0 can be written to clear the flag.

The WDTSR register indicates the counter value of the down-counter and the status of whether an underflow or refresh error occurred in the down-counter.

CNTVAL[13:0] bits (Down-Counter Value)

Read the CNTVAL[13:0] bits to confirm the value of the down-counter. The read value might differ from the actual count by 1.

UNDFF flag (Underflow Flag)

Read the UNDFF flag to confirm whether an underflow occurred in the counter. A value of 1 indicates that the down counter underflowed. Write 0 to the flag to set the value to 0. Writing 1 has no effect.

Clearing of the UNDFF flag takes (N+1) PCLKB cycles. In addition, clearing of the flag is ignored for (N+1) PCLKB cycles after an underflow. N is specified in the WDTCR.CKS[3:0] bits as follows:

- When WDTCR.CKS[3:0] = 0x1, N = 4
- When WDTCR.CKS[3:0] = 0x4, N = 64
- When WDTCR.CKS[3:0] = 0xF, N = 128
- When WDTCR.CKS[3:0] = 0x6, N = 512
- When WDTCR.CKS[3:0] = 0x7, N = 2048
- When WDTCR.CKS[3:0] = 0x8, N = 8192

REFEF flag (Refresh Error Flag)

Read the REFEF flag to confirm whether a refresh error occurred, indicating that a refresh operation was performed during a prohibited period. A value of 1 indicates that a refresh error occurred. Write 0 to the flag to set the value to 0. Writing 1 has no effect.

Clearing of the REFEF flag takes (N+1) PCLKB cycles. In addition, clearing of the flag is ignored for (N+1) PCLKB cycles after a refresh error. N is specified in the WDTCR.CKS[3:0] bits as follows:

- When WDTCR.CKS[3:0] = 0x1, N = 4
- When WDTCR.CKS[3:0] = 0x4, N = 64
- When WDTCR.CKS[3:0] = 0xF, N = 128
- When WDTCR.CKS[3:0] = 0x6, N = 512
- When WDTCR.CKS[3:0] = 0x7, N = 2048
- When WDTCR.CKS[3:0] = 0x8, N = 8192

23.2.4 WDTRCR : WDT Reset Control Register

Base address: WDT = 0x4008_3400

Offset address: 0x06

Bit position:	7	6	5	4	3	2	1	0
Bit field:	RSTIRQS	—	—	—	—	—	—	—
Value after reset:	1	0	0	0	0	0	0	0

Bit	Symbol	Function	R/W
6:0	—	These bits are read as 0. The write value should be 0.	R/W

Bit	Symbol	Function	R/W
7	RSTIRQS	WDT Behavior Selection 0: Interrupt 1: Reset	R/W

The WDTRCR register controls reset output by a WDT down-counter underflow or interrupt request output.

Some constraints apply to writes to the WDTRCR register. For details, see section 23.3.2. Controlling Writes to the WDTCR, WDTRCR, and WDTCSTPR Registers.

In auto start mode, the WDTRCR register settings are disabled, and the settings in the Option Function Select register 0 (OFS0) are enabled. The settings for the WDTRCR register can also be made for the OFS0 register. For details, see section 23.3.8. Association between Option Function Select Register 0 (OFS0) and WDT Registers.

23.2.5 WDTCSTPR : WDT Count Stop Control Register

Base address: WDT = 0x4008_3400

Offset address: 0x08

Bit position:	7	6	5	4	3	2	1	0
Bit field:	SLCSTP	—	—	—	—	—	—	—
Value after reset:	1	0	0	0	0	0	0	0

Bit	Symbol	Function	R/W
6:0	—	These bits are read as 0. The write value should be 0.	R/W
7	SLCSTP	Sleep-Mode Count Stop Control Register 0: Disable count stop 1: Stop count on transition to Sleep mode	R/W

The WDTCSTPR register controls whether to stop the WDT counter in Sleep mode. Some constraints apply to writes to the WDTCSTPR register. For details, see section 23.3.2. Controlling Writes to the WDTCR, WDTRCR, and WDTCSTPR Registers.

In auto start mode, the WDTCSTPR register settings are disabled, and the settings in the Option Function Select register 0 (OFS0) are enabled. The settings for the WDTCSTPR register can also be made for the OFS0 register. For details, see section 23.3.8. Association between Option Function Select Register 0 (OFS0) and WDT Registers.

SLCSTP bit (Sleep-Mode Count Stop Control Register)

The SLCSTP bit selects whether to stop counting on transition to Sleep mode.

23.2.6 Option Function Select Register 0 (OFS0)

For information on the OFS0 register, see section 23.3.8. Association between Option Function Select Register 0 (OFS0) and WDT Registers.

23.3 Operation

23.3.1 Count Operation in each Start Mode

The WDT has two start modes:

- Auto start mode, in which counting automatically starts after a release from the reset state
- Register start mode, in which counting starts with a refresh by writing to the register.

In auto start mode, counting automatically starts after a release from the reset state according to the settings in the Option Function Select register 0 (OFS0) in the flash.

In register start mode, counting starts with a refresh by writing to the WDTRR register after the respective registers are set after a release from the reset state.

Select auto start mode or register start mode by setting the WDT Start Mode Select bit (OFS0.WDTSTRT) in the OFS0 register.

When the auto start mode is selected, the settings in the WDT Control Register (WDTCR), WDT Reset Control Register (WDTRCR), and WDT Count Stop Control Register (WDTCSTPR) are disabled while the settings in the OFS0 register are enabled.

When the register start mode is selected, the setting for the OFS0 register is disabled while the settings for the WDT Control Register (WDTCR), WDT Reset Control Register (WDTRCR), and WDT Count Stop Control Register (WDTCSTPR) are enabled.

23.3.1.1 Register start mode

When the WDT Start Mode Select bit (OFS0.WDTSTRT) is 1, register start mode is selected, the OFS0 register setting is invalid, and the WDT control register (WDTCR), WDT Reset Control Register (WDTRCR), and WDT Count Stop Control Register (WDTCSTPR) are enabled.

After the reset state is released, set the following:

- Clock division ratio in the WDTCR register
- Window start and end positions in the WDTCR register
- Timeout period in the WDTCR register
- Reset output or interrupt request output in the WDTRCR register
- Counter stop control during transitions to Sleep mode in the WDTCSTPR register

The WDT refresh register (WDTRR) refreshes the down counter. As a result, the downcount starts at the value set by the timeout period selection bit (WDTCR.TOPS[1:0]).

Thereafter, as long as the counter is refreshed in the refresh-permitted period, the value in the counter is reset each time the counter is refreshed and counting down continues. The WDT does not output the reset signal or non-maskable interrupt request/interrupt request as long as counting continues. However, if the down-counter underflows because the down-counter cannot be refreshed due to a program runaway, or if a refresh error occurs because the counter was refreshed outside the refresh-permitted period, the WDT outputs the reset signal or a non-maskable interrupt request/interrupt request (WDT_NMIUNDF). Reset output or interrupt request output can be selected in the WDT Reset Interrupt Request Select bit (WDTRCR.RSTIRQS). The interrupt enabled for operating the NMI can be selected in the WDT Underflow/Refresh Error Interrupt Enable bit (NMIER.WDTEN).

Figure 23.3 shows an example of operation under the following conditions:

- Register start mode (OFS0.WDTSTRT = 1)
- WDT reset interrupt request selection (WDTRCR.RSTIRQS = 1)
- The window start position is 75% (WDTCR.RPSS[1:0] = 10b)
- The window end position is 25% (WDTCR.RPES[1:0] = 10b)

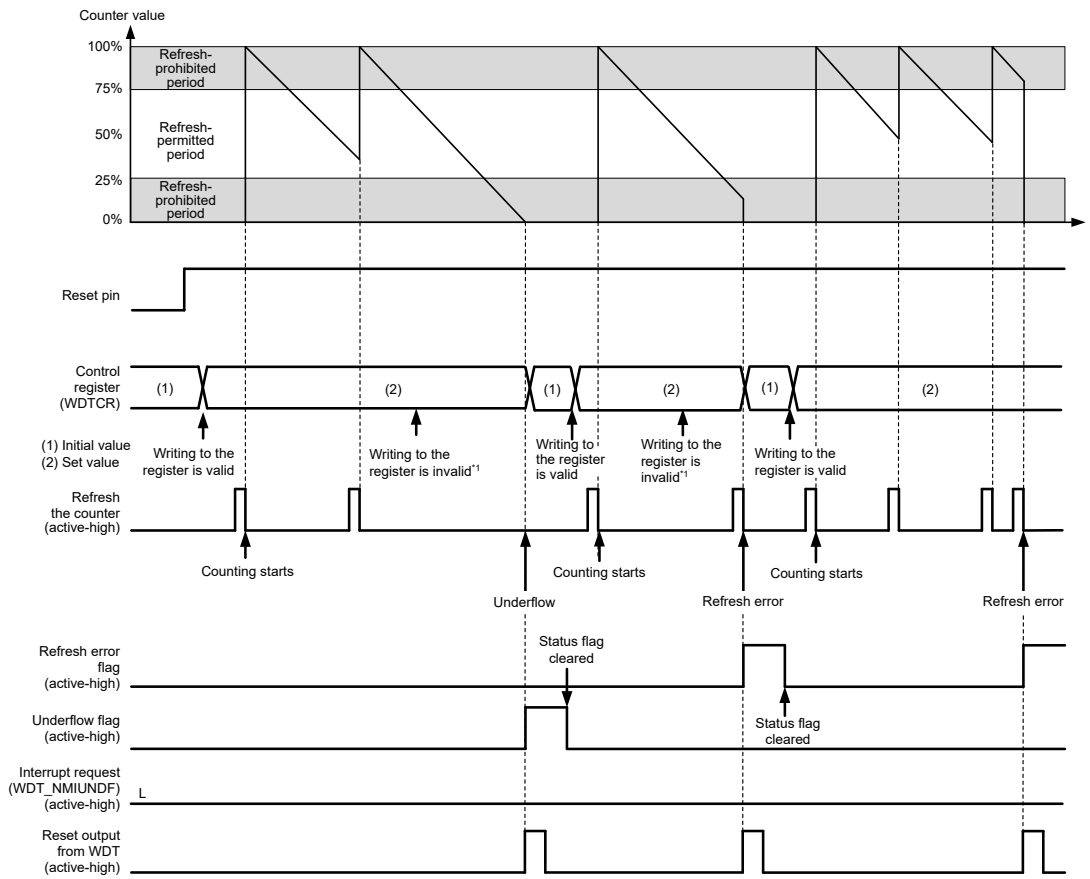

Note: Refreshing the counter requires up to 4 count signal cycles from refresh request to execution.
Note 1. See section 23.3.2. Controlling Writes to the WDTCR, WDTRCR, and WDTCSTPR Registers.
Reset pin = RES

Figure 23.3 Operation example in register start mode

23.3.1.2 Auto start mode

When the WDT Start Mode Select bit (OFS0.WDTSTRT) in the Option Function Select Register 0 (OFS0) is 0, auto start mode is selected, the WDT Control Register (WDTCR), WDT Reset Control Register (WDTRCR), and WDT Count Stop Control Register (WDTCSTPR) are disabled, and the settings in the OFS0 register are enabled.

Within the reset state, the setting values for the following in the Option Function Select Register 0 (OFS0) are set in the WDT registers:

- Clock division ratio
- Window start and end positions
- Timeout period
- Reset output or interrupt request
- Counter stop control during transition to Sleep mode

When the reset state is released, the down-counter automatically starts counting down from the value set in the WDT Timeout Period Select bits (OFS0.WDTTOPS[1:0]).

Thereafter, as long as the counter is refreshed in the refresh-permitted period, the value in the counter is reset each time the counter is refreshed and counting down continues. The WDT does not output the reset signal or non-maskable interrupt

request/interrupt request (WDT_NMIUNDF) as long as the counting continues. However, if the down-counter underflows because refreshing of the down-counter is not possible due to a runaway program or if a refresh error occurs due to refreshing outside the refresh-permitted period, the WDT outputs the reset signal or non-maskable interrupt request/interrupt request (WDT_NMIUNDF).

After the reset signal or non-maskable interrupt request/interrupt request is generated, the counter reloads the timeout period after counting for 1 cycle. The value of the timeout period is set in the down-counter and counting restarts.

Reset output or interrupt request output can be selected by setting the WDT Reset Interrupt Request Select bit (OFS0.WDTRSTIRQS). Non-maskable interrupt request or interrupt request can be selected in the WDT Underflow/ Refresh Error Interrupt Enable bit (NMIER.WDTEN).

Figure 23.4 shows an example of operation (non-maskable interrupt) under the following conditions:

- Auto start mode (OFS0.WDTSTRT = 0)
- WDT behavior selection: interrupt (OFS0.WDTRSTIRQS = 0)
- Non-maskable Interrupt: WDT Underflow/Refresh Error Interrupt Enabled (NMIER.WDTEN = 1)
- The window start position is 75% (OFS0.WDTRPSS[1:0] = 10b)
- The window end position is 25% (OFS0.WDTRPES[1:0] = 10b)

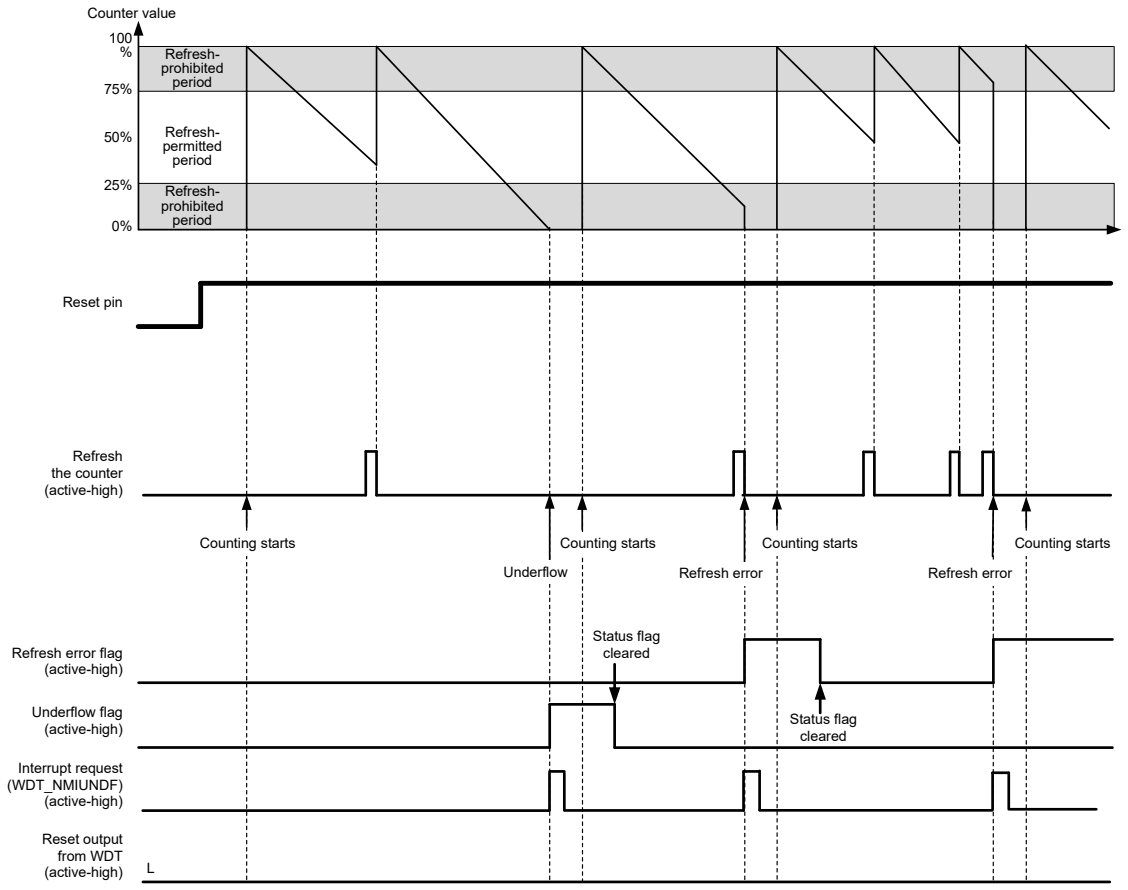

Note: Refreshing the counter requires up to 4 count signal cycles from refresh request to execution.
Note: Reset pin = RES

Figure 23.4 Operation example in auto start mode

23.3.2 Controlling Writes to the WDTCR, WDTRCR, and WDTCSTPR Registers

Writing to the WDT Control Register (WDTCR), WDT Reset Control Register (WDTRCR), or WDT Count Stop Control Register (WDTCSTPR) is possible once each between the release from the reset state and the first refresh operation.

After a refresh (counting starts) or a write to WDTCR, WDTRCR or WDTCSTPR register, the protection signal in the WDT becomes 1 to protect WDTCR, WDTRCR and WDTCSTPR register against subsequent write attempts. This protection is released by the reset source of the WDT. With other reset sources, the protection is not released.

Figure 23.5 shows control waveforms produced in response to writing to the WDTCR.

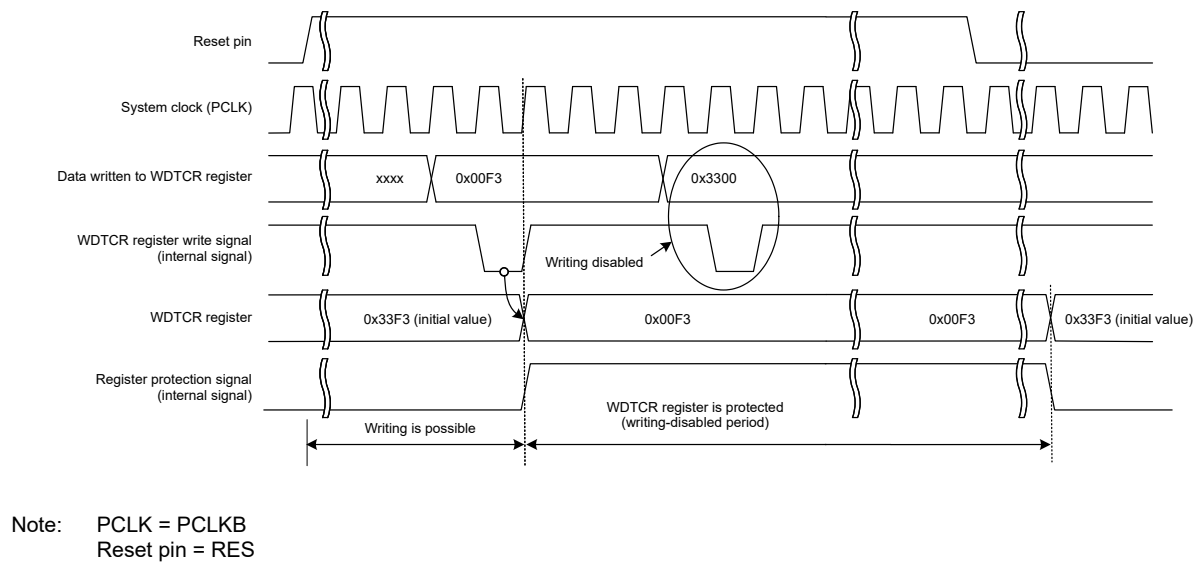

Figure 23.5 Control waveforms produced in response to writes to the WDTCR register

23.3.3 Refresh Operation

To refresh the down counter and start the counting operation, write to the WDT Refresh Register (WDTRR) in the order of values from 0x00 to 0xFF. If a value other than 0xFF is written after 0x00, the down-counter is not refreshed. If an invalid value is written, refreshing is performed normally by writing to the WDTRR register in the order of values from 0x00 to 0xFF.

Correct refreshing is also performed when a register other than WDTRR is accessed or WDTRR is read between writing 0x00 and writing 0xFF to WDTRR. Writes to refresh the counter must be made within the refresh-permitted period, and this is determined by the 0xFF write. For this reason, correct refreshing is performed even when 0x00 is written outside the refresh-permitted period.

[Example write sequences that are valid for refreshing the counter]

- 0x00 → 0xFF
- 0x00 ((n–1)th time) → 0x00 (nth time) → 0xFF
- 0x00 → access to another register or read from WDTRR → 0xFF

[Example write sequences that are invalid for refreshing the counter]

- 0x23 (a value other than 0x00) → 0xFF
- 0x00 → 0x54 (a value other than 0xFF)
- 0x00 → 0xAA (0x00 and a value other than 0xFF) → 0xFF

After 0xFF is written to the WDT Refresh Register (WDTRR), refreshing the down-counter requires up to 4 cycles of the signal for counting. To meet this requirement, complete writing 0xFF to WDTRR 4 count cycles before the down-counter underflows.

Figure 23.6 shows the WDT refresh-operation waveforms when the clock division ratio is PCLKB/64.

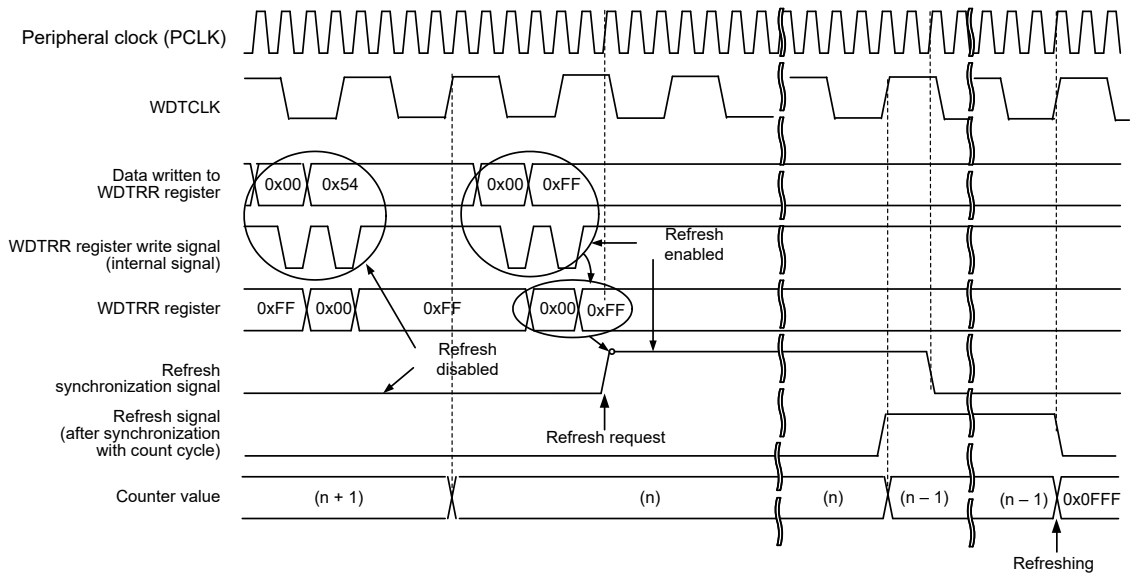

Note: PCLK = PCLKB

Figure 23.6 WDT refresh operation waveforms when WDTCR.CKS[3:0] = 0x4 and WDTCR.TOPS[1:0] = 01b

Note: When setting the refresh time, consider the oscillation accuracy of the clock sources of the PCLKB and WDTCLK. Set values which ensure that refreshing is possible even when the frequency varies in the range of error of the oscillation accuracy.

23.3.4 Status Flags

The refresh error (WDTSR.REFEF) and underflow (WDTSR.UNDFF) flags retain the source of the interrupt request from the WDT. After a release from the interrupt request generation, read the WDTSR.REFEF and WDTSR.UNDFF flags to check for the interrupt source. For each flag, writing 0 clears the bit. Writing 1 has no effect. Leaving the status flags unchanged does not affect operation. If the flags are not cleared at the next interrupt request from the WDT, the earlier interrupt source is cleared and the new interrupt source is written. For the time period between when 0 is written in each flag and when its value is reflected, see section 23.2.3. WDTSR : WDT Status Register.

23.3.5 Reset Output

When the Reset Interrupt Select bit (WDTRCR.RSTIRQS) is set to 1 in register start mode, or when the WDT Reset Interrupt Request Select bit (OFS0.WDTRSTIRQS) in the Option Function Select Register 0 (OFS0) is set to 1 in auto start mode, a reset signal is output for 1 cycle count when an underflow in the down-counter or a refresh error occurs.

In register start mode, the down-counter is initialized (all bits set to 0) and stopped in that state after output of a reset signal. After the reset state is released and the program is restarted, the counter is set up again and counting down starts again with a refresh. In auto start mode, counting down starts automatically after the reset state is released.

23.3.6 Interrupt Sources

When the Reset Interrupt Select bit (WDTRCR.RSTIRQS) is set to 0 in register start mode or when the WDT Reset Interrupt Request Select bit (OFS0.WDTRSTIRQS) in the Option Function Select Register 0 (OFS0) is set to 0 in auto start mode, an interrupt (WDT_NMIUNDF) signal is generated when an underflow in the counter or a refresh error occurs. This interrupt can be used as a non-maskable interrupt or an interrupt. For details, see section 12, Interrupt Controller Unit (ICU).

Table 23.4 WDT interrupt source

Name	Interrupt source	Interrupt to CPU	Start DMAC or DTC
WDT_NMIUNDF	• Down-counter underflow • Refresh error	Possible	Not possible

23.3.7 Reading the Down-Counter Value

The WDT stores the counter value in the down-counter value bits (WDTSR.CNTVAL[13:0]) of the WDT Status Register. Check these bits to obtain the counter value. The read value of the down-counter might differ from the actual count by one.

Figure 23.7 shows the processing for reading the WDT down-counter value when the clock division ratio is PCLKB/64.

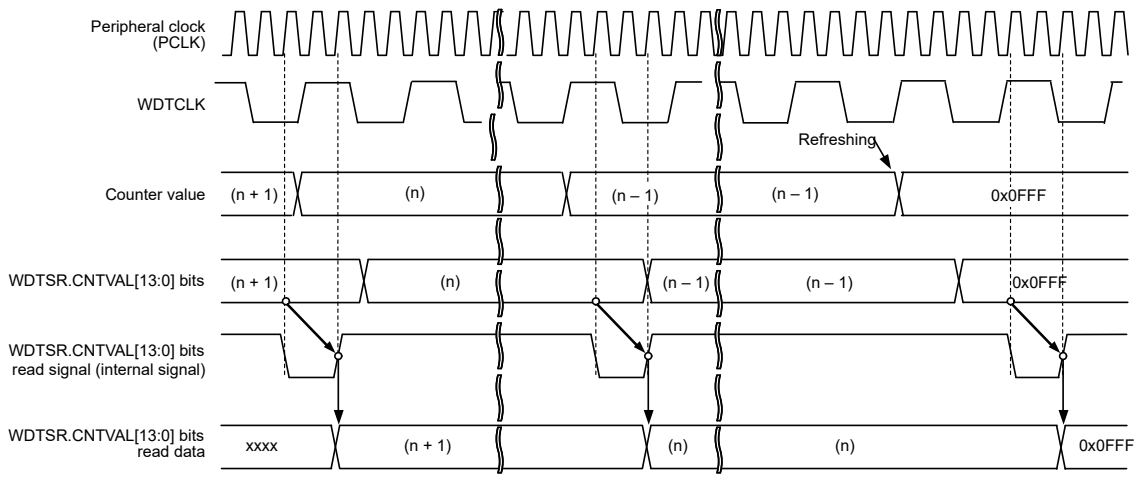

Note: PCLK = PCLKB

Figure 23.7 Processing for reading WDT down-counter value when WDTCR.CKS[3:0] = 0x4 and WDTCR.TOPS[1:0] = 01b

23.3.8 Association between Option Function Select Register 0 (OFS0) and WDT Registers

Table 23.5 lists the association between the Option Function Select Register 0 (OFS0) used in auto start mode, and the registers used in register start mode. For details on the Option Function Select Register 0 (OFS0), see section 6.2.1. OFS0 : Option Function Select Register 0.

Table 23.5 Association between Option Function Select Register 0 (OFS0) and the WDT registers

Control target	Function	OFS0 register (enabled in auto start mode) OFS0.WDTSTRT = 0	WDT registers (enabled in register start mode) OFS0.WDTSTRT = 1
Down-counter	Timeout period selection	OFS0.WDTTOPS[1:0]	WDTCR.TOPS[1:0]
	Clock division ratio selection	OFS0.WDTCKS[3:0]	WDTCR.CKS[3:0]
	Window start position selection	OFS0.WDTRPSS[1:0]	WDTCR.RPSS[1:0]
	Window end position selection	OFS0.WDTRPES[1:0]	WDTCR.RPES[1:0]
Reset output or interrupt request output	Select a reset interrupt request	OFS0.WDTRSTIRQS	WDTRCR.RSTIRQS
Count stop	Sleep mode count stop control	OFS0.WDTSTPCTL	WDTCSTPR.SLCSTP

23.4 Output to the Event Link Controller (ELC)

The WDT is capable of a link operation for the previously specified module when interrupt request signal is used as an event signal by the ELC. The event signal is output by the counter underflow and refresh error. An event signal is output regardless of the setting of the Reset Interrupt Request Select bit (WDTRCR.RSTIRQS) in register start mode or auto start mode. An event signal can also be output when the next interrupt source is generated while the Refresh Error flag (WDTSR.REFEF) or Underflow flag (WDTSR.UNDFF) is 1. For details, see section 17, Event Link Controller (ELC).

23.5 Usage Notes

23.5.1 ICU Event Link Setting Register n (IELSRn) Setting

Setting 0x53 to ICU Event Link Setting Register n (ICU.IELSRn) is prohibited when WDT reset interrupt request selection resets (OFS0.WDTRSTIRQS = 0 or WDTRCR.RSTIRQS = 0) or when enabling event link operation (ELSRn.ELS[8:0] = 0x53).

24. Independent Watchdog Timer (IWDT)

24.1 Overview

The Independent Watchdog Timer (IWDT) consists of a 14-bit down counter that must be serviced periodically to prevent counter underflow. The IWDT provides functionality to reset the MCU or to generate a non-maskable interrupt or an underflow interrupt. Because the timer operates with an independent, dedicated clock source, it is particularly useful in returning the MCU to a known state as a fail-safe mechanism when the system runs out of control. The IWDT can be triggered automatically by a reset, underflow, refresh error, or a refresh of the count value in the registers.

The IWDT functions differ from those of the WDT in the following respects:

- The divided IWDT-dedicated clock (IWDTCLK) is used as the count source (not affected by PCLKB)
- IWDT does not support register start mode

Table 24.1 lists the IWDT specifications and Figure 24.1 shows a block diagram.

Table 24.1 IWDT specifications

Parameter	Description
Count source*1	IWDT-dedicated clock (IWDTCLK)
Clock division ratio	Division by 1, 16, 32, 64, 128, or 256
Counter operation	Counting down using a 14-bit down-counter
Condition for starting the counter	● Counting automatically starts after a reset ● Only secure developer can start the IWDT
Conditions for stopping the counter	● Reset (the down-counter and other registers return to their initial values) ● A counter underflow or a refresh error is generated (counting restarts automatically).
Window function	Window start and end positions can be specified (refresh-permitted and refresh-prohibited periods)
Reset output sources	● Down-counter underflows ● Refreshing outside the refresh-permitted period (refresh error).
Non-maskable interrupt/interrupt sources	● Down-counter underflows ● Refreshing outside the refresh-permitted period (refresh error).
Reading the counter value	The down-counter value can be read by the IWDTSR register
Event link function	● Down-counter underflow event output ● Refresh error event output.
Output signal (internal signal)	● Reset output ● Interrupt request output ● Sleep-mode count stop control output.
Auto start mode	Configurable to the following triggers: ● Clock frequency division ratio after a reset (OFS0.IWDTCKS[3:0] bits) ● Timeout period of the Independent Watchdog Timer (OFS0.IWDTTOPS[1:0] bits) ● Window start position in the Independent Watchdog Timer (OFS0.IWDTRPSS[1:0] bits) ● Window end position in the Independent Watchdog Timer (OFS0.IWDTRPES[1:0] bits) ● Reset output or interrupt request output (OFS0.IWDTRSTIRQS bit) ● Down-count stop function at transition to Sleep, Snooze, or Software Standby mode (OFS0.IWDTSTPCTL bit).
TrustZone Filter	Security attribution can be set

Note 1. Satisfy the frequency of the peripheral module clock (PCLKB) ≥ 4 × (the frequency of the count clock source after division).

The bus interface and registers operate with PCLKB, and the 14-bit counter and control circuits operate with IWDTCLK.

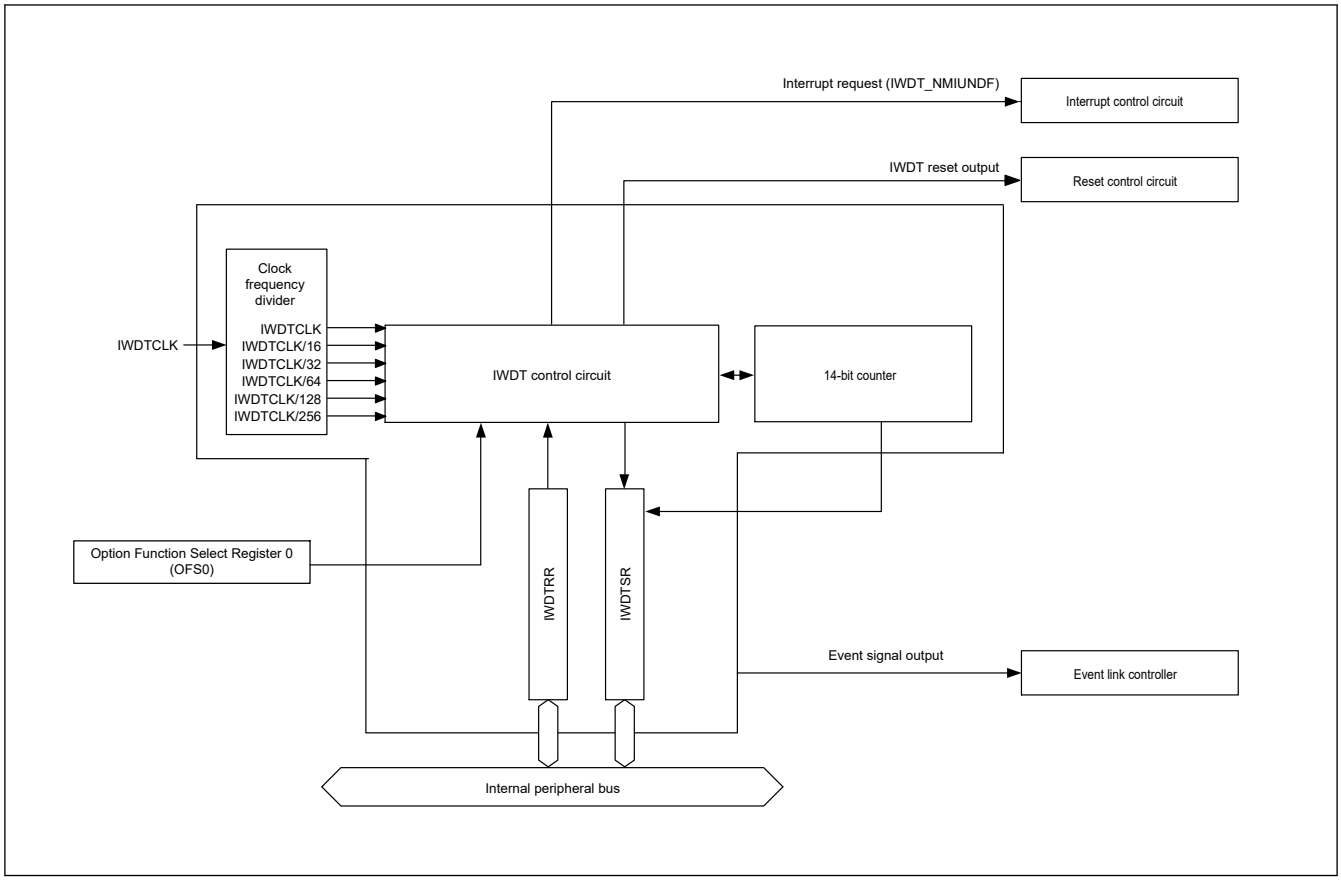

Figure 24.1 IWDT block diagram

24.2 Register Descriptions

24.2.1 IWDTRR : IWDT Refresh Register

Base address: IWDT = 0x4008_3200

Offset address: 0x00

Bit position:	7							0
Bit field:								
Value after reset:	1	1	1	1	1	1	1	1

Bit	Symbol	Function	R/W
7:0	n/a	The down-counter is refreshed by writing 0x00 and then writing 0xFF to this register	R/W

The IWDTRR register refreshes the down-counter of the IWDT. The down-counter of the IWDT is refreshed by writing 0x00 and then writing 0xFF to IWDTRR (refresh operation) within the refresh-permitted period. After the down-counter is refreshed, it starts counting down from the value selected in the IWDT Timeout Period Select bits (OFS0.IWDTTOPS[1:0]) in the Option Function Select Register 0 (OFS0).

When 0x00 is written, the read value is 0x00. When a value other than 0x00 is written, the read value is 0xFF. For details of the refresh operation, see section 24.3.2. Refresh Operation.

24.2.2 IWDTSR : IWDT Status Register

Base address: IWDT = 0x4008_3200

Offset address: 0x04

Bit position:	15	14	13	12	11	10	9	8	7	6	5	4	3	2	1	0
Bit field:	REFEF	UNDFF	CNTVAL[13:0]													
Value after reset:	0	0	0	0	0	0	0	0	0	0	0	0	0	0	0	0

Bit	Symbol	Function	R/W
13:0	CNTVAL[13:0]	Down-counter Value Value counted by the down-counter	R
14	UNDFF	Underflow Flag 0: No underflow occurred 1: Underflow occurred	R/W*1
15	REFEF	Refresh Error Flag 0: No refresh error occurred 1: Refresh error occurred	R/W*1

Note 1. Only 0 can be written to clear the flag.

The IWDTSR register indicates the counter value of the down-counter and whether an underflow or refresh error occurred in the down-counter.

CNTVAL[13:0] bits (Down-counter Value)

Read the CNTVAL[13:0] bits to confirm the value of the down-counter. The read value might differ from the actual count by 1.

UNDFF flag (Underflow Flag)

Read the UNDFF flag to confirm whether an underflow occurred in the down-counter. The value 1 indicates that the down-counter underflowed. Write 0 to the UNDFF flag to set the value to 0. Writing 1 has no effect.

Clearing of the UNDFF flag takes (N + 2) IWDTCLK cycles and 2 PCLKB cycles. In addition, clearing of this flag is ignored for (N + 2) IWDTCLK cycles after an underflow. N is specified in the IWDTCKS[3:0] bits as follows:

- When OFS0.IWDTCKS[3:0] = 0x0, N = 1
- When OFS0.IWDTCKS[3:0] = 0x2, N = 16
- When OFS0.IWDTCKS[3:0] = 0x3, N = 32
- When OFS0.IWDTCKS[3:0] = 0x4, N = 64
- When OFS0.IWDTCKS[3:0] = 0xF, N = 128
- When OFS0.IWDTCKS[3:0] = 0x5, N = 256.

REFEF flag (Refresh Error Flag)

Read the REFEF flag to confirm whether a refresh error occurred. This indicates that a refresh operation was performed during a prohibited period. The value 1 indicates that a refresh error occurred. Write 0 to the REFEF flag to set the value to 0. Writing 1 has no effect.

Clearing of the REFEF flag takes (N + 2) IWDTCLK cycles and 2 PCLKB cycles. In addition, clearing of this flag is ignored for (N + 2) IWDTCLK cycles following a refresh error. N is specified in the IWDTCKS[3:0] bits as follows:

- When OFS0.IWDTCKS[3:0] = 0x0, N = 1
- When OFS0.IWDTCKS[3:0] = 0x2, N = 16
- When OFS0.IWDTCKS[3:0] = 0x3, N = 32
- When OFS0.IWDTCKS[3:0] = 0x4, N = 64
- When OFS0.IWDTCKS[3:0] = 0xF, N = 128
- When OFS0.IWDTCKS[3:0] = 0x5, N = 256.

24.2.3 OFS0 : Option Function Select Register 0

For information on the Option Function Select Register 0 (OFS0), see section 6.2.1. OFS0 : Option Function Select Register 0.

IWDTTOPS[1:0] bits (IWDT Timeout Period Select)

The IWDTTOPS[1:0] bits select the timeout period, that is, the period until the down-counter underflows, from 128, 512, 1024, or 2048 cycles, taking the divided clock specified in the IWDTCKS[3:0] bits as 1 cycle.

After the down-counter is refreshed, the combination of the IWDTCKS[3:0] and IWDTTOPS[1:0] bits determines the number of IWDTCLK cycles until the counter underflows.

Table 24.2 lists the relationship between the IWDTCKS[3:0] and IWDTTOPS[1:0] bit settings, the timeout period, and the number of IWDTCLK cycles.

Table 24.2 Timeout period settings

IWDTCKS[3:0] bits				IWDTTOPS[1:0] bits		Clock division ratio	Timeout period (number of cycles)	IWDTCLK cycles
b7	b6	b5	b4	b3	b2			
0	0	0	0	0	0	IWDTCLK	128	128
				0	1		512	512
				1	0		1024	1024
				1	1		2048	2048
0	0	1	0	0	0	IWDTCLK/16	128	2048
				0	1		512	8192
				1	0		1024	16384
				1	1		2048	32768
0	0	1	1	0	0	IWDTCLK/32	128	4096
				0	1		512	16384
				1	0		1024	32768
				1	1		2048	65536
0	1	0	0	0	0	IWDTCLK/64	128	8192
				0	1		512	32768
				1	0		1024	65536
				1	1		2048	131072
1	1	1	1	0	0	IWDTCLK/128	128	16384
				0	1		512	65536
				1	0		1024	131072
				1	1		2048	262144
0	1	0	1	0	0	IWDTCLK/256	128	32768
				0	1		512	131072
				1	0		1024	262144
				1	1		2048	524288

IWDTCKS[3:0] bits (IWDT-Dedicated Clock Frequency Division Ratio Select)

The IWDTCKS[3:0] bits specify the division ratio of the clock used for the down-counter. The division ratio can be selected from the IWDT-dedicated clock (IWDTCLK) divided by 1, 16, 32, 64, 128, and 256. Combined with the IWDTTOPS[1:0] bit setting, the IWDT can be configured to a count period between 128 and 524,288 IWDTCLK cycles.

IWDTRPES[1:0] bits (IWDT Window End Position Select)

The IWDTRPES[1:0] bits specify the window end position that indicates the refresh-permitted period. 75%, 50%, 25%, or 0% of the timeout period can be selected for the window end position. Set the window end position to a value less than the window start position (window start position > window end position). If the window start position is set to a value less than or equal to the window end position, the window start position setting is enabled and the window end position is set to 0%.

IWDTRPSS[1:0] bits (IWDT Window Start Position Select)

The IWDTRPSS[1:0] bits specify the window start position that indicates the refresh-permitted period. 100%, 75%, 50%, or 25% of the timeout period can be selected for the window start position. Set the window start position to a value greater than the window end position. If the window start position is set to a value less than or equal to the window end position, the window start position setting is enabled and the window end position is set to 0%.

Table 24.3 lists the counter values for the window start and end positions, and Figure 24.2 shows the refresh-permitted period set in the IWDTRPSS[1:0], IWDTRPES[1:0], and IWDTTOPS[1:0] bits.

Table 24.3 Relationship between the timeout period and window start and end counter values

IWDTTOPS[1:0] bits		Timeout period		Window start and end counter value			
b3	b2	Cycles	Counter value	100%	75%	50%	25%
0	0	128	0x007F	0x007F	0x005F	0x003F	0x001F
0	1	512	0x01FF	0x01FF	0x017F	0x00FF	0x007F
1	0	1024	0x03FF	0x03FF	0x02FF	0x01FF	0x00FF
1	1	2048	0x07FF	0x07FF	0x05FF	0x03FF	0x01FF

IWDTRPSS[1:0] bits		IWDTRPES[1:0] bits		Window	
b11	b10	b9	b8	Start (%)	End (%)
1	1	1	1	100	0
		1	0		25
		0	1		50
		0	0		75
1	0	1	1	75	0
		1	0		25
		0	1		50
		0	0		75
0	1	1	1	50	0
		1	0		25
		0	1		50
		0	0		75
0	0	1	1	25	0
		1	0		25
		0	1		50
		0	0		75

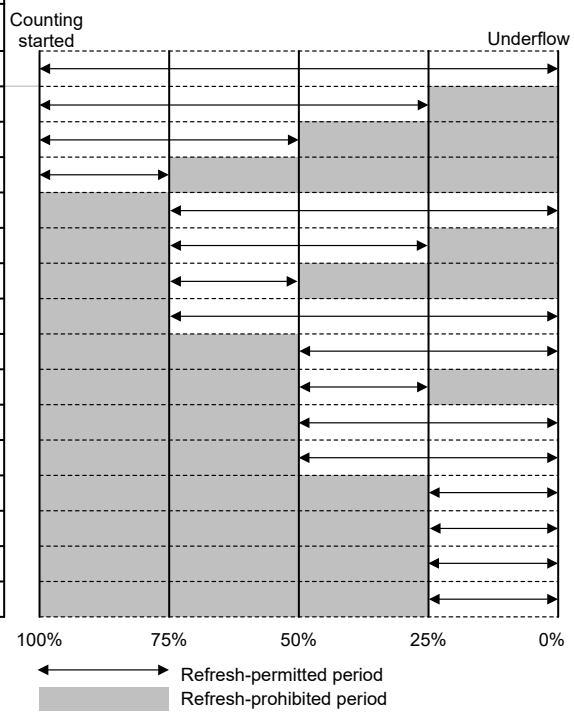

Note: If window end position setting ≥ window start position setting, the window end position setting is set to 0%.

Figure 24.2 IWDTRPSS[1:0] and IWDTRPES[1:0] bit settings and refresh-permitted period

IWDTRSTIRQS bit (IWDT Reset Interrupt Request Select)

The IWDTRSTIRQS bit specifies the behavior when an underflow or a refresh error occurs. Setting 1 selects reset output. Setting 0 selects interrupt.

IWDTSTPCTL bit (IWDT Stop Control)

The IWDTSTPCTL bit selects whether to stop counting on transition to Sleep, Snooze, or Software Standby mode.

24.3 Operation

24.3.1 Auto Start Mode

When the IWDT Start Mode Select bit (OFS0.IWDTSTRT) in the Option Function Select Register 0 is 0, auto start mode is selected, otherwise the IWDT is disabled.

Within the reset state, the setting values for the following in the Option Function Select Register 0 (OFS0) are set in the IWDT registers:

- Clock division ratio (OFS0.IWDTCKS[3:0])
- Window start and end positions (OFS0.IWDTRPSS[1:0], OFS0.IWDTRPES[1:0])
- Timeout period (OFS0.IWDTTOPS[1:0])
- Reset output or interrupt request (OFS0.IWDTRSTIRQS)

When the reset state is released, the counter automatically starts counting down from the value selected in the IWDT Timeout Period Select bits (OFS0.IWDTTOPS[1:0]).

After that, as long as the program continues normal operation and the counter is refreshed within the refresh-permitted period, the value in the counter is reset each time the counter is refreshed and down-counting continues. The IWDT does not output the reset signal as long as this procedure continues. However, if the counter underflows because the program crashed or because a refresh error occurred when an attempt is made to refresh outside the refresh-permitted period, the IWDT asserts the reset signal or non-maskable interrupt request/interrupt request (IWDT_NMIUNDF).

After the reset signal or non-maskable interrupt request/interrupt request is generated, the counter reloads the timeout period after counting for 1 cycle, the value of the timeout period is set in the down-counter and counting starts. The reset output or interrupt request output can be selected with the IWDT Reset Interrupt Request Select bit (OFS0.IWDTRSTIRQS).
The interrupt enabled for operating the NMI can be selected with the IWDT Underflow/Refresh Error Interrupt Enable bit (NMIER.IWDTEN).

Figure 24.3 shows an example of operation under the following conditions:

- Auto start mode (OFS0.IWDTSTRT = 0)
- IWDT behavior selection: interrupt (OFS0.IWDTRSTIRQS = 0)
- Non-maskable Interrupt: IWDT Underflow/Refresh Error Interrupt Enabled (NMIER.IWDTEN = 1)
- The window start position is 75% (OFS0.IWDTRPSS[1:0] = 10b)
- The window end position is 25% (OFS0.IWDTRPES[1:0] = 10b).

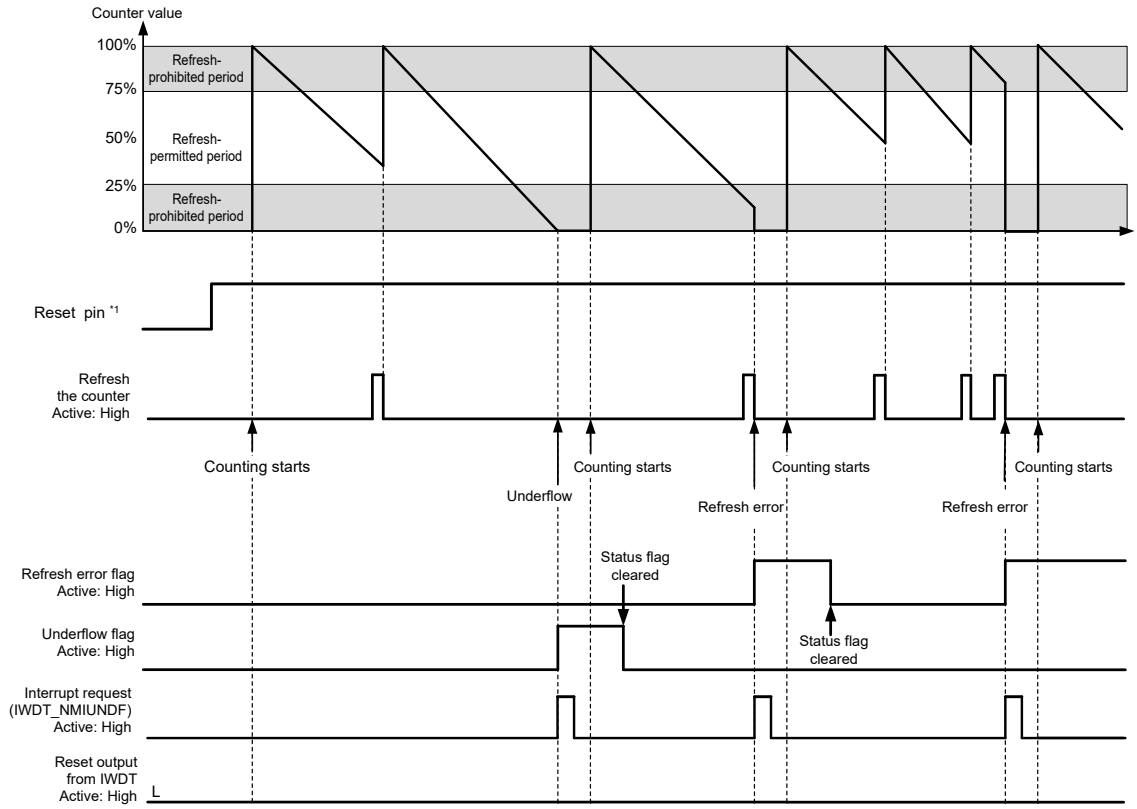

Note 1. Reset pin = RES

Figure 24.3 Operation example in auto start mode

24.3.2 Refresh Operation

To refresh the down counter and start the counting operation, write to the IWDT Refresh Register (IWDTRR) in the order of values from 0x00 to 0xFF. If a value other than 0xFF is written after 0x00, the down-counter is not refreshed. If an invalid value is written, refreshing is performed normally by writing to the IWDTRR register in the order of values from 0x00 to 0xFF.

When writes are made in the order of 0x00 (first time) → 0x00 (second time), and if 0xFF is written after that, the writing order 0x00 → 0xFF is satisfied. Writing 0x00 ((n - 1)th time) →0x00 (nth time) → 0xFF is valid, and the refresh is performed correctly. Even when the first value written before 0x00 is not 0x00, correct refreshing is performed as long as the operation contains the write sequence of 0x00 → 0xFF.

Correct refreshing is also performed regardless of whether a register other than IWDTRR is accessed or IWDTRR is read between writing 0x00 and writing 0xFF to IWDTRR. Writes to refresh the counter must be made within the refresh-permitted period. Whether writing is done within the refresh-permitted period is determined when 0xFF is written. For this reason, correct refreshing is performed even when 0x00 is written outside the refresh-permitted period.

[Example write sequences that are valid to refresh the counter]

- 0x00 → 0xFF
- 0x00 ((n - 1)th time) → 0x00 (nth time) → 0xFF
- 0x00 → access to another register or read from IWDTRR → 0xFF.

[Example write sequences that are not valid to refresh the counter]

- 0x23 (a value other than 0x00) → 0xFF

- 0x00 → 0x54 (a value other than 0xFF)
- 0x00 → 0xAA (0x00 and a value other than 0xFF) → 0xFF.

After 0xFF is written to the IWDTRR register, refreshing the counter requires up to 4 cycles of the signal for counting (the IWDT-Dedicated Clock Frequency Division Ratio Select bits (OFS0.IWDTCKS[3:0]) to determine how many cycles of the IWDT-dedicated clock (IWDTCLK) make up 1 cycle for counting. To meet this requirement, writing 0xFF to the IWDTRR must be completed 4 count cycles before the end of the refresh-permitted period or a down-counter underflow. The value of the counter can be checked with the counter bits (IWDTSR.CNTVAL[13:0]).

[Example refreshing timings]

- When the window start position is set to 0x1FFF, even if 0x00 is written to IWDTRR before 0x1FFF is reached at (0x2002, for example), refreshing occurs if 0xFF is written to IWDTRR after the value of the IWDTSR.CNTVAL[13:0] bits reaches 0x1FFF
- When the window end position is set to 0x1FFF, refreshing occurs if 0x2003 (4 count cycles before 0x1FFF) or a greater value is read from the IWDTSR.CNTVAL[13:0] bits immediately after writing 0x00 → 0xFF to IWDTRR
- When the refresh-permitted period continues until count 0x0000, refreshing can be performed immediately before an underflow. In this case, if 0x0003 (4 count cycles before an underflow) or a greater value is read from the IWDTSR.CNTVAL[13:0] bits immediately after writing 0x00 → 0xFF to IWDTRR, no underflow occurs and refreshing is performed.

Figure 24.4 shows the IWDT refresh-operation waveforms when PCLKB > IWDTCLK and the clock division ratio is IWDTCLK.

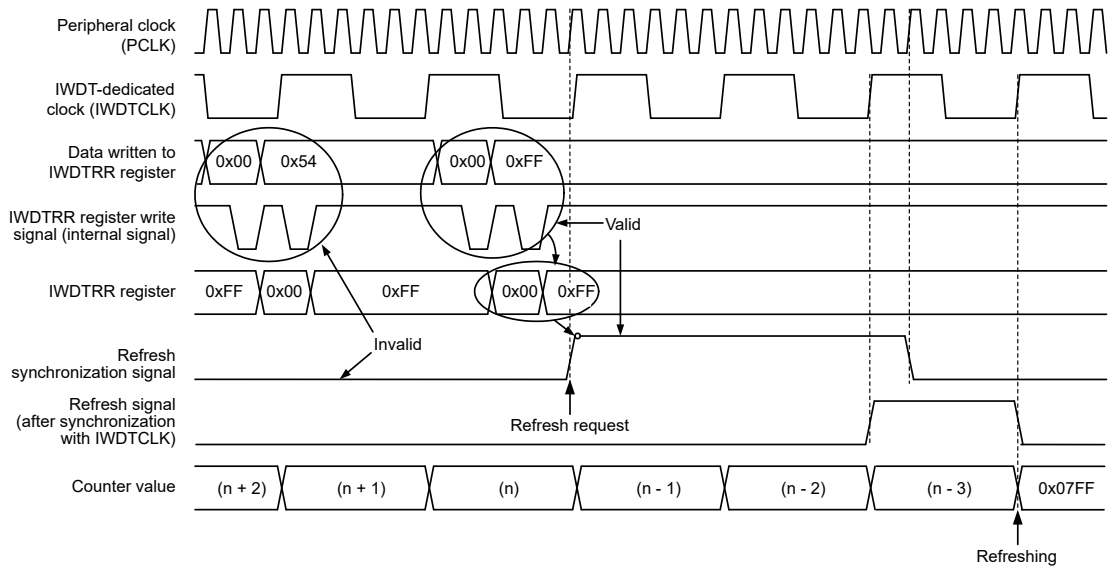

Note: PCLK = PCLKB

Figure 24.4 IWDT refresh operation waveforms when OFS0.IWDTCKS[3:0] = 0000b, OFS0.IWDTTOPS[1:0] = 11b

24.3.3 Status Flags

The refresh error (IWDTSR.REFEF) and underflow (IWDTSR.UNDFF) flags retain the source of the interrupt request from the IWDT. Therefore, after a release from the interrupt request generation, read the IWDTSR.REFEF and UNDFF flags to check for the interrupt source. For each flag, writing 0 clears the bit and writing 1 has no effect.

Leaving the status flags unchanged does not affect operation. If the flags are not cleared at the time of the next interrupt request from the IWDT, the earlier interrupt source is cleared and the new interrupt source is written. For the time period between when 0 is written in each flag and when its value is reflected, see section 24.2.2. IWDTSR : IWDT Status Register.

24.3.4 Reset Output

When the IWDT Reset Interrupt Request Select bit (OFS0.IWDTRSTIRQS) in the Option Function Select Register 0 (OFS0) is set to 1, a reset signal is output when an underflow in the counter or a refresh error occurs. Counting down automatically starts after the reset output.

24.3.5 Interrupt Sources

When the IWDT Reset Interrupt Request Select bit (OFS0.IWDTRSTIRQS) in the Option Function Select Register 0 (OFS0) is set to 0, an interrupt (IWDT_NMIUNDF) signal occurs when an underflow in the counter or a refresh error occurs. This interrupt can be used as a non-maskable interrupt or an interrupt. For details, see section 12, Interrupt Controller Unit (ICU).

Table 24.4 IWDT interrupt source

Name	Interrupt source	Interrupt to CPU	Start DMAC or DTC
IWDT_NMIUNDF	• Down-counter underflow • Refresh error	Possible	Not possible

24.3.6 Reading the Down-Counter Value

As the counter is a IWDT-dedicated clock (IWDTCLK), the counter value cannot be read directly. The IWDT synchronizes the counter value with the peripheral clock (PCLKB) and stores it in the down-counter value bits (IWDTSR.CNTVAL[13:0]) of the IWDT Status Register. Check these bits to obtain the counter value indirectly.

Reading the counter value requires multiple PCLKB clock cycles (up to 4 clock cycles), and the read counter value might differ from the actual counter value by a value of one count.

Figure 24.5 shows the processing for reading the IWDT counter value when PCLKB > IWDTCLK and the clock division ratio is IWDTCLK.

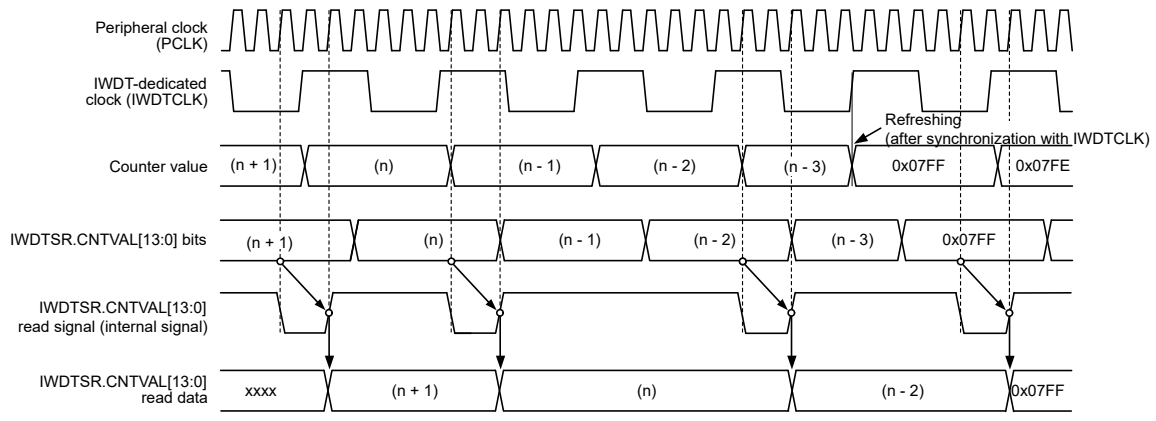

Note: PCLK = PCLKB

Figure 24.5 Processing for reading IWDT counter value when OFS0.IWDTCKS[3:0] = 0000b, OFS0.IWDTTOPS[1:0] = 11b

24.4 Output to the Event Link Controller (ELC)

The IWDT is capable of link operation for a specified module when the interrupt request signal is used as an event signal by the event link controller (ELC). The event signal is output by the counter underflow or refresh error.

An event signal is output regardless of the setting of the OFS0.IWDTRSTIRQS bit. An event signal can also be output at generation of the next interrupt source while the Refresh Error flag (IWDTSR.REFEF) or Underflow flag (IWDTSR.UNDFF) is 1. For details, see section 17, Event Link Controller (ELC).

24.5 Usage Notes

24.5.1 Refresh Operations

While configuring the refresh time, consider variations in the range of errors given the accuracy of PCLKB and IWDTCLK. Set values that ensure refreshing is possible.

24.5.2 Clock Division Ratio Setting

Satisfy the frequency of the peripheral module clock (PCLKB) ≥ 4 × (the frequency of the count clock source after division).

24.5.3 Constraints on the ICU Event Link Setting Register n (IELSRn) Setting

Setting 0x52 to ICU Event Link Setting Register n (IELSRn.IELS[8:0]) is prohibited when enabling the IWDT reset assertion (OFS0.IWDTRSTIRQS = 0) or when enabling event link operation (ELSRn.ELS[8:0] = 0x52).

25. Serial Communications Interface (SCI)

25.1 Overview

The Serial Communications Interface (SCI) × 6 channels have asynchronous and synchronous serial interfaces:

- Asynchronous interfaces (UART and Asynchronous Communications Interface Adapter (ACIA))
- 8-bit clock synchronous interface
- Simple IIC (master-only)
- Simple SPI
- Smart card interface
- Manchester interface
- Simple LIN

The smart card interface complies with the ISO/IEC 7816-3 standard for electronic signals and transmission protocol. SCIn (n = 0, 3 to 5, 9) has FIFO buffers to enable continuous and full-duplex communication, and the data transfer speed can be configured independently using an on-chip baud rate generator.

In this section, PCLK refers to PCLKA.

Table 25.1 lists the SCI specifications, Figure 25.1 shows a block diagram of SCI, and Table 25.3 lists the I/O pins.

Table 25.1 SCI specifications (1 of 4)

Parameter		Specifications
Number of modules		6 (SCIn (n = 0, 1, 3 to 5, 9))
Serial communication modes		• Asynchronous • Clock synchronous • Simple IIC • Simple SPI • Smart card interface • Manchester interface (SCIn (n = 3, 4)) • Simple LIN (SCIn (n = 1))
Transfer speed		Bit rate specifiable with the on-chip baud rate generator
Full-duplex communications		• Transmitter: Continuous transmission possible using double-buffering • Receiver: Continuous reception possible using double-buffering
Data transfer		Selectable as LSB-first or MSB-first transfer
Inverter for communication terminals (RXDn, TXDn)		Selectable inverter for each terminals (RXDn, TXDn) (SCIn (n = 0, 1, 3 to 5, 9))
Interrupt sources		• Transmit end, transmit data empty, receive data full, and receive error. • Receive data ready and address match (support by all channels except SCI1) • Completion of generation of a start condition, restart condition, or stop condition for simple IIC mode.
Module-stop function		Module-stop state can be set for each channel
Snooze end request		SCI0 address mismatch (SCI0_DCUF)
Clock synchronous mode	Data length	8 bits
	Receive error detection	Overrun error
	Clock source	Selectable to internal clock (master mode) or external clock (slave mode)
	Hardware flow control	Transmission and reception controllable with CTSn_RTSn pins
	Transmission and reception	Selectable to 1-stage register or 16-stage FIFO (only SCIn (n = 0, 3 to 5, 9) supports FIFO)

Table 25.1 SCI specifications (2 of 4)

Parameter		Specifications
Asynchronous mode	Data length	7, 8, or 9 bits
	Transmission stop bit	1 or 2 bits
	Adjustment of receive sampling timing	Adjustable receive sampling timing before/after the default timing
	Adjustment of transmit timing	Adjustable edge timing of transmit waveform controlled by the setting value of registers.
	Parity	Even parity, odd parity, or no parity
	Receive error detection	● Parity error ● Overrun error ● Framing error
	Hardware flow control	Transmission and reception controllable with CTSn_RTSn pins
	Transmission and reception	Selectable to 1-stage register or 16-stage FIFO (SCIn (n = 0, 3 to 5, 9) supports FIFO)
	Address match	Interrupt request/event output can be issued upon detecting a match between received data and the value in the compare match register (SCIn (n = 0, 3 to 5, 9) support)
	Address mismatch (SCI0 only) receive data	Snooze end request can be issued when detecting a mismatch between the received data and the value in the compare match register
	Start-bit detection	Selectable to low level or falling edge detection
	Break detection	Breaks from framing errors detectable by read from SPTR register
	Clock source	Selectable to internal or external clock. Transfer rate clock input from the GPT can be used. (SCIn (n = 1)).
	Double-speed mode	Baud rate generator double-speed mode is selectable
	Multi-processor communications function	Serial communication enabled among multiple processors
	Noise cancellation	Digital noise filters included on signal paths from the RXDn pin inputs
Smart card interface mode	Error processing	Error signal can be automatically transmitted upon detecting a parity error during reception
		Data can be automatically retransmitted upon receiving an error signal during transmission
	Data type	Both direct and inverse convention supported

Table 25.1 SCI specifications (3 of 4)

Parameter		Specifications
Manchester mode	Communication format	Manchester code with the preface and the Start Bit added
	Data length	7, 8, or 9 bits
	Transmission stop bit	1 or 2 bits
	Parity function	Even parity, odd parity, or no parity
	Receive error detection	Parity, overrun, framing, Manchester errors
	Hardware flow control	CTSn and RTSn pins can be used in controlling transmission
	Clock source	Only internal clock can be used.
	Double-speed mode	Baud rate generator double-speed mode is selectable
	Multi-processor communication function	Serial communication among multiple processors
	Noise cancellation	The signal paths from input on the RXDn pins incorporate digital noise filters
	Preface setting/detection function	The function outputs the configured the preface pattern and detects it.
	Start Bit setting/detection function	The function outputs the configured the Start Bit pattern and detects it.
	Reception retiming function	Timing correction is performed for each bit of the received signal
Simple IIC mode	Transfer format	I^2C bus format (MSB-first only)
	Operating mode	Master (single-master operation only)
	Transfer rate	Up to 400 kbps
	Noise cancellation	The signal paths from input on the SCLn and SDAn pins incorporate digital noise filters and provide an adjustable interval for noise cancellation
Simple SPI mode	Data length	8 bits
	Error detection	Overrun error
	Clock source	Selectable to internal clock (master mode) or external clock (slave mode)
	SSn input pin function	High impedance state can be invoked on the output pins by driving the SSn pin high.
	Clock settings	Configurable among four clock phase and clock polarity settings
Simple LIN mode	Start Frame transmission	• Output of a low level as the Break Field over a specified width and generation of interrupts on completion • Detection of bus collisions and the generation of interrupts on detection
	Start Frame reception	• Detection of the Break Field low width and generation of an interrupt on detection • Comparison of Control Fields 0 and 1 and generation of an interrupt when the two match • Two kinds of data for comparison (primary and secondary) can be set in Control Field 1. • A priority interrupt bit can be set in Control Field 1. • Handling of Start Frames that do not include a Break Field • Handling of Start Frames that do not include a Control Field 0 • Function for measuring bit rates
	I/O control function	• Selectable polarity for TXDXn and RXDXn signals • Selection of a digital filter for the RXDXn signal • Half-duplex operation employing RXDXn and TXDXn signals multiplexed on the same pin • Selectable timing for the sampling of data received through RXDXn • Signals received on RXDXn can be passed though to SCIn (n = 1) when the Simple LIN mode control section is off.
	Timer function	• Usable as a reloading timer
Bit rate modulation function		Error reduction through correction of outputs from the on-chip baud rate generator

Table 25.1 SCI specifications (4 of 4)

Parameter	Specifications
Event link function	Error event output for receive error or error signal detection (SCIn_ERI) (n = 0, 1, 3 to 5, 9)
	Receive data full event output (SCIn_RXI) (n = 0, 1, 3 to 5, 9)
	Transmit data empty event output (SCIn_TXI) (n = 0, 1, 3 to 5, 9)
	Address match event output (SCIn_AM) (n = 0, 3 to 5, 9)
	Transmit end event output (SCIn_TEI) (n = 0, 1, 3 to 5, 9)
Other function	TXD output mask function using AGT output (AGTOA0) (SCI5)
TrustZone Filter	Security attribution can be set for each channels

Table 25.2 Functions of SCI Channel

Item	SCI0, SCI5, SCI9	SCI3, SCI4	SCI1
Asynchronous mode	Available	Available	Available
Clock synchronous mode	Available	Available	Available
Smart card interface mode	Available	Available	Available
Simple I2C mode	Available	Available	Available
Simple SPI mode	Available	Available	Available
FIFO mode	Available	Available	Not Available
Address match	Available	Available	Not Available
Manchester mode	Not Available	Available	Not Available
Simple LIN mode	Not Available	Not Available	Available
GPT clock input	Not Available	Not Available	Available

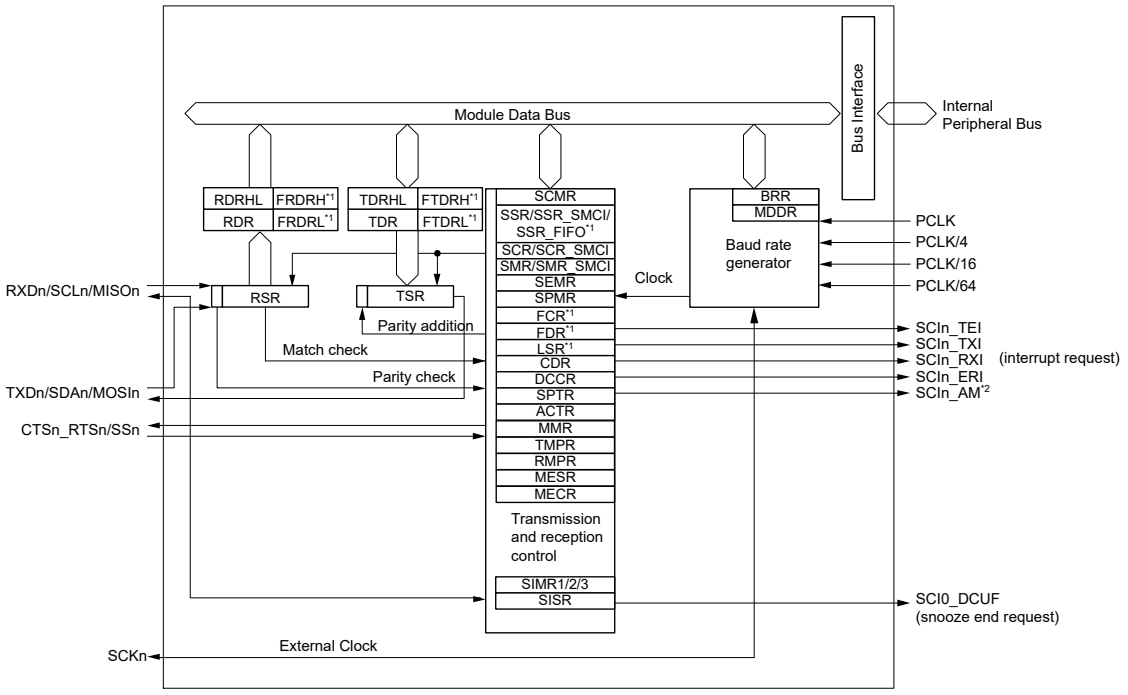

Note: n = 0, 1, 3 to 5, 9
Note 1. SCIn (n = 0, 3 to 5, 9) only
Note 2. n = 0, 3 to 5, 9

Figure 25.1 SCI block diagram

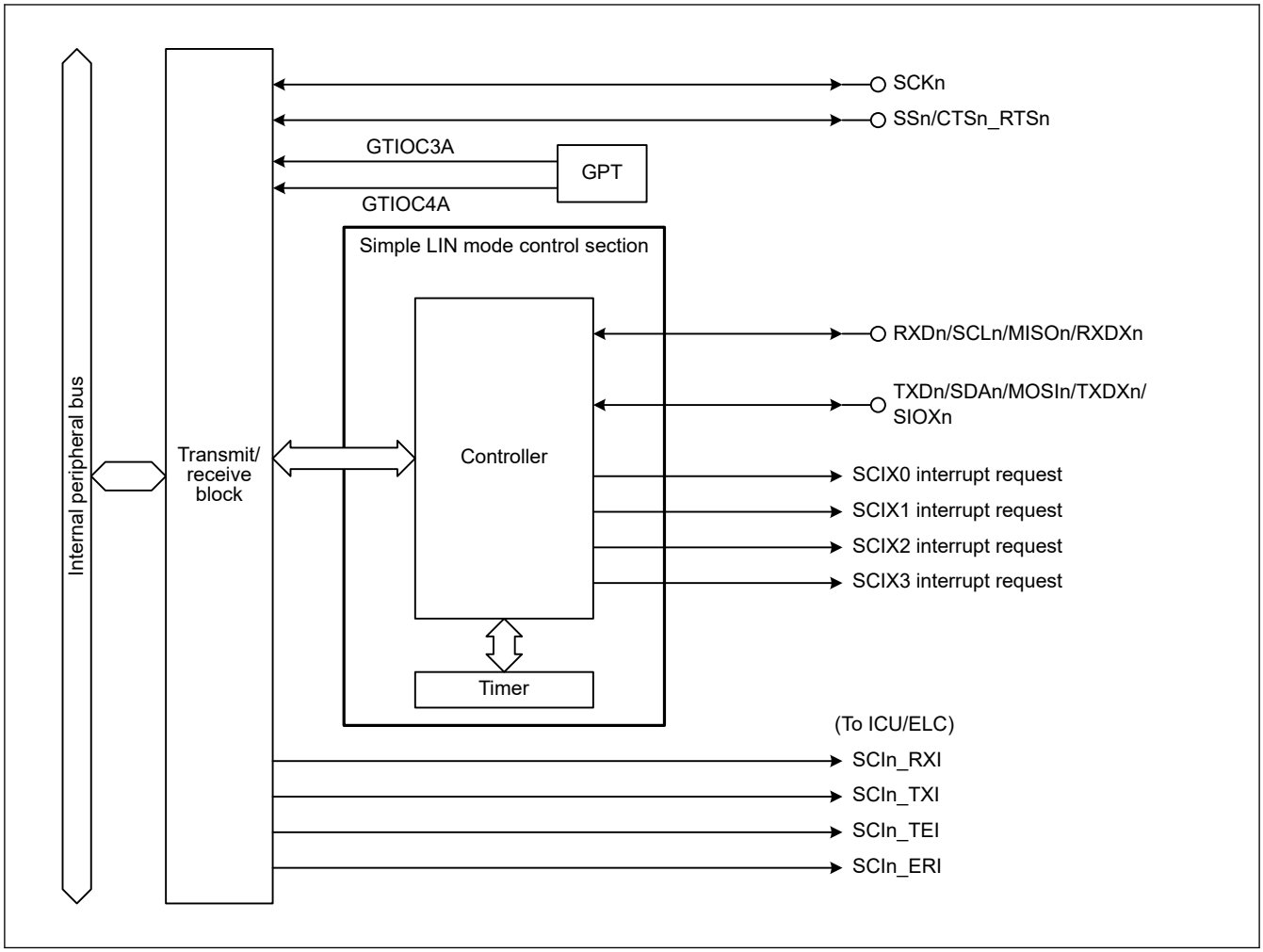

Figure 25.2 SCIn (n = 1) Simple LIN mode controller block diagram

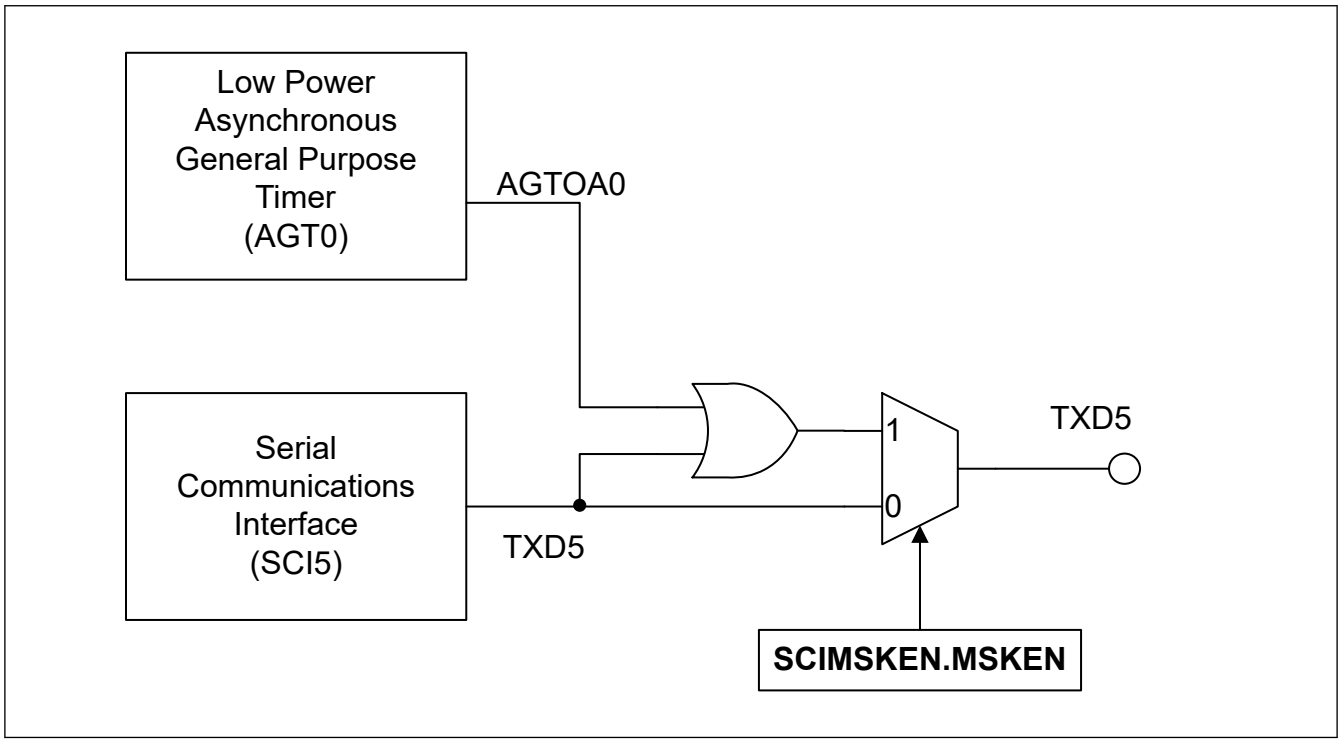

Figure 25.3 SCI5 TXD output mask function block diagram

Table 25.3 SCI I/O pins

Function	Pin name	Input/ Output	Description
SCIn (n = 0, 1, 3 to 5, 9)	RXDn/SCLn/MISOn	Input/ Output	SCIn receive data input SCIn I^2C clock input/output SCIn slave transmit data input/output
	TXDn/SDAn/MOSIn	Input/ Output	SCIn transmit data output SCIn I^2C data input/output SCIn master transmit data input/output
	SSn/CTSn_RTSn	Input/ Output	SCIn chip select input, active-low SCIn transfer start control input/output, active-low
	CTSn (n = 0, 3 to 5, 9)	Input	SCIn transfer start control input, active-low
	RXDXn (n = 1)	Input/ Output	SCIn receive data input (Simple LIN Mode)
	TXDXn/SIOXn (n = 1)	Input/ Output	SCIn transmit data output (Simple LIN Mode) SCIn transmit data input/output (Simple LIN Mode)
	SCKn	Input/ Output	SCIn clock input/output

25.2 Register Descriptions

25.2.1 RSR : Receive Shift Register

RSR is a shift register that receives serial data input from the RXDn pin and converts it into parallel data. When one frame of data is received, the data is automatically transferred to the RDR, RDRHL, or the receive FIFO register. The RSR register cannot be directly accessed by the CPU.

25.2.2 RDR : Receive Data Register

Base address: SCIn = 0x4011_8000 + 0x0100 × n (n = 0, 5, 9)
SCIk = 0x4011_8000 + 0x0100 × k (k = 3, 4)
SCI1 = 0x4011_8100

Offset address: 0x05

Bit position:	7	6	5	4	3	2	1	0
Bit field:								
Value after reset:	0	0	0	0	0	0	0	0

RDR is an 8-bit register that stores received data. When one frame of serial data is received, it is transferred from RSR to RDR, and the RSR register can receive more data. Because RSR and RDR function as a double buffer, continuous received operations can be performed.

Read the RDR only once after a receive data full interrupt (SCIn_RXI) occurs.

Note: If the next frame of data is received before reading the received data from RDR, an overrun error occurs. The CPU cannot write to the RDR.

25.2.3 RDRHL : Receive Data Register for Non-Manchester Mode (MMR.MANEN = 0)

Base address: SCIn = 0x4011_8000 + 0x0100 × n (n = 0, 5, 9)
SCIk = 0x4011_8000 + 0x0100 × k (k = 3, 4)
SCI1 = 0x4011_8100

Offset address: 0x10

Bit position:	15	14	13	12	11	10	9	8	7	6	5	4	3	2	1	0
Bit field:	—	—	—	—	—	—	—	RDAT[8:0]								
Value after reset:	0	0	0	0	0	0	0	0	0	0	0	0	0	0	0	0

Bit	Symbol	Function	R/W
8:0	RDAT[8:0]	Serial Receive Data	R
15:9	—	These bits are read as 0.	R

RDRHL is a 16-bit register that stores received data. Use this register when asynchronous mode and 9-bit data length are selected.

The lower 8 bits of RDRHL are the shadow register of RDR, so access to RDRHL affects the RDR register. Access to the RDRHL register is prohibited if 7-bit or 8-bit data length is selected.

After one frame of data is received, the received data is transferred from the RSR register to the RDR/RDRHL registers, allowing the RSR register to receive more data.

The RSR and RDRHL registers form a double-buffered structure to enable continuous reception. RDRHL should be read only when a receive data full interrupt (SCIn_RXI) request is issued. An overrun error occurs when the next frame of data is received before the received data is read from RDRHL. The CPU cannot write to the RDRHL register.

25.2.4 RDRHL_MAN : Receive Data Register for Manchester Mode (MMR.MANEN = 1)

Base address: SCIk = 0x4011_8000 + 0x0100 × k (k = 3, 4)

Offset address: 0x10

Bit position:	15	14	13	12	11	10	9	8	7	6	5	4	3	2	1	0
Bit field:	—	—	—	RSYNC	—	—	MPB	RDAT[8:0]								
Value after reset:	0	0	0	0	0	0	0	0	0	0	0	0	0	0	0	0

Bit	Symbol	Function	R/W
8:0	RDAT[8:0]	Serial Receive Data These bits can read serial receive data	R
9	MPB	Multi-processor Bit This bit can read multi-processor bit corresponded to serial receive data (RDATA[8:0]) 0: Data transmission cycles 1: ID transmission cycles	R
11:10	—	These bits are read as 0. The write value should be 0.	R
12	RSYNC	Receive SYNC Data Bit This bit is valid when MMR.SBSEL = 1 in Manchester mode, 0 is read otherwise. 0: The received Start bit is DATA SYNC 1: The received Start bit is COMMAND SYNC	R
15:13	—	These bits are read as 0. The write value should be 0.	R

RDRHL_MAN is a 16-bit register that stores received data. Use this register when asynchronous mode and 9-bit data length are selected. The lower 8 bits of RDRHL_MAN are the shadow register of RDR, so access to RDRHL_MAN affects the RDR register. Access to the RDRHL_MAN register is prohibited if 7-bit or 8-bit data length is selected.

After one frame of data is received, the received data is transferred from the RSR register to the RDR/RDRHL_MAN registers, allowing the RSR register to receive more data.

The RSR and RDRHL_MAN registers form a double-buffered structure to enable continuous reception.

RDRHL_MAN should be read only when a receive data full interrupt (SCIn_RXI) request is issued. An overrun error occurs when the next frame of data is received before the received data is read from RDRHL_MAN.

The CPU cannot write to the RDRHL_MAN register.

RDAT[8:0] bits (Serial Receive Data)

The RDAT[8:0] bits can read serial receive data.

MPB bit (Multi-processor Bit)

The MPB bit holds the value of the multi-processor bit in the reception frame. This bit does not change when the SCR.RE bit is 0.

RSYNC bit (Receive SYNC Data Bit)

When Manchester mode and MMR.SBSEL = 1, this bit indicates the type of SYNC of the received Start bit. For other settings, it is fixed to 0.

25.2.5 FRDRHL/FRDRH/FRDRL : Receive FIFO Data Register

Base address: SCIn = 0x4011_8000 + 0x0100 × n (n = 0, 5, 9)
SCIk = 0x4011_8000 + 0x0100 × k (k = 3, 4)

Offset address: 0x10 (FRDRHL/FRDRH)
0x11 (FRDRL)

Bit position:	15	14	13	12	11	10	9	8	7	6	5	4	3	2	1	0
Bit field:	—	RDF	ORER	FER	PER	DR	MPB	RDAT[8:0]								
Value after reset:	0	0	0	0	0	0	0	0	0	0	0	0	0	0	0	0

Bit	Symbol	Function	R/W
8:0	RDAT[8:0]	Serial receive data Stores the serial receive data. Valid only in asynchronous mode, including multi-processor mode, and clock synchronous mode, and with FIFO selected.	R
9	MPB	Multi-Processor Bit Flag Stores the value of the multi-processor bit in the serial receive data, RDAT[8:0]. Valid only in asynchronous mode with SMR.MP = 1, and with FIFO selected. 0: Data transmission cycle 1: ID transmission cycle	R
10	DR	Receive Data Ready Flag This flag is the same as SSR_FIFO.DR. 0: Receiving is in progress, or no received data remains in the FRDRH and FRDRL registers after successfully completed reception 1: Next receive data is not received for a period after successfully completed reception	R*1
11	PER	Parity Error Flag 0: No parity error occurred in the first data of FRDRH and FRDRL 1: Parity error occurred in the first data of FRDRH and FRDRL	R
12	FER	Framing Error Flag 0: No framing error occurred in the first data of FRDRH and FRDRL 1: Framing error occurred in the first data of FRDRH and FRDRL	R
13	ORER	Overrun Error Flag This flag is the same as SSR_FIFO.ORER. 0: No overrun error occurred 1: Overrun error occurred	R*1

Bit	Symbol	Function	R/W
14	RDF	Receive FIFO Data Full Flag This flag is the same as SSR_FIFO.RDF. 0: The amount of receive data written in FRDRH and FRDRL is less than the specified receive triggering number 1: The amount of receive data written in FRDRH and FRDRL is equal to or greater than the specified receive triggering number	R*1
15	—	This bit is read as 0.	R

Note 1. If this flag is read, it indicates the same value as that read from the SSR_FIFO register. Write 0 to the SSR_FIFO register to clear the flag.

FRDRHL is a 16-bit register that consists of the 8-bit FRDRH and FRDRL registers. FRDRH is assigned to the FRDRHL[15:8] bits, and allocated to the same address as FRDRHL. FRDRL is assigned to the FRDRHL[7:0] bits, and allocated to (the address of FRDRHL + 1) address.

FRDRH and FRDRL constitute a 16-stage FIFO register that stores serial receive data and related status information readable by software. This register is only valid in asynchronous mode, including multi-processor mode, or clock synchronous mode.

The SCI completes reception of one frame of serial data by transferring the received data from the Receive Shift Register (RSR) into FRDRH and FRDRL for storage. Continuous reception is executed until 16 stages are stored. If data is read when there is no received data in FRDRH and FRDRL, the value is undefined. When FRDRH and FRDRL are full, subsequent serial receive data is lost. The CPU can read from the FRDRH and FRDRL registers but cannot write to them.

Reading 1 from the RDF, ORER, or DR flags of the FRDRH register is the same as reading from those bits in the SSR_FIFO register. When writing 0 to clear a flag in the SSR_FIFO register after reading the FRDRH register, write 0 only to the flag that is to be cleared and write 1 to the other flags.

When reading both the FRDRH and FRDRL registers, read in order from FRDRH to FRDRL. The FRDRHL register can be accessed in 16-bit units.

25.2.6 TDR : Transmit Data Register

Base address: SCIn = 0x4011_8000 + 0x0100 × n (n = 0, 5, 9)
SCIk = 0x4011_8000 + 0x0100 × k (k = 3, 4)
SCI1 = 0x4011_8100

Offset address: 0x03

Bit position:	7	6	5	4	3	2	1	0
Bit field:								
Value after reset:	1	1	1	1	1	1	1	1

Bit	Symbol	Function	R/W
7:0	n/a	Serial Transmit Data	R/W

TDR is an 8-bit register that stores transmit data.

When the SCI detects that the TSR register is empty, it transfers the transmit data written in the TDR register to the TSR register and starts transmission.

The double-buffered structure of the TDR and TSR registers enables continuous serial transmission. If the next transmit data is already written to TDR when one frame of data is transmitted, the SCI transfers the written data to the TSR register to continue transmission.

The CPU can read from or write to TDR at any time. Only write transmit data to TDR once after each instance of the transmit data empty interrupt (SCIn_TXI).

25.2.7 TDRHL : Transmit Data Register for Non-Manchester Mode (MMR.MANEN = 0)

Base address: SCIn = 0x4011_8000 + 0x0100 × n (n = 0, 5, 9)
SCIk = 0x4011_8000 + 0x0100 × k (k = 3, 4)
SCI1 = 0x4011_8100

Offset address: 0x0E

Bit position:	15	14	13	12	11	10	9	8	7	6	5	4	3	2	1	0
Bit field:	—	—	—	—	—	—	—	TDAT[8:0]								
Value after reset:	1	1	1	1	1	1	1	1	1	1	1	1	1	1	1	1

Bit	Symbol	Function	R/W
8:0	TDAT[8:0]	Serial Transmit Data	R/W
15:9	—	This bit is read as 1. The write value should be 1.	R/W

TDRHL is a 16-bit register that stores transmit data. Use this register when asynchronous mode and 9-bit data length are selected.

The lower 8 bits of TDRHL are the shadow register of TDR, so access to TDRHL affects the TDR register. Access to the TDRHL register is prohibited if 7-bit or 8-bit data length is selected.

When empty space is detected in the TSR register, the transmit data stored in the TDRHL registers is transferred to TSR and transmission starts.

The TSR and TDRHL registers have a double-buffered structure to support continuous transmission. When the next data to be transmitted is stored in TDRHL after one frame of data is transmitted, the transmitting operation continues by transferring the data to the TSR register.

The CPU can read and write to the TDRHL register. Bits [15:9] in TDRHL are fixed to 1. These bits are read as 1. The write value should be 1.

Write transmit data to the TDRHL register only once when a transmit data empty interrupt (SCIn_TXI) request is issued.

25.2.8 TDRHL_MAN : Transmit Data Register for Manchester Mode (MMR.MANEN = 1)

Base address: SCIk = 0x4011_8000 + 0x0100 × k (k = 3, 4)

Offset address: 0x0E

Bit position:	15	14	13	12	11	10	9	8	7	6	5	4	3	2	1	0
Bit field:	—	—	—	TSYNC	—	—	MPBT	TDAT[8:0]								
Value after reset:	1	1	1	1	1	1	1	1	1	1	1	1	1	1	1	1

Bit	Symbol	Function	R/W
8:0	TDAT[8:0]	Serial Transmit Data These bits can set serial transmit data	R/W
9	MPBT	Multi-processor Transfer Bit Flag Value of the multi-processor bit in the transmission frame 0: Data transmission cycles 1: ID transmission cycles	R/W
11:10	—	The write value should be 1.	R
12	TSYNC	Transmit SYNC data bit This bit is valid when MMR.SBSEL = 1 and MMR.SYNSEL = 1 in Manchester mode. 0: The Start bit is transmitted as DATA SYNC 1: The Start bit is transmitted as COMMAND SYNC	R/W
15:13	—	The write value should be 1.	R

TDRHL_MAN is a 16-bit register that stores transmit data. Use this register when asynchronous mode and 9-bit data length are selected.

The lower 8 bits of TDRHL_MAN are the shadow register of TDR, so access to TDRHL_MAN affects the TDR register. Access to the TDRHL_MAN register is prohibited if 7-bit or 8-bit data length is selected.

When empty space is detected in the TSR register, the transmit data stored in the TDRHL_MAN registers is transferred to TSR and transmission starts.

The TSR and TDRHL_MAN registers have a double-buffered structure to support continuous transmission. When the next data to be transmitted is stored in TDRHL_MAN after one frame of data is transmitted, the transmitting operation continues by transferring the data to the TSR register.

Write transmit data to the TDRHL_MAN register only once when a transmit data empty interrupt (SCIn_TXI) request is issued.

TDAT[8:0] bits (Serial Transmit Data)

The TDAT[8:0] bits set the serial transmission data.

MPBT bit (Multi-processor Transfer Bit Flag)

The MPBT bit selects the multi processor bit of transmit frame.

TSYNC bit (Transmit SYNC data bit)

When Manchester mode and MMR.SBSEL = 1 and MMR.SYNSEL = 1, the type of SYNC selected according to this bit becomes the Star bit of the transmission frame.

25.2.9 FTDRHL/FTDRH/FTDRL : Transmit FIFO Data Register

Base address: SCIn = 0x4011_8000 + 0x0100 × n (n = 0, 5, 9)
SCIk = 0x4011_8000 + 0x0100 × k (k = 3, 4)

Offset address: 0x0E (FTDRHL/FTDRH)
0x0F (FTDRL)

Bit position:	15	14	13	12	11	10	9	8	7	6	5	4	3	2	1	0
Bit field:	—	—	—	—	—	—	MPBT	TDAT[8:0]								
Value after reset:	1	1	1	1	1	1	1	1	1	1	1	1	1	1	1	1

Bit	Symbol	Function	R/W
8:0	TDAT[8:0]	Serial Transmit Data Specifies the serial transmit data. Valid only in asynchronous mode, including multi-processor mode, and clock synchronous mode, and with FIFO selected.	W
9	MPBT	Multi-Processor Transfer Bit Flag Specifies the multi-processor bit in the transmission frame. Valid only in asynchronous mode and SMR.MP = 1, and with FIFO selected. Valid only in asynchronous mode, including multi-processor mode, and clock synchronous mode, and with FIFO selected. 0: Data transmission cycle 1: ID transmission cycle	W
15:10	—	The write value should be 1.	W

FTDRHL is a 16-bit register that consists of the 8-bit FTDRH and FTDRL registers. FTDRH is assigned to the FTDRHL[15:8] bits, and allocated to the same address as FTDRHL. FTDRL is assigned to the FTDRHL[7:0] bits, and allocated to (the address of FTDRHL + 1) address.

FTDRH and FTDRL constitute a 16-stage FIFO register that stores data for serial transmission and a multi-processor transfer bit. This register is only valid in asynchronous mode, including multi-processor mode, or clock synchronous mode.

When the SCI detects that the Transmit Shift Register (TSR) is empty, it transfers data written in the FTDRH and FTDRL registers to the TSR register and starts serial transmission. Continuous serial transmission is executed until no transmit data is left in FTDRH and FTDRL. When FTDRHL is full of transmit data, no more data can be written. If writing new data is attempted, the data is ignored. The CPU can write to the FTDRH and FTDRL registers but cannot read them.

When writing to both the FTDRH and FTDRL registers, write in order from FTDRH to FTDRL.

TDAT[8:0] bits (Serial Transmit Data)

The TDAT[8:0] bits set the serial transmission data. This is valid only when FIFO is selected in asynchronous mode (including multiprocessor) or clock synchronous mode.

MPBT flag (Multi-Processor Transfer Bit Flag)

The MPBT flag specifies the value of the multi-processor bit of the transmit frame. When FCR.FM = 1, SSR.MPBT is invalid.

25.2.10 TSR : Transmit Shift Register

TSR is a shift register that transmits serial data. To perform serial data transmission, the SCI first automatically transfers transmit data from TDR, TDRHL, or transmit FIFO to TSR, then sends the data to the TXDn pin. The CPU cannot directly access the TSR.

25.2.11 SMR : Serial Mode Register for Non-Smart Card Interface Mode (SCMR.SMIF = 0)

Base address: SCIn = 0x4011_8000 + 0x0100 × n (n = 0, 5, 9)
SCIk = 0x4011_8000 + 0x0100 × k (k = 3, 4)
SCI1 = 0x4011_8100

Offset address: 0x00

Bit position:	7	6	5	4	3	2	1	0
Bit field:	CM	CHR	PE	PM	STOP	MP	CKS[1:0]	
Value after reset:	0	0	0	0	0	0	0	0

Bit	Symbol	Function	R/W
1:0	CKS[1:0]	Clock Select 0 0: PCLK clock (n = 0)*1 0 1: PCLK/4 clock (n = 1)*1 1 0: PCLK/16 clock (n = 2)*1 1 1: PCLK/64 clock (n = 3)*1	R/W*4
2	MP	Multi-Processor Mode Valid only in asynchronous mode. 0: Disable multi-processor communications function 1: Enable multi-processor communications function	R/W*4
3	STOP	Stop Bit Length Valid only in asynchronous mode. 0: 1 stop bit 1: 2 stop bits	R/W*4
4	PM	Parity Mode Valid only when the PE bit is 1. 0: Even parity 1: Odd parity	R/W*4
5	PE	Parity Enable Valid only in asynchronous mode. 0: When transmitting: Do not add parity bit When receiving: Do not check parity bit 1: When transmitting: Add parity bit When receiving: Check parity bit	R/W*4
6	CHR	Character Length Valid only in asynchronous mode.*2 Selects the transmit/receive character length in combination with the SCMR.CHR1 bit. 0: SCMR.CHR1 = 0: Transmit/receive in 9-bit data length SCMR.CHR1 = 1: Transmit/receive in 8-bit data length (initial value) 1: SCMR.CHR1 = 0: Transmit/receive in 9-bit data length SCMR.CHR1 = 1: Transmit/receive in 7-bit data length*3	R/W*4

Bit	Symbol	Function	R/W
7	CM	Communication Mode 0: Asynchronous mode or simple IIC mode 1: Clock synchronous mode or simple SPI mode	R/W*4

Note 1. n is the decimal notation of the value of n in the BRR register. See section 25.2.20. BRR : Bit Rate Register.
Note 2. In any mode other than asynchronous mode, this bit setting is invalid and a fixed data length of 8 bits is used.
Note 3. LSB-first is fixed and the MSB (bit [7]) in the TDR register is not transmitted in transmit mode.
Note 4. Writable only when SCR.TE = 0 and SCR.RE = 0 (both serial transmission and reception are disabled).

The SMR register sets the communication format and clock source for the on-chip baud rate generator.

CKS[1:0] bits (Clock Select)

The CKS[1:0] bits select the clock source for the on-chip baud rate generator. For the relationship between the settings of these bits and the baud rate, see section 25.2.20. BRR : Bit Rate Register.

MP bit (Multi-Processor Mode)

The MP bit disables or enables the multi-processor communications function. The PE and PM bit settings are invalid in multi-processor mode.

STOP bit (Stop Bit Length)

The STOP bit selects the stop bit length in transmission.

In reception, only the first stop bit is checked regardless of this bit setting. If the second stop bit is 0, it is treated as the start bit of the next transmit frame.

PM bit (Parity Mode)

The PM bit selects the parity mode (even or odd) for transmission and reception. The PM bit setting is invalid in multiprocessor mode.

PE bit (Parity Enable)

When the PE bit is set to 1, the parity bit is added to transmit data, and the parity bit is checked in reception. Regardless of the PE bit setting, the parity bit is not added or checked in multi-processor format.

CHR bit (Character Length)

The CHR bit selects the data length for transmission and reception in combination with the SCMR.CHR1 bit. In modes other than asynchronous, a fixed data length of 8 bits is used.

CM bit (Communication Mode)

The CM bit selects the communication mode:

- Asynchronous mode or simple IIC mode
- Clock synchronous mode or simple SPI mode

25.2.12 SMR_SMCI : Serial Mode Register for Smart Card Interface Mode (SCMR.SMIF = 1)

Base address: SCIn = 0x4011_8000 + 0x0100 × n (n = 0, 5, 9)
SCIk = 0x4011_8000 + 0x0100 × k (k = 3, 4)
SCI1 = 0x4011_8100

Offset address: 0x00

Bit position:	7	6	5	4	3	2	1	0
Bit field:	GM	BLK	PE	PM	BCP[1:0]		CKS[1:0]	
Value after reset:	0	0	0	0	0	0	0	0

Bit	Symbol	Function	R/W
1:0	CKS[1:0]	Clock Select 0 0: PCLK clock (n = 0)*1 0 1: PCLK/4 clock (n = 1)*1 1 0: PCLK/16 clock (n = 2)*1 1 1: PCLK/64 clock (n = 3)*1	R/W*2
3:2	BCP[1:0]	Base Clock Pulse Selects the number of base clock cycles in combination with the SCMR.BCP2 bit. Table 25.4 lists the combinations of the SCMR.BCP2 and SMR.BCP[1:0] bits.	R/W*2
4	PM	Parity Mode Valid only when the PE bit is 1. 0: Even parity 1: Odd parity	R/W*2
5	PE	Parity Enable When this bit is set to 1, a parity bit is added to transmit data, and the parity of received data is checked. Set this bit to 1 in smart card interface mode.	R/W*2
6	BLK	Block Transfer Mode 0: Normal mode operation 1: Block transfer mode operation	R/W*2
7	GM	GSM Mode 0: Normal mode operation 1: GSM mode operation	R/W*2

Note 1. n is the decimal notation of the value of n in the BRR register. See section 25.2.20. BRR : Bit Rate Register.
Note 2. Writable only when SCR_SMCI.TE = 0 and SCR_SMCI.RE = 0 (both serial transmission and reception are disabled).

The SMR_SMCI register sets the communication format and clock source for the on-chip baud rate generator.

CKS[1:0] bits (Clock Select)

The CKS[1:0] bits select the clock source for the on-chip baud rate generator. For the relationship between the settings of these bits and the baud rate, see section 25.2.20. BRR : Bit Rate Register.

BCP[1:0] bits (Base Clock Pulse)

The BCP[1:0] bits select the number of base clock cycles in a 1-bit data transfer time in smart card interface mode. Set these bits in combination with the SCMR.BCP2 bit.

For details, see section 25.7.4. Receive Data Sampling Timing and Reception Margin.

Table 25.4 Combinations of SCMR.BCP2 and SMR_SMCI.BCP[1:0] bits

SCMR.BCP2 bit	SMR_SMCI.BCP[1:0] bits	Number of base clock cycles for 1-bit transfer period*1
0	00b	93 clock cycles (S = 93)
0	01b	128 clock cycles (S = 128)
0	10b	186 clock cycles (S = 186)
0	11b	512 clock cycles (S = 512)
1	00b	32 clock cycles (S = 32) (initial value)
1	01b	64 clock cycles (S = 64)
1	10b	372 clock cycles (S = 372)
1	11b	256 clock cycles (S = 256)

Note 1. S is the value of S in BRR (see section 25.2.20. BRR : Bit Rate Register).

PM bit (Parity Mode)

The PM bit selects the parity mode for transmission and reception (even or odd). For details on the usage of this bit in smart card interface mode, see section 25.7.2. Data Format (Except in Block Transfer Mode).

PE bit (Parity Enable)

Set the PE bit to 1. The parity bit is added to transmit data before transmission, and the parity bit is checked in reception.

BLK bit (Block Transfer Mode)

Setting the BLK bit to 1 enables block transfer mode operation. For details, see section 25.7.3. Block Transfer Mode.

GM bit (GSM Mode)

Setting the GM bit to 1 enables GSM mode operation. In GSM mode, the SSR_SMCI.TEND flag set timing is moved forward to 11.0 etus (elementary time unit = 1-bit transfer time) from the start bit, and clock output control is added. For details, see section 25.7.6. Serial Data Transmission (Except in Block Transfer Mode) and section 25.7.8. Clock Output Control.

25.2.13 SCR : Serial Control Register for Non-Smart Card Interface Mode (SCMR.SMIF = 0)

Base address: SCIn = 0x4011_8000 + 0x0100 × n (n = 0, 5, 9)
SCIk = 0x4011_8000 + 0x0100 × k (k = 3, 4)
SCI1 = 0x4011_8100

Offset address: 0x02

Bit position:	7	6	5	4	3	2	1	0
Bit field:	TIE	RIE	TE	RE	MPIE	TEIE	CKE[1:0]	
Value after reset:	0	0	0	0	0	0	0	0

Bit	Symbol	Function	R/W
1:0	CKE[1:0]	Clock Enable 0 0: In asynchronous mode, the SCKn pin is available for use as an I/O port based on the I/O port settings. In clock synchronous mode, the SCKn pin functions as the clock output pin. 0 1: In asynchronous mode, a clock with the same frequency as the bit rate is output from the SCKn pin. In clock synchronous mode, the SCKn pin functions as the clock output pin. Others: In asynchronous mode, input a clock with a frequency 16 times the bit rate from the SCKn pin when the SEMR.ABCS bit is 0. Input a clock signal with a frequency eight times the bit rate when the SEMR.ABCS bit is 1. The SCKn pin is available for use as an I/O port based on the I/O port settings when the GPT clock*4 is used. In clock synchronous mode, the SCKn pin functions as the clock input pin.	R/W*1
2	TEIE	Transmit End Interrupt Enable 0: Disable SCIn_TEI interrupt requests 1: Enable SCIn_TEI interrupt requests	R/W
3	MPIE	Multi-Processor Interrupt Enable Valid in asynchronous mode when SMR.MP = 1. 0: Normal reception 1: When data with the multi-processor bit set to 0 is received, the data is not read, and setting the status flags RDRF, ORER, and FER in SSR to 1 and the status flags SYER, PFER, and SBER in MESR are disabled. When data with the multi-processor bit set to 1 is received, the MPIE bit is automatically set to 0, and normal reception is resumed.	R/W*3
4	RE	Receive Enable 0: Disable serial reception 1: Enable serial reception	R/W*2
5	TE	Transmit Enable 0: Disable serial transmission 1: Enable serial transmission	R/W*2
6	RIE	Receive Interrupt Enable 0: Disable SCIn_RXI and SCIn_ERI interrupt requests 1: Enable SCIn_RXI and SCIn_ERI interrupt requests	R/W
7	TIE	Transmit Interrupt Enable 0: Disable SCIn_TXI interrupt requests 1: Enable SCIn_TXI interrupt requests	R/W

Note 1. Writable only when TE = 0 and RE = 0.

Note 2. 1 can be written only when TE = 0 and RE = 0, when the SMR.CM bit is 1. After setting TE or RE to 1, only 0 can be written to TE and RE. When the SMR.CM bit is 0 and the SIMR1.IICM bit is 0, writing is enabled under any condition.
Note 3. When writing a new value to a bit other than the MPIE bit of this register in multi-processor mode (SMR.MP bit = 1), write 0 to the MPIE bit using the store instruction to avoid accidentally setting the MPIE bit to 1 by a read-modify-write operation when using a bit manipulation instruction.
Note 4. GPT clock is selectable for SCI1.

The SCR register controls operation and clock source selection for transmission and reception.

CKE[1:0] bits (Clock Enable)

The CKE[1:0] bits select the clock source and the SCKn pin function.

TEIE bit (Transmit End Interrupt Enable)

The TEIE bit enables or disables SCIn_TEI interrupt requests. Set TEIE to 0 to disable an SCIn_TEI interrupt request.

In simple IIC mode, SCIn_TEI is allocated to the interrupt on completion of issuing a start, restart, or stop condition (STIn). In this case, the TEIE bit can be used to enable or disable the STI.

MPIE bit (Multi-Processor Interrupt Enable)

When the MPIE bit is set to 1 and data with the multi-processor bit set to 0 is received, the data is not read and setting the status flags RDRF, ORER, FER, RDF, and DR in SSR/SSR_FIFO to 1 is disabled. When data with the multi-processor bit set to 1 is received, the MPIE bit is automatically set to 0, and normal reception resumes. For details, see section 25.4. Multi-Processor Communication Function.

When the MPB bit in the SSR register is 0, the receive data is not transferred from the RSR register to the RDR register, a receive error is not detected, and setting the flags ORER and FER to 1 is disabled.

When the MPB bit is set to 1, the MPIE bit is automatically set to 0, SCIn_RXI and SCIn_ERI interrupt requests are enabled (if the RIE bit in SCR is set to 1), and setting of the ORER and FER flags to 1 is enabled.

Set MPIE to 0 if the multi-processor communications function is not used.

RE bit (Receive Enable)

The RE bit enables or disables serial reception. When the RE bit is set to 1, serial reception starts by detecting the start bit in asynchronous mode or the synchronous clock input in clock synchronous mode. Set the reception format in the SMR register before setting the RE bit to 1.

In non-FIFO operation, when reception is halted by setting the RE bit to 0, the RDRF, ORER, FER, and PER flags in the SSR register are not affected, and the previous values are retained.

When FIFO operation is selected and reception is halted by setting the RE bit to 0, the RDF, ORER, FER, PER, and DR flags in SSR_FIFO are not affected and the previous values are retained.

TE bit (Transmit Enable)

The TE bit enables or disables serial transmission.

When the TE bit is set to 1, serial transmission is started by writing transmit data to the TDR register. Set the transmission format in the SMR register before setting the TE bit to 1.

RIE bit (Receive Interrupt Enable)

The RIE bit enables or disables SCIn_RXI and SCIn_ERI interrupt requests.

SCIn_RXI and SCIn_ERI interrupt requests are disabled by setting the RIE bit to 0.

An SCIn_ERI interrupt request can be canceled by reading 1 from the ORER, FER, or PER flag in SSR/SSR_FIFO then setting the flag to 0, or by setting the RIE bit to 0.

TIE bit (Transmit Interrupt Enable)

The TIE bit enables or disables SCIn_TXI interrupt requests. SCIn_TXI interrupt requests are disabled by setting the TIE bit to 0.

Note: To switch the TIE bit value from 0 to 1 in FIFO mode, set the TIE and TE bits to 1 simultaneously or set the TIE bit to 1 when TE = 1. When TE = 0 in FIFO mode, setting the TIE bit to 1 is prohibited.

25.2.14 SCR_SMCI : Serial Control Register for Smart Card Interface Mode (SCMR.SMIF = 1)

Base address: SCIn = 0x4011_8000 + 0x0100 × n (n = 0, 5, 9)
SCIk = 0x4011_8000 + 0x0100 × k (k = 3, 4)
SCI1 = 0x4011_8100

Offset address: 0x02

Bit position:	7	6	5	4	3	2	1	0
Bit field:	TIE	RIE	TE	RE	MPIE	TEIE	CKE[1:0]	
Value after reset:	0	0	0	0	0	0	0	0

Bit	Symbol	Function	R/W
1:0	CKE[1:0]	Clock Enable 0 0: When SMR_SMCI.GM = 0: Disable output The SCKn pin is available for use as an I/O port if set up in the I/O port settings When SMR_SMCI.GM = 1: Fix output low 0 1: When SMR_SMCI.GM = 0: Output clock When SMR_SMCI.GM = 1: Output clock 1 0: When SMR_SMCI.GM = 0: Setting prohibited When SMR_SMCI.GM = 1: Fix output high 1 1: When SMR_SMCI.GM = 0: Setting prohibited When SMR_SMCI.GM = 1: Output clock	R/W*1
2	TEIE	Transmit End Interrupt Enable Set this bit to 0 in smart card interface mode	R/W
3	MPIE	Multi-Processor Interrupt Enable Set this bit to 0 in smart card interface mode	R/W
4	RE	Receive Enable 0: Disable serial reception 1: Enable serial reception	R/W*2
5	TE	Transmit Enable 0: Disable serial transmission 1: Enable serial transmission	R/W*2
6	RIE	Receive Interrupt Enable 0: Disable SCIn_RXI and SCIn_ERI interrupt requests 1: Enable SCIn_RXI and SCIn_ERI interrupt requests	R/W
7	TIE	Transmit Interrupt Enable 0: Disable SCIn_TXI interrupt requests 1: Enable SCIn_TXI interrupt requests	R/W

Note 1. Writable only when TE = 0 and RE = 0.
Note 2. Can only be written as 1 when TE = 0 and RE = 0. After setting TE or RE to 1, only 0 can be written to TE and RE.

The SCR_SMCI register sets transmission and reception control, interrupt control, and clock source selection for transmission and reception.

For details on interrupt requests, see section 25.12. Interrupt Sources.

CKE[1:0] bits (Clock Enable)

The CKE[1:0] bits control the clock output from the SCKn pin. In GSM mode, clock output can be dynamically switched. For details, see section 25.7.8. Clock Output Control.

TEIE bit (Transmit End Interrupt Enable)

Set the TEIE bit to 0 in smart card interface mode.

MPIE bit (Multi-Processor Interrupt Enable)

Set the MPIE bit to 0 in smart card interface mode.

RE bit (Receive Enable)

The RE bit enables or disables serial reception. When the RE bit is set to 1, serial reception starts by detecting the start bit. Set the reception format in the SMR_SMCI register before setting the RE bit to 1.

If reception is halted by setting the RE bit to 0, the ORER, FER, and PER flags in SSR_SMCI are not affected and the previous values are retained.

TE bit (Transmit Enable)

The TE bit enables or disables serial transmission. When the TE bit is set to 1, serial transmission is started by writing transmit data to TDR. Set the transmission format in the SMR_SMCI register before setting the TE bit to 1.

RIE bit (Receive Interrupt Enable)

The RIE bit enables or disables SCIn_RXI and SCIn_ERI interrupt requests.

SCIn_RXI and SCIn_ERI interrupt requests are disabled by setting the RIE bit to 0.

An SCIn_ERI interrupt request can be canceled by reading 1 from the ORER, FER, or PER flag in the SSR_SMCI register, and then setting the flag to 0, or by setting the RIE bit to 0.

TIE bit (Transmit Interrupt Enable)

The TIE bit enables or disables SCIn_TXI interrupt requests. SCIn_TXI interrupt requests are disabled by setting the TIE bit to 0.

25.2.15 SSR : Serial Status Register for Non-Smart Card Interface and Non-FIFO Mode (SCMR.SMIF = 0, FCR.FM = 0, and MMR.MANEN = 0)

Base address: SCIn = 0x4011_8000 + 0x0100 × n (n = 0, 5, 9)
SCIk = 0x4011_8000 + 0x0100 × k (k = 3, 4)
SCI1 = 0x4011_8100

Offset address: 0x04

Bit position:	7	6	5	4	3	2	1	0
Bit field:	TDRE	RDRF	ORER	FER	PER	TEND	MPB	MPBT
Value after reset:	1	0	0	0	0	1	0	0

Bit	Symbol	Function	R/W
0	MPBT	Multi-Processor Bit Transfer Sets the value of the multi-processor bit in the transmission frame. 0: Data transmission cycle 1: ID transmission cycle	R/W
1	MPB	Multi-Processor Value of the multi-processor bit in the reception frame. 0: Data transmission cycle 1: ID transmission cycle	R
2	TEND	Transmit End Flag 0: A character is being transmitted 1: Character transfer is complete	R
3	PER	Parity Error Flag 0: No parity error occurred 1: Parity error occurred	R/(W)*1
4	FER	Framing Error Flag 0: No framing error occurred 1: Framing error occurred	R/(W)*1
5	ORER	Overrun Error Flag 0: No overrun error occurred 1: Overrun error occurred	R/(W)*1

Bit	Symbol	Function	R/W
6	RDRF	Receive Data Full Flag 0: No received data in RDR register 1: Received data in RDR register	R/(W)*1
7	TDRE	Transmit Data Empty Flag 0: Transmit data in TDR register 1: No transmit data in TDR register	R/(W)*1

Note 1. Only 0 can be written to clear the flag after reading 1.

The SSR register provides SCI status flags and transmission and reception multi-processor bits.

MPBT bit (Multi-Processor Bit Transfer)

The MPBT bit sets the value of the multi-processor bit in the transmit frame.

MPB bit (Multi-Processor)

The MPB bit holds the value of the multi-processor bit in the reception frame. This bit does not change when the SCR.RE bit is 0.

TEND flag (Transmit End Flag)

The TEND flag indicates completion of transmission.

[Setting conditions]

- When the SCR.TE bit is set to 0 (serial transmission is disabled) and the FCR.FM bit is set to 0 (non-FIFO selected). When the SCR.TE bit is set to 1, the TEND flag is not affected and retains the value 1.
- When the TDR register is not updated on transmission of the tail-end bit of a character being transmitted.

[Clearing conditions]

- When transmit data is written to the TDR register while the SCR.TE bit is 1
- When 0 is written to TDRE after reading TDRE = 1 while the SCR.TE bit is 1

PER flag (Parity Error Flag)

The PER flag indicates that a parity error occurred during reception in asynchronous mode and the reception ended abnormally.

[Setting condition]

- When a parity error is detected during reception in asynchronous mode when the address match function is disabled (DCCR.DCME = 0).

  Although receive data is transferred to the RDR register when the parity error occurs, no SCIn_RXI interrupt request occurs. When the PER flag is set to 1, the subsequent receive data is not transferred to the RDR register.

[Clearing condition]

- When 0 is written to PER after reading PER = 1. After writing 0 to the PER flag, read the PER flag to check that it is actually set to 0.

When the SCR.RE bit is set to 0 (serial reception is disabled), the PER flag is not affected and retains its previous value.

FER flag (Framing Error Flag)

The FER flag indicates that a framing error occurred during reception in asynchronous mode and the reception ended abnormally.

[Setting condition]

- When 0 is sampled as the stop bit during reception in asynchronous mode when the address match function is disabled (DCCR.DCME = 0).

  In 2-stop-bit mode, only the first stop bit is checked. The second stop bit is not checked. Although receive data is transferred to the RDR register when the framing error occurs, no SCIn_RXI interrupt request occurs. When the FER flag is to 1, the subsequent receive data is not transferred to the RDR register.

[Clearing condition]

- When 0 is written to FER after reading FER = 1. After writing 0 to the FER flag, read the FER flag to check that it is actually set to 0.

When the SCR.RE bit is set to 0 (serial reception is disabled), the FER flag is not affected and retains its previous value.

ORER flag (Overrun Error Flag)

The ORER flag indicates that an overrun error occurred during reception and the reception ended abnormally.

[Setting condition]

- When the next data is received before receive data that does not have a parity error and a framing error is read from the RDR register.

  The data received before an overrun error occurred is saved in the RDR register, but data received after the error is lost. When the ORER flag is set to 1, receive data is not forwarded to the RDR register. In clock synchronous mode, serial transmission and reception are stopped.

[Clearing condition]

- When 0 is written to ORER after reading ORER = 1. After writing 0 to the ORER flag, read the ORER flag to check that it is actually set to 0.

When the SCR.RE bit is set to 0 (serial reception is disabled), the ORER flag is not affected and retains its previous value.

RDRF flag (Receive Data Full Flag)

The RDRF flag indicates the presence of receive data in the RDR register.

[Setting condition]

- When the reception ends normally, and receive data is forwarded from the RSR register to the RDR register.

[Clearing conditions]

- When 0 is written to RDRF after reading RDRF = 1
- When data is forwarded from the RDR register

TDRE flag (Transmit Data Empty Flag)

The TDRE flag indicates the presence of transmit data in the TDR register.

[Setting conditions]

- When the SCR.TE bit is 0
- When data is transmitted from the TDR register to the TSR register

[Clearing conditions]

- When 0 is written to TDRE after reading TDRE = 1
- When the SCR.TE bit is 1 and data is written to the TDR register

25.2.16 SSR_FIFO : Serial Status Register for Non-Smart Card Interface and FIFO Mode (SCMR.SMIF = 0, FCR.FM = 1, and MMR.MANEN = 0)

Base address: SCIn = 0x4011_8000 + 0x0100 × n (n = 0, 5, 9)
SCIk = 0x4011_8000 + 0x0100 × k (k = 3, 4)

Offset address: 0x04

Bit position:	7	6	5	4	3	2	1	0
Bit field:	TDFE	RDF	ORER	FER	PER	TEND	—	DR
Value after reset:	1	0	0	0	0	0	x	0

Bit	Symbol	Function	R/W
0	DR	Receive Data Ready Flag 0: Receiving is in progress, or no received data remains in FRDRHL after successfully completed reception (receive FIFO empty) 1: Next receive data is not received for a period after normal receiving is complete, when the amount of data stored in the FIFO is equal to or less than the receive triggering number	R/W*1
1	—	The read value is undefined. The write value should be 1.	R/W
2	TEND	Transmit End Flag 0: A character is being transmitted 1: Character transfer is complete	R/W*1
3	PER	Parity Error Flag 0: No parity error occurred 1: Parity error occurred	R/W*1
4	FER	Framing Error Flag 0: No framing error occurred 1: Framing error occurred	R/W*1
5	ORER	Overrun Error Flag 0: No overrun error occurred 1: Overrun error occurred	R/W*1
6	RDF	Receive FIFO Data Full Flag 0: The amount of receive data written in FRDRHL is less than the specified receive triggering number 1: The amount of receive data written in FRDRHL is equal to or greater than the specified receive triggering number	R/W*1
7	TDFE	Transmit FIFO Data Empty Flag 0: The amount of transmit data written in FTDRHL exceeds the specified transmit triggering number 1: The amount of transmit data written in FTDRHL is equal to or less than the specified transmit triggering number	R/W*1

Note 1. Only 0 can be written, to clear the flag after reading 1.

The SSR_FIFO register provides the SCI with FIFO mode status flags.

DR flag (Receive Data Ready Flag)

The DR flag indicates that the amount of data stored in the Receive FIFO Data Register (FRDRHL) falls below the specified receive triggering number, and that no next data is received after 15 etus (elementary time units) from the last stop bit in asynchronous mode. This flag is valid only in asynchronous mode, including multi-processor mode, when FIFO operation is selected.

In clock synchronous mode, the DR flag is not set to 1.

[Setting condition]

- When FRDRHL contains less data than the specified receive triggering number, and no next data is received after 15 etus*1 from the last stop bit, and the SSR_FIFO.FER and SSR_FIFO.PER flags are 0.

[Clearing conditions]

- When 1 is read from DR, after all received data is read
- When the FCR.FM bit is changed from 0 to 1

Note 1. This is equivalent to 1.5 frames in the 8-bit format with one stop bit.

The DR flag is only set to 1 when FIFO is selected in asynchronous mode, including multi-processor mode. It is not set to 1 in other operation modes.

TEND flag (Transmit End Flag)

The TEND flag indicates that FTDRHL does not contain valid data when transmitting the last bit of a serial character, so the transmission is halted.

[Setting condition]

- When FTDRHL does not contain transmit data when the last bit of a 1-byte serial character is transmitted.

[Clearing conditions]

- When transmit data is written to FTDRHL[*1] while the SCR.TE bit is 1
- When 0 is written to TEND after 1 is read from TEND, when the SCR.TE bit is 1
- When the FCR.FM bit is changed from 0 to 1

Note 1. Do not use the TEND bit as a transmit end flag when the DTC writes data to FTDRHL in response to an SCIn_TXI interrupt request.

PER flag (Parity Error Flag)

The PER flag indicates whether there is a parity error in the data read from the FRDRHL register in asynchronous mode when the address match function is disabled (DCCR.DCME = 0).

[Setting condition]

- When data is received and a parity error is detected, when the address match function is disabled (DCCR.DCME = 0).

[Clearing condition]

- When 0 is written to PER after reading PER = 1.

The reception operation is continuous, and the receive data is stored in the FRDRHL register, even when a parity error occurs during reception.

When the SCR.RE bit is set to 0 (serial reception is disabled), the PER flag is not affected and retains its previous value.

FER flag (Framing Error Flag)

The FER flag indicates whether there is a framing error in the data read from the FRDRHL register in asynchronous mode when the address match function is disabled (DCCR.DCME = 0).

[Setting condition]

- When 0 is sampled as the stop bit during reception when the address match function is disabled (DCCR.DCME = 0).

[Clearing condition]

- When 0 is written to FER after reading FER = 1.

The reception operation is continuous, and the receive data is stored in the FRDRHL register, even when a framing error occurs during reception.

When the SCR.RE bit is set to 0 (serial reception is disabled), the FER flag is not affected and retains its previous value.

ORER flag (Overrun Error Flag)

The ORER flag indicates that the receive operation stopped abnormally because an overrun error occurred.

[Setting condition]

- When the next serial reception completes while the receive FIFO is full with 16-byte receive data.

[Clearing condition]

- When 0 is written to ORER after reading ORER = 1.

When the SCR.RE bit is set to 0 (serial reception is disabled), the ORER flag is not affected and retains its previous value.

RDF flag (Receive FIFO Data Full Flag)

The RDF flag indicates that receive data was transferred to the FRDRHL register, and the amount of data in FRDRHL is equal to or exceeds the specified receive triggering number. When RTRG is set to 0, the RDF flag is not set even when the amount of data in the receive FIFO is equal to 0.

[Setting condition]

- When the amount of receive data equal to or greater than the specified receive triggering number is stored in FRDRHL,[*1] and the FIFO is not empty.

[Clearing conditions]

- When 0 is written to RDF after reading RDF = 1
- When FRDRHL is read by the DTC, but only when the block transfer is the last transmission
- When the setting and clearing conditions occur at the same time, the RDF bit is set to 0. After that, when the amount of data stored in the FRDRHL register is the same as or greater than the RTRG value, RDF is set to 1 after 1 PCLK.

Note 1. Because FRDRHL is a 16-stage FIFO register, the maximum amount of data that can be read when RDF is 1 is equivalent to the specified receive triggering number. If an attempt is made to read after all the data in FRDRHL is read, the data is undefined.

TDFE flag (Transmit FIFO Data Empty Flag)

The TDFE flag indicates that data is transferred from the FTDRHL register into the TSR register, the amount of data in FTDRHL is below the specified transmit triggering number, and writing of transmit data to FTDRHL is enabled.

[Setting conditions]

- When the TE bit in SCR is 0
- When the amount of transmit data written in FTDRHL is equal to or less than the specified transmit triggering number*1

[Clearing conditions]

- When writing to FTDRHL is executed on the last transmission while the DTC is activated
- When 0 is written to the TDFE flag after reading TDFE = 1.*2
  The setting conditions are given priority when TE = 0. When the setting condition and clearing condition occur at the same time, the TDFE flag is set to 0. After that, when the amount of data stored in the FTDRHL register is equal to or less than the TTRG value, TDFE is set to 1 after 1 PCLK.

Note 1. Because the FTDRHL register is a 16-stage FIFO register, when the TDFE flag is 1, the maximum amount of data that can be written to the FTDRHL register is 16 minus FDR.T[4:0] bytes. If more data is written, data is discarded.
Note 2. Do not clear the TDFE flag during block transfer processing by the DTC.

25.2.17 SSR_SMCI : Serial Status Register for Smart Card Interface Mode (SCMR.SMIF = 1, and MMR.MANEN = 0)

Base address: SCIn = 0x4011_8000 + 0x0100 × n (n = 0, 5, 9)
SCIk = 0x4011_8000 + 0x0100 × k (k = 3, 4)
SCI1 = 0x4011_8100

Offset address: 0x04

Bit position:	7	6	5	4	3	2	1	0
Bit field:	TDRE	RDRF	ORER	ERS	PER	TEND	MPB	MPBT
Value after reset:	1	0	0	0	0	1	0	0

Bit	Symbol	Function	R/W
0	MPBT	Multi-Processor Bit Transfer Set this bit to 0 in smart card interface mode	R/W
1	MPB	Multi-Processor Set this bit to 0 in smart card interface mode	R
2	TEND	Transmit End Flag 0: A character is being transmitted 1: Character transfer is complete	R
3	PER	Parity Error Flag 0: No parity error occurred 1: Parity error occurred	R/W*1
4	ERS	Error Signal Status Flag 0: No low error signal response 1: Low error signal response occurred	R/W*1

Bit	Symbol	Function	R/W
5	ORER	Overrun Error Flag 0: No overrun error occurred 1: Overrun error occurred	R/W*1
6	RDRF	Receive Data Full Flag 0: No received data in RDR register 1: Received data in RDR register	R/W*1
7	TDRE	Transmit Data Empty Flag 0: Transmit data in TDR register 1: No transmit data in TDR register	R/W*1

Note 1. Only 0 can be written, to clear the flag after reading 1.

The SSR_SMCI register provides the SCI with smart card interface mode status flags.

TEND flag (Transmit End Flag)

When there is no error signal from the receiving side, the TEND flag is set to 1 when more data for transfer is ready to be transferred to the TDR register.

[Setting conditions]

- When the SCR_SMCI.TE bit = 0 (serial transmission is disabled).
  When the SCR_SMCI.TE bit is changed from 0 to 1, the TEND flag is not affected and retains the value 1.
- When a specified period elapses after the latest transmission of 1 byte, the ERS flag is 0, and the TDR register is not updated.

  The set timing is determined by the following register settings:
  - When SMR_SMCI.GM = 0 and SMR_SMCI.BLK = 0, 12.5 etus after the start of transmission
  - When SMR_SMCI.GM = 0 and SMR_SMCI.BLK = 1, 11.5 etus after the start of transmission
  - When SMR_SMCI.GM = 1 and SMR_SMCI.BLK = 0, 11.0 etus after the start of transmission
  - When SMR_SMCI.GM = 1 and SMR_SMCI.BLK = 1, 11.0 etus after the start of transmission

[Clearing conditions]

- When transmit data is written to the TDR register while the SCR_SMCI.TE bit is 1
- When 0 is written to TDRE after reading TDRE = 1 while the SCR_SMCI.TE bit is 1

PER flag (Parity Error Flag)

The PER flag indicates that a parity error occurred during reception in asynchronous mode and the reception ended abnormally.

[Setting condition]

- When a parity error is detected during reception. Although receive data is transferred to RDR when a parity error occurs, no SCIn_RXI interrupt request occurs. After the PER flag is set to 1, the subsequent receive data is not transferred to RDR.

[Clearing condition]

- When 0 is written to PER after reading PER = 1. After writing 0 to the PER flag, read the flag to check that it is actually set to 0.

When the RE bit in SCR_SMCI is set to 0 (serial reception is disabled), the PER flag is not affected and retains its previous value.

ERS flag (Error Signal Status Flag)

[Setting condition]

- When a low error signal is sampled.

[Clearing condition]

- When 0 is written to ERS after reading ERS = 1.

ORER flag (Overrun Error Flag)

The ORER flag indicates that an overrun error occurred during reception and the reception ended abnormally.

[Setting condition]

- When the next data is received before receive data that does not have a parity error is read from the RDR register. The data received before an overrun error occurred is saved in the RDR, but data received after the error is lost. When the ORER flag is set to 1, receive data is not forwarded to the RDR register.

[Clearing condition]

- When 0 is written to ORER after reading ORER = 1. After writing 0 to the ORER flag, read the flag to check that it is actually set to 0.

When the RE bit in SCR_SMCI is set to 0, the ORER flag is not affected and retains its previous value.

RDRF flag (Receive Data Full Flag)

The RDRF flag indicates the presence of receive data in the RDR register.

[Setting condition]

- When the reception ends normally, and receive data is forwarded from the RSR register to the RDR register.

[Clearing conditions]

- When 0 is written to RDRF after reading RDRF = 1
- When data is forwarded from the RDR register

TDRE flag (Transmit Data Empty Flag)

The TDRE flag indicates the presence of transmit data in the TDR register.

[Setting conditions]

- When the SCR_SMCI.TE bit is 0
- When data is transmitted from the TDR register to the TSR register

[Clearing conditions]

- When 0 is written to TDRE after reading TDRE = 1
- When the SCR_SMCI.TE bit is 1 and data is written to the TDR register

25.2.18 SSR_MANC : Serial Status Register for Manchester Mode (SCMR.SMIF = 0, and MMR.MANEN = 1)

Base address: SCIk = 0x4011_8000 + 0x0100 × k (k = 3, 4)

Offset address: 0x04

Bit position:	7	6	5	4	3	2	1	0
Bit field:	TDRE	RDRF	ORER	FER	PER	TEND	MPB	MER
Value after reset:	1	0	0	0	0	1	0	0

Bit	Symbol	Function	R/W
0	MER	Manchester Error Flag Valid for Manchester mode only 0: No Manchester error occurred 1: Manchester error has occurred	R/(W)*1

Bit	Symbol	Function	R/W
1	MPB	Multi-Processor Value of the multi-processor bit in the reception frame 0: Data transmission cycles 1: ID transmission cycles	R
2	TEND	Transmit End Flag 0: A character is being transmitted 1: Character transfer has been completed	R
3	PER	Parity Error Flag 0: No parity error occurred 1: A parity error has occurred	R/(W)*1
4	FER	Framing Error Flag 0: No framing error occurred 1: A framing error has occurred	R/(W)*1
5	ORER	Overrun Error Flag 0: No overrun error occurred 1: An overrun error has occurred	R/(W)*1
6	RDRF	Receive Data Full Flag 0: No received data is in RDR register 1: Received data is in RDR register	R/(W)*1
7	TDRE	Transmit Data Empty Flag 0: Transmit data is in TDR register 1: No transmit data is in TDR register	R/(W)*1

Note 1. Only 0 can be written to this bit, to clear the flag after confirmed (read) the flag is set to 1.

SSR is constructed in the status flag of SCI and reception multi processor bits.

MER flag (Manchester Error Flag)

When data is received in Manchester mode, Manchester error is detected and it is displayed.

[Setting conditions]

- When receiving in Manchester mode and detecting Manchester code error in data area of received frame.
  Received data when an error occurs is transferred to the RDR register, but the RXI interrupt request is not generated and the ERI interrupt request is generated.
  When the Manchester error flag is set to “1”, subsequent receive data is not transferred to the RDR register.
  For details on Manchester error, see section 25.5.11. Errors in Manchester Mode.

[Clearing conditions]

- When 0 is written to MER after 1 is read (after writing 0 to it, read the MER bit to check that it is actually set to 0.)
  Even when the RE bit in SCR is set to 0 (serial reception is disabled), the MER flag is not affected and retains its previous value.

MPB flag (Multi-Processor)

Holds the value of the multi-processor bit in the reception frame. This bit does not change when the SCR.RE bit is 0.

TEND flag (Transmit End Flag)

Indicates completion of transmission.

[Setting conditions]

- When the SCR.TE bit is set to 0 (serial transmission is disabled) and FCR.FM bit is set to 0 (non-FIFO selected).
  When the SCR.TE bit is changed from 0 to 1, the TEND flag is not affected and retains the value 1.
- When the TDR register is not updated at the time of transmission of the tail-end bit of a character being transmitted

[Clearing conditions]

- When transmit data are written to the TDR register while the SCR.TE bit is 1.
- When 0 is written to TDRE after 1 is read while the SCR.TE bit is 1.

PER flag (Parity Error Flag)

Indicates that a parity error has occurred during reception in asynchronous mode and the reception ends abnormally.

[Setting condition]

- When a parity error is detected during reception in Asynchronous Mode and the state of Address Match function invalidity (DCCR.DCME = 0).
  Although receive data when the parity error occurs is transferred to RDR, no RXI interrupt request occurs. Note that when the PER flag is being set to 1, the subsequent receive data is not transferred to RDR.

[Clearing condition]

- When 0 is written to PER after 1 is read (after writing 0 to it, read the PER bit to check that it is actually set to 0.)

Even when the RE bit in SCR is set to 0 (serial reception is disabled), the PER flag is not affected and retains its previous value.

FER flag (Framing Error Flag)

Indicates that a framing error has occurred during reception in asynchronous mode and the reception ends abnormally.

[Setting condition]

- When 0 is sampled as the stop bit during reception in Asynchronous Mode and the state of Address Match function invalidity (DCCR.DCME = 0).
  In 2-stop-bit mode, only the first stop bit is checked whether it is 1 but the second stop bit is not checked. Note that although receive data when the framing error occurs is transferred to RDR, no RXI interrupt request occurs. In addition, when the FER flag is being set to 1, the subsequent receive data is not transferred to RDR.

[Clearing condition]

- When 0 is written to FER after 1 is read (after writing 0 to it, read the FER bit to check that it is actually set to 0.)

Even when the RE bit in SCR is set to 0, the FER flag is not affected and retains its previous value.

ORER flag (Overrun Error Flag)

Indicates that an overrun error has occurred during reception and the reception ends abnormally.

[Setting condition]

- When the next data is received before receive data is read from RDR which don’t have any valid reception error.
  In RDR, receive data prior to an overrun error occurrence is retained, but data received after the overrun error occurrence is lost. When the ORER flag is set to 1, reception data isn’t forwarded to RDR register. Note that, in clock synchronous mode, serial transmission and reception are stopped.

[Clearing condition]

- When 0 is written to ORER after 1 is read (after writing 0 to it, read the ORER bit to check that it is actually set to 0.)

Even when the RE bit in SCR is set to 0, the ORER flag is not affected and retains its previous value.

RDRF flag (Receive Data Full Flag)

Indicates the presence of receive data in the RDR register.

[Setting condition]

- When the reception ends normally, and receive data is forwarded from the RSR register to the RDR register

[Clearing conditions]

- When 0 is written to RDRF after 1 is read
- When it reads the data from the RDR register

TDRE flag (Transmit Data Empty Flag)

Indicates the presence of transmit data in the TDR register.

[Setting conditions]

- When the SCR.TE bit is 0
- When data is transmitted from the TDR register to the TSR register

[Clearing conditions]

- When 0 is written to TDRE after 1 is read
- When the SCR.TE bit is 1, it is written to the TDR register

Note: RDRF and TDRE should not be cleared by SSR register access unless communication is interrupted.

25.2.19 SCMR : Smart Card Mode Register

Base address: SCIn = 0x4011_8000 + 0x0100 × n (n = 0, 5, 9)
SCIk = 0x4011_8000 + 0x0100 × k (k = 3, 4)
SCI1 = 0x4011_8100

Offset address: 0x06

Bit position:	7	6	5	4	3	2	1	0
Bit field:	BCP2	—	—	CHR1	SDIR	SINV	—	SMIF
Value after reset:	1	1	1	1	0	0	1	0

Bit	Symbol	Function	R/W
0	SMIF	Smart Card Interface Mode Select 0: Non-smart card interface mode (asynchronous mode, clock synchronous mode, simple SPI mode, or simple IIC mode) 1: Smart card interface mode	R/W*1
1	—	This bit is read as 1. The write value should be 1.	R/W
2	SINV	Transmitted/Received Data Invert Set the SINV bit to 0 for operation in simple IIC mode. The level of communication terminals (RXD, TXD) are controlled by combination of this bit and SPTR.TINV/RINV. For details, see Figure 25.6. The SINV bit can be used in the following modes: ● Smart card interface mode ● Asynchronous mode (including multi-processor mode) ● Clock synchronous mode ● Simple SPI mode 0: TDR contents are transmitted as they are. Received data is stored as received in the RDR register. 1: TDR register contents are inverted before transmission. Receive data is stored in inverted form in the RDR register.	R/W*1
3	SDIR	Transmitted/Received Data Transfer Direction Set the SDIR bit to 1 for operation in simple IIC mode. The SDIR bit can be used in the following modes: ● Smart card interface mode ● Asynchronous mode (including multi-processor mode) ● Clock synchronous mode ● Simple SPI mode 0: Transfer LSB-first 1: Transfer MSB-first	R/W*1
4	CHR1	Character Length 1 Valid only in asynchronous mode.*2 Selects the transmit/receive character length in combination with the SMR.CHR bit. 0: SMR.CHR = 0: Transmit/receive in 9-bit data length SMR.CHR = 1: Transmit/receive in 9-bit data length 1: SMR.CHR = 0: Transmit/receive in 8-bit data length (initial value) SMR.CHR = 1: Transmit/receive in 7-bit data length*3	R/W*1
6:5	—	These bits are read as 1. The write value should be 1.	R/W

Bit	Symbol	Function	R/W
7	BCP2	Base Clock Pulse 2 Selects the number of base clock cycles in combination with the SMR_SMCI.BCP[1:0] bits. Table 25.5 lists the combinations of the SCMR.BCP2 and SMR_SMCI.BCP[1:0] bits.	R/W*1

Note 1. Writable only when the TE and RE bits in SCR/SCR_SMCI are 0 (both serial transmission and reception are disabled).
Note 2. The setting is invalid and a fixed data length of 8 bits is used in modes other than asynchronous mode.
Note 3. LSB-first must be selected and the value of the MSB (bit [7]) in TDR cannot be transmitted.

The SCMR register selects the smart card interface and communication format.

SMIF bit (Smart Card Interface Mode Select)

Setting the SMIF bit to 1 selects smart card interface mode. Setting it to 0 selects all other modes:

- Asynchronous mode, including multi-processor mode
- Clock synchronous mode
- Simple SPI mode
- Simple IIC mode

SINV bit (Transmitted/Received Data Invert)

The SINV bit inverts the transmit and receive data logic level. It does not affect the logic level of the parity bit. To invert the parity bit, invert the PM bit in SMR or SMR_SMCI.

CHR1 bit (Character Length 1)

The CHR1 bit selects the data length of transmit and receive data in combination with the CHR bit in the SMR register. A fixed data length of 8 bits is used in modes other than asynchronous mode.

BCP2 bit (Base Clock Pulse 2)

The BCP2 bit selects the number of base clock cycles in a 1-bit data transfer time in smart card interface mode. Set this bit in combination with the SMR_SMCI.BCP[1:0] bits.

Table 25.5 Combinations of the SCMR.BCP2 and SMR_SMCI.BCP[1:0] bits

SCMR.BCP2 bit	SMR_SMCI.BCP[1:0] bits	Number of base clock cycles for 1-bit transfer period
0	00b	93 clock cycles (S = 93)*1
0	01b	128 clock cycles (S = 128)*1
0	10b	186 clock cycles (S = 186)*1
0	11b	512 clock cycles (S = 512)*1
1	00b	32 clock cycles (S = 32) (Initial Value)*1
1	01b	64 clock cycles (S = 64)*1
1	10b	372 clock cycles (S = 372)*1
1	11b	256 clock cycles (S = 256)*1

Note 1. S is the value of S in section 25.2.20. BRR : Bit Rate Register.

25.2.20 BRR : Bit Rate Register

Base address: SCIn = 0x4011_8000 + 0x0100 × n (n = 0, 5, 9)
SCIk = 0x4011_8000 + 0x0100 × k (k = 3, 4)
SCI1 = 0x4011_8100

Offset address: 0x01

Bit position:	7	6	5	4	3	2	1	0
Bit field:								
Value after reset:	1	1	1	1	1	1	1	1

BRR is an 8-bit register that adjusts the bit rate.

As each SCI channel has independent baud rate generator control, different bit rates can be set for each channel. Table 25.6 shows the relationship between the setting (N) in the BRR and the bit rate (B) for normal asynchronous mode, multi-processor transfer, clock synchronous mode, smart card interface mode, simple SPI mode, and simple IIC mode.

The initial value of the BRR register is 0xFF. The BRR register can be read by the CPU, but it can be written to only when the TE and RE bits in SCR/SCR_SMCI are 0.

Table 25.6 Relationship between N setting in BRR and bit rate B

Mode	SEMR settings			BRR setting	Error
	BGDM bit	ABCS bit	ABCS E bit		
Asynchronous, multi-processor transfer	0	0	0	$N = \frac{PCLK \times 10^6}{64 \times 2^{2n-1} \times B} - 1$	$Error\ (\%) = \left\{\frac{PCLK \times 10^6}{B \times 64 \times 2^{2n-1} \times (N+1)} - 1\right\} \times 100$
	1	0	0	$N = \frac{PCLK \times 10^6}{32 \times 2^{2n-1} \times B} - 1$	$Error\ (\%) = \left\{\frac{PCLK \times 10^6}{B \times 32 \times 2^{2n-1} \times (N+1)} - 1\right\} \times 100$
	0	1	0		
	1	1	0	$N = \frac{PCLK \times 10^6}{16 \times 2^{2n-1} \times B} - 1$	$Error\ (\%) = \left\{\frac{PCLK \times 10^6}{B \times 16 \times 2^{2n-1} \times (N+1)} - 1\right\} \times 100$
	Don't care	Don't care	1	$N = \frac{PCLK \times 10^6}{12 \times 2^{2n-1} \times B} - 1$	$Error\ (\%) = \left\{\frac{PCLK \times 10^6}{B \times 12 \times 2^{2n-1} \times (N+1)} - 1\right\} \times 100$
Clock synchronous, simple SPI				$N = \frac{PCLK \times 10^6}{8 \times 2^{2n-1} \times B} - 1$	—
Smart card interface				$N = \frac{PCLK \times 10^6}{S \times 2^{2n+1} \times B} - 1$	$Error\ (\%) = \left\{\frac{PCLK \times 10^6}{B \times S \times 2^{2n+1} \times (N+1)} - 1\right\} \times 100$
Simple IIC*1				$N = \frac{PCLK \times 10^6}{64 \times 2^{2n-1} \times B} - 1$	—

Note: B: Bit rate (bps)
N: BRR setting for on-chip baud rate generator (0 ≤ N ≤ 255)
PCLK: Operating frequency (MHz)
n and S: Determined by the SMR/SMR_SMCI and SCMR register settings as listed in Table 25.8 and Table 25.9.

Note 1. Adjust the bit rate so that the widths of high and low level of the SCLn output in simple IIC mode satisfy the I^2C bus standard.

Table 25.7 Calculating widths of SCLn high and low levels

Mode	SCLn	Formula (result in seconds)
IIC	Width at high level (minimum value)	$(N+1) \times 4 \times 2^{2n-1} \times 7 \times \frac{1}{PCLK \times 10^6}$
	Width at low level (minimum value)	$(N+1) \times 4 \times 2^{2n-1} \times 8 \times \frac{1}{PCLK \times 10^6}$

Table 25.8 Clock source settings

SMR or SMR_SMCI.CKS[1:0] bits setting		
CKS[1:0] bits	Clock source	n
00b	PCLK clock	0
01b	PCLK/4 clock	1
10b	PCLK/16 clock	2
11b	PCLK/64 clock	3

Table 25.9 Base clock settings in smart card interface mode

SCMR.BCP2 bit setting	SMR_SMCI.BCP[1:0] bits setting		
BCP2 bit	**BCP[1:0] bits**	**Base clock cycles for 1-bit period**	**S**
0	00b	93 clock cycles	93
0	01b	128 clock cycles	128
0	10b	186 clock cycles	186
0	11b	512 clock cycles	512
1	00b	32 clock cycles	32
1	01b	64 clock cycles	64
1	10b	372 clock cycles	372
1	11b	256 clock cycles	256

Table 25.10 and Table 25.11 list examples of BRR (N) settings in normal asynchronous mode. Table 25.12 lists the maximum bit rate settable for each operating frequency. Table 25.16 lists examples of BRR (N) settings in smart card interface mode.

In smart card interface mode, the number of base clock cycles S in a 1-bit data transfer time can be selected. For details, see section 25.7.4. Receive Data Sampling Timing and Reception Margin. Table 25.13 and Table 25.15 list the maximum bit rates with external clock input.

When either the Asynchronous Mode Base Clock Select bit (ABCS) or the Baud Rate Generator Double-speed Mode Select bit (BGDM) in the Simple LIN Mode Register (SEMR) is set to 1 in asynchronous mode, the bit rate becomes twice the value listed in Table 25.17. When both of those registers are set to 1, the bit rate becomes four times the listed value.

Table 25.10 Examples of BRR settings for different bit rates in asynchronous mode (1) (1 of 3)

Bit rate (bps)	Operating frequency PCLK (MHz)														
	8			9.8304			10			12			12.288		
	n	N	Error (%)	n	N	Error (%)	n	N	Error (%)	n	N	Error (%)	n	N	Error (%)
110	2	141	0.03	2	174	-0.26	2	177	-0.25	2	212	0.03	2	217	0.08
150	2	103	0.16	2	127	0.00	2	129	0.16	2	155	0.16	2	159	0.00
300	1	207	0.16	1	255	0.00	2	64	0.16	2	77	0.16	2	79	0.00
600	1	103	0.16	1	127	0.00	1	129	0.16	1	155	0.16	1	159	0.00
1200	0	207	0.16	0	255	0.00	1	64	0.16	1	77	0.16	1	79	0.00
2400	0	103	0.16	0	127	0.00	0	129	0.16	0	155	0.16	0	159	0.00
4800	0	51	0.16	0	63	0.00	0	64	0.16	0	77	0.16	0	79	0.00
9600	0	25	0.16	0	31	0.00	0	32	-1.36	0	38	0.16	0	39	0.00
19200	0	12	0.16	0	15	0.00	0	15	1.73	0	19	-2.34	0	19	0.00
31250	0	7	0.00	0	9	-1.70	0	9	0.00	0	11	0.00	0	11	2.40
38400	—	—	—	0	7	0.00	0	7	1.73	0	9	-2.34	0	9	0.00

Table 25.10 Examples of BRR settings for different bit rates in asynchronous mode (1) (2 of 3)

Bit rate (bps)	Operating frequency PCLK (MHz)														
	14			16			17.2032			18			19.6608		
	n	N	Error (%)	n	N	Error (%)	n	N	Error (%)	n	N	Error (%)	n	N	Error (%)
110	2	248	-0.17	3	70	0.03	3	75	0.48	3	79	-0.12	3	86	0.31
150	2	181	0.16	2	207	0.16	2	223	0.00	2	233	0.16	2	255	0.00
300	2	90	0.16	2	103	0.16	2	111	0.00	2	116	0.16	2	127	0.00
600	1	181	0.16	1	207	0.16	1	223	0.00	1	233	0.16	1	255	0.00
1200	1	90	0.16	1	103	0.16	1	111	0.00	1	116	0.16	1	127	0.00

Table 25.10 Examples of BRR settings for different bit rates in asynchronous mode (1) (3 of 3)

Bit rate (bps)	Operating frequency PCLK (MHz)														
	14			16			17.2032			18			19.6608		
	n	N	Error (%)	n	N	Error (%)	n	N	Error (%)	n	N	Error (%)	n	N	Error (%)
2400	0	181	0.16	0	207	0.16	0	223	0.00	0	233	0.16	0	255	0.00
4800	0	90	0.16	0	103	0.16	0	111	0.00	0	116	0.16	0	127	0.00
9600	0	45	-0.93	0	51	0.16	0	55	0.00	0	58	-0.69	0	63	0.00
19200	0	22	-0.93	0	25	0.16	0	27	0.00	0	28	1.02	0	31	0.00
31250	0	13	0.00	0	15	0.00	0	16	1.20	0	17	0.00	0	19	-1.70
38400	—	—	—	0	12	0.16	0	13	0.00	0	14	-2.34	0	15	0.00

Note: In this example, SEMR.ABCS = 0, SEMR.ABCSE = 0, and SEMR.BGDM = 0.
When either the ABCS or BGDM bit is set to 1, the bit rate doubles.
When both ABCS and BGDM are set to 1, the bit rate increases four times.

Table 25.11 Examples of BRR settings for different bit rates in asynchronous mode (2) (1 of 2)

Bit rate (bps)	Operating frequency PCLK (MHz)														
	20			25			30			33			40		
	n	N	Error (%)	n	N	Error (%)	n	N	Error (%)	n	N	Error (%)	n	N	Error (%)
110	3	88	-0.25	3	110	-0.02	3	132	0.13	3	145	0.33	3	177	-0.25
150	3	64	0.16	3	80	0.47	3	97	-0.35	3	106	0.39	3	129	0.16
300	2	129	0.16	2	162	-0.15	2	194	0.16	2	214	-0.07	3	64	0.16
600	2	64	0.16	2	80	0.47	2	97	-0.35	2	106	0.39	2	129	0.16
1200	1	129	0.16	1	162	-0.15	1	194	0.16	1	214	-0.07	2	64	0.16
2400	1	64	0.16	1	80	0.47	1	97	-0.35	1	106	0.39	1	129	0.16
4800	0	129	0.16	0	162	-0.15	0	194	0.16	0	214	-0.07	1	64	0.16
9600	0	64	0.16	0	80	0.47	0	97	-0.35	0	106	0.39	0	129	0.16
19200	0	32	-1.36	0	40	-0.76	0	48	-0.35	0	53	-0.54	0	64	0.16
31250	0	19	0.00	0	24	0.00	0	29	0.00	0	32	0.00	0	39	0.00
38400	0	15	1.73	0	19	1.73	0	23	1.73	0	26	-0.54	0	32	-1.36

Table 25.11 Examples of BRR settings for different bit rates in asynchronous mode (2) (2 of 2)

Bit rate (bps)	Operating frequency PCLK (MHz)								
	50			60			80		
	n	N	Error (%)	n	N	Error (%)	n	N	Error (%)
110	3	221	-0.02	—	—	—	—	—	—
150	3	162	-0.15	3	194	0.16	—	—	—
300	3	80	0.47	3	97	-0.35	3	129	0.16
600	2	162	-0.15	3	48	-0.35	3	64	0.16
1200	2	80	0.47	2	97	-0.35	2	129	0.16
2400	1	162	-0.15	2	48	-0.35	2	64	0.16
4800	1	80	0.47	1	97	-0.35	1	129	0.16
9600	0	162	-0.15	1	48	-0.35	1	64	0.16
19200	0	80	0.47	0	97	-0.35	0	129	0.16
31250	0	49	0.00	0	59	0.00	0	79	0.00
38400	0	40	-0.76	0	48	-0.35	0	64	0.16

Note: In this example, SEMR.ABCS = 0, SEMR.ABCSE = 0, and SEMR.BGDM = 0.
When either the ABCS or BGDM bit is set to 1, the bit rate doubles.
When both ABCS = 1 and BGDM = 1, the bit rate quadruples.

Table 25.12 Maximum bit rate for each operating frequency in asynchronous mode (1 of 2)

PCLK (MHz)	SEMR settings					Maximum bit rate (bps)	PCLK (MHz)	SEMR settings					Maximum bit rate (bps)
	BGDM bit	ABCS bit	ABCSE bit	n	N			BGDM bit	ABCS bit	ABCSE bit	n	N	
8	0	0	0	0	0	250,000	16	0	0	0	0	0	500,000
		1	0	0	0	500,000			1	0	0	0	1,000,000
	1	0	0	0	0			1	0	0	0	0	
		1	0	0	0	1,000,000			1	0	0	0	2,000,000
	Don’t care	Don’t care	1	0	0	1,333,333		Don’t care	Don’t care	1	0	0	2,666,666
9.8304	0	0	0	0	0	307,200	17.2032	0	0	0	0	0	537,600
		1	0	0	0	614,400			1	0	0	0	1,075,200
	1	0	0	0	0			1	0	0	0	0	
		1	0	0	0	1,228,800			1	0	0	0	2,150,400
	Don’t care	Don’t care	1	0	0	1,638,400		Don’t care	Don’t care	1	0	0	2,867,200
10	0	0	0	0	0	312,500	18	0	0	0	0	0	562,500
		1	0	0	0	625,000			1	0	0	0	1,125,000
	1	0	0	0	0			1	0	0	0	0	
		1	0	0	0	1,250,000			1	0	0	0	2,250,000
	Don’t care	Don’t care	1	0	0	1,666,666		Don’t care	Don’t care	1	0	0	3,000,000
12	0	0	0	0	0	375,000	19.6608	0	0	0	0	0	614,400
		1	0	0	0	750,000			1	0	0	0	1,228,800
	1	0	0	0	0			1	0	0	0	0	
		1	0	0	0	1,500,000			1	0	0	0	2,457,600
	Don’t care	Don’t care	1	0	0	2,000,000		Don’t care	Don’t care	1	0	0	3,276,800
12.288	0	0	0	0	0	384,000	20	0	0	0	0	0	625,000
		1	0	0	0	768,000			1	0	0	0	1,250,000
	1	0	0	0	0			1	0	0	0	0	
		1	0	0	0	1,536,000			1	0	0	0	2,500,000
	Don’t care	Don’t care	1	0	0	2,048,000		Don’t care	Don’t care	1	0	0	3,333,333
14	0	0	0	0	0	437,500	25	0	0	0	0	0	781,250
		1	0	0	0	875,000			1	0	0	0	1,562,500
	1	0	0	0	0			1	0	0	0	0	
		1	0	0	0	1,750,000			1	0	0	0	3,125,000
	Don’t care	Don’t care	1	0	0	2,333,333		Don’t care	Don’t care	1	0	0	4,166,666
30	0	0	0	0	0	937,500	50	0	0	0	0	0	1,562,500
		1	0	0	0	1,875,000			1	0	0	0	3,125,000
	1	0	0	0	0			1	0	0	0	0	
		1	0	0	0	3,750,000			1	0	0	0	6,250,000
	Don’t care	Don’t care	1	0	0	5,000,000		Don’t care	Don’t care	1	0	0	8,333,333

Table 25.12 Maximum bit rate for each operating frequency in asynchronous mode (2 of 2)

PCLK (MHz)	SEMR settings					Maximum bit rate (bps)	PCLK (MHz)	SEMR settings					Maximum bit rate (bps)
	BGDM bit	ABCS bit	ABCSE bit	n	N			BGDM bit	ABCS bit	ABCSE bit	n	N	
33	0	0	0	0	0	1,031,250	60	0	0	0	0	0	1,875,000
		1	0	0	0	2,062,500			1	0	0	0	3,750,000
	1	0	0	0	0			1	0	0	0	0	
		1	0	0	0	4,125,000			1	0	0	0	7,500,000
	Don’t care	Don’t care	1	0	0	5,500,000		Don’t care	Don’t care	1	0	0	10,000,000
40	0	0	0	0	0	1,250,000	80	0	0	0	0	0	2,500,000
		1	0	0	0	2,500,000			1	0	0	0	5,000,000
	1	0	0	0	0			1	0	0	0	0	
		1	0	0	0	5,000,000			1	0	0	0	10,000,000
	Don’t care	Don’t care	1	0	0	6,666,666		Don’t care	Don’t care	1	0	0	13,333,333

Table 25.13 Maximum bit rate with external clock input in asynchronous mode

Maximum bit rate (bps)			
PCLK (MHz)	External input clock (MHz)	SEMR.ABCS = 0	SEMR.ABCS = 1
8	2.0000	125,000	250,000
9.8304	2.4576	153,600	307,200
10	2.5000	156,250	312,500
12	3.0000	187,500	375,000
12.288	3.0720	192,000	384,000
14	3.5000	218,750	437,500
16	4.0000	250,000	500,000
17.2032	4.3008	268,800	537,600
18	4.5000	281,250	562,500
19.6608	4.9152	307,200	614,400
20	5.0000	312,500	625,000
25	6.2500	390,625	781,250
30	7.5000	468,750	937,500
33	8.2500	515,625	1,031,250
40	10.0000	625,000	1,250,000
50	12.5000	781,250	1,562,500
60	15.0000	937,500	1,875,000
80	20.000	1,250,000	2,500,000

Table 25.14 BRR settings for different bit rates in clock synchronous and simple SPI modes (1 of 2)

Bit rate (bps)	Operating frequency PCLK (MHz)																					
	8		10		16		20		25		30		33		40		50		60		80	
	n	N	n	N	n	N	n	N	n	N	n	N	n	N	n	N	n	N	n	N	n	N
110																						
250	3	124	—	—	3	249																
500	2	249	—	—	3	124	—	—			3	233										
1 k	2	124	—	—	2	249	—	—	3	97	3	116	3	128	3	155	3	194	3	233		

Table 25.14 BRR settings for different bit rates in clock synchronous and simple SPI modes (2 of 2)

Bit rate (bps)	Operating frequency PCLK (MHz)																					
	8		10		16		20		25		30		33		40		50		60		80	
	n	N	n	N	n	N	n	N	n	N	n	N	n	N	n	N	n	N	n	N	n	N
2.5 k	1	199	1	249	2	99	2	124	2	155	2	187	2	205	2	249	3	77	3	93	3	124
5 k	1	99	1	124	1	199	1	249	2	77	2	93	2	102	2	124	2	155	3	46	2	249
10 k	0	199	0	249	1	99	1	124	1	155	1	187	1	205	1	249	2	77	2	93	2	124
25 k	0	79	0	99	0	159	0	199	0	249	1	74	1	82	1	99	1	124	1	149	1	199
50 k	0	39	0	49	0	79	0	99	0	124	0	149	0	164	1	49	1	61	1	74	1	99
100 k	0	19	0	24	0	39	0	49	0	62	0	74	0	82	0	99	0	124	0	149	0	199
250 k	0	7	0	9	0	15	0	19	0	24	0	29	0	32	0	39	0	49	0	59	0	79
500 k	0	3	0	4	0	7	0	9	—	—	0	14	—	—	0	19	0	24	0	29	0	39
1 M	0	1			0	3	0	4	—	—	—	—	—	—	0	9	—	—	0	14	0	19
2.5 M			0	0*1			0	1	—	—	0	2	—	—	0	3	0	4	0	5	0	7
5 M							0	0*1	—	—	—	—	—	—	0	1	—	—	0	2	0	3
7.5 M											0	0*1							0	1	—	—
10 M															0	0*1					0	1
15 M																			0	0*1		

Note: Space: Setting prohibited.
—: Can be set, but an error occurs.

Note 1. Continuous transmission or reception is not possible. After transmitting or receiving one frame of data, a 1-bit period elapses before starting to transmit or receive the next frame of data. The output of the synchronization clock is stopped for a 1-bit period. Therefore, it takes 9 bits worth of time to transfer one frame (8 bits) of data, and the average transfer rate is 8/9 times the bit rate. When the FIFO is selected, this setting (BRR = 0x00 and SMR.CKS[1:0] = 00b) is not available.

Table 25.15 Maximum bit rate with external clock input in clock synchronous and simple SPI modes

PCLK (MHz)	External input clock (MHz)	Maximum bit rate (Mbps)
8	1.3333	1.3333333
10	1.6667	1.6666667
12	2.0000	2.0000000
14	2.3333	2.3333333
16	2.6667	2.6666667
18	3.0000	3.0000000
20	3.3333	3.3333333
25	4.1667	4.1666667
30	5.0000	5.0000000
33	5.5000	5.5000000
40	6.6667	6.6666667
50	8.3333	8.3333333
60	10.0000	10.0000000
80	13.3333	13.3333333

Table 25.16 BRR settings for different bit rates in smart card interface mode, n = 0, S = 372 (1 of 4)

Bit rate (bps)	Operating frequency PCLK (MHz)											
	7.1424			10.00			10.7136			13.00		
	n	N	Error (%)	n	N	Error (%)	n	N	Error (%)	n	N	Error (%)
9600	0	0	0.00	0	1	30	0	1	25	0	1	8.99

Table 25.16 BRR settings for different bit rates in smart card interface mode, n = 0, S = 372 (2 of 4)

Bit rate (bps)	Operating frequency PCLK (MHz)											
	14.2848			16.00			18.00			20.00		
	n	N	Error (%)	n	N	Error (%)	n	N	Error (%)	n	N	Error (%)
9600	0	1	0.00	0	1	12.01	0	2	15.99	0	2	6.66

Table 25.16 BRR settings for different bit rates in smart card interface mode, n = 0, S = 372 (3 of 4)

Bit rate (bps)	Operating frequency PCLK (MHz)											
	25.00			30.00			33.00			40.00		
	n	N	Error (%)	n	N	Error (%)	n	N	Error (%)	n	N	Error (%)
9600	0	3	12.49	0	3	5.01	0	4	7.59	0	5	-6.66

Table 25.16 BRR settings for different bit rates in smart card interface mode, n = 0, S = 372 (4 of 4)

Bit rate (bps)	Operating frequency PCLK (MHz)								
	50.00			60.00			80.00		
	n	N	Error (%)	n	N	Error (%)	n	N	Error (%)
9600	0	6	0.01	0	7	5.01	0	10	1.82

Table 25.17 Maximum bit rate for each operating frequency in smart card interface mode (S = 32)

PCLK (MHz)	Maximum bit rate (bps)	n	N
10.00	156,250	0	0
10.7136	167,400	0	0
13.00	203,125	0	0
16.00	250,000	0	0
18.00	281,250	0	0
20.00	312,500	0	0
25.00	390,625	0	0
30.00	468,750	0	0
33.00	515,625	0	0
40.00	625,000	0	0
50.00	781,250	0	0
60.00	937,500	0	0
80.00	1,250,000	0	0

Table 25.18 BRR settings for different bit rates in simple IIC mode (1 of 4)

Bit rate (bps)	Operating frequency PCLK (MHz)											
	8			10			16			20		
	n	N	Error (%)	n	N	Error (%)	n	N	Error (%)	n	N	Error (%)
10 k	0	24	0.0	0	31	-2.3	1	12	-3.8	1	15	-2.3

Table 25.18 BRR settings for different bit rates in simple IIC mode (2 of 4)

Bit rate (bps)	Operating frequency PCLK (MHz)											
	8			10			16			20		
	n	N	Error (%)	n	N	Error (%)	n	N	Error (%)	n	N	Error (%)
25 k	0	9	0.0	0	12	-3.8	1	4	0.0	1	6	-10.7
50 k	0	4	0.0	0	6	-10.7	1	2	-16.7	1	3	-21.9
100 k	0	2	-16.7	0	3	-21.9	0	4	0.0	0	6	-10.7
250 k	0	0	0.0	0	1	-37.5	0	1	0.0	0	2	-16.7
350 k										0	1	-10.7
400 k										0	1	-21.9

Table 25.18 BRR settings for different bit rates in simple IIC mode (3 of 4)

Bit rate (bps)	Operating frequency PCLK (MHz)											
	25			30			33			40		
	n	N	Error (%)	n	N	Error (%)	n	N	Error (%)	n	N	Error (%)
10 k	1	19	-2.3	1	23	-2.3	1	25	-0.8	0	124	0.00
25 k	1	7	-2.3	1	9	-6.3	1	10	-6.3	0	40	0.00
50 k	1	3	-2.3	1	4	-6.3	1	5	-14.1	0	24	0.00
100 k	1	1	-2.3	1	2	-21.9	1	2	-14.1	0	12	-3.85
250 k	0	3	-21.9	0	3	-6.3	0	4	-17.5	0	4	0.00
350 k	0	2	-25.6	0	2	-10.7	0	2	-1.8	0	3	-10.71
400 k	0	1	-2.3	0	1	17.2	0	2	-14.1	0	2	4.17

Table 25.18 BRR settings for different bit rates in simple IIC mode (4 of 4)

Bit rate (bps)	Operating frequency PCLK (MHz)								
	50			60			80		
	n	N	Error (%)	n	N	Error (%)	n	N	Error (%)
10 k	2	9	-2.3	1	46	-0.27	1	62	-0.79
25 k	2	3	-2.3	0	74	0.00	0	99	0.00
50 k	2	1	-2.3	0	37	-1.32	0	49	0.00
100 k	1	3	-2.3	0	18	-1.32	0	24	0.00
250 k	0	6	-10.7	0	7	-6.25	0	9	0.00
350 k	0	4	-10.7	0	4	7.14	0	6	2.04
400 k	0	3	-2.34	0	4	-6.25	0	5	4.17

Table 25.19 Minimum widths at SCL high and low levels at multiple bit rates in simple IIC mode (1 of 4)

Bit rate (bps)	Operating frequency PCLK (MHz)											
	8			10			16			20		
	n	N	Min. widths at SCL high/low levels (μs)	n	N	Min. widths at SCL high/low levels (μs)	n	N	Min. widths at SCL high/low levels (μs)	n	N	Min. widths at SCL high/low levels (μs)
10 k	0	24	43.75/50.00	0	31	44.80/51.20	1	12	45.5/52.00	1	15	44.80/51.20
25 k	0	9	17.50/20.00	0	12	18.2/20.80	1	4	17.50/20.00	1	6	19.60/22.40
50 k	0	4	8.75/10.00	0	6	9.80/11.20	1	2	10.50/12.00	1	3	11.20/12.80
100 k	0	2	5.25/6.00	0	3	5.60/6.40	0	4	4.37/5.00	0	6	4.90/5.60
250 k	0	0	1.75/2.00	0	1	2.80/3.20	0	1	1.75/2.00	0	2	2.10/2.40

Table 25.19 Minimum widths at SCL high and low levels at multiple bit rates in simple IIC mode (2 of 4)

Bit rate (bps)	Operating frequency PCLK (MHz)											
	8			10			16			20		
	n	N	Min. widths at SCL high/low levels (μs)	n	N	Min. widths at SCL high/low levels (μs)	n	N	Min. widths at SCL high/low levels (μs)	n	N	Min. widths at SCL high/low levels (μs)
350 k										0	1	1.40/1.60
400 k										0	1	1.40/1.60

Table 25.19 Minimum widths at SCL high and low levels at multiple bit rates in simple IIC mode (3 of 4)

Bit rate (bps)	Operating frequency PCLK (MHz)											
	25			30			33			40		
	n	N	Min. widths at SCL high/low levels (μs)	n	N	Min. widths at SCL high/low levels (μs)	n	N	Min. widths at SCL high/low levels (μs)	n	N	Min. widths at SCL high/low levels (μs)
10 k	1	19	44.80/51.20	1	23	44.80/51.20	1	25	44.12/50.42	1	32	46.20/52.80
25 k	1	7	17.92/20.48	1	9	18.66/21.33	1	10	18.66/21.33	1	12	18.20/20.80
50 k	1	3	8.96/10.24	1	4	9.33/10.66	1	5	10.18/11.63	1	6	9.80/11.20
100 k	1	1	4.48/5.12	1	2	5.60/6.40	1	2	5.09/5.81	0	13	4.90/5.60
250 k	0	3	2.24/2.56	0	3	1.86/2.13	0	4	2.12/2.42	0	4	1.75/2.00
350 k	0	2	1.68/1.92	0	2	1.40/1.60	0	2	1.27/1.45	0	3	1.40/1.60
400 k	0	1	1.12/1.28	0	1	0.93/1.07	0	2	1.27 /1.45	0	2	1.05/1.20

Table 25.19 Minimum widths at SCL high and low levels at multiple bit rates in simple IIC mode (4 of 4)

Bit rate (bps)	Operating frequency PCLK (MHz)								
	50			60			80		
	n	N	Min. widths at SCL high/low levels (μs)	n	N	Min. widths at SCL high/low levels (μs)	n	N	Min. widths at SCL high/low levels (μs)
10 k	2	9	44.80/51.20	1	46	44.80/51.20	1	62	44.10/50.40
25 k	2	3	17.92/20.48	0	74	17.50/20.00	0	99	17.50/20.00
50 k	2	1	8.96/10.24	0	37	8.87/10.13	0	49	8.75/10.00
100 k	1	3	4.48/5.12	0	18	4.43/5.07	0	24	4.38/5.00
250 k	0	6	1.96/2.24	0	7	1.87/2.13	0	9	1.75/2.00
350 k	0	4	1.40/1.60	0	4	1.17/1.33	0	6	1.23/1.40
400 k	0	3	1.12/1.28	0	4	1.17/1.33	0	5	1.05/1.20

25.2.21 MDDR : Modulation Duty Register

Base address: SCIn = 0x4011_8000 + 0x0100 × n (n = 0, 5, 9)
SCIk = 0x4011_8000 + 0x0100 × k (k = 3, 4)
SCI1 = 0x4011_8100

Offset address: 0x12

Bit position:	7	6	5	4	3	2	1	0
Bit field:								
Value after reset:	1	1	1	1	1	1	1	1

MDDR corrects the bit rate adjusted by the BRR register.

When the BRME bit in SEMR is set to 1, the bit rate generated by the on-chip baud rate generator is evenly corrected using the settings in MDDR (M/256). Table 25.20 shows the relationship between the MDDR setting (M) and the bit rate (B).

The initial value of MDDR is 0xFF. Bit [7] in this register is fixed to 1.

The CPU can read the MDDR register, but this register is only writable when the TE and RE bits in SCR/SCR_SMCI are 0.

Table 25.20 Relationship between MDDR setting (M) and bit rate (B) when bit rate modulation function is used

B: Bit rate (bps)
M: MDDR setting (128 ≤ MDDR ≤ 256)
N: BRR setting for baud rate generator (0 ≤ N ≤ 255)
PCLK: Operating frequency (MHz)
n and S: Determined by the SMR/SMR_SMCI and SCMR register settings as listed in Table 25.8 and Table 25.9 in section 25.2.20. BRR : Bit Rate Register.

Mode	SEMR settings			BRR setting	Error
	BGDM bit	ABCS bit	ABCSE bit		
Asynchronous multiprocessor transfer	0	0	0	$N = \frac{PCLK \times 10^6}{64 \times 2^{2n-1} \times (256/M) \times B} - 1$	$Error(\%) = \left\{\frac{PCLK \times 10^6}{B \times 64 \times 2^{2n-1} \times (256/M) \times (N+1)} - 1\right\} \times 100$
	1	0	0	$N = \frac{PCLK \times 10^6}{32 \times 2^{2n-1} \times (256/M) \times B} - 1$	$Error(\%) = \left\{\frac{PCLK \times 10^6}{B \times 32 \times 2^{2n-1} \times (256/M) \times (N+1)} - 1\right\} \times 100$
	0	1	0		
	1	1	0	$N = \frac{PCLK \times 10^6}{16 \times 2^{2n-1} \times (256/M) \times B} - 1$	$Error(\%) = \left\{\frac{PCLK \times 10^6}{B \times 16 \times 2^{2n-1} \times (256/M) \times (N+1)} - 1\right\} \times 100$
	×	×	1	$N = \frac{PCLK \times 10^6}{12 \times 2^{2n-1} \times (256/M) \times B} - 1$	$Error(\%) = \left\{\frac{PCLK \times 10^6}{B \times 12 \times 2^{2n-1} \times (256/M) \times (N+1)} - 1\right\} \times 100$
Clock synchronous, simple SPI*1				$N = \frac{PCLK \times 10^6}{8 \times 2^{2n-1} \times (256/M) \times B} - 1$	—
Smart card interface				$N = \frac{PCLK \times 10^6}{S \times 2^{2n+1} \times (256/M) \times B} - 1$	$Error(\%) = \left\{\frac{PCLK \times 10^6}{B \times S \times 2^{2n+1} \times (256/M) \times (N+1)} - 1\right\} \times 100$
Simple IIC*2				$N = \frac{PCLK \times 10^6}{64 \times 2^{2n-1} \times (256/M) \times B} - 1$	—

Note 1. Do not use this function in clock synchronous mode or in the highest speed settings in simple SPI mode (SMR.CKS[1:0] = 00b, SCR.CKE[1] = 0, and BRR = 0).
Note 2. Adjust the bit rate so that the widths at high and low level of the SCLn output in simple IIC mode satisfy the IIC standard.

Table 25.21 and Table 25.22 list examples of N settings in BRR and M settings in MDDR in normal asynchronous mode.

Table 25.21 Examples of the BRR and MDDR settings for different bit rates in asynchronous mode (1) (1 of 4)

Bit rate (bps)	Operating frequency PCLK (MHz)														
	8					9.8304					16				
	n	N	M	BGDM bit	Error (%)	n	N	M	BGDM bit	Error (%)	n	N	M	BGDM bit	Error (%)
38400	0	5	236	0	0.03	0	7	(256)*1	0	0.00	0	10	173	1	-0.01
57600	0	3	236	0	0.03	0	4	240	0	0.00	0	4	236	0	0.03
115200	0	1	236	0	0.03	0	1	192	0	0.00	0	4	236	1	0.03
230400	0	0	236	0	0.03	0	0	192	0	0.00	0	1	189	1	0.14

Table 25.21 Examples of the BRR and MDDR settings for different bit rates in asynchronous mode (1) (2 of 4)

Bit rate (bps)	Operating frequency PCLK (MHz)														
	8					9.8304					16				
	n	N	M	BGDM bit	Error (%)	n	N	M	BGDM bit	Error (%)	n	N	M	BGDM bit	Error (%)
460800	0	0	236	1	0.03	0	0	192	1	0.00	0	0	189	1	0.14

Table 25.21 Examples of the BRR and MDDR settings for different bit rates in asynchronous mode (1) (3 of 4)

Bit rate (bps)	Operating frequency PCLK (MHz)														
	12					12.288					14				
	n	N	M	BGDM bit	Error (%)	n	N	M	BGDM bit	Error (%)	n	N	M	BGDM bit	Error (%)
38400	0	8	236	0	0.03	0	9	(256)*1	0	0.00	0	16	191	1	0.00
57600	0	5	236	0	0.03	0	4	192	0	0.00	0	13	236	1	0.03
115200	0	2	236	0	0.03	0	4	192	1	0.00	0	6	236	1	0.03
230400	0	2	236	1	0.03	0	2	230	1	-0.17	0	2	202	1	-0.11
460800	0	0	157	1	-0.18	0	0	154	1	-0.26	0	0	135	1	0.14

Table 25.21 Examples of the BRR and MDDR settings for different bit rates in asynchronous mode (1) (4 of 4)

Bit rate (bps)	Operating frequency PCLK (MHz)														
	16					17.2032					18				
	n	N	M	BGDM bit	Error (%)	n	N	M	BGDM bit	Error (%)	n	N	M	BGDM bit	Error (%)
38400	0	11	236	0	0.03	0	13	(256)*1	0	0.00	0	18	166	1	-0.01
57600	0	7	236	0	0.03	0	6	192	0	0.00	0	18	249	1	-0.01
115200	0	3	236	0	0.03	0	6	192	1	0.00	0	8	236	1	0.03
230400	0	1	236	0	0.03	0	3	219	1	-0.20	0	1	210	0	0.14
460800	0	1	236	1	0.03	0	1	219	1	-0.20	0	0	210	0	0.14

Note 1. In this example, the ABCS and ABCSE bits in the SEMR register are 0. SEMR.BRME = 0 (M = 256) disables the bit rate modulation function.

Table 25.22 Examples of BRR and MDDR settings for different bit rates in asynchronous mode (2) (1 of 4)

Bit rate (bps)	Operating frequency PCLK (MHz)														
	19.6608					20					25				
	n	N	M	BGDM bit	Error (%)	n	N	M	BGDM bit	Error (%)	n	N	M	BGDM bit	Error (%)
38400	0	15	(256)*1	0	0.00	0	10	173	0	-0.01	0	11	151	0	0.00
57600	0	9	240	0	0.00	0	9	236	0	0.03	0	7	151	0	0.00
115200	0	4	240	0	0.00	0	4	236	0	0.03	0	3	151	0	0.00
230400	0	1	192	0	0.00	0	4	236	1	0.03	0	1	151	0	0.00
460800	0	0	192	0	0.00	0	0	189	0	0.14	0	0	151	0	0.00

Table 25.22 Examples of BRR and MDDR settings for different bit rates in asynchronous mode (2) (2 of 4)

Bit rate (bps)	Operating frequency PCLK (MHz)														
	30					33					40				
	n	N	M	BGDM bit	Error (%)	n	N	M	BGDM bit	Error (%)	n	N	M	BGDM bit	Error (%)
38400	0	36	194	1	0.01	0	14	143	0	0.01	0	21	173	0	-0.01

Table 25.22 Examples of BRR and MDDR settings for different bit rates in asynchronous mode (2) (3 of 4)

Bit rate (bps)	Operating frequency PCLK (MHz)														
	30					33					40				
	n	N	M	BGDM bit	Error (%)	n	N	M	BGDM bit	Error (%)	n	N	M	BGDM bit	Error (%)
57600	0	10	173	0	-0.01	0	9	143	0	0.01	0	38	230	1	-0.01
115200	0	10	173	1	-0.01	0	4	143	0	0.01	0	9	236	0	0.03
230400	0	6	220	1	-0.09	0	4	143	1	0.01	0	4	236	0	0.03
460800	0	3	252	1	0.14	0	1	229	0	0.10	0	4	236	1	0.03

Table 25.22 Examples of BRR and MDDR settings for different bit rates in asynchronous mode (2) (4 of 4)

Bit rate (bps)	Operating frequency PCLK (MHz)														
	50					60					80				
	n	N	M	BGDM bit	Error (%)	n	N	M	BGDM bit	Error (%)	n	N	M	BGDM bit	Error (%)
38400	0	23	151	0	0.00	0	36	194	0	0.01	0	116	230	1	-0.01
57600	0	15	151	0	0.00	0	21	173	0	-0.01	0	39	236	0	0.03
115200	0	7	151	0	0.00	0	10	173	0	-0.01	0	19	236	0	0.03
230400	0	3	151	0	0.00	0	10	173	1	-0.01	0	9	236	0	0.03
460800	0	1	151	0	0.00	0	6	220	1	-0.09	0	9	236	1	0.03

Note 1. In this example, the ABCS and ABCSE bits in the SEMR register are 0.
SEMR.BRME = 0 (M = 256) disables the bit rate modulation function.

25.2.22 SEMR : Simple LIN Mode Register

Base address: SCIn = 0x4011_8000 + 0x0100 × n (n = 0, 5, 9)
SCIk = 0x4011_8000 + 0x0100 × k (k = 3, 4)
SCI1 = 0x4011_8100

Offset address: 0x07

Bit position:	7	6	5	4	3	2	1	0
Bit field:	RXDESEL	BGDM	NFEN	ABCS	ABCSE	BRME	PADIS	ACS0
Value after reset:	0	0	0	0	0	0	0	0

Bit	Symbol	Function	R/W
0	ACS0	Asynchronous Mode Clock Source Select Valid only in asynchronous mode 0: External clock input 1: Logical AND of compare matches output from the internal GPT. These bit for the other SCI channels than SCIn (n = 1) are reserved.	R/W*1
1	PADIS	Preamble function Disable Valid only in asynchronous mode 0: Preamble output function is enabled 1: Preamble output function is disabled These bits for the other SCI channels than SCIn (n = 0, 3 to 5, 9) are reserved.	R/W
2	BRME	Bit Rate Modulation Enable 0: Disable bit rate modulation function 1: Enable bit rate modulation function	R/W*1
3	ABCSE	Asynchronous Mode Extended Base Clock Select 1 Valid only in asynchronous mode with SCR.CKE[1] = 0. 0: Clock cycles for 1-bit period determined by combination of the BGDM and ABCS bits in the SEMR register 1: Baud rate is 6 base clock cycles for 1-bit period These bits for the other SCI channels than SCIn (n = 0, 3 to 5, 9) are reserved.	R/W*1

Bit	Symbol	Function	R/W
4	ABCS	Asynchronous Mode Base Clock Select Valid only in asynchronous mode. 0: Select 16 base clock cycles for 1-bit period 1: Select 8 base clock cycles for 1-bit period	R/W*1
5	NFEN	Digital Noise Filter Function Enable The NFEN bit must be 0 in all other modes. 0: In asynchronous mode: Disable noise cancellation function for RXDn input signal In simple I2C mode: Disable noise cancellation function for SCLn and SDAn input signals 1: In asynchronous mode: Enable noise cancellation function for RXDn input signal In simple I2C mode: Enable noise cancellation function for SCLn and SDAn input signals	R/W*1
6	BGDM	Baud Rate Generator Double-Speed Mode Select Valid only in asynchronous mode with SCR.CKE[1] = 0. 0: Output clock from baud rate generator with normal frequency 1: Output clock from baud rate generator with doubled frequency	R/W*1
7	RXDESEL	Asynchronous Start Bit Edge Detection Select Valid only in asynchronous mode. 0: Detect low level on RXDn pin as start bit 1: Detect falling edge of RXDn pin as start bit	R/W*1

Note 1. Writable only when the TE and RE bits in SCR/SCR_SMCI are 0 (both serial transmission and reception are disabled).

The SEMR register selects the clock source for the 1-bit period in asynchronous mode.

ACS0 bit (Asynchronous Mode Clock Source Select)

Selects the clock source in the asynchronous mode.

The ACS0 bit is valid in asynchronous mode (SMR.CM bit = 0) and when an external clock input is selected (SCR.CKE[1:0] bits = 10b or 11b). This bit is used to select an external clock input or the logical AND of compare matches output from the internal GPT.

Set the ACS0 bit to 0 in other than asynchronous mode.

For SCI1, the GTIOCnA output (n = 3, 4) of GPT can be set as the serial transfer base clock. For details, see Table 25.23.

These bits for the other SCI channels than SCI1 are reserved. The write values to these bits for other than SCI1 should be 0.

Table 25.23 Correspondence between SCI Channels and Compare Match Outputs

SCI	GPT	Compare Match Output
SCI1	GPT3	GTIOC3A
	GPT4	GTIOC4A

Figure 25.4, Figure 25.5 show a setting example of when GTIOC3A and GTIOC4A are selected for output.

This figure shows an example when GPT clock is input to SCI1.

When generating 187.5 kbps of GPT average transfer rate for PCLKD = 32 MHz:

1. Generate a frequency of 4 MHz using GTIOC3A as the base clock.
2. Generate 3/4 clock enable of base clock to set an average transfer rate of 3 MHz/16 = 187.5 kbps using GTIOC4A.

Setting examples of GPT and SCI

- GPT3.GTSSR = 0x80000000, GPT4.GTSSR = 0x80000000 (enable software counter start)
- GPT3.GTPR = 0x00000007, GPT4.GTPR = 0x0000001F (maximum count value of GTCNT)
- GPT3.GTCCRA = 0x00000003, GPT4.GTCCRA = 0x00000007 (compare match value)
- GPT3.GTCR = 0x00000000, GPT4.GTCR = 0x00000000 (saw-wave PWM mode, timer prescaler is PCLKD/1)
- GPT3.GTIOR = 0x00000306, GPT4.GTIOR = 0x00000306

(Initial output low, output high at GTCCRA compare match, output low at cycle end)

- SCR.SCK[1:0] = 10b (external clock input or GPT clock input is selected)

- SEMR = 0x01 (TMR clock input is selected with 16 base clock cycles for 1-bit period)
- GPT3.GTSTR = 0x00000018 (software start GTCNT counter)

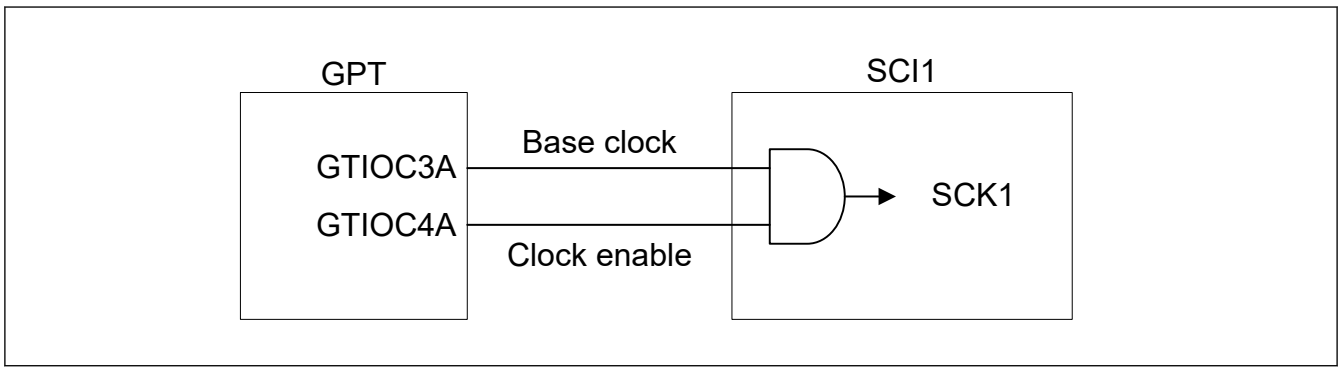

Figure 25.4 Example of GPT and SCI connection

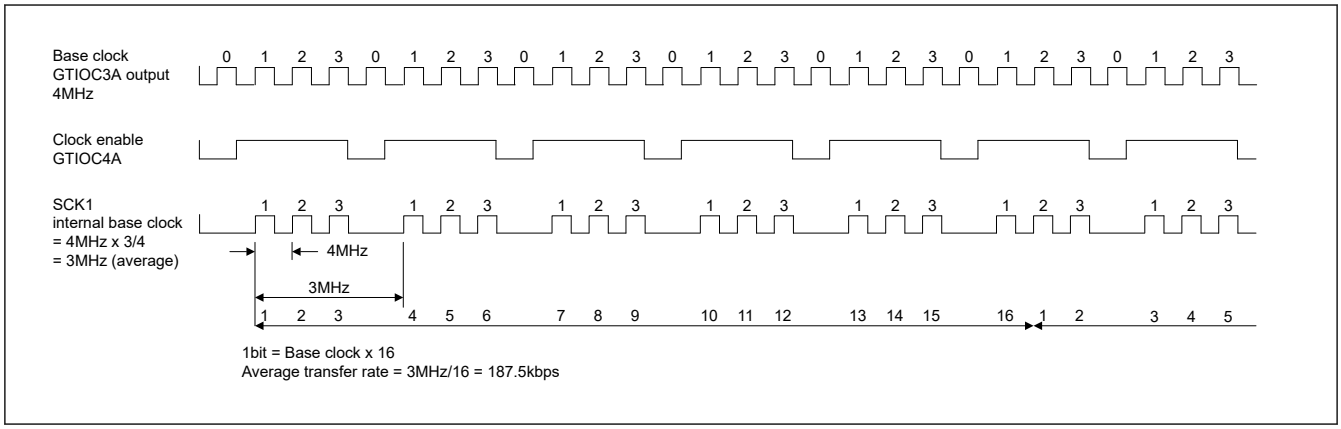

Figure 25.5 Example of average transfer rate setting when GPT clock is input

PADIS bit (Preamble function Disable)

In asynchronous mode, select enable / disable of preamble function. In Manchester mode, preamble is not output regardless of this bit setting

BRME bit (Bit Rate Modulation Enable)

The BRME bit enables or disables the bit rate modulation function. The bit rate generated by the on-chip baud rate generator is evenly corrected when this function is enabled. Set to 0 in Manchester mode.

ABCSE bit (Asynchronous Mode Extended Base Clock Select 1)

The ABCSE bit sets the pulse number for the base clock in a 1-bit period to 6, and the double-frequency clock is output from the baud rate generator. When the bit rate is set to 6 while dividing the bus clock frequency, use this bit and set SMR.CKS[1:0] = 00b and BRR = 0.

Set it to 0 in modes other than asynchronous mode. Even in asynchronous mode, set it to 0 when using external clock.

ABCS bit (Asynchronous Mode Base Clock Select)

The ABCS bit selects the number of clock cycles for a 1-bit period.

Set it to 0 in modes other than asynchronous mode and Manchester mode.

NFEN bit (Digital Noise Filter Function Enable)

The NFEN bit enables or disables the digital noise filter function.

When the digital noise filter function is enabled:

- Noise cancellation is applied to the RXDn input signal in asynchronous mode
- Noise cancellation is applied to the SDAn and SCLn input signals in simple I^2C mode

In all other modes, set the NFEN bit to 0 to disable the digital noise filter function. When the function is disabled, input signals are transferred as received.

BGDM bit (Baud Rate Generator Double-Speed Mode Select)

The BGDM bit selects whether or not to double the base clock frequency output from the baud rate generator.

The BGDM bit is valid when the on-chip baud rate generator is selected as the clock source (SCR.CKE[1] = 0) in asynchronous mode (SMR.CM = 0) or Manchester mode (MMR.MANEN = 1). When external clock is selected (SCR.CKE[1] = 1), set it to 0. The base clock is generated by the clock output from the baud rate generator. When the BGDM bit is set to 1, the base clock cycle is halved and the bit rate is doubled.

Set this bit to 0 in modes other than asynchronous mode or Manchester mode.

RXDESEL bit (Asynchronous Start Bit Edge Detection Select)

The RXDESEL bit selects the detection method of the start bit for reception in asynchronous mode. When a break occurs, data reception operation depends on the setting of this bit. Set this bit to 1 when reception must be stopped while a break occurs or when reception must be started without keeping the RXDn pin input at the high level for the period of one data frame or longer after completion of the break.

Set this bit to 0 in modes other than asynchronous mode.

25.2.23 SNFR : Noise Filter Setting Register

Base address: SCIn = 0x4011_8000 + 0x0100 × n (n = 0, 5, 9)
SCIk = 0x4011_8000 + 0x0100 × k (k = 3, 4)
SCI1 = 0x4011_8100

Offset address: 0x08

Bit position:	7	6	5	4	3	2	1	0
Bit field:	—	—	—	—	—	NFCS[2:0]		
Value after reset:	0	0	0	0	0	0	0	0

Bit	Symbol	Function	R/W
2:0	NFCS[2:0]	Noise Filter Clock Select In asynchronous mode, selects the standard setting for the base clock. In simple I^{2}C mode, selects the standard settings for the clock source of the on-chip baud rate generator selected in the SMR.CKS[1:0] bits. 0 0 0: In asynchronous mode: Use clock signal divided by 1 with noise filter In simple I^{2}C mode: Setting prohibited 0 0 1: In asynchronous mode: Setting prohibited In simple I^{2}C mode: Use clock signal divided by 1 with noise filter 0 1 0: In asynchronous mode: Setting prohibited In simple I^{2}C mode: Use clock signal divided by 2 with noise filter 0 1 1: In asynchronous mode: Setting prohibited In simple I^{2}C mode: Use clock signal divided by 4 with noise filter 1 0 0: In asynchronous mode: Setting prohibited In simple I^{2}C mode: Use clock signal divided by 8 with noise filter Others: Setting prohibited	R/W*1
7:3	—	These bits are read as 0. The write value should be 0.	R/W

Note 1. Writing to these bits is only possible when the RE and TE bits in SCR/SCR_SMCI are 0 (serial reception and transmission disabled).

The SNFR register sets the digital noise filter clock.

NFCS[2:0] bits (Noise Filter Clock Select)

The NFCS[2:0] bits select the sampling clock for the digital noise filter. To use the noise filter in asynchronous mode, set these bits to 000b. In simple I^{2}C mode, when 32 clocks are selected as one bit period in the basic clock selection bits of the SEMR register, set the NFCS [2: 0] bits in the range from 001b to 100b. When any other value is selected for the basic clock selection bit, set the NFCS bit to 001b.

25.2.24 SIMR1 : IIC Mode Register 1

Base address: SCIn = 0x4011_8000 + 0x0100 × n (n = 0, 5, 9)
SCIk = 0x4011_8000 + 0x0100 × k (k = 3, 4)
SCI1 = 0x4011_8100

Offset address: 0x09

Bit position:	7	6	5	4	3	2	1	0
Bit field:	IICDL[4:0]					—	—	IICM
Value after reset:	0	0	0	0	0	0	0	0

Bit	Symbol	Function	R/W
0	IICM	Simple IIC Mode Select 0: SCMR.SMIF = 0: Asynchronous mode (including multi-processor mode), clock synchronous mode, or simple SPI mode SCMR.SMIF = 1: Smart card interface mode 1: SCMR.SMIF = 0: Simple IIC mode SCMR.SMIF = 1: Setting prohibited	R/W*1
2:1	—	These bits are read as 0. The write value should be 0.	R/W
7:3	IICDL[4:0]	SDAn Delay Output Select SDAn signal output delay in cycles of the clock signal from the on-chip baud rate generator. 0x00: No output delay Others: (IICDL - 1) to (IICDL) cycles	R/W*1

Note 1. Writing to these bits is only possible when the RE and TE bits in the SCR register are 0 (both serial transmission and reception are disabled).

SIMR1 selects simple IIC mode and the number of delay stages for the SDAn output.

IICM bit (Simple IIC Mode Select)

In combination with the SCMR.SMIF bit, the IICM bit selects the operating mode.

IICDL[4:0] bits (SDAn Delay Output Select)

The IICDL[4:0] bits specify an output delay on the SDAn pin relative to the falling edge of the output on the SCLn pin.

The available delay settings range from no delay to 31 cycles, with the clock signal from the on-chip baud rate generator as the base. The signal obtained by frequency-dividing PCLK by the divisor set in SMR.CKS[1:0] is supplied as the clock signal from the on-chip baud rate generator. Set 00000b to IICDL[4:0] bits unless operation is in simple IIC mode. In simple IIC mode, set the bits to a value in the range from 00001b to 11111b.

Table 25.24 Settable value of IICDL[4: 0] bits in each communication mode

Communication mode	ABCS	Settable value of IICDL[4:0] bits
Other than simple IIC mode	Don't care	00000b
Simple IIC mode	0	00001b to 11111b
	1	00001b to 00100b

25.2.25 SIMR2 : IIC Mode Register 2

Base address: SCIn = 0x4011_8000 + 0x0100 × n (n = 0, 5, 9)
SCIk = 0x4011_8000 + 0x0100 × k (k = 3, 4)
SCI1 = 0x4011_8100

Offset address: 0x0A

Bit position:	7	6	5	4	3	2	1	0
Bit field:	—	—	IICACKT	—	—	—	IICCSC	IICINTM
Value after reset:	0	0	0	0	0	0	0	0

Bit	Symbol	Function	R/W
0	IICINTM	IIC Interrupt Mode Select 0: Use ACK/NACK interrupts 1: Use reception and transmission interrupts	R/W*1
1	IICCSC	Clock Synchronization 0: Do not synchronize with clock signal 1: Synchronize with clock signal	R/W*1
4:2	—	These bits are read as 0. The write value should be 0.	R/W
5	IICACKT	ACK Transmission Data 0: ACK transmission 1: NACK transmission and ACK/NACK reception	R/W
7:6	—	These bits are read as 0. The write value should be 0.	R/W

Note 1. Writing to these bits is only possible when the RE and TE bits in the SCR register are 0 (serial reception and transmission disabled).

SIMR2 selects how reception and transmission are controlled in simple IIC mode.

IICINTM bit (IIC Interrupt Mode Select)

The IICINTM bit selects the sources of interrupt requests in simple IIC mode.

IICCSC bit (Clock Synchronization)

Set the IICCSC bit to 1 if the internally generated SCLn clock signal is to be synchronized when the SCLn pin is driven low because a wait was inserted by another other device.

The SCLn clock signal is not synchronized if the IICCSC bit is 0. The SCLn clock signal is generated according to the rate selected in the BRR register regardless of the level being input on the SCLn pin.

Set the IICCSC bit to 1 except during debugging.

IICACKT bit (ACK Transmission Data)

Transmitted data contains ACK bits. Set the IICACKT bit to 1 when ACK and NACK bits are received.

25.2.26 SIMR3 : IIC Mode Register 3

Base address: SCIn = 0x4011_8000 + 0x0100 × n (n = 0, 5, 9)
SCIk = 0x4011_8000 + 0x0100 × k (k = 3, 4)
SCI1 = 0x4011_8100

Offset address: 0x0B

Bit position:	7	6	5	4	3	2	1	0
Bit field:	IICSCLS[1:0]		IICSDAS[1:0]		IICSTIF	IICSTPREQ	IICRSTAREQ	IICSTAREQ
Value after reset:	0	0	0	0	0	0	0	0

Bit	Symbol	Function	R/W
0	IICSTAREQ	Start Condition Generation 0: Do not generate start condition 1: Generate start condition*1 *3 *5 *6	R/W
1	IICRSTAREQ	Restart Condition Generation 0: Do not generate restart condition 1: Generate restart condition*2 *3 *5 *6	R/W
2	IICSTPREQ	Stop Condition Generation 0: Do not generate stop condition 1: Generate stop condition*2 *3 *5 *6	R/W

Bit	Symbol	Function	R/W
3	IICSTIF	Issuing of Start, Restart, or Stop Condition Completed Flag 0: No requests are being made for generating conditions, or a condition is being generated 1: Generation of start, restart, or stop condition is complete. When 0 is written to IICSTIF, it is set to 0*4	R/W*4
5:4	IICSDAS[1:0]	SDAn Output Select 0 0: Output serial data 0 1: Generate start, restart, or stop condition 1 0: Output low on SDAn pin 1 1: Drive SDAn pin to high-impedance state	R/W
7:6	IICSCLS[1:0]	SCLn Output Select 0 0: Output serial clock 0 1: Generate start, restart, or stop condition 1 0: Output low on SCLn pin 1 1: Drive SCLn pin to high-impedance state	R/W

Note 1. Only generate a start condition after checking the bus state and confirming that the bus is free.
Note 2. Generate a restart or stop condition after checking the bus state and confirming that the bus is busy.
Note 3. Do not set more than one of the IICSTAREQ, IICRSTAREQ, and IICSTPREQ bits to 1 at a given time.
Note 4. Write only 0. When 1 is written, the value is ignored.
Note 5. Execute the generation of a condition after the value of the IICSTIF flag is 0.
Note 6. Do not write 0 to this bit while it is 1. Generation of a condition is suspended by writing 0 to this bit while it is 1.

The SIMR3 register is used to control the start, restart, and stop conditions in the simple I^2C mode, and to hold the SSDAn and SSCLn pins at fixed levels.

IICSTAREQ bit (Start Condition Generation)

When a start condition is to be generated, set both IICSDAS[1:0] and IICSCLS[1:0] to 01b in addition to setting the IICSTAREQ bit to 1.

[Setting condition]

- On writing 1 to the bit.

[Clearing condition]

- On completion of start condition generation.

IICRSTAREQ bit (Restart Condition Generation)

When a restart condition is to be generated, set both IICSDAS[1:0] and IICSCLS[1:0] to 01b in addition to setting the IICRSTAREQ bit to 1.

[Setting condition]

- On writing 1 to the bit.

[Clearing condition]

- On completion of restart condition generation.

IICSTPREQ bit (Stop Condition Generation)

When a stop condition is to be generated, set both IICSDAS[1:0] and IICSCLS[1:0] to 01b in addition to setting the IICSTPREQ bit to 1.

[Setting condition]

- On writing 1 to the bit.

[Clearing condition]

- On completion of stop condition generation.

IICSTIF flag (Issuing of Start, Restart, or Stop Condition Completed Flag)

After generating a condition, the IICSTIF flag indicates that the condition generation is complete. When using the IICSTAREQ, IICRSTAREQ, or IICSTPREQ bit to cause generation of a condition, do so after setting the IICSTIF flag to 0.

When the IICSTIF flag is 1 while an interrupt request is enabled by setting the SCR.TEIE bit, an STI request is output.

[Setting condition]

- On completion of a start, restart, or stop condition generation.

  If the setting condition conflicts with any of the clearing conditions for the flag, the clearing condition takes precedence.

[Clearing conditions]

- On writing 0 to the bit. After writing 0 to the IICSTIF bit, read the bit to check that it is actually set to 0.
- On writing 0 to the SIMR1.IICM bit when operation is not in simple IIC mode.
- On writing 0 to the SCR.TE bit.

IICSDAS[1:0] bits (SDAn Output Select)

The IICSDAS[1:0] bits control output from the SDAn pin. Set IICSDAS[1:0] and IICSCLS[1:0]to the same value during normal operations.

IICSCLS[1:0] bits (SCLn Output Select)

The IICSCLS[1:0] bits control output from the SCLn pin. Set IICSDAS[1:0] and IICSCLS[1:0] to the same value during normal operations.

25.2.27 SISR : IIC Status Register

Base address: SCIn = 0x4011_8000 + 0x0100 × n (n = 0, 5, 9)
SCIk = 0x4011_8000 + 0x0100 × k (k = 3, 4)
SCI1 = 0x4011_8100

Offset address: 0x0C

Bit position:	7	6	5	4	3	2	1	0
Bit field:	—	—	—	—	—	—	—	IICACKR
Value after reset:	0	0	x	x	0	x	0	0

Bit	Symbol	Function	R/W
0	IICACKR	ACK Reception Data Flag 0: ACK received 1: NACK received	R
1	—	This bit is read as 0.	R
2	—	The read value is undefined.	R
3	—	This bit is read as 0.	R
5:4	—	The read value is undefined.	R
7:6	—	These bits are read as 0.	R

SISR monitors the state in simple IIC mode.

IICACKR flag (ACK Reception Data Flag)

Received ACK and NACK bits can be read from the IICACKR flag. The IICACKR flag is updated on the rising edge of the SCLn clock for the received ACK/NACK bit.

25.2.28 SPMR : SPI Mode Register

Base address: SCIn = 0x4011_8000 + 0x0100 × n (n = 0, 5, 9)
SCIk = 0x4011_8000 + 0x0100 × k (k = 3, 4)
SCI1 = 0x4011_8100

Offset address: 0x0D

Bit position:	7	6	5	4	3	2	1	0
Bit field:	CKPH	CKPOL	—	MFF	CTSPEN	MSS	CTSE	SSE
Value after reset:	0	0	0	0	0	0	0	0

Bit	Symbol	Function	R/W
0	SSE	SSn Pin Function Enable 0: Disable SSn pin function 1: Enable SSn pin function	R/W*1
1	CTSE	CTS Enable 0: Disable CTS function (enable RTS output function) 1: Enable CTS function	R/W*1
2	MSS	Master Slave Select 0: Transmit through TXDn pin and receive through RXDn pin (master mode) 1: Receive through TXDn pin and transmit through RXDn pin (slave mode)	R/W*1
3	CTSPEN	CTS External Pin Enable 0: Alternate setting to use CTS and RTS functions as either one terminal 1: Dedicated setting for separately using CTS and RTS functions with 2 terminals These bits for the other SCI channels than SCIn (n = 0, 3 to 5, 9) are reserved.	R/W
4	MFF	Mode Fault Flag 0: No mode fault error 1: Mode fault error	R/W*2
5	—	This bit is read as 0. The write value should be 0.	R/W
6	CKPOL	Clock Polarity Select 0: Do not invert clock polarity 1: Invert clock polarity	R/W*1
7	CKPH	Clock Phase Select 0: Do not delay clock 1: Delay clock	R/W*1

Note 1. Writing to these bits is only possible when the RE and TE bits in the SCR register are 0 (both serial transmission and reception are disabled).
Note 2. Only 0 can be written to this bit, to clear the flag.

SPMR selects the extension settings in asynchronous and clock synchronous modes.

SSE bit (SSn Pin Function Enable)

Set the SSE bit to 1 to use the SSn pin to control transmission and reception in simple SPI mode. Set this bit to 0 in all other modes. In simple SPI mode, when master mode is selected (SCR.CKE[1:0] = 00b and SPMR.MSS = 0) and there is a single master, the SSn pin on the master side is not required to control reception and transmission. In such a case, set the SSE bit to 0. Do not set both the SSE and CTSE bits to 1. If this setting is made, operation is the same as that when these bits are set to 0.

CTSE bit (CTS Enable)

Set the CTSE bit to 1 if the SSn pin is to be used for inputting the CTS control signal to control transmission and reception. The RTS signal is output when this bit is set to 0. Set this bit to 0 in smart card interface mode, simple SPI mode, and simple IIC mode. Do not set both the CTSE and SSE bits to 1. If this setting is made, operation is the same as that when these bits are set to 0.

MSS bit (Master Slave Select)

The MSS bit selects master or slave operation in simple SPI mode. The functions of the TXDn and RXDn pins are reversed when this bit is set to 1, so that data is received through the TXDn pin and transmitted through the RXDn pin.

Set this bit to 0 in modes other than simple SPI mode.

CTSPEN bit (CTS External Pin Enable)

Select the terminals usage method when using the CTS and RTS functions.

MFF flag (Mode Fault Flag)

The MFF flag indicates mode fault errors. In a multi-master configuration, determine the mode fault error occurrence by reading this flag.

[Setting condition]

- When input on the SSn pin is low during master operation in simple SPI mode (SSE bit = 1 and MSS bit = 0).

[Clearing condition]

- On writing 0 to the bit after it is read as 1.

CKPOL bit (Clock Polarity Select)

The CKPOL bit selects the polarity of the clock signal output through the SCKn pin. See Figure 25.100 for details. Set the CKPOL bit to 0 in all modes other than simple SPI mode and clock synchronous mode.

CKPH bit (Clock Phase Select)

The CKPH bit selects the phase of the clock signal output through the SCKn pin. See Figure 25.100 for details. Set the CKPH bit to 0 in all modes other than simple SPI mode and clock synchronous mode.

25.2.29 FCR : FIFO Control Register

Base address: SCIn = 0x4011_8000 + 0x0100 × n (n = 0, 5, 9)
SCIk = 0x4011_8000 + 0x0100 × k (k = 3, 4)

Offset address: 0x14

Bit position:	15	14	13	12	11	10	9	8	7	6	5	4	3	2	1	0
Bit field:	RSTRG[3:0]				RTRG[3:0]				TTRG[3:0]				DRES	TFRST	RFRST	FM
Value after reset:	1	1	1	1	1	0	0	0	0	0	0	0	0	0	0	0

Bit	Symbol	Function	R/W
0	FM	FIFO Mode Select Valid only in asynchronous mode, including multi-processor mode, or clock synchronous mode. 0: Non-FIFO mode. Selects TDR/RDR or TDRHL/RDRHL for communication. 1: FIFO mode. Selects FTDRHL/FRDRHL for communication.	R/W*1
1	RFRST	Receive FIFO Data Register Reset Valid only when FCR.FM = 1. 0: Do not reset FRDRHL 1: Reset FRDRHL	R/W
2	TFRST	Transmit FIFO Data Register Reset Valid only when FCR.FM = 1. 0: Do not reset FTDRHL 1: Reset FTDRHL	R/W
3	DRES	Receive Data Ready Error Select Selects the interrupt requested when detecting receive data ready. 0: Receive data full interrupt (SCIn_RXI) 1: Receive error interrupt (SCIn_ERI)	R/W
7:4	TTRG[3:0]	Transmit FIFO Data Trigger Number Valid only in asynchronous mode, including multi-processor mode, or clock synchronous mode. The trigger number is specified in the TTRG[3:0] bits.	R/W

Bit	Symbol	Function	R/W
11:8	RTRG[3:0]	Receive FIFO Data Trigger Number Valid only in asynchronous mode, including multi-processor mode, or clock synchronous mode. The trigger number is specified in the RTRG[3:0] bits.	R/W
15:12	RSTRG[3:0]	RTS Output Active Trigger Number Select Valid only in asynchronous mode, including multi-processor mode, or clock synchronous mode, when FCR.FM = 1, SPMR.CTSE = 0, and SPMR.SSE = 0. The trigger number is specified in the RSTRG[3:0] bits.	R/W

Note 1. Writable only when TE = 0 and RE = 0.

FCR selects FIFO mode, resets FTDRHL and FRDRHL, selects the FIFO data trigger number for transmission or reception, and selects the RTS output active trigger number.

FM bit (FIFO Mode Select)

When the FM bit is set to 1, FTDRHL and FRDRHL are selected for communication. When the FM bit is set to 0, TDR and RDR, or TDRHL and RDRHL are selected for communication.

RFRST bit (Receive FIFO Data Register Reset)

When the RFRST bit is set to 1, the FRDRHL register is reset and the received data count resets to 0. When 1 is written to the RFRST bit, it clears to 0 after 1 PCLK.

TFRST bit (Transmit FIFO Data Register Reset)

When the TFRST bit is set to 1, the FTDRHL register is reset and the transmit data count resets to 0. When 1 is written to the TFRST bit, it clears to 0 after 1 PCLK.

DRES bit (Receive Data Ready Error Select)

When detecting a receive data ready error, the selection can be made from an SCIn_RXI interrupt request or an SCIn_ERI interrupt request.

TTRG[3:0] bits (Transmit FIFO Data Trigger Number)

The TDFE flag is set to 1 when the amount of transmit data in FTDRHL is equal to or less than the transmit triggering number specified in the TTRG[3:0] bits, and software can write data to FTDRHL. If SCR.TIE = 1, an SCIn_TXI interrupt request occurs.

RTRG[3:0] bits (Receive FIFO Data Trigger Number)

The RDF flag is set to 1 when the amount of receive data in FRDRHL is equal to or greater than the receive triggering number specified in the RTRG[3:0] bits, and software can read data from FRDRHL. If SCR.RIE = 1, an SCIn_RXI interrupt request occurs.

When RTRG[3:0] is 0, the RDF flag is not set even when the amount of data in the receive FIFO is equal to 0, and an SCIn_RXI interrupt does not occur.

RSTRG[3:0] bits (RTS Output Active Trigger Number Select)

When the amount of receive data stored in FRDRHL is equal to or greater than the receive triggering number specified in the RSTRG[3:0] bits, the RTS signal goes high.

When RSTRG[3:0] is 0, the RTS signal does not go high even when the amount of data in FRDRHL is equal to 0.

25.2.30 FDR : FIFO Data Count Register

Base address: SCIn = 0x4011_8000 + 0x0100 × n (n = 0, 5, 9)
SCIk = 0x4011_8000 + 0x0100 × k (k = 3, 4)

Offset address: 0x16

Bit position:	15	14	13	12	11	10	9	8	7	6	5	4	3	2	1	0
Bit field:	—	—	—	T[4:0]					—	—	—	R[4:0]				
Value after reset:	0	0	0	0	0	0	0	0	0	0	0	0	0	0	0	0

Bit	Symbol	Function	R/W
4:0	R[4:0]	Receive FIFO Data Count Valid only in asynchronous mode, including multi-processor mode, or clock synchronous mode, when FCR.FM = 1. Indicates the amount of receive data stored in FRDRHL.	R
7:5	—	These bits are read as 0.	R
12:8	T[4:0]	Transmit FIFO Data Count Valid only in asynchronous mode, including multi-processor mode, or clock synchronous mode, when FCR.FM = 1. Indicates the amount of non-transmitted data stored in FTDRHL.	R
15:13	—	These bits are read as 0.	R

The FDR register indicates the amount of data stored in FRDRHL and FTDRHL.

R[4:0] bits (Receive FIFO Data Count)

The R[4:0] bits indicate the amount of receive data stored in FRDRHL. 0x00 means no receive data, and 0x10 means that the maximum received data is stored in FRDRHL.

T[4:0] bits (Transmit FIFO Data Count)

The T[4:0] bits indicate the amount of non-transmitted data stored in FTDRHL. 0x00 means no transmit data, and 0x10 means that all (maximum amount) of the data to be transmitted is stored in FTDRHL.

25.2.31 LSR : Line Status Register

Base address: SCIn = 0x4011_8000 + 0x0100 × n (n = 0, 5, 9)
SCIk = 0x4011_8000 + 0x0100 × k (k = 3, 4)

Offset address: 0x18

Bit position:	15	14	13	12	11	10	9	8	7	6	5	4	3	2	1	0
Bit field:	—	—	—	PNUM[4:0]					—	FNUM[4:0]					—	ORER
Value after reset:	0	0	0	0	0	0	0	0	0	0	0	0	0	0	0	0

Bit	Symbol	Function	R/W
0	ORER	Overrun Error Flag Valid only in asynchronous mode, including multi-processor mode, or clock synchronous mode, and when FIFO is selected. 0: No overrun error occurred 1: Overrun error occurred	R*1
1	—	This bit is read as 0.	R
6:2	FNUM[4:0]	Framing Error Count Indicates the amount of data with a framing error in the receive data stored in FRDRHL.	R
7	—	This bit is read as 0.	R
12:8	PNUM[4:0]	Parity Error Count Indicates the amount of data with a parity error in the receive data stored in FRDRHL.	R
15:13	—	These bits are read as 0.	R

Note 1. Write 0 to SSR_FIFO.ORER to clear the flag.

The LSR register indicates the receive error status.

ORER flag (Overrun Error Flag)

The ORER flag reflects the value in SSR_FIFO.ORER.

FNUM[4:0] bits (Framing Error Count)

The FNUM[4:0] value indicates the amount of data with a framing error stored in the FRDRHL register.

PNUM[4:0] bits (Parity Error Count)

The PNUM[4:0] value indicates the amount of data with a parity error stored in the FRDRHL register.

25.2.32 CDR : Compare Match Data Register

Base address: SCIn = 0x4011_8000 + 0x0100 × n (n = 0, 5, 9)
SCIk = 0x4011_8000 + 0x0100 × k (k = 3, 4)

Offset address: 0x1A

Bit position:	15	14	13	12	11	10	9	8	7	6	5	4	3	2	1	0
Bit field:	—	—	—	—	—	—	—	CMPD[8:0]								
Value after reset:	0	0	0	0	0	0	0	0	0	0	0	0	0	0	0	0

Bit	Symbol	Function	R/W
8:0	CMPD[8:0]	Compare Match Data Holds compare data pattern for address match wakeup function.	R/W
15:9	—	These bits are read as 0. The write value should be 0.	R/W

The CDR register sets the compare data for the address match function.

CMPD[8:0] bits (Compare Match Data)

The CMPD[8:0] bits set the data to be compared to receive data for the address match function, when the address match function is enabled (DCCR.DCME = 1).

Three bit lengths are available:

- CMPD[6:0] with 7-bit length
- CMPD[7:0] with 8-bit length
- CMPD[8:0] with 9-bit length

25.2.33 DCCR : Data Compare Match Control Register

Base address: SCIn = 0x4011_8000 + 0x0100 × n (n = 0, 5, 9)
SCIk = 0x4011_8000 + 0x0100 × k (k = 3, 4)

Offset address: 0x13

Bit position:	7	6	5	4	3	2	1	0
Bit field:	DCME	IDSEL	—	DFER	DPER	—	—	DCMF
Value after reset:	0	1	0	0	0	0	0	0

Bit	Symbol	Function	R/W
0	DCMF	Data Compare Match Flag 0: Not matched 1: Matched	R/(W)*1
2:1	—	These bits are read as 0. The write value should be 0.	R/W
3	DPER	Data Compare Match Parity Error Flag 0: No parity error occurred 1: Parity error occurred	R/(W)*1
4	DFER	Data Compare Match Framing Error Flag 0: No framing error occurred 1: Framing error occurred	R/(W)*1
5	—	This bit is read as 0. The write value should be 0.	R/W

Bit	Symbol	Function	R/W
6	IDSEL	ID Frame Select Valid only in asynchronous mode, including multi-processor mode. 0: Always compare data regardless of the MPB bit value 1: Only compare data when MPB bit = 1 (ID frame)	R/W
7	DCME	Data Compare Match Enable Valid only in asynchronous mode, including multi-processor mode. 0: Disable address match function 1: Enable address match function	R/W

Note 1. Only 0 can be written, to clear the flag after reading 1.

The DCCR register controls the address match function.

DCMF flag (Data Compare Match Flag)

The DCMF flag indicates that the SCI detected a receive data match with the comparison data (CDR.CMPD).

[Setting condition]

- On match of the comparison data (CDR.CMPD) with the receive data when DCCR.DCME = 1.

[Clearing condition]

- When 0 is written after 1 is read from DCMF.

Clearing the SCR.RE bit to 0 does not affect the DCMF flag, which retains its previous value.

DPER flag (Data Compare Match Parity Error Flag)

The DPER flag indicates that a parity error occurred on address match detection (receive data match detection).

[Setting condition]

- When a parity error is detected in a frame in which an address match is detected.

[Clearing conditions]

- When 0 is written after 1 is read from DPER.

When the SCR.RE bit is set to 0 (serial reception is disabled), the DPER flag is not affected and retains its previous value.

DFER flag (Data Compare Match Framing Error Flag)

The DFER flag indicates that a framing error occurred on address match detection (receive data match detection).

[Setting conditions]

- When a stop bit of a frame in which an address match is detected is 0.

  When in 2-stop-bit mode, only the first bit of the stop bits is checked for a value of 1 (the second stop bit is not checked).

[Clearing conditions]

- When 0 is written after 1 is read from DFER.

When the SCR.RE bit is set to 0 (serial reception is disabled), the DFER flag is not affected and retains its previous value.

IDSEL bit (ID Frame Select)

The IDSEL bit selects whether to compare data regardless of the MPB bit value or to compare data only when MPB = 1 (ID frame), when the address match function is enabled.

DCME bit (Data Compare Match Enable)

The DCME bit enables or disables the address match function (data compare match function).

If the SCI detects a match to the comparison data (CDR.CMPD) with the receive data, the DCME bit clears automatically, after which SCI operation mode is in normal receive mode. See section 25.3.6. Address Match (Receive Data Match Detection) Function.

The write value must be 0 for all modes other than asynchronous mode.

25.2.34 SPTR : Serial Port Register

Base address: SCIn = 0x4011_8000 + 0x0100 × n (n = 0, 5, 9)
SCIk = 0x4011_8000 + 0x0100 × k (k = 3, 4)

Offset address: 0x1C

Bit position:	7	6	5	4	3	2	1	0
Bit field:	ATEN	ASEN	TINV	RINV	—	SPB2IO	SPB2DT	RXDMON
Value after reset:	0	0	0	0	0	0	1	1

Bit	Symbol	Function	R/W
0	RXDMON	Serial Input Data Monitor Indicates the state of the RXDn pin. 0: When RINV = 0, RXDn terminal is the low level. When RINV = 1, RXDn terminal is the high level. 1: When RINV = 0, RXDn terminal is the high level. When RINV = 1, RXDn terminal is the low level.	R
1	SPB2DT	Serial Port Break Data Select Selects the output level of the TXDn pin when SCR.TE = 0. 0: When TINV = 0, low level is output in TXDn terminal. When TINV = 1, high level is output in TXDn terminal. 1: When TINV = 0, high level is output in TXDn terminal. When TINV = 1, low level is output in TXDn terminal.	R/W
2	SPB2IO	Serial Port Break I/O*1 Selects whether the value of SPB2DT is output to TXDn pin. 0: Do not output value of SPB2DT bit on TXDn pin 1: Output value of SPB2DT bit on TXDn pin	R/W
3	—	These bits are read as 0. The write value should be 0.	R/W
4	RINV	RXD Invert Bit 0: Received data from RXDn is not inverted and input*2 1: Received data from RXDn is inverted and input	R/W*3
5	TINV	TXD Invert Bit 0: Transmit data is not inverted and output to TXDn*2 1: Transmit data is inverted and output to TXDn	R/W*3
6	ASEN	Adjust Receive Sampling Timing Enable This bit enables in asynchronous mode using internal clock. This function can adjust the receive sampling timing. In asynchronous mode using internal clock, see section 25.3.10. The function of adjust receive sampling timing (Asynchronous Mode) for details. 0: Adjust sampling timing disable 1: Adjust sampling timing enable	R/W*3
7	ATEN	Adjust Transmit Timing Enable This bit enables in asynchronous mode using internal clock. This function can adjust the transmit edge of TXDn waveform. See section 25.3.11. The function of adjust transmit timing (Asynchronous Mode) for details. 0: Adjust transmit timing disable 1: Adjust transmit timing enable	R/W*3

Note 1. Please use this bit in asynchronous mode and manchester mode. Movement by other mode isn't guaranteed.
Note 2. RINV/TINV should be set to 0 in smart card interface mode and simple I2C mode.
Note 3. Change the value of these bits only at SCR.TE = SCR.RE = 0.

The SPTR register provides confirmation of the serial reception pin (RXDn pin) status and sets the transmission and receive pin status.

Additionally, the SPTR register has enable bits for adjusting functions of receive sampling timing and transmit timing.

The TXDn pin status is determined by the combination of SCR.TE, SPTR.SPB2IO, and SPTR.SPB2DT settings, as shown in Table 25.25.

The data of RDR is controlled by RINV and SCMR.SINV. The data from TXDn terminal is controlled by TINV and SCMR.SINV. The control by RINV/TINV are done to communication terminals (RXDn/TXDn), so they can control not only data-bits but also other bits (start bit, stop bit, parity bit). For details, see Figure 25.6.

Table 25.25 TXDn pin status

Value of SCR.TE	Value of SPTR.SPB2IO	Value of SPTR.SPB2DT	TXDn pin status
0	0	—	Hi-Z (initial value)
0	1	0	Low level output
0	1	1	High level output
1	—	—	Serial transmit data is output

Note: —: Don't care.
Note: Use the SPTR register in asynchronous mode only. Using this register in any other mode is not guaranteed.

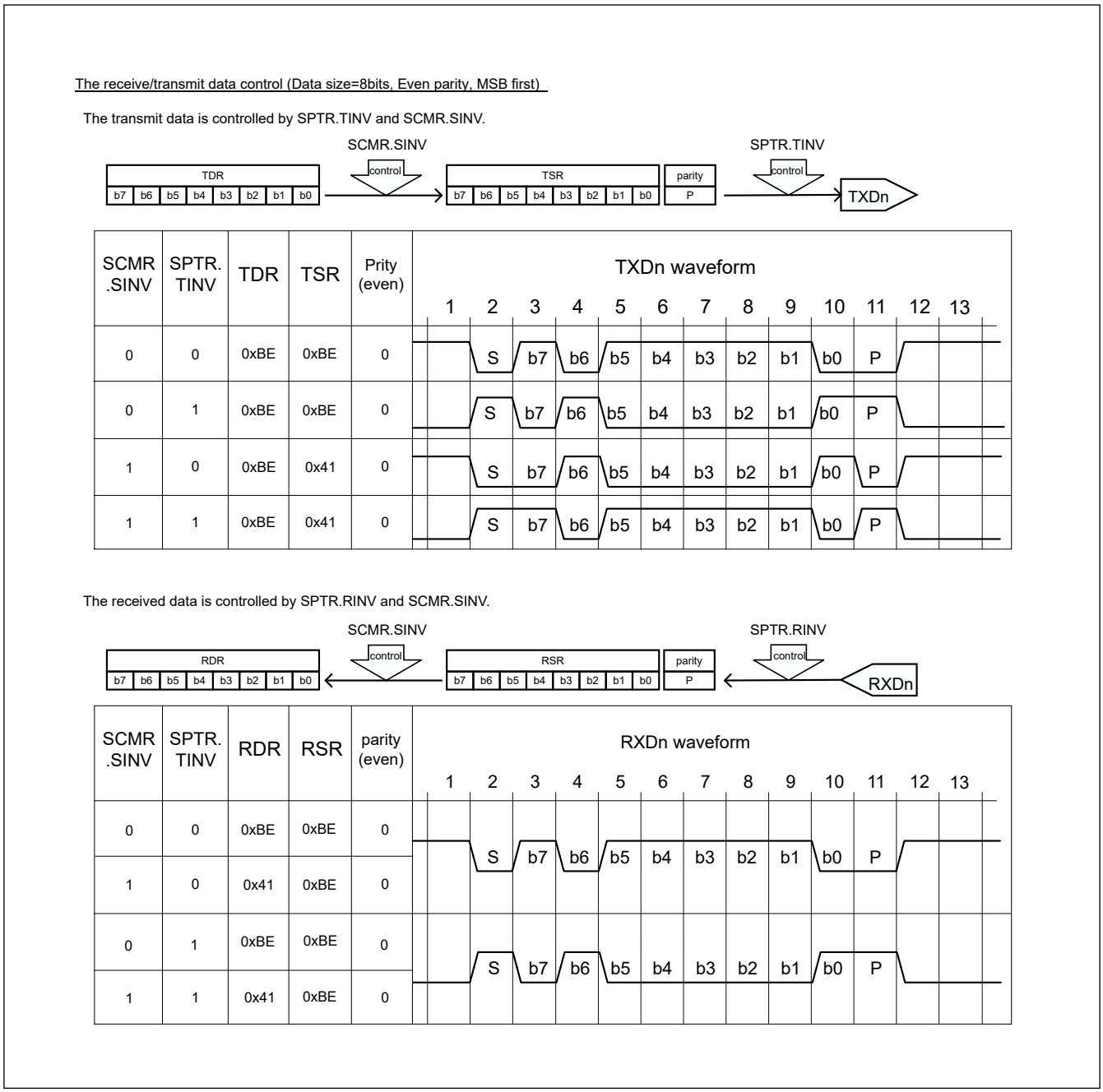

Figure 25.6 Example of the receive/transmit data control

25.2.35 ACTR : Adjustment Communication Timing Register

Base address: SCIn = 0x4011_8000 + 0x0100 × n (n = 0, 5, 9)
SCIk = 0x4011_8000 + 0x0100 × k (k = 3, 4)

Offset address: 0x1D

Bit position:	7	6	5	4	3	2	1	0
Bit field:	AET	ATT[2:0]			AJD	AST[2:0]		
Value after reset:	0	0	0	0	0	0	0	0

Bit	Symbol	Function	R/W
2:0	AST	Adjustment Value for Receive Sampling Timing The sampling timing of RXD terminal is adjusted from the middle of bit by the following formula. Adjustment sampling timing = base clock × the setting value of AST[2:0]. This bit is valid only at SPTR.ASEN = 1. This setting timing is limited by setting the base clock cycles. For details, see section 25.3.10. The function of adjust receive sampling timing (Asynchronous Mode).	R/W*1
3	AJD	Adjustment Direction for Receive Sampling Timing Adjustment direction for RXD receive sampling timing is determined by this bit. 0: The sampling timing is adjusted backward to the middle of bit. 1: The sampling timing is adjusted forward to the middle of bit. This bit is valid only at SPTR.ASEN = 1. For details, see section 25.3.10. The function of adjust receive sampling timing (Asynchronous Mode).	R/W*1
6:4	ATT	Adjustment Value for Transmit Timing The selected edge timing of TXD is adjusted by the following formula. Adjustment edge timing = base clock × the setting value of ATT[2:0]. This bit is valid only at SPTR.ATEN = 1. This setting timing is limited by setting the base clock cycles. For details, see section 25.3.11. The function of adjust transmit timing (Asynchronous Mode).	R/W*2
7	AET	Adjustment Edge for Transmit Timing The adjustable edge is set by this bit. When SPTR.TINV is 0: 0: Adjust the rising edge timing 1: Adjust the falling edge timing When SPTR.TINV is 1: 0: Adjust the falling edge timing 1: Adjust the rising edge timing This bit is valid only at SPTR.ATEN = 1. For details, see section 25.3.11. The function of adjust transmit timing (Asynchronous Mode).	R/W*2

Note 1. Write this bit only when SPTR.ASEN = 0.
Note 2. Write this bit only when SPTR.ATEN = 0.

This register controls adjustment of receive sampling timing and transmit timing. This register is valid only when asynchronous mode using internal clock.

For details of adjustment of receive sampling timing by this register, see section 25.3.10. The function of adjust receive sampling timing (Asynchronous Mode).

For details of adjustment transmit timing by this register, see section 25.3.11. The function of adjust transmit timing (Asynchronous Mode).

Note: Details and a timing diagram of the IP operation (except section 25.1. Overview, section 25.2. Register Descriptions, section 25.3.10. The function of adjust receive sampling timing (Asynchronous Mode) and section 25.3.11. The function of adjust transmit timing (Asynchronous Mode)) are described by the condition that the receive sampling timing and transmit timing adjustments are disabled (SPTR.ASEN = 0, SPTR.ATEN = 0).

25.2.36 MMR : Manchester Mode Register

Base address: SCIk = 0x4011_8000 + 0x0100 × k (k = 3, 4)

Offset address: 0x20

Bit position:	7	6	5	4	3	2	1	0
Bit field:	MANEN	SBSEL	SYNSEL	SYNVAL	—	ERTEN	TMPOL	RMPOL
Value after reset:	0	0	0	0	0	0	0	0

Bit	Symbol	Function	R/W
0	RMPOL	Polarity of Received Manchester Code Sets the polarity of the received Manchester code 0: Logic 0 is coded as a zero-to-one transition in Manchester code Logic 1 is coded as a one-to-zero transition in Manchester code 1: Logic 0 is coded as a one-to-zero transition in Manchester code Logic 1 is coded as a zero-to-one transition in Manchester code	R/W*1
1	TMPOL	Polarity of Transmit Manchester Code Sets the polarity of the transmit Manchester code 0: Logic 0 is coded as a zero-to-one transition in Manchester code Logic 1 is coded as a one-to-zero transition in Manchester code 1: Logic 0 is coded as a one-to-zero transition in Manchester code Logic 1 is coded as a zero-to-one transition in Manchester code	R/W*1
2	ERTEN	Manchester Edge Retiming Enable Sets the receive retiming function 0: Disables the receive retiming function 1: Enables the receive retiming function	R/W*1
3	—	This bit is read as 0. The write value should be 0.	R
4	SYNVAL	SYNC Value Setting Sets the SYNC type of the start bit in the Manchester code When the start bit area consists of one bit (SBSEL = 0) ● When transmitting 0: The start bit is added as a zero-to-one transition 1: The start bit is added as a one-to-zero transition ● When receiving 0: Only when the start bit is a zero-to-one transition, the data is received. The other cases are determined as an error. 1: Only when the start bit is a one-to-zero transition, the data is received. The other cases are determined as an error. When the start bit area consists of three bits. (SBSEL = 1) ● When transmitting 0: The start bits are added as a zero-to-one transition (DATA SYNC) 1: The start bits are coded as a one-to-zero transition (COMMAND SYNC) ● When receiving When the start bit area consists of three bits, data is received regardless of the value of this bit.	R/W*1
5	SYNSEL	SYNC Select 0: The start bit pattern is set with the SYNVAL bit 1: The start bit pattern is set with the TSYNC bit	R/W*1
6	SBSEL	Start Bit Select 0: The start bit area consists of one bit 1: The start bit area consists of three bits (COMMAND SYNC or DATA SYNC)	R/W*1
7	MANEN	Manchester Mode Enable Sets the Manchester mode 0: Disables the Manchester mode 1: Enables the Manchester mode	R/W*1

Note: Bits [6:0] in this register are valid only when the Manchester mode is enabled (MANEN = 1) in bit 7.

Note 1. Writing to these bits is only possible when the RE and TE bits in SCR are 0 (both serial transmission and reception are disabled).

This register is used to enable or disable the Manchester mode, set the start bit area, and set the logic polarity.

RMPOL bit (Polarity of Received Manchester Code)

This bit sets the polarity of the received Manchester code. For details, see section 25.5.7. Serial Data Reception in Manchester Mode.

TMPOL bit (Polarity of Transmit Manchester Code)

This bit sets the polarity of the transmit Manchester code. For details, see section 25.5.6. Serial data transmission in Manchester mode.

ERTEN bit (Manchester Edge Retiming Enable)

This bit sets the receive retiming function in Manchester mode.

For information on the receive retiming function, see section 25.5.9. Receive Retiming.

SYNVAL bit (SYNC Value Setting)

This bit is valid when the SYNSEL bit of this register is set to 0.

The SYNC type can be set by combining this bit and the SBSEL bit.

For the start bit area determined by the combination of this bit and the SBSEL bit, see Figure 25.53 and Figure 25.54.

SYNSEL bit (SYNC Select)

This bit is valid when the SBSEL bit of this register is set to 1. This bit determines the destination to be referred to for setting the SYNC type of the start bit area added to Manchester frames.

When this bit is set to 0, the SYNVAL bit of this register is referred to.

When this bit is set to 1, the TSYNC bit in the TDRH register is referred to.

For detail, see the bit table in section 25.2.36. MMR : Manchester Mode Register.

SBSEL bit (Start Bit Select)

This bit sets the start bit area in Manchester frames.

When this bit is set to 1, the start bit area added to each frame consists of three bits, and the SYNSEL and SYNVAL bits in this register are valid.

When this bit is set to 0, the start bit area added to each frame consists of one bit.

MANEN bit (Manchester Mode Enable)

This bit sets the Manchester mode.

When this bit is set to 0, the Manchester mode is disabled.

When this bit is set to 1, the Manchester mode is enabled.

25.2.37 TMPR : Transmit Manchester Preface Setting Register

Base address: SCIk = 0x4011_8000 + 0x0100 × k (k = 3, 4)

Offset address: 0x22

Bit position:	7	6	5	4	3	2	1	0
Bit field:	—	—	TPPAT[1:0]		TPLEN[3:0]			
Value after reset:	0	0	0	0	0	0	0	0

Bit	Symbol	Function	R/W
3:0	TPLEN	Transmit Preface Length Set the preface length of the transmit data in Manchester mode 0x0: Disables the transmit preface generation Others: Transmit preface length (bit length)	R/W*1

Bit	Symbol	Function	R/W
5:4	TPPAT	Transmit Preface Pattern Set the preface pattern of the transmit data 0 0: All zeros 0 1: Zero one 1 0: One zero 1 1: All ones	R/W*1
7:6	—	The read value is undefined. The write value should be 0.	R

Note: This register is valid only when the Manchester mode is enabled (MMR.MANEN = 1).
Note 1. Writing to these bits is only possible when the RE and TE bits in SCR are 0 (both serial transmission and reception are disabled).

This register is used to set the preface length and preface pattern of the transmit data in Manchester mode.

TPLEN bit (Transmit Preface Length)

These bits set the preface bit length of the transmit data in Manchester mode.

The settable range is 0x0 to 0xF (0 to 15). The setting of 0x0 disables the transmit preface, which is not added.

TPPAT bit (Transmit Preface Pattern)

These bits set one of the four preface patterns in Manchester mode.

When these bits are set to 00b, the preface area is set to all zeros.

When these bits are set to 01b, the preface area is set to the zero-one-zero-one pattern.

When these bits are set to 10b, the preface area is set to the one-zero-one-zero pattern.

When these bits are set to 11b, the preface area is set to all ones.

Note: For the transmit and receive data when the TPPAT bits are set, see Figure 25.52.

25.2.38 RMPR : Receive Manchester Preface Setting Register

Base address: SCIk = 0x4011_8000 + 0x0100 × k (k = 3, 4)

Offset address: 0x23

Bit position:	7	6	5	4	3	2	1	0
Bit field:	—	—	RPPAT[1:0]		RPLEN[3:0]			
Value after reset:	0	0	0	0	0	0	0	0

Bit	Symbol	Function	R/W
3:0	RPLEN	Receive Preface Length Set the preface length in received frames when Manchester mode is enabled 0: Disables the receive preface generation Others: Receive preface length (bit length)	R/W*1
5:4	RPPAT	Receive Preface Pattern Set the preface pattern of received frames 0 0: All zeros 0 1: Zero one 1 0: One zero 1 1: All ones	R/W*1
7:6	—	These bits are read as 0. The write value should be 0.	R

Note: This register is valid only when the Manchester mode is enabled (MMR.MANEN = 1).
Note 1. Writing to these bits is only possible when the RE and TE bits in SCR are 0 (both serial transmission and reception are disabled).

This register is used to set the preface length and preface pattern of the received frames in Manchester mode.

RPLEN bit (Receive Preface Length)

These bits set the preface bit length of the received frames in Manchester mode.

The settable range is 0x0 to 0xF (0 to 15). The setting 0x0 disables the receive preface, which is not added. When 0x1 to 0xF is set, the set value is handled as the receive preface bit length.

RPPAT bit (Receive Preface Pattern)

These bits set one of the four preface patterns in Manchester mode.

When these bits are set to 00b, the preface area is handled as all zeros.

When these bits are set to 01b, the preface area is handled as the zero-one-zero-one pattern.

When these bits are set to 10b, the preface area is handled as the one-zero-one-zero pattern.

When these bits are set to 11b, the preface area is handled as all ones.

Note: For the transmit and receive data when the RPPAT bits are set, see Figure 25.52.

25.2.39 MESR : Manchester Extended Error Status Register

Base address: SCIk = 0x4011_8000 + 0x0100 × k (k = 3, 4)

Offset address: 0x24

Bit position:	7	6	5	4	3	2	1	0
Bit field:	—	—	—	—	—	SBER	SYER	PFER
Value after reset:	0	0	0	0	0	0	0	0

Bit	Symbol	Function	R/W
0	PFER	Preface Error Flag This bit is set when a preface error (pattern mismatch) is detected 0: No preface error detected 1: Preface error detected	R/(W)*1
1	SYER	SYNC Error Flag This bit is set when no edge is detected in the adjustable range during receive retiming 0: No receive SYNC error detected 1: Receive SYNC error detected	R/(W)*1
2	SBER	Start Bit Error Flag This bit is set when a pattern mismatch in the start bit area is detected 0: No start bit error detected 1: Start bit error detected	R/(W)*1
7:3	—	These bits are read as 0. The write value should be 0.	R

Note: This register is valid only when the Manchester mode is enabled (MMR.MANEN = 1).
Note 1. Only 0 can be written to this bit, to clear the flag. To clear the flag, confirm that the flag is 1 before setting it to 0.

This register indicates an error status when receiving frames in Manchester mode.

A preface error, receive SYNC error or start bit error was detected.

PFER bit (Preface Error Flag)

This bit indicates that a preface error was detected when receiving frames in Manchester mode.

[Setting condition]

- When detecting a preface error when receiving frames in Manchester mode
  The following operations are performed when a preface error occurs.
  When MECR.PFEREN = 1
  The received data is not transferred to the RDR register and no RXI interrupt request occurs. Instead, an ERI interrupt request occurs. Note that when the PFER flag is being set to 1, the subsequently received data is not transferred to the RDR register.
  When MECR.PFEREN = 0
  The received data is transferred to the RDR register and an RXI interrupt request occurs. An ERI interrupt request is not generated. The subsequent receive operations are not affected even with the PFER flag being set to 1.

[Clearing condition]

- When 0 is written to the bit after it was read as 1

Even if the SCR.RE bit is cleared, the PFER flag is not affected, and the previous state is retained.

SYER bit (SYNC Error Flag)

This bit indicates that a receive SYNC error was detected when receiving frames in Manchester mode with MMR.ERTEN = 1 (Manchester edge retiming enabled).

[Setting condition]

- When detecting a receive SYNC error when receiving frames in Manchester mode
  The following operations are performed when a receive SYNC error occurs.
  When MECR.SYEREN = 1
  Although the received data is transferred to the RDR register, no RXI interrupt request occurs. Instead, an ERI interrupt request occurs. Note that when the SYER flag is being set to 1, the subsequently received data is not transferred to the RDR register.
  When MECR.SYEREN = 0
  The received data is transferred to the RDR register and an RXI interrupt request occurs. An ERI interrupt request is not generated. The subsequent receive operations are not affected even with the SYER flag being set to 1.

[Clearing condition]

- When 0 is written to the bit after it was read as 1

Even if the SCR.RE bit is cleared, the SYER flag is not affected, and the previous state is retained.

SBER bit (Start Bit Error Flag)

This bit indicates that a start bit error was detected when receiving frames in Manchester mode.

[Setting condition]

- When detecting a start bit error when receiving frames in Manchester mode
  The following operations are performed when a start bit error occurs.
  When MECR.SBEREN = 1
  The received data is not transferred to the RDR register and no RXI interrupt request occurs. Instead, an ERI interrupt request occurs. Note that when the SBER flag is being set to 1, the subsequently received data is not transferred to the RDR register.
  When MECR.SBEREN = 0
  The received data is transferred to the RDR register and an RXI interrupt request occurs. An ERI interrupt request is not generated. The subsequent receive operations are not affected even with the SBER flag being set to 1.

[Clearing condition]

- When 0 is written to the bit after it was read as 1

Even if the SCR.RE bit is cleared, the SBER flag is not affected, and the previous state is retained.

25.2.40 MECR : Manchester Extended Error Control Register

Base address: SCIk = 0x4011_8000 + 0x0100 × k (k = 3, 4)

Offset address: 0x25

Bit position:	7	6	5	4	3	2	1	0
Bit field:	—	—	—	—	—	SBER EN	SYER EN	PFER EN
Value after reset:	0	0	0	0	0	0	0	0

Bit	Symbol	Function	R/W
0	PFEREN	Preface Error Enable Specifies whether to handle a preface error as an interrupt source 0: Does not handle a preface error as an interrupt source 1: Handles a preface error as an interrupt source	R/W

Bit	Symbol	Function	R/W
1	SYEREN	Receive SYNC Error Enable Specifies whether to handle a receive SYNC error as an interrupt source 0: Does not handle a receive SYNC error as an interrupt source 1: Handles a receive SYNC error as an interrupt source	R/W
2	SBEREN	Start Bit Error Enable Specifies whether to handle a start bit error as an interrupt source 0: Does not handle a start bit error as an interrupt source 1: Handles a start bit error as an interrupt source	R/W
7:3	—	These bits are read as 0. The write value should be 0.	R

Note: This register is valid only when the Manchester mode is enabled (MMR.MANEN = 1).

This register is used to specify whether to handle a preface error, receive SYNC error, or a start bit error as an interrupt source in Manchester mode. If those errors are handled as interrupt sources, interrupt requests and event requests are generated at the occurrence of each error, and the next reception is not performed until the corresponding error flag is cleared.

Set this register when MMR.MANEN = 0. However, do not change this register during communication.

PFEREN bit (Preface Error Enable)

This bit specifies whether to handle a preface error as an interrupt source.

When it is set to 0, a preface error is not handled as an interrupt source. When it is set to 1, a preface error is handled as an interrupt source.

SYEREN bit (Receive SYNC Error Enable)

This bit specifies whether to handle a receive SYNC error as an interrupt source.

When it is set to 0, a receive SYNC error is not handled as an interrupt source. When it is set to 1, a receive SYNC error is handled as an interrupt source.

SBEREN bit (Start Bit Error Enable)

This bit specifies whether to handle a start bit error as an interrupt source.

When it is set to 0, a start bit error is not handled as an interrupt source. When it is set to 1, a start bit error is handled as an interrupt source.

25.2.41 ESMER : Simple LIN Mode Enable Register

Base address: SCI1 = 0x4011_8100

Offset address: 0x20

Bit position:	7	6	5	4	3	2	1	0
Bit field:	—	—	—	—	—	—	—	ESME
Value after reset:	0	0	0	0	0	0	0	0

Bit	Symbol	Function	R/W
0	ESME	Simple LIN Mode Enable 0: The Simple LIN mode is disabled 1: The Simple LIN mode is enabled	R/W
7:1	—	These bits are read as 0. The write value should be 0.	R/W

ESME bit (Simple LIN Mode Enable)

When the ESME bit is 1, the facilities of the Simple LIN mode control section are enabled.

When the ESME bit is 0, the Simple LIN mode control section is initialized.

Table 25.26 Settings of the ESME bit and timer operation mode

ESME bit	Timer mode	Break field low width determination mode	Break field low width output mode
0	Available*1	Not available	Not available
1	Available	Available	Available

Note 1. Operation is only possible with PCLK selected.

25.2.42 CR0 : Control Register 0

Base address: SCI1 = 0x4011_8100

Offset address: 0x21

Bit position:	7	6	5	4	3	2	1	0
Bit field:	—	—	—	—	BRME	RXDSF	SFSF	—
Value after reset:	0	0	0	0	0	0	0	0

Bit	Symbol	Function	R/W
0	—	This bit is read as 0. The write value should be 0.	R/W
1	SFSF	Start Frame Status Flag 0: Start frame detection function is disabled 1: Start frame detection function is enabled	R
2	RXDSF	RXDXn Input Status Flag 0: RXDXn input is enabled 1: RXDXn input is disabled	R
3	BRME	Bit Rate Measurement Enable 0: Measurement of bit rate is disabled 1: Measurement of bit rate is enabled	R/W
7:4	—	These bits are read as 0. The write value should be 0.	R/W

25.2.43 CR1 : Control Register 1

Base address: SCI1 = 0x4011_8100

Offset address: 0x22

Bit position:	7	6	5	4	3	2	1	0
Bit field:	PIBS[2:0]			PIBE	CF1DS[1:0]		CF0RE	BFE
Value after reset:	0	0	0	0	0	0	0	0

Bit	Symbol	Function	R/W
0	BFE	Break Field Enable 0: Break Field detection is disabled 1: Break Field detection is enabled	R/W
1	CF0RE	Control Field 0 Reception Enable 0: Reception of Control Field 0 is disabled 1: Reception of Control Field 0 is enabled	R/W
3:2	CF1DS[1:0]	Control Field 1 Data Register Select 0 0: Selects comparison with the value in PCF1DR 0 1: Selects comparison with the value in SCF1DR 1 0: Selects comparison with the values in PCF1DR and SCF1DR 1 1: Setting prohibited	R/W
4	PIBE	Priority Interrupt Bit Enable 0: The priority interrupt bit is disabled 1: The priority interrupt bit is enabled	R/W

Bit	Symbol	Function	R/W
7:5	PIBS[2:0]	Priority Interrupt Bit Select 0 0 0: 0th bit of Control Field 1 0 0 1: 1st bit of Control Field 1 0 1 0: 2nd bit of Control Field 1 0 1 1: 3rd bit of Control Field 1 1 0 0: 4th bit of Control Field 1 1 0 1: 5th bit of Control Field 1 1 1 0: 6th bit of Control Field 1 1 1 1: 7th bit of Control Field 1	R/W

25.2.44 CR2 : Control Register 2

Base address: SCI1 = 0x4011_8100

Offset address: 0x23

Bit position:	7	6	5	4	3	2	1	0
Bit field:	RTS[1:0]		BCCS[1:0]		—	DFCS[2:0]		
Value after reset:	0	0	0	0	0	0	0	0

Bit	Symbol	Function	R/W
2:0	DFCS[2:0]	RXDXn Signal Digital Filter Clock Select 0 0 0: Filter is disabled 0 0 1: Filter clock is SCI base clock*1 *2 0 1 0: Filter clock is PCLK/8 0 1 1: Filter clock is PCLK/16 1 0 0: Filter clock is PCLK/32 1 0 1: Filter clock is PCLK/64 1 1 0: Filter clock is PCLK/128 1 1 1: Setting prohibited	R/W
3	—	This bit is read as 0. The write value should be 0.	R/W
5:4	BCCS[1:0]	Bus Collision Detection Clock Select ● When SEMR.BGDM = 0, or SEMR.BGDM = 1 and SMR.CKS[1:0] = a value other than 00b 0 0: SCI base clock 0 1: SCI base clock frequency divided by 2 1 0: SCI base clock frequency divided by 4 1 1: Setting prohibited ● When SEMR.BGDM = 1 and SMR.CKS[1:0] = 00b 0 0: SCI base clock frequency divided by 2 0 1: SCI base clock frequency divided by 4 1 0: Setting prohibited 1 1: Setting prohibited	R/W
7:6	RTS[1:0]	RXDXn Reception Sampling Timing Select ● When SCIn.SEMR.ABCS = 0 0 0: Rising edge of the 8th cycle of SCI base clock 0 1: Rising edge of the 10th cycle of SCI base clock 1 0: Rising edge of the 12th cycle of SCI base clock 1 1: Rising edge of the 14th cycle of SCI base clock ● When SCIn.SEMR.ABCS = 1 0 0: Rising edge of the 4th cycle of SCI base clock 0 1: Rising edge of the 5th cycle of SCI base clock 1 0: Rising edge of the 6th cycle of SCI base clock 1 1: Rising edge of the 7th cycle of SCI base clock	R/W

Note: The period of the SCI base clock is 1/16 of a single bit period when the SCIn.SEMR.ABCS is 0, and 1/8 of a single bit period when the SCIn.SEMR.ABCS is 1.

Note 1. To use the SCI base clock, set the SCIn.SCR.TE or SCIn.SCR.RE bit to 1.

Note 2. The SCI base clock divided by 2 is the filter clock when the SEMR.BGDM bit is 1 and the SMR.CKS[1:0] bits are 00b.

25.2.45 CR3 : Control Register 3

Base address: SCI1 = 0x4011_8100

Offset address: 0x24

Bit position:	7	6	5	4	3	2	1	0
Bit field:	—	—	—	—	—	—	—	SDST
Value after reset:	0	0	0	0	0	0	0	0

Bit	Symbol	Function	R/W
0	SDST	Start Frame Detection Start 0: Detection of start frame is not performed 1: Detection of start frame is performed	R/W
7:1	—	These bits are read as 0. The write value should be 0.	R/W

SDST bit (Start Frame Detection Start)

Detection of a start frame begins when this bit is set to 1. The bit is read as 0.

25.2.46 PCR : Port Control Register

Base address: SCI1 = 0x4011_8100

Offset address: 0x25

Bit position:	7	6	5	4	3	2	1	0
Bit field:	—	—	—	SHARPS	—	—	RXDXPS	TXDXPS
Value after reset:	0	0	0	0	0	0	0	0

Bit	Symbol	Function	R/W
0	TXDXPS	TXDXn Signal Polarity Select 0: The polarity of TXDXn signal is not inverted for output 1: The polarity of TXDXn signal is inverted for output	R/W
1	RXDXPS	RXDXn Signal Polarity Select 0: The polarity of RXDXn signal is not inverted for input 1: The polarity of RXDXn signal is inverted for input	R/W
3:2	—	These bits are read as 0. The write value should be 0.	R/W
4	SHARPS	TXDXn/RXDXn Pin Multiplexing Select 0: The TXDXn and RXDXn pins are independent 1: The TXDXn and RXDXn signals are multiplexed on the same pin	R/W
7:5	—	These bits are read as 0. The write value should be 0.	R/W

SHARPS bit (TXDXn/RXDXn Pin Multiplexing Select)

When this bit is set to 1, the TXDXn and RXDXn signals are multiplexed on the same pin so that half-duplex communications become possible.

25.2.47 ICR : Interrupt Control Register

Base address: SCI1 = 0x4011_8100

Offset address: 0x26

Bit position:	7	6	5	4	3	2	1	0
Bit field:	—	—	AEDIE	BCDIE	PIBDIE	CF1MIE	CF0MIE	BFDIE
Value after reset:	0	0	0	0	0	0	0	0

Bit	Symbol	Function	R/W
0	BFDIE	Break Field Low Width Detected Interrupt Enable 0: Interrupts on detection of the low width for a Break Field are disabled 1: Interrupts on detection of the low width for a Break Field are enabled	R/W
1	CF0MIE	Control Field 0 Match Detected Interrupt Enable 0: Interrupts on detection of a match with Control Field 0 are disabled 1: Interrupts on detection of a match with Control Field 0 are enabled	R/W
2	CF1MIE	Control Field 1 Match Detected Interrupt Enable 0: Interrupts on detection of a match with Control Field 1 are disabled 1: Interrupts on detection of a match with Control Field 1 are enabled	R/W
3	PIBDIE	Priority Interrupt Bit Detected Interrupt Enable 0: Interrupts on detection of the priority interrupt bit are disabled 1: Interrupts on detection of the priority interrupt bit are enabled	R/W
4	BCDIE	Bus Collision Detected Interrupt Enable 0: Interrupts on detection of a bus collision are disabled 1: Interrupts on detection of a bus collision are enabled	R/W
5	AEDIE	Valid Edge Detected Interrupt Enable 0: Interrupts on detection of a valid edge are disabled 1: Interrupts on detection of a valid edge are enabled	R/W
7:6	—	These bits are read as 0. The write value should be 0.	R/W

25.2.48 STR : Status Register

Base address: SCI1 = 0x4011_8100

Offset address: 0x27

Bit position:	7	6	5	4	3	2	1	0
Bit field:	—	—	AEDF	BCDF	PIBDF	CF1MF	CF0MF	BFDF
Value after reset:	0	0	0	0	0	0	0	0

Bit	Symbol	Function	R/W
0	BFDF	Break Field Low Width Detection Flag [Setting conditions] ● Detection of the low width for a Break Field ● Completion of the output of the low width for a Break Field ● Underflow of the timer [Clearing condition] ● Writing 1 to the BFDCL bit in STCR	R
1	CF0MF	Control Field 0 Match Flag [Setting conditions] ● A match between the value received in Control Field 0 and the set value. [Clearing condition] ● Writing 1 to the CF0MCL bit in STCR	R
2	CF1MF	Control Field 1 Match Flag [Setting conditions] ● A match between the data received in Control Field 1 and the set values. [Clearing condition] ● Writing 1 to the CF1MCL bit in STCR	R
3	PIBDF	Priority Interrupt Bit Detection Flag [Setting conditions] ● Detection of the priority interrupt bit [Clearing condition] ● Writing 1 to the PIBDCL bit in STCR	R

Bit	Symbol	Function	R/W
4	BCDF	Bus Collision Detected Flag [Setting conditions] ● Detection of the bus collision [Clearing condition] ● Writing 1 to the BCDCL bit in STCR	R
5	AEDF	Valid Edge Detection Flag [Setting conditions] ● Detection of a valid edge [Clearing condition] ● Writing 1 to the AEDCL bit in STCR	R
7:6	—	These bits are read as 0. The write value should be 0.	R

25.2.49 STCR : Status Clear Register

Base address: SCI1 = 0x4011_8100

Offset address: 0x28

Bit position:	7	6	5	4	3	2	1	0
Bit field:	—	—	AEDCL	BCDCL	PIBDCL	CF1MCL	CF0MCL	BFDCL
Value after reset:	0	0	0	0	0	0	0	0

Bit	Symbol	Function	R/W
0	BFDCL	BFDF Clear Setting this bit to 1 clears the STR.BFDF flag. This bit is read as 0.	R/W
1	CF0MCL	CF0MF Clear Setting this bit to 1 clears the STR.CF0MF flag. This bit is read as 0.	R/W
2	CF1MCL	CF1MF Clear Setting this bit to 1 clears the STR.CF1MF flag. This bit is read as 0.	R/W
3	PIBDCL	PIBDF Clear Setting this bit to 1 clears the STR.PIBDF flag. This bit is read as 0.	R/W
4	BCDCL	BCDF Clear Setting this bit to 1 clears the STR.BCDF flag. This bit is read as 0.	R/W
5	AEDCL	AEDF Clear Setting this bit to 1 clears the STR.AEDF flag. This bit is read as 0.	R/W
7:6	—	These bits are read as 0. The write value should be 0.	R/W

25.2.50 CF0DR : Control Field 0 Data Register

Base address: SCI1 = 0x4011_8100

Offset address: 0x29

Bit position:	7	6	5	4	3	2	1	0
Bit field:								
Value after reset:	0	0	0	0	0	0	0	0

The CF0DR register is an 8-bit readable and writable register that holds a value for comparison with Control Field 0.

25.2.51 CF0CR : Control Field 0 Compare Enable Register

Base address: SCI1 = 0x4011_8100

Offset address: 0x2A

Bit position:	7	6	5	4	3	2	1	0
Bit field:	CF0CE7	CF0CE6	CF0CE5	CF0CE4	CF0CE3	CF0CE2	CF0CE1	CF0CE0
Value after reset:	0	0	0	0	0	0	0	0

Bit	Symbol	Function	R/W
0	CF0CE0	Control Field 0 Bit 0 Compare Enable 0: Comparison with bit 0 of Control Field 0 disabled 1: Comparison with bit 0 of Control Field 0 enabled	R/W
1	CF0CE1	Control Field 1 Bit 0 Compare Enable 0: Comparison with bit 1 of Control Field 0 disabled 1: Comparison with bit 1 of Control Field 0 enabled	R/W
2	CF0CE2	Control Field 2 Bit 0 Compare Enable 0: Comparison with bit 2 of Control Field 0 disabled 1: Comparison with bit 2 of Control Field 0 enabled	R/W
3	CF0CE3	Control Field 3 Bit 0 Compare Enable 0: Comparison with bit 3 of Control Field 0 disabled 1: Comparison with bit 3 of Control Field 0 enabled	R/W
4	CF0CE4	Control Field 4 Bit 0 Compare Enable 0: Comparison with bit 4 of Control Field 0 disabled 1: Comparison with bit 4 of Control Field 0 enabled	R/W
5	CF0CE5	Control Field 5 Bit 0 Compare Enable 0: Comparison with bit 5 of Control Field 0 disabled 1: Comparison with bit 5 of Control Field 0 enabled	R/W
6	CF0CE6	Control Field 6 Bit 0 Compare Enable 0: Comparison with bit 6 of Control Field 0 disabled 1: Comparison with bit 6 of Control Field 0 enabled	R/W
7	CF0CE7	Control Field 7 Bit 0 Compare Enable 0: Comparison with bit 7 of Control Field 0 is disabled. 1: Comparison with bit 7 of Control Field 0 enabled	R/W

25.2.52 CF0RR : Control Field 0 Receive Data Register

Base address: SCI1 = 0x4011_8100

Offset address: 0x2B

Bit position:	7	6	5	4	3	2	1	0
Bit field:								
Value after reset:	0	0	0	0	0	0	0	0

CF0RR is a readable register that holds the value received in Control Field 0.

25.2.53 PCF1DR : Primary Control Field 1 Data Register

Base address: SCI1 = 0x4011_8100

Offset address: 0x2C

Bit position:	7	6	5	4	3	2	1	0
Bit field:								
Value after reset:	0	0	0	0	0	0	0	0

PCF1DR is an 8-bit readable and writable register that holds the 8-bit primary value for comparison with Control Field 1.

25.2.54 SCF1DR : Secondary Control Field 1 Data Register

Base address: SCI1 = 0x4011_8100

Offset address: 0x2D

Bit position:	7	6	5	4	3	2	1	0
Bit field:								
Value after reset:	0	0	0	0	0	0	0	0

SCF1DR is an 8-bit readable and writable register that holds the 8-bit secondary value for comparison with Control Field 1.

25.2.55 CF1CR : Control Field 1 Compare Enable Register

Base address: SCI1 = 0x4011_8100

Offset address: 0x2E

Bit position:	7	6	5	4	3	2	1	0
Bit field:	CF1CE7	CF1CE6	CF1CE5	CF1CE4	CF1CE3	CF1CE2	CF1CE1	CF1CE0
Value after reset:	0	0	0	0	0	0	0	0

Bit	Symbol	Function	R/W
0	CF1CE0	Control Field 1 Bit 0 Compare Enable 0: Comparison with bit 0 of Control Field 1 disabled 1: Comparison with bit 0 of Control Field 1 enabled	R/W
1	CF1CE1	Control Field 1 Bit 1 Compare Enable 0: Comparison with bit 1 of Control Field 1 disabled 1: Comparison with bit 1 of Control Field 1 enabled	R/W
2	CF1CE2	Control Field 1 Bit 2 Compare Enable 0: Comparison with bit 2 of Control Field 1 disabled 1: Comparison with bit 2 of Control Field 1 is enabled.	R/W
3	CF1CE3	Control Field 1 Bit 3 Compare Enable 0: Comparison with bit 3 of Control Field 1 disabled 1: Comparison with bit 3 of Control Field 1 enabled	R/W
4	CF1CE4	Control Field 1 Bit 4 Compare Enable 0: Comparison with bit 4 of Control Field 1 disabled 1: Comparison with bit 4 of Control Field 1 enabled	R/W
5	CF1CE5	Control Field 1 Bit 5 Compare Enable 0: Comparison with bit 5 of Control Field 1 disabled 1: Comparison with bit 5 of Control Field 1 enabled	R/W
6	CF1CE6	Control Field 1 Bit 6 Compare Enable 0: Comparison with bit 6 of Control Field 1 disabled 1: Comparison with bit 6 of Control Field 1 enabled	R/W

Bit	Symbol	Function	R/W
7	CF1CE7	Control Field 1 Bit 7 Compare Enable 0: Comparison with bit 7 of Control Field 1 disabled 1: Comparison with bit 7 of Control Field 1 enabled	R/W

25.2.56 CF1RR : Control Field 1 Receive Data Register

Base address: SCI1 = 0x4011_8100

Offset address: 0x2F

Bit position:	7	6	5	4	3	2	1	0
Bit field:								
Value after reset:	0	0	0	0	0	0	0	0

CF1RR is a readable register that holds the value received in Control Field 1.

25.2.57 TCR : Timer Control Register

Base address: SCI1 = 0x4011_8100

Offset address: 0x30

Bit position:	7	6	5	4	3	2	1	0
Bit field:	—	—	—	—	—	—	—	TCST
Value after reset:	0	0	0	0	0	0	0	0

Bit	Symbol	Function	R/W
0	TCST	Timer Count Start 0: Stops the timer counting 1: Starts the timer counting	R/W
7:1	—	These bits are read as 0. The write value should be 0.	R/W

25.2.58 TMR : Timer Mode Register

Base address: SCI1 = 0x4011_8100

Offset address: 0x31

Bit position:	7	6	5	4	3	2	1	0
Bit field:	—	TCSS[2:0]			TWRC	—	TOMS[1:0]	
Value after reset:	0	0	0	0	0	0	0	0

Bit	Symbol	Function	R/W
1:0	TOMS[1:0]	Timer Operating Mode Select*1 0 0: Timer mode 0 1: Break Field low width determination mode 1 0: Break Field low width output mode 1 1: Setting prohibited	R/W
2	—	This bit is read as 0. The write value should be 0.	R/W
3	TWRC	Counter Write Control 0: Data is written to the reload register and counter 1: Data is written to the reload register only	R/W

Bit	Symbol	Function	R/W
6:4	TCSS[2:0]	Timer Count Clock Source Select*1 0 0 0: PCLK 0 0 1: PCLK/2 0 1 0: PCLK/4 0 1 1: PCLK/8 1 0 0: PCLK/16 1 0 1: PCLK/32 1 1 0: PCLK/64 1 1 1: PCLK/128	R/W
7	—	This bit is read as 0. The write value should be 0.	R/W

Note 1. Rewrite the TOMS[1:0] and TCSS[2:0] bits only when the timer is stopped (TCST = 0).

TWRC bit (Counter Write Control)

This bit determines whether a value written to TPRE or TCNT is written to the reload register only or is written to both the reload register and the counter.

25.2.59 TPRE : Timer Prescaler Register

Base address: SCI1 = 0x4011_8100

Offset address: 0x32

Bit position:	7	6	5	4	3	2	1	0
Bit field:								
Value after reset:	1	1	1	1	1	1	1	1

TPRE consists of an 8-bit reload register, a read buffer, and a counter, each of which has 0xFF as its initial value. The counter counts down in synchronization with the counter clock selected by the TMR.TCSS[2:0] bits, and is reloaded with the value in the reload register when it underflows. Underflows of this register provide the clock source to drive counting by the TCNT register. The reload register and read buffer are allocated to the same address. Data is written to the reload register in writing, and the counter value that has been transferred to the read buffer is returned in reading.

It takes 1 PCLK cycle to load a value from the reload register to the counter.

25.2.60 TCNT : Timer Count Register

Base address: SCI1 = 0x4011_8100

Offset address: 0x33

Bit position:	7	6	5	4	3	2	1	0
Bit field:								
Value after reset:	1	1	1	1	1	1	1	1

TCNT consists of an 8-bit reload register, a read buffer, and a counter, each of which has 0xFF as its initial value. This down-counter counts underflows of the TPRE register until the TCNT register underflows, and is then reloaded with the value from the reload register. The reload register and read buffer are allocated to the same address. Data is written to the reload register in writing, and the counter value that has been transferred to the read buffer is returned in reading.

It takes 1 PCLK cycle to load a value from the reload register to the counter.

25.2.61 SCIMSKEN : SCI5 TXD Output Mask Enable Register

Base address: SCI5 = 0x4011_8500

Offset address: 0x3C

Bit position:	7	6	5	4	3	2	1	0
Bit field:	—	—	—	—	—	—	—	MSKEN
Value after reset:	0	0	0	0	0	0	0	0

Bit	Symbol	Function	R/W
0	MSKEN	SCI5 TXD Output Mask Enable 0: Disable SCI5 TXD output mask function 1: Enable SCI5 TXD output mask function	R/W
7:1	—	These bits are read as 0. The write value should be 0.	R/W

MSKEN bit (SCI5 TXD Output Mask Enable)

The SCIMSKEN bit enables the SCI5 TXD output mask function. When the MSKEN bit is 1, the TXD output of SCI5 can be masked by the AGTOA0 output.

There is a delay of 1 PCLKA cycle from the original TXD paths. Slowing down the PCLKA frequency also increases the delay, which may affect communication.

The following constraints must be observed.

f(PCLKA) > f(AGTOA0 output).

See Figure 25.3 for the block diagram when using this function.

Note: This function is valid only when the security attributions of SCI5 and AGT0 are same.

25.3 Operation in Asynchronous Mode

Figure 25.7 shows the general format for asynchronous serial communications. One frame consists of a start bit (low level), transmit or receive data, a parity bit, and stop bits (high level). In asynchronous serial communications, the communications line is usually held in the mark state (high level).

The SCI monitors the communications line. When the SCI detects a low, it regards that as a start bit and starts serial communication.

Inside the SCI, the transmitter and receiver are independent units, enabling full-duplex communications. Both the transmitter and receiver have a double-buffered structure in addition to FIFO mode, so that data can be read or written during transmission or reception, enabling continuous data transmission and reception.

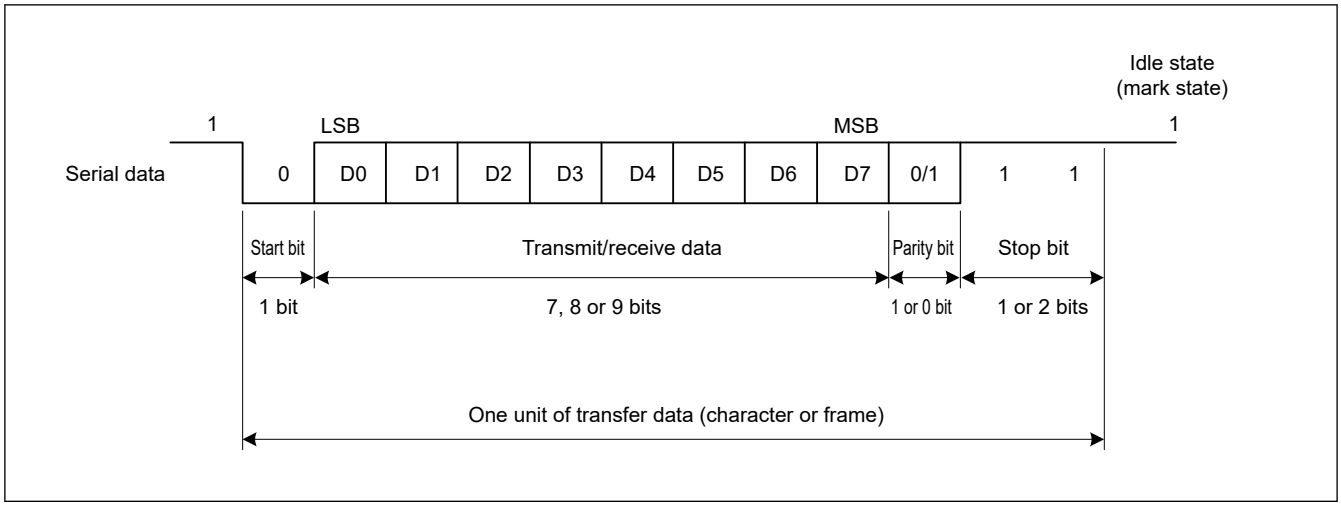

Figure 25.7 Data format in asynchronous serial communications with 8-bit data, parity bit, and 2 stop bits

25.3.1 Serial Data Transfer Format

Table 25.27 lists the serial data transfer formats that can be used in asynchronous mode. Any of 18 transfer formats can be selected with the SMR and SCMR settings. For details on the multi-processor function, see section 25.4. Multi-Processor Communication Function.

Table 25.27 Serial transfer formats in asynchronous mode

SCMR setting	SMR setting				Serial transfer format and frame length												
CHR1	CHR	PE	MP	STOP	1	2	3	4	5	6	7	8	9	10	11	12	13
0	0	0	0	0	ST	9-bit data									SP		
0	0	0	0	1	ST	9-bit data									SP	SP	
0	0	1	0	0	ST	9-bit data									P	SP	
0	0	1	0	1	ST	9-bit data									P	SP	SP
1	0	0	0	0	ST	8-bit data								SP			
1	0	0	0	1	ST	8-bit data								SP	SP		
1	0	1	0	0	ST	8-bit data								P	SP		
1	0	1	0	1	ST	8-bit data								P	SP	SP	
1	1	0	0	0	ST	7-bit data							SP				
1	1	0	0	1	ST	7-bit data							SP	SP			
1	1	1	0	0	ST	7-bit data							P	SP			
1	1	1	0	1	ST	7-bit data							P	SP	SP		
0	0	—	1	0	ST	9-bit data									MPB	SP	
0	0	—	1	1	ST	9-bit data									MPB	SP	SP
1	0	—	1	0	ST	8-bit data								MPB	SP		
1	0	—	1	1	ST	8-bit data								MPB	SP	SP	
1	1	—	1	0	ST	7-bit data							MPB	SP			
1	1	—	1	1	ST	7-bit data							MPB	SP	SP		

ST: Start bit
SP: Stop bit
P: Parity bit
MPB: Multi-processor bit

25.3.2 Receive Data Sampling Timing and Reception Margin in Asynchronous Mode

In asynchronous mode, the SCI operates on a base clock with a frequency of 16 times[*1] the bit rate.

In reception, the SCI samples the falling edge of the start bit using the base clock, and performs internal synchronization.[*2]

Because receive data is sampled on the rising edge of the 8th pulse[*1] of the base clock, data is latched at the middle of each bit (when sampling timing does not adjust (SPTR.ASEN = 0)), as shown in Figure 25.8 The reception margin in asynchronous mode is determined by the following formula (1):

$$M = \left|\left(0.5 - \frac{1}{2N}\right) - (L - 0.5)F - \frac{|D - 0.5|}{N}(1 + F)\right| \times 100\ [\%] \quad \ldots \quad \text{Formula (1)}$$

Note: M: Reception margin

N: Ratio of bit rate to clock

(N = 16 when SEMR.ABCSE = 0 and SEMR.ABCS = 0,

N = 8 when SEMR.ABCS = 1,

N = 6 when SEMR.ABCSE = 1)

D: Duty cycle of clock (D = 0.5 to 1.0)

L: Frame length (L = 9 to 13)

F: Absolute value of clock frequency deviation

Assuming values of F = 0 and D = 0.5 in formula (1), the reception margin is determined using the following formula:
$M = \{0.5 - 1/(2 \times 16)\} \times 100\ (\%) = 46.875\ \%$

This represents the computed value. Renesas recommends a margin of 20% to 30% in system design.

Note 1. In this example, the SEMR.ABCS bit is 0 and the SEMR.ABCSE is 0. When the ABCS bit is 1 and the ABCSE bit is 0, a frequency of 8 times the bit rate is used as a base clock, and receive data is sampled on the rising edge of the 4th pulse of the base clock.

When the ABCSE bit is 1, a sextuple frequency of a bit rate is used as a base clock, and receive data is sampled on the rising edge of the 3rd pulse of the base clock.

Note 2. The determination condition of the start bit is as follows.

The function of adjust sampling timing is OFF (ASEN = 0):

The determination condition of a start bit is that Low beyond half bit length continues. It is same as the sampling timing. In Figure 25.8, Low period should be kept over 8-cycles to detect a start bit. If Low period does not keep over 8-cycles, the IP judges this as a noise. So, the IP does not start reception and wait start bit.

The function of adjust sampling timing is ON (ASEN = 1):

The determination condition of a start bit is that Low keeps up until the sampling timing. Adjusting the sampling timing forward (AJD = 1) increases the possibility of erroneously determining a noise as the start bit.

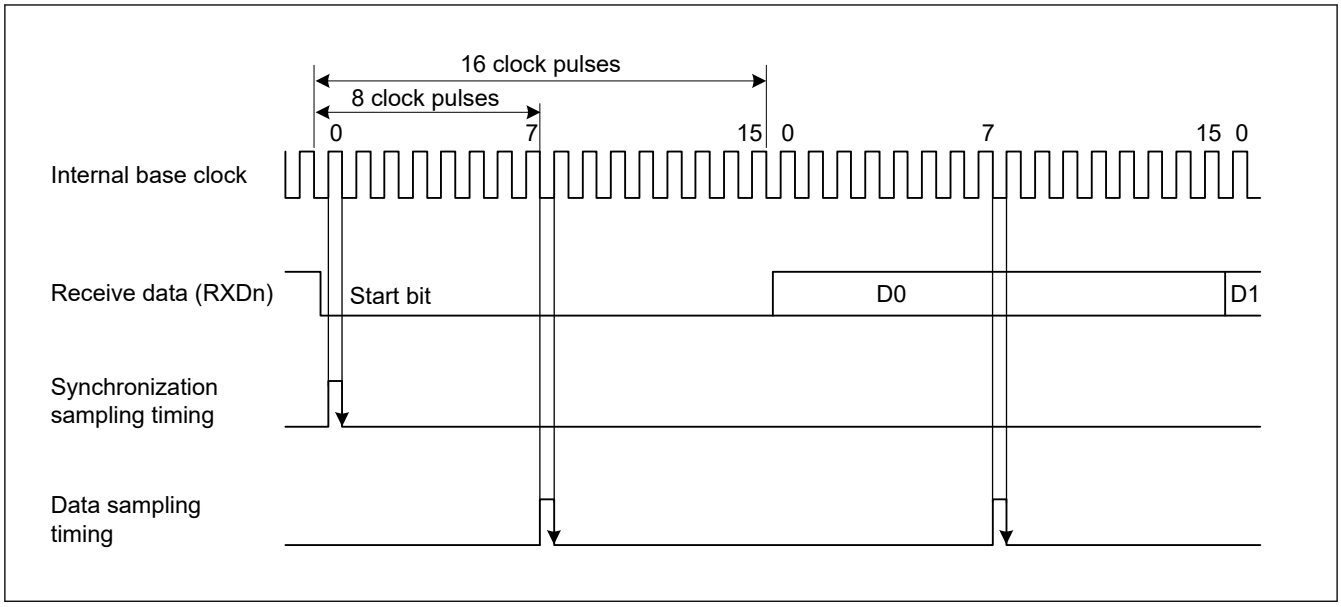

Figure 25.8 Receive data sampling timing in asynchronous mode

25.3.3 Clock

Either an internal clock generated by the on-chip baud rate generator or an external clock input to the SCKn pin can be selected as the transfer clock of the SCI, based on the SMR.CM and SCR.CKE[1:0] settings.

When an external clock is input to the SCKn pin, the clock frequency must be 16 times the bit rate (when SEMR.ABCS = 0) or 8 times the bit rate (when SEMR.ABCS = 1).

When the SCI uses its internal clock, the clock can be output from the SCKn pin. The frequency of the clock output in this case is equal to the bit rate, and the phase is configured so that the rising edge of the clock is in the middle of the transmit data, as shown in Figure 25.9.

When clock output is enabled, the clock is output after setting the SCR.TE or SCR.RE bit to 1.

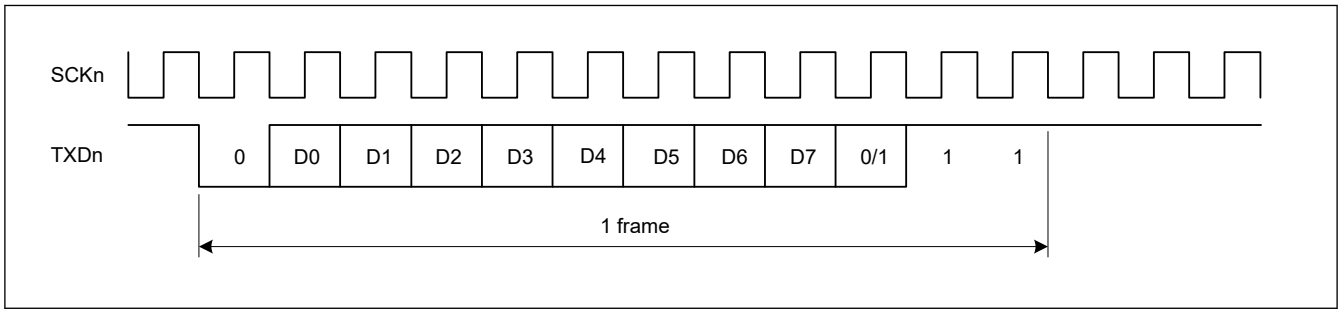

Figure 25.9 Phase relationship between output clock and transmit data in asynchronous mode when SMR.CHR = 0, PE = 1, MP = 0, and STOP = 1

25.3.4 Double-Speed Operation and Frequency of 6 Times the Bit Rate

When the SEMR.ABCS bit is set to 1 and eight pulses of the base clock for a 1-bit period is selected, the SCI operates on the bit rate twice that of when ABCS is set to 0. When the SEMR.BGDM bit is set to 1, the cycle of the base clock is half and the bit rate is double that of when BGDM is set to 0. When the SCR.CKE[1] bit is set to 0 and the on-chip baud rate generator is selected, setting the ABCS and BGDM bits to 1 allows the SCI to operate at a bit rate four times that when the ABCS and BGDM bits are set to 0.

When the SEMR.ABCSE bit is set to 1, the number of base clock pulses is 6 during a period of 1 bit, and the SCI operates at a bit rate 16/3 times that when SEMR.ABCS = 0, SEMR.BGDM = 0, and SEMR.ABCSE = 0.

As shown by Formula (1) in section 25.3.2. Receive Data Sampling Timing and Reception Margin in Asynchronous Mode, the reception margin decreases when the SEMR.ABCS or SEMR.ABCSE bit is set to 1. Therefore, if the target bit rate can be obtained with ABCS or ABCSE set to 0, it is recommended that you use the SCI with ABCS and ABCSE set to 0.

25.3.5 CTS and RTS Functions

The CTS function uses input on the CTSn_RTSn pin in transmission control. Setting the SPMR.CTSE bit to 1 enables the CTS function. For the functions of CTS and RTS, you can select the alternate setting that uses either function with one terminal and the dedicated setting that uses each function independently with two terminals. This setting is done with the SPMR.CTSPEN bit.

When the CTS function is enabled, placing a low level on the CTSn_RTSn pin causes transmission to start.

Driving the CTSn_RTSn pin high while transmission is in progress does not affect transmission of the current frame.

In the RTS function, which uses output on the CTSn_RTSn pin, a low level is output when reception becomes possible. Conditions for output of the low and high levels are shown in this section.

[Conditions for low level output]

Satisfaction of all conditions are listed in this section.

Non-FIFO selected

- The value of the SCR.RE bit is 1
- Reception is not in progress
- There is no received data yet to be read
- The ORER, FER, and PER flags in the SSR register are all 0

FIFO selected

- The value of the SCR.RE bit is 1
- The amount of receive data written in FRDRHL is equal to or less than the setting value of FCRH.RSTRG[3:0]
- The ORER flag in the SSR_FIFO register (ORER in FRDRH) is 0

[Condition for high level output]

- The conditions for low-level output are not satisfied

25.3.6 Address Match (Receive Data Match Detection) Function

The address match function can be used only in asynchronous mode.

If the DCCR.DCME bit is set to 1, when one frame of data is received, the SCI compares that received data with the data set in CDR.CMPD. If the SCI detects a match to the comparison data (CDR.CMPD[*1]) with the received data, the SCI can issue the SCIn_RXI interrupt request.

If the SMR.MP bit is set to 0, comparison occurs only for valid data in receive format. In multi-processor mode (SMR.MP bit = 1), if the DCCR.IDSEL bit is set to 1, receive data where the MPB bit is 1 is subject to comparison for address match and receive data where the MPB bit is 0 is always treated as a non-match.

If the DCCR.IDSEL bit is set to 0, SCI performs address match detection regardless of the MPB bit value of the received data.

Until SCI detects a match to the comparison data (CDR.CMPD[*1]) with receive data, received data is skipped (discarded), and the SCI cannot detect a parity error or framing error.

When SCI detects a match, the DCCR.DCME bit is automatically cleared, and the DCCR.DCMF flag is set to 1. If the DCCR.IDSEL bit is set to 1, the SCR.MPIE bit is automatically cleared. If DCCR.IDSEL is set to 0, the value of the SCR.MPIE bit is retained. If the SCR.RIE bit is set to 1, the SCI issues an SCIn_RXI interrupt request.

If the SCI detects a framing error in the receive data for which a match is detected, the DCCR.DFER flag is set to 1, and if the SCI detects a parity error in that frame, the DCCR.DPER flag is set to 1. The compared receive data is not stored in the RDR register, and SSR.RDRF remains 0. When FCR.FM = 1, the RDR register indicates the FRDRHL register, and the SSR.RDRF flag indicates the SSR_FIFO.RDF flag.

After the SCI detects a match, and DCCR.DCME is automatically cleared, the SCI receives the next data continuously based on the current register setting.

When the DCCR.DFER or DCCR.DPER flag is set, the address match detection is not performed. Before enabling the address match function, set the DCCR.DFER and DCCR.DPER flags to 0.

Examples of the address match function are shown in Figure 25.10 and Figure 25.11.

Note 1. This comparative target can select one length of 3 types: CMPD[6:0] with 7-bit length, CMPD[7:0] with 8-bit length, and CMPD[8:0] with 9-bit length.

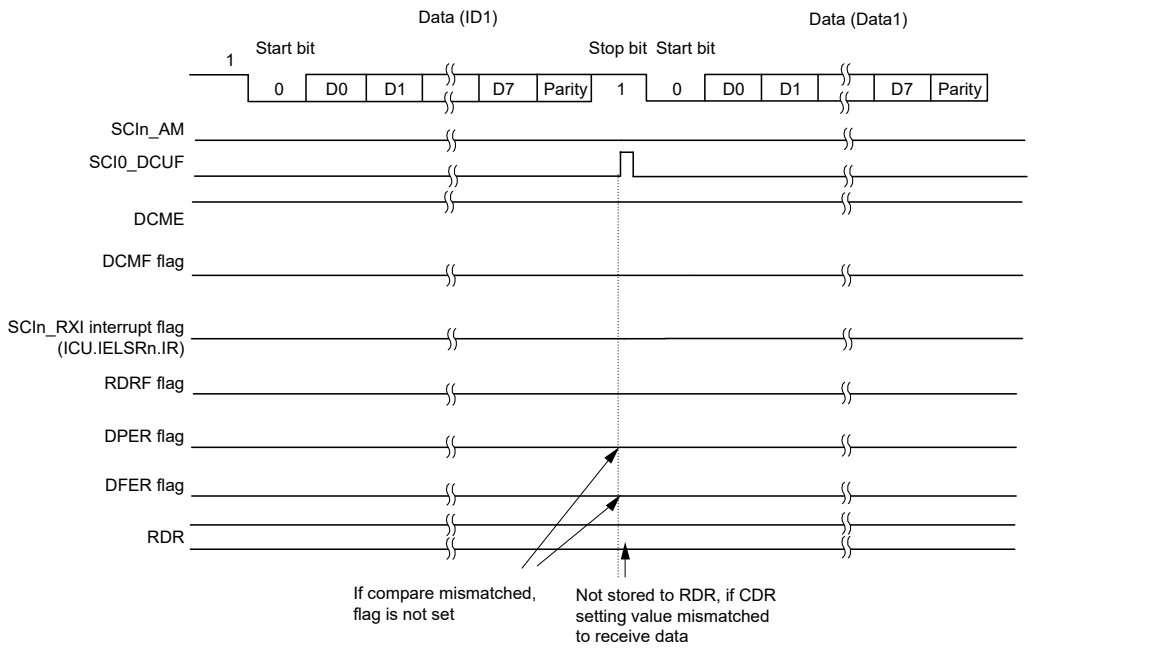

(a) Example of compare mismatched between receive data and CDR (8-bit length/parity/non multi-processor mode)

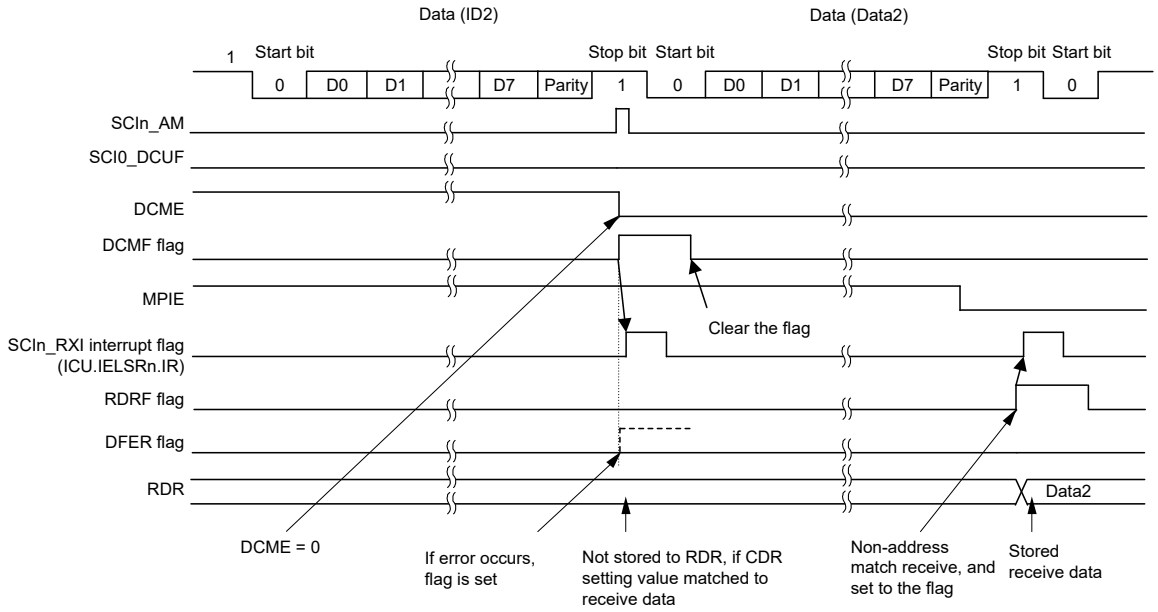

(b) Example of compare matched between receive data and CDR (8-bit length/parity/non multi-processor mode)

Figure 25.10 Example of address match (1) normal mode

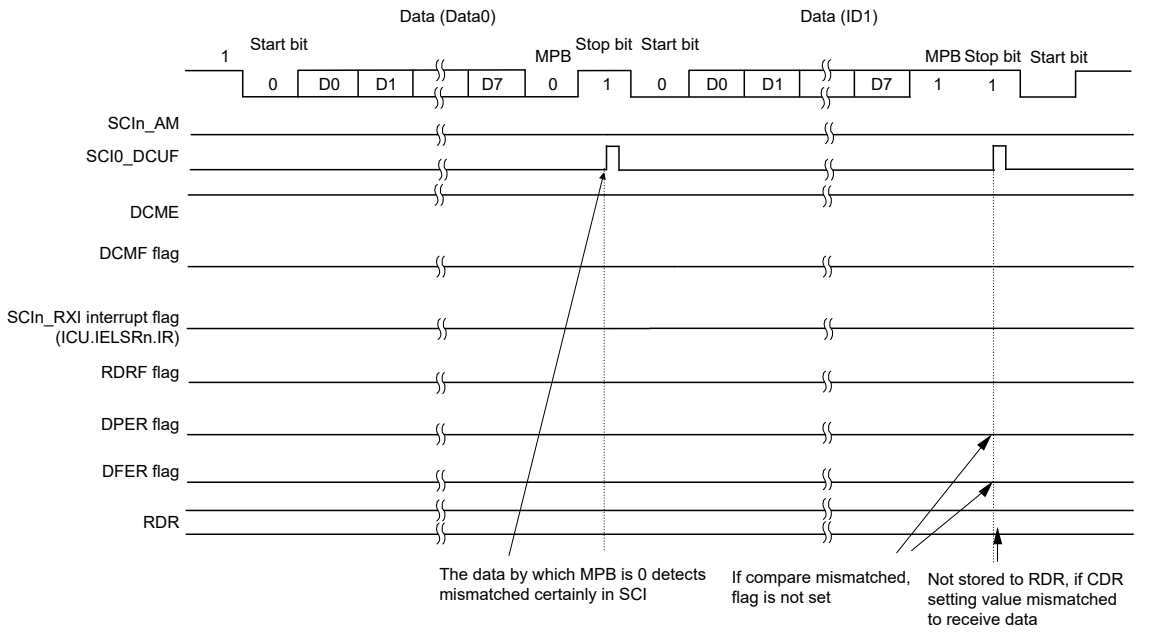

(a) Example of compare mismatched between receive data and CDR (8-bit length/IDSEL = 1/multi-processor mode)

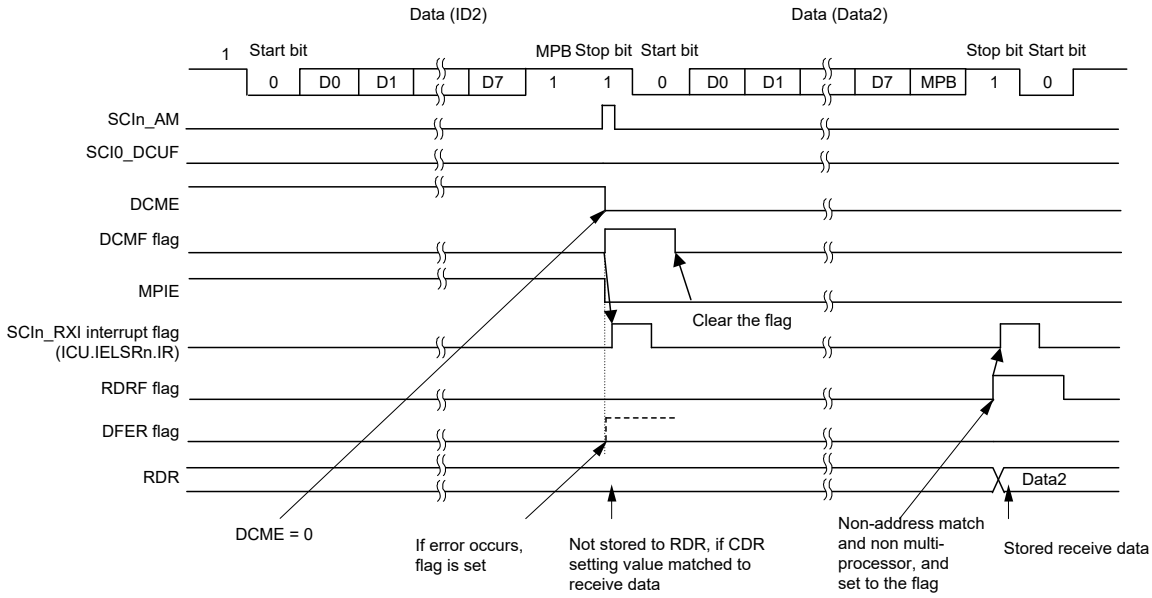

(b) Example of compare matched between receive data and CDR (8-bit length/IDSEL = 1/multi-processor mode)

Figure 25.11 Example of address match (2) multi-processor mode

25.3.7 SCI Initialization in Asynchronous Mode

Before transmitting and receiving data, start by writing the initial value 0x00 to the SCR register, then continue through the SCI initialization procedure (select non-FIFO or FIFO) shown in Table 25.28 and Table 25.29. Whenever the operating mode or transfer format is to be changed, the SCR register must be initialized before the change is made.

When the external clock is used in asynchronous mode, ensure that the clock signal is supplied during initialization.

Note: Setting the SCR.RE bit to 0 initializes neither the ORER, FER, RDRF, RDF, PER, and DR flags in SSR/SSR_FIFO nor RDR and RDRHL. When the TE bit is set to 0, the TEND flag for the selected FIFO buffer is not initialized.

Note: In non-FIFO mode, switching the value of the SCR.TE bit from 1 to 0 or 0 to 1 while the SCR.TIE bit is 1 leads to the generation of an SCIn_TXI interrupt request.

Table 25.28 Example flow of SCI initialization in asynchronous mode with non-FIFO selected

No.	Step Name	Description
1	Start initialization	
2	Set the SCR.TIE, RIE, TE, RE, and TEIE bits to 0	
3	Set the FCR.FM bit to 0	Set the FCR.FM bit to 0.
4	Set the SCR.CKE[1:0] bits	Set the clock selection in SCR. When the clock output is selected in asynchronous mode, the clock is output immediately after SCR settings are made.
5	Set the SIMR1.IICM bit to 0. Set the SPMR.CKPH and CKPOL bits to 0.	Set the SIMR1.IICM bit to 0. Set the SPMR.CKPH and CKPOL bits to 0. Step 5 can be skipped if the values have not been changed from the initial values.
6	Set the data transmission/ reception format in SMR, SCMR, and SEMR	Set data transmission/reception format in SMR, SCMR, and SEMR.
7	Set a value in SPTR and ACTR	Set the communication terminals status in SPTR and adjustable sampling values in ACTR.
8	Set a value in BRR	Write a value corresponding to the bit rate to BRR. This step is not necessary if an external clock is used.
9	Set a value in MDDR	Write the value obtained by correcting a bit rate error in MDDR. This step is not necessary if the BRME bit in SEMR is set to 0 or an external clock is used.
10	Set the I/O port functions	Make I/O port settings to enable input and output functions as required for TXDn, RXDn, and SCKn pins.
11	Set the SCR.TE or RE bit to 1, and set the SCR.TIE and RIE bits	Set the SCR.TE or RE bit to 1. Also set the SCR.TIE and RIE bits. Setting the TE and RE bits allows TXDn and RXDn to be used.
12	Initialization completion	

Table 25.29 Example flow of SCI initialization in asynchronous mode with FIFO selected (1 of 2)

No.	Step Name	Description
1	Start initialization	
2	Set the SCR.TIE, RIE, TE, RE, and TEIE bits to 0	
3	Set the FCR.FM, TFRST, and RFRST bits to 1. Set the FCR.TTRG[3:0], RTRG[3:0], and RSTRG[3:0] bits.	Set the FCR.FM, TFRST, and RFRST bits to 1 (FIFO mode enabled, transmit/receive FIFOs empty). Set the FCR.TTRG[3:0], RTRG[3:0], and RSTRG[3:0] bits.
4	Set the SCR.CKE[1:0] bits	Set the clock selection in SCR. When the clock output is selected in asynchronous mode, the clock is output immediately after SCR settings are made.
5	Set the SIMR1.IICM bit to 0. Set the SPMR.CKPH and CKPOL bits to 0.	Set the SIMR1.IICM bit to 0. Set the SPMR.CKPH and CKPOL bits to 0. Step 5 can be skipped if the values have not been changed from the initial values.
6	Set the data transmission/ reception format in SMR, SCMR, and SEMR	Set data transmission/reception format in SMR, SCMR, and SEMR.
7	Set a value in SPTR and ACTR	Set the communication terminals status in SPTR and adjustable sampling values in ACTR.
8	Set a value in BRR	Write a value corresponding to the bit rate to BRR. This step is not necessary if an external clock is used.

Table 25.29 Example flow of SCI initialization in asynchronous mode with FIFO selected (2 of 2)

No.	Step Name	Description
9	Set a value in MDDR	Write the value obtained by correcting a bit rate error in MDDR. This step is not necessary if the BRME bit in SEMR is set to 0 or an external clock is used.
10	Set the FCR.TFRST and RFRST bits to 0	Set the FCR.TFRST and RFRST bits to 0.
11	Set the I/O port functions	Make I/O port settings to enable input and output functions as required for TXDn, RXDn, and SCKn pins.
12	Set the SCR.TE or RE bit to 1, and set the SCR.TIE and RIE bits	Set the SCR.TE or RE bit to 1. Also set the SCR.TIE and RIE bits. Setting the TE and RE bits allows TXDn and RXDn to be used.
13	Initialization completion	

25.3.8 Serial Data Transmission in Asynchronous Mode

(1) Non-FIFO selected

Figure 25.12, Figure 25.13, and Figure 25.14 show examples of serial transmission in asynchronous mode.

In serial transmission, the SCI operates as described in this section. When the SCR.TE bit is set to 1, the high level is output to TXDn for one frame. However, when SEMR.PADIS is set to "1", this preamble will not be output. An example of operation when preamble is not output is shown in Figure 25.15.

1. The SCI transfers data from the TDR[*1] register to the TSR register when data is written to TDR[*1] in the SCIn_TXI interrupt handling routine.
   The SCIn_TXI interrupt request at the beginning of transmission is generated when the SCR.TE and SCR.TIE bits are set to 1 simultaneously by a single instruction.
2. Transmission starts after the SPMR.CTSE bit is set to 0 (CTS function is disabled) or a low level on the CTSn_RTSn pin causes data transfer from the TDR[*1] register to the TSR register. If the SCR.TIE bit is 1, an SCIn_TXI interrupt request is generated. Continuous transmission is possible by writing the next transmit data to the TDR[*1] register in the SCIn_TXI interrupt handling routine before transmission of the current transmit data is complete. When SCIn_TEI interrupt requests are in use, set the SCR.TIE bit to 0 (SCIn_TXI interrupt requests are disabled) and the SCR.TEIE bit to 1 (an SCIn_TEI interrupt request is enabled) after the last of the data to be transmitted is written to the TDR[*1] register from the handling routine for SCIn_TXI requests.
3. Data is sent from the TXDn pin in the following order:
   - Start bit
   - Transmit data
   - Parity bit or multi-processor bit (can be omitted depending on the format)
   - Stop bit
4. The SCI checks for update of the TDR register on output of the stop bit.
5. When the TDR register is updated, setting the SPMR.CTSE bit to 0 (CTS function is disabled) or a low level input on the CTSn_RTSn pin causes transfer of the next transmit data from the TDR[*1] register to the TSR register and transmission of the stop bit, after which serial transmission of the next frame starts.
6. If the TDR register is not updated, the SSR.TEND flag is set to 1, the stop bit is sent, and the mark state is entered, in which 1 is output. If the SCR.TEIE bit is 1, the SSR.TEND flag is set to 1 and an SCIn_TEI interrupt request is generated.

Note 1. The TDRHL register when 9-bit data length is selected.

Figure 25.12, Figure 25.13, and Figure 25.14 show examples of serial transmission in asynchronous mode.

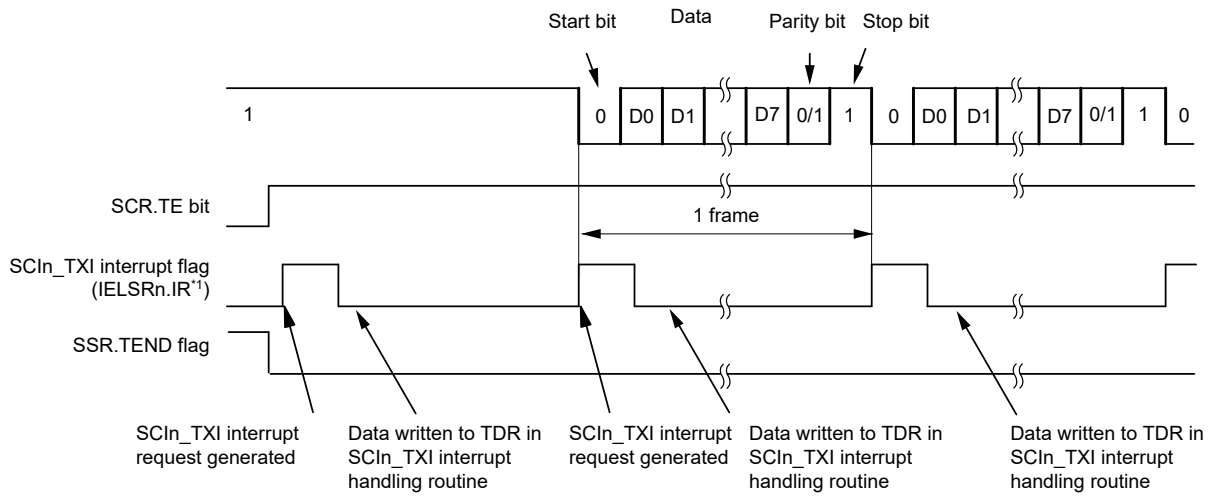

Note 1. See section 12, Interrupt Controller Unit (ICU) for information on the corresponding interrupt event number.

Figure 25.12 Example operation for serial transmission in asynchronous mode (1) with 8-bit data, parity bit, 1 stop bit, CTS function not used, and at the beginning of transmission

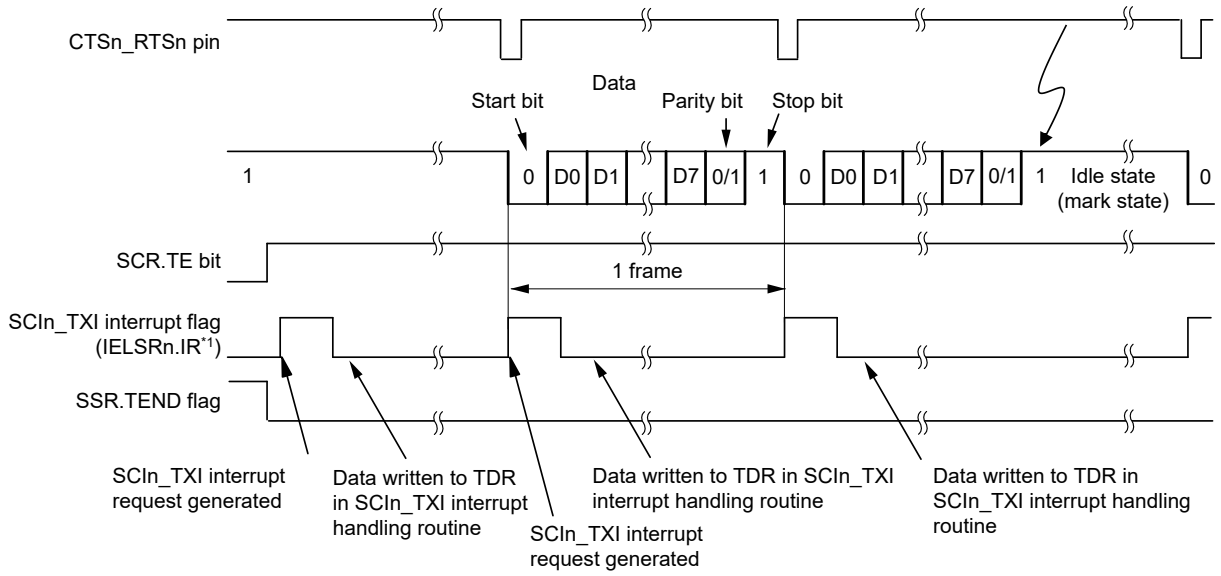

Note 1. See section 12, Interrupt Controller Unit (ICU) for information on the corresponding interrupt event number.

Figure 25.13 Example operation for serial transmission in asynchronous mode (2) with 8-bit data, parity bit, one stop bit, CTS function used, and at the beginning of transmission

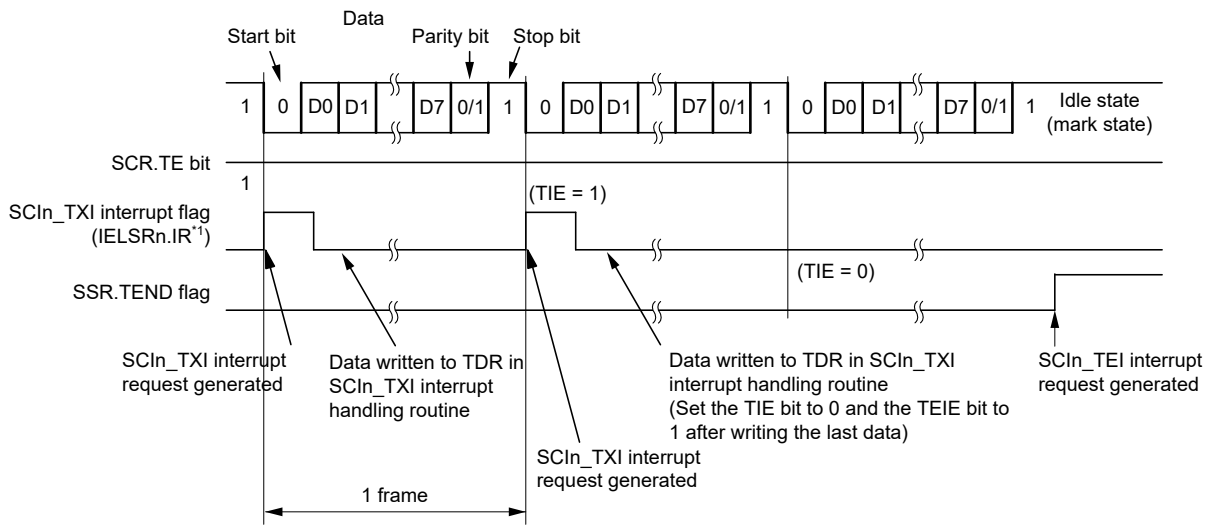

Note 1. See section 12, Interrupt Controller Unit (ICU) for information on the corresponding interrupt event number.

Figure 25.14 Example operation for serial transmission in asynchronous mode (3) with 8-bit data, parity bit, one stop bit, CTS function not used, and from the middle of transmission until transmission completion

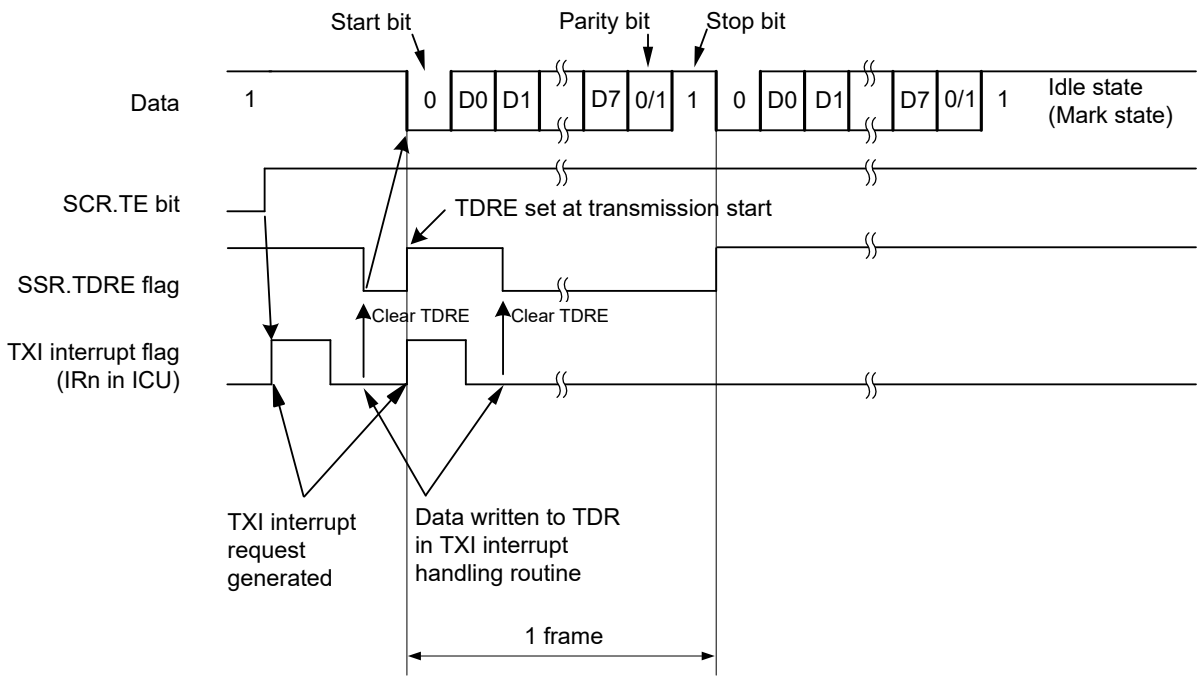

Figure 25.15 Example of Operation for Serial Transmission in Asynchronous Mode (4)(with 8-Bit Data, Parity, 1 Stop Bit, CTS Function Not Used, from the Middle of Transmission until Transmission Completion, stop preamble)

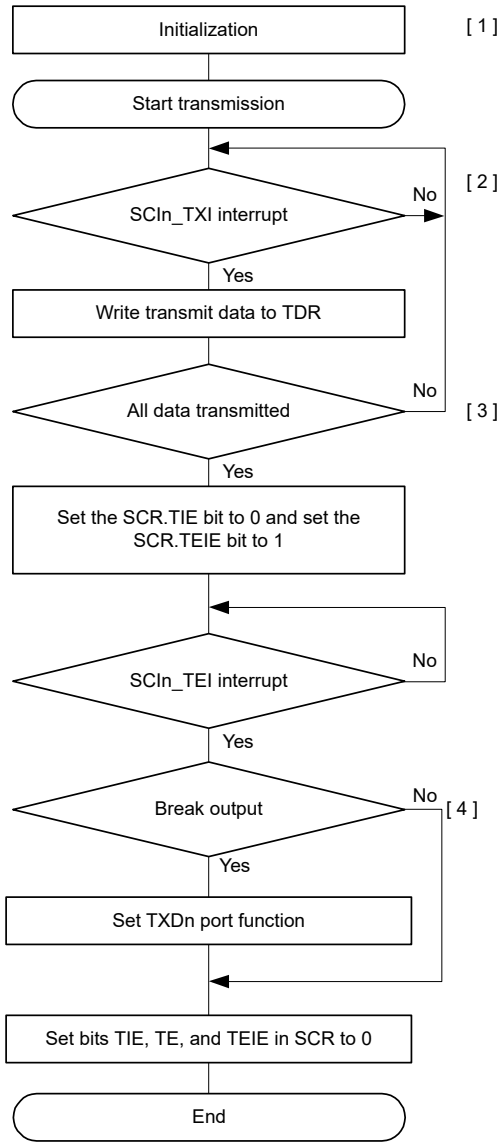

[1] SCI Initialization:
Set data transmission.
After the SCR.TE bit is set to 1, 1 is output for a frame, and transmission is enabled.

[2] Transmit data write to TDR by an SCIn_TXI interrupt request. When transmit data is transferred from TDR to TSR, a transmit data empty interrupt (SCIn_TXI) request is generated. Write transmit data to TDR once in the SCIn_TXI interrupt processing routine.

[3] Serial transmission continuation procedure:
To continue serial transmission write transmit data to TDR once using an SCIn_TXI interrupt request.
Transmit data can also be written to TDR by activating the DMAC or DTC.
When SCIn_TEI interrupt requests are in use, set the SCR.TIE bit to 0 and the SCR.TEIE bit to 1 after the last of the data to be transmitted is written to TDR.

[4] Break output at the end of serial transmission:
To output a break in serial transmission, after setting the output state (LOW level output) of TXDn pin by SPTR.SPB2IO and SPTR.SPB2DT bits, set the SCR.TE bit to 0.

Figure 25.16 Example flow of serial transmission in asynchronous mode with non-FIFO selected

(2) FIFO selected

Figure 25.17 shows an example of a data format that is written to FTDRH and FTDRL register in asynchronous mode.

Data corresponding to the data length is set to FTDRH and FTDRL. Write 0 for unused bits. Write in order from FTDRH to FTDRL.

Data Length	Register Setting		Transmit data in FTDRH, FTDRL															
			FTDRHL															
			FTDRH								FTDRL							
	SCMR. CHR1	SMR. CHR	b7	b6	b5	b4	b3	b2	b1	b0	b7	b6	b5	b4	b3	b2	b1	b0
7 bits	1	0	–	–	–	–	–	–	–	–	–	7-bit transmit data						
8 bits	1	1	–	–	–	–	–	–	–	–	8-bit transmit data							
9 bits	0	Don't care	–	–	–	–	–	–	–	9-bit transmit data								

Note: —: Invalid. The write value should be 0.

Figure 25.17 Data format written to FTDRH and FTDRL with FIFO selected

In serial transmission, the SCI operates as described in this section. When the TE bit is set to 1, the high level is output to TXDn for one frame (preamble).

1. The SCI transfers data from the FTDRL[*1] register to the TSR register when data is written to FTDRL[*1] in the SCIn_TXI interrupt handling routine. The amount of data that can be written to FTDRL is 16 minus FDR.T[4:0] bytes. The SCIn_TXI interrupt request at the beginning of transmission is generated when the SCR.TE and SCR.TIE bits are set to 1 simultaneously by a single instruction.
2. Transmission starts after the SPMR.CTSE bit is set to 0 (CTS function is disabled) or a low level on the CTSn_RTSn pin causes data transfer from the FTDRL[*1] register to the TSR register. When the amount of transmit data written in FTDRL is equal to or less than the specified transmit triggering number, SSR_FIFO.TDFE is set to 1. If the SCR.TIE bit is 1, an SCIn_TXI interrupt request is generated. Continuous transmission is possible by writing the next transmit data to FTDRL[*1] in the SCIn_TXI interrupt handling routine before transmission of the current transmit data is complete. When SCIn_TEI interrupt requests are in use, set the SCR.TIE bit to 0 (SCIn_TXI interrupt requests are disabled) and the SCR.TEIE bit to 1 (an SCIn_TEI interrupt request is enabled) after the last of the data to be transmitted is written to the FTDRL[*1*2] register from the handling routine for SCIn_TXI requests.
3. Data is sent from the TXDn pin in the following order:
   - Start bit
   - Transmit data
   - Parity bit or multi-processor bit (can be omitted depending on the format)
   - Stop bit
4. On output of the stop bit, the SCI checks whether non-transmitted data remains in the FTDRL[*3] register.
5. When data is set to FTDRL[*3], setting the SPMR.CTSE bit to 0 (CTS function is disabled) or a low level input on the CTSn_RTSn pin causes transfer of the next transmit data from FTDRL[*1] to TSR and transmission of the stop bit, after which serial transmission of the next frame starts.
6. If data is not set in FTDRL[*3], the TEND flag in SSR_FIFO is set to 1, the stop bit is sent, and the mark state is entered in which 1 is output. If the SCR.TEIE bit is 1, the SSR_FIFO.TEND flag is set to 1 and an SCIn_TEI interrupt request is generated.

Note 1. Write data not to FTDRL but to the FTDRH and FTDRL registers.
Note 2. Write data in order from FTDRH to FTDRL when 9-bit data length is selected.
Note 3. The SCI only checks for update to the FTDRL register and not the FTDRH register when 9-bit data length is selected.

Figure 25.18 shows an example flow of serial transmission in asynchronous mode with FIFO selected.

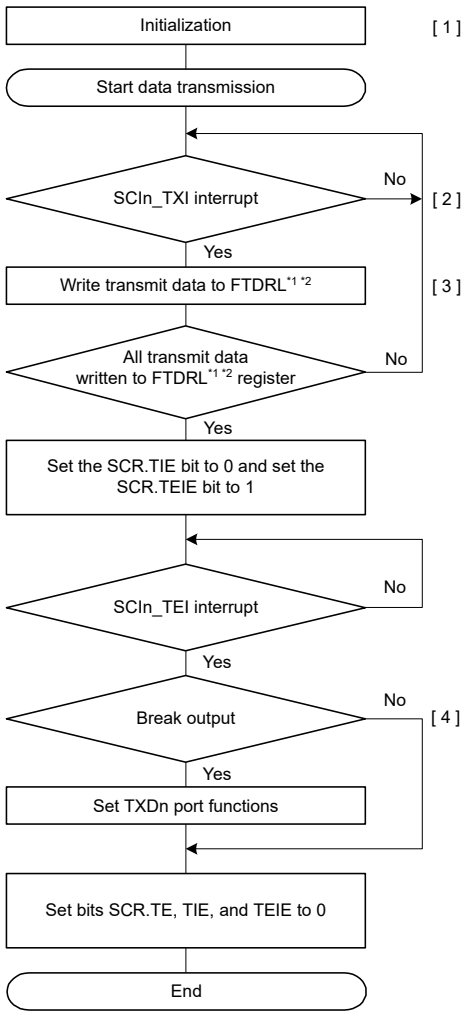

[1] SCI initialization:
Set data transmission.
After the SCR.TE bit is set to 1, 1 is output for a frame, and transmission is enabled.

[2] Transmit data write to FTDRL*1 by an SCIn_TXI interrupt request:
When transmit data is transferred from FTDRL to TSR, when the quantity of transmit data written in FTDRL is equal to or less than the specified transmit triggering number, a transmit data FIFO empty interrupt (SCIn_TXI) request is generated. Write transmit data to FTDRL*1 *2 once in the SCIn_TXI interrupt handling routine.

[3] Serial transmission continuation procedure:
To continue serial transmission, write all transmit data to FTDRL using an SCIn_TXI interrupt request and clear the SSR_FIFO.TDFE flag to 0. The number of transmission data it is possible to write in is 16 - (the number of stored transmit FIFO data). Transmit data can also be written to FTDRL by activating the DTC or DMAC. When writing the data to FTDRL by DTC or DMAC, the TDFE flag is cleared automatically, so do not write to the TDFE flag.
When SCIn_TEI interrupt requests are in use, set the SCR.TIE bit to 0 and the SCR.TEIE bit to 1 after the last of the data to be transmitted is written to FTDRL.

[4] Break output at the end of serial transmission:
To output a break in serial transmission, after setting the output state (LOW level output) of TXD pin by SPTR.SPB2IO and SPTR.SPB2DT bits, set the SCR.TE bit to 0.

Note 1. When data length is 9 bits, this refers to FTDRH and FTDRL registers.
Note 2. When data length is 9 bits, write in order from FTDRH to FTDRL.

Figure 25.18 Example flow of serial transmission in asynchronous mode with FIFO selected

25.3.9 Serial Data Reception in Asynchronous Mode

(1) Non-FIFO selected

Figure 25.19 and Figure 25.20 show an example of the operation for serial data reception in asynchronous mode.

In serial data reception, the SCI operates as follows:

1. When the value of the SCR.RE bit becomes 1, the output signal on the CTSn_RTSn pin goes low.
2. The SCI monitors the communications line and when it detects a start bit, the SCI performs internal synchronization, stores receive data in RSR.
3. If the multi-processor communication function is enabled (SMR.MP = 1), see section 25.4.2. Multi-Processor Serial Data Reception. If the address match function (data compare match function) is enabled (DCCR.DCME = 1), the SCI cannot detect a parity or framing error as receive data are skipped (discarded) until the SCI detects a match between the receive data and comparison data (CDR.CMPD*1).

4. If the SCI detects an address match, the DCCR.DCME bit is automatically cleared, the DCCR.DCMF flag becomes 1, and an SCIn_AM interrupt*2 request is generated. To enable the generation of an SCIn_RXI interrupt request, set the SCR.RIE bit to 1. The compared receive data are not stored in the RDR register*3. The SSR.RDRF flag remains 0.
5. If the SCI detects a framing error in the receive data for which an address match is detected, the DCCR.DFER flag is set to 1, and if the SCI detects a parity error in that frame, the DCCR.DPER flag becomes 1. To enable the generation of an SCIn_ERI interrupt request, set the SCR.RIE bit to 1.
6. If a framing or a parity error is detected (the DCCR.DFER flag or DCCR.DPER flag is 1) in the SCIn_AM interrupt handling routine, set the DCCR.DFER and DCCR.DPER flags to 0 and set the DCCR.DCME bit to 1 to enable the address match function again. If neither a framing nor a parity error has been detected (the DCCR.DFER and DCCR.DPER flags are both 0), set the DCCR.DCMF flag to 0. See Figure 25.10.
7. If an overrun error occurs, the SSR.ORER flag is set to 1. If the SCR.RIE bit is 1, an SCIn_ERI interrupt request is generated. Receive data is not transferred to the RDR*3 register.
8. If a parity error is detected, the SSR.PER flag is set to 1 and receive data is transferred to the RDR*3 register. If the SCR.RIE bit is 1, an SCIn_ERI interrupt request is generated.
9. If a framing error is detected, the SSR.FER flag is set to 1 and receive data is transferred to the RDR*3 register. If the SCR.RIE bit is 1, an SCIn_ERI interrupt request is generated.
10. When reception finishes successfully, receive data is transferred to the RDR*3 register. If the SCR.RIE bit is 1, an SCIn_RXI interrupt request is generated. Continuous reception is enabled by reading the receive data transferred to the RDR register in the SCIn_RXI interrupt handling routine before reception of the next receive data is complete. Reading the received data that was transferred to the RDR register causes the CTSn_RTSn pin to output low.

Note 1. This scope of comparison is selectable as one of three lengths: CMPD[6:0] is for 7-bit length, CMPD[7:0] is for 8-bit length, and CMPD[8:0] is for 9-bit length.
Note 2. As no interrupt enable bit is assigned to the SCIn_AM interrupt, an interrupt request is generated by setting the DCCR.DCMF to 1.
Note 3. Only read data in the RDRHL register when 9-bit data length is selected.

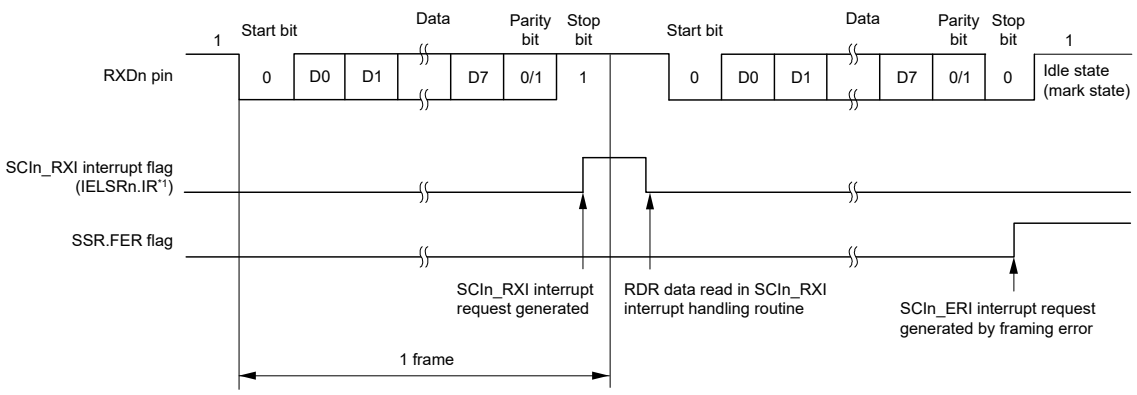

Note 1. See section 12, Interrupt Controller Unit (ICU) for information on the corresponding interrupt event number.

Figure 25.19 Example of SCI operation for serial reception in asynchronous mode (1) when the RTS function is not used, and with 8-bit data, parity bit, and 1 stop bit

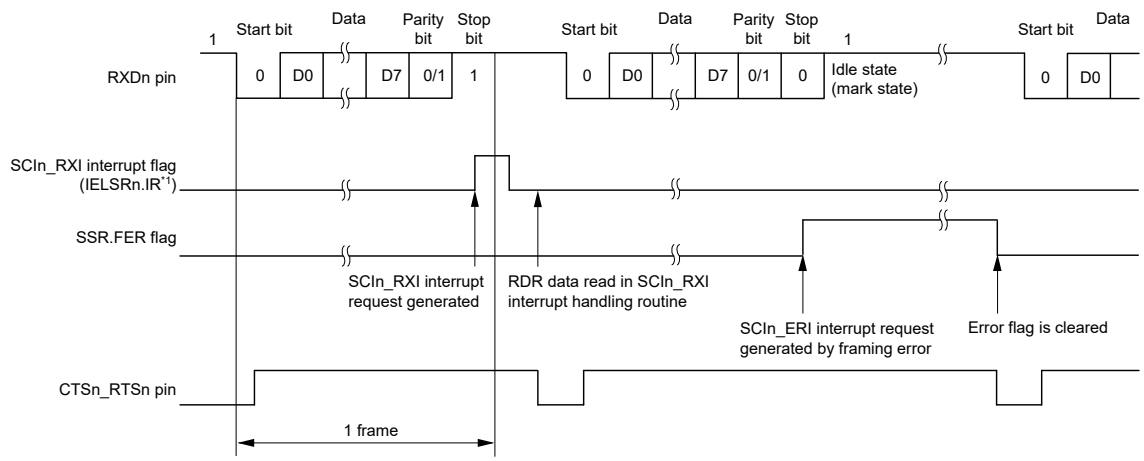

Note 1. See section 12, Interrupt Controller Unit (ICU) for information on the corresponding interrupt event number.

Figure 25.20 Example of SCI operation for serial reception in asynchronous mode (2) when RTS function is used, and with 8-bit data, parity bit, and 1 stop bit

Table 25.30 lists the states of the flags in the SSR register and receive data handling when a receive error is detected.

If a receive error is detected, an SCIn_ERI interrupt request is generated but an SCIn_RXI interrupt request is not generated. Data reception cannot be resumed while the receive error flag is 1. Accordingly, set the ORER, FER, and PER bits to 0 before resuming reception. In addition, be sure to read the RDR or RDRHL register during overrun error processing. When a reception is forced to terminate by setting the SCR.RE bit to 0 during operation, read the RDR or RDRHL register because received data that is not yet read might be left in the RDR or RDRHL.

Figure 25.21 and Figure 25.22 show example flows of serial data reception.

Table 25.30 Flags in SSR Status Register and receive data handling

Flags in the SSR Status Register			Receive data	Receive error type
ORER	FER	PER		
1	0	0	Lost	Overrun error
0	1	0	Transferred to RDR*1	Framing error
0	0	1	Transferred to RDR*1	Parity error
1	1	0	Lost	Overrun error + framing error
1	0	1	Lost	Overrun error + parity error
0	1	1	Transferred to RDR*1	Framing error + parity error
1	1	1	Lost	Overrun error + framing error + parity error

Note 1. Only read data in the RDRHL register when 9-bit data length is selected.

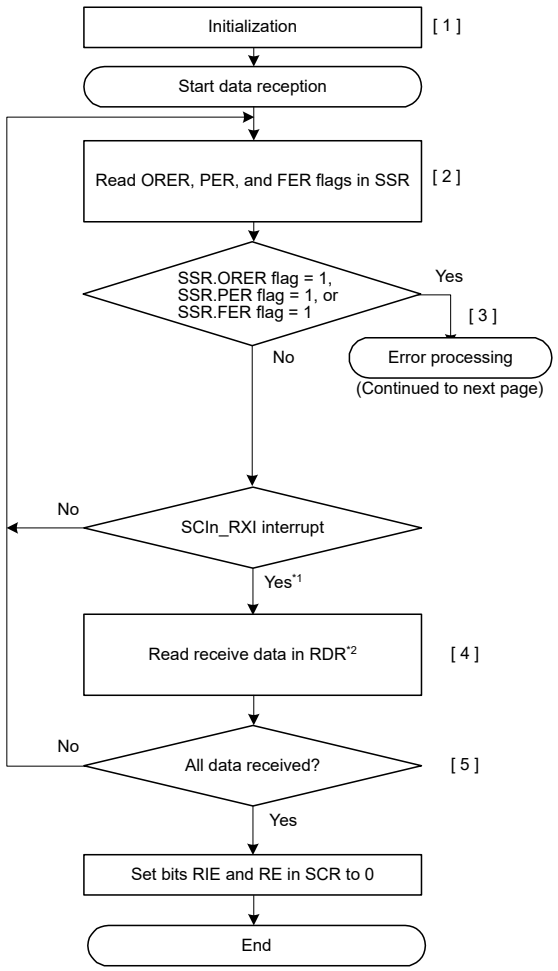

[1] SCI initialization:
Set data reception.

[2][3] Receive error processing and break detection:
If a receive error occurs, an SCIn_ERI interrupt is generated. The error type is identified by reading the ORER, PER, and FER flags in SSR. After performing the appropriate error processing, be sure to set the ORER, PER, and FER flags to 0. Reception cannot be resumed if any of these flags is set to 1. For a framing error, a break can be detected by reading the value of the input port associated with the RXDn pin.

[4] Read the receive data in RDR once inthe SCIn_RXI interrupt handling routine.

[5] To continue serial reception, before the stop bit of the current frame is received, read data from RDR in the SCIn_RXI interrupt processing routine. The RDR data can also be read by activating the DMAC or DTC.

Note 1. Do not set RE to 0 before reading RDR.
Note 2. The RDR register becomes the RDRHL register when 9-bit data length is selected.

Figure 25.21 Example flow of serial reception in asynchronous mode with non-FIFO selected and Address Matching Disabled (1)

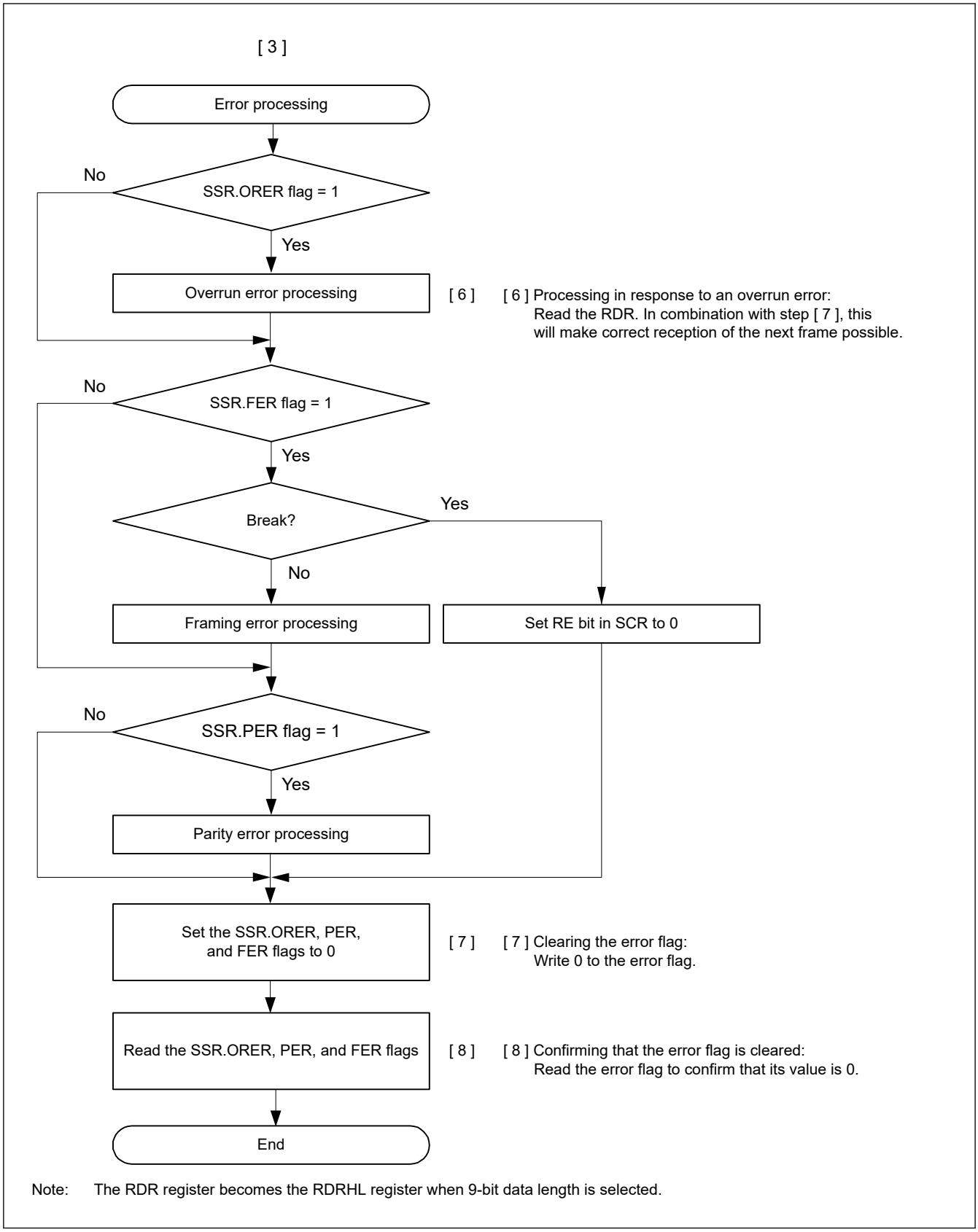

Figure 25.22 Example flow of serial reception in asynchronous mode with non-FIFO selected and Address Matching Disabled (2)

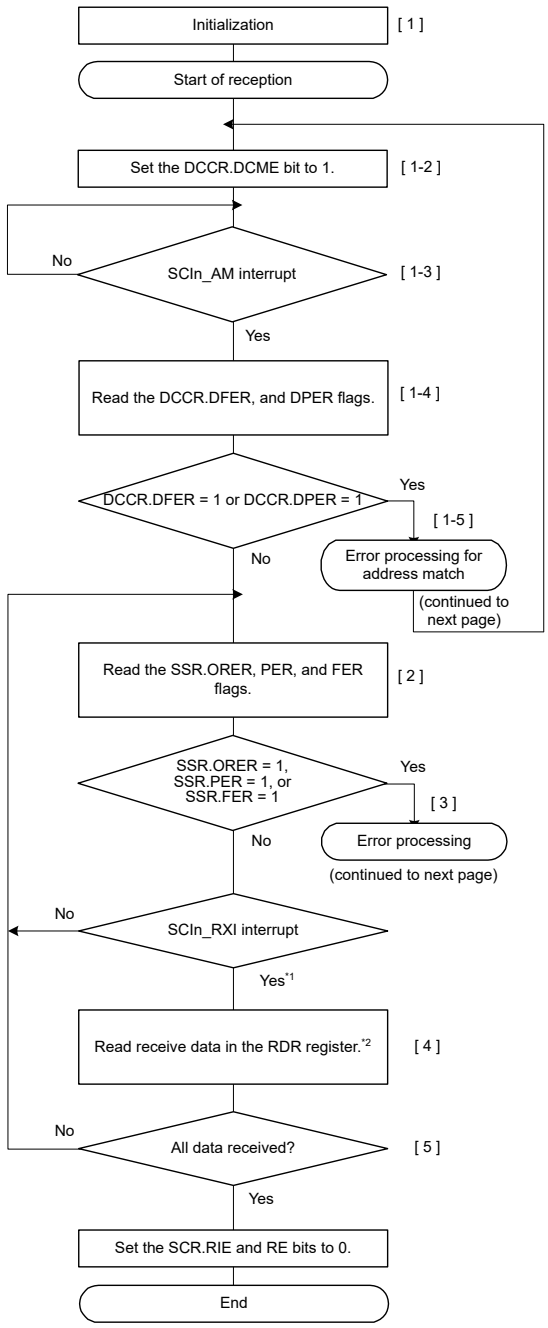

[1] SCI initialization:
Set data reception.

[1-2] Address match cycle:
Set the DCCR.DCME bit to 1 to enable address matching.

[1-3] Comparing receive data and data for comparison (CDR.CMPD):
Compare receive data and data for comparison (CDR.CMPD).
The SCI cannot detect a parity or framing error as receive data are skipped (discarded) until the SCI detects a match between the receive data and data for comparison.
If the SCI detects an address match, the DCCR.DCME bit is cleared, the DCCR.DCMF flag becomes 1, and an SCIn_AM interrupt request is issued.

[1-4] [1-5] Reception error processing:
An error is identified by reading the DFER or DPER flag in DCCR in the SCIn_AM interrupt handling routine.
After appropriate handling of the error, set both the DFER and DPER flags to 0.
If either of these flags is set to 1, address matching cannot be resumed.

[2] [3] Reception error processing and break detection:
When a reception error occurs, the SCIn_ERI interrupt is generated.
The error is identified by reading the ORER, PER, and FER flags in the SSR.
After appropriate handling of the error, set all of the ORER, PER, and FER flags to 0. If any of these flags is set to 1, reception cannot be resumed.
If a framing error occurs, a break can be detected by reading the value of the input port bit corresponding to the RXDn pin.

[4] Read the receive data in the RDR register from within the SCIn_RXI interrupt handling routine.

[5] Procedure for continuing serial reception:
To continue serial reception, read the value of the RDR register in the SCIn_RXI interrupt handling routine before the stop bit is received.
The value of the RDR register can also be read by activating the DMAC or DTC.

Note 1. Be sure to set the RE bit to 0 before reading the RDR register.
Note 2. The RDRHL register is used instead of the RDR register when the 9-bit data length is selected.

Figure 25.23 Example Flowchart of Serial Reception in Asynchronous Mode (FIFO not Selected and Address Matching Enabled) (1)

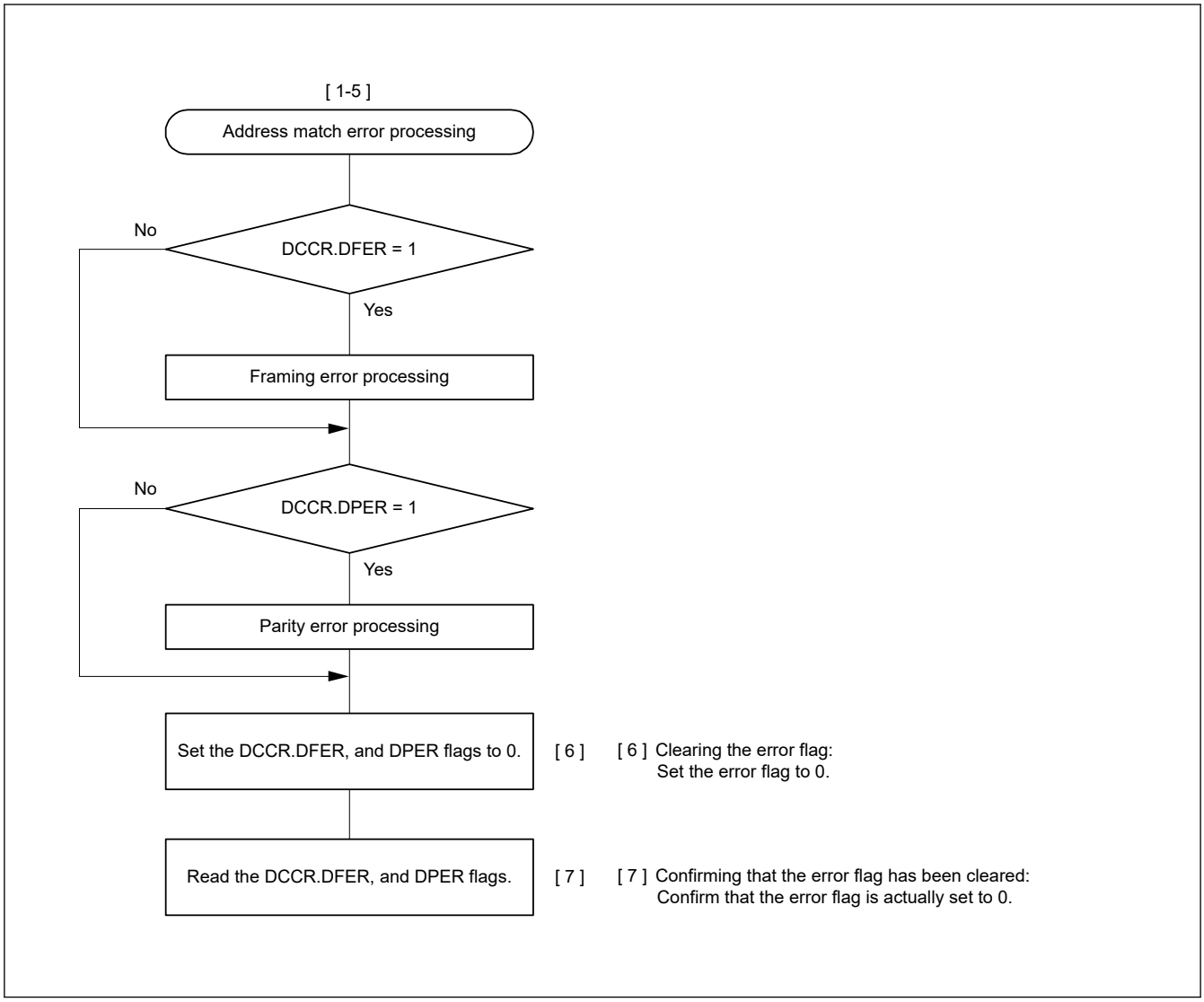

Figure 25.24 Example Flowchart of Serial Reception in Asynchronous Mode (FIFO not Selected and Address Matching Enabled) (2)

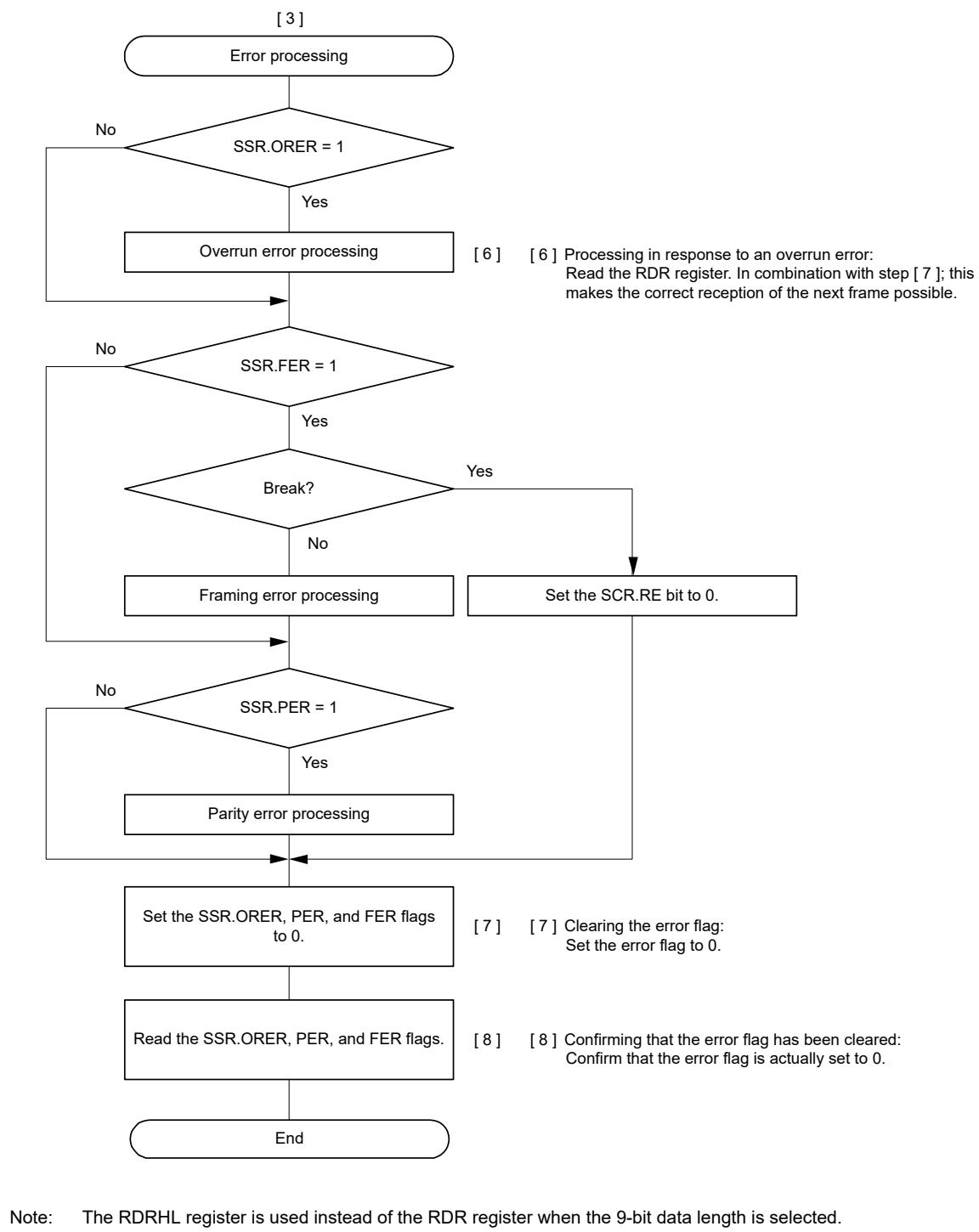

Note: The RDRHL register is used instead of the RDR register when the 9-bit data length is selected.

Figure 25.25 Example Flowchart of Serial Reception in Asynchronous Mode (FIFO not Selected and Address Matching Enabled) (3)

(2) FIFO selected

Figure 25.26 shows an example of a data format that is written to FRDRH register and FRDRL register in asynchronous mode.

In asynchronous mode, 0 is written to the MPB bit in the FRDRH register. Data that corresponds to the data length is written to FRDRH and FRDRL. Unused bits are written as 0. Read in order from FRDRH to FRDRL. If software reads FRDRL, the

SCI updates FER, PER, and receive data (RDAT[8:0]) in the FRDRL register with the next data. The flags RDF, ORER, and DR in the FRDRH register always reflect the associated flags in the SSR_FIFO register.

Data Length	Register Setting		Receive data in FRDRH, FRDRL															
			FRDRHL															
			FRDRH								FRDRL							
	SCMR. CHR1	SMR. CHR	b15	b14	b13	b12	b11	b10	b9	b8	b7	b6	b5	b4	b3	b2	b1	b0
7 bits	1	0	–	RDF	ORER	FER	PER	DR	0	0	0	7-bit receive data						
8 bits	1	1	–	RDF	ORER	FER	PER	DR	0	0	8-bit receive data							
9 bits	0	Don't care	–	RDF	ORER	FER	PER	DR	0	9-bit receive data								

Note: 0 is always read for MPB bit (FRDRH[1])
When data length is 7 bits, 0 is always read for FRDRH[0] and FRDRL[7]
When data length is 8 bits, 0 is always read for FRDRH[0]
FRDRH[7] bit is read as an indefinite value

Figure 25.26 Data format stored in FRDRH and FRDRL with FIFO selected

In serial data reception, the SCI operates as follows:

1. When the value of the SCR.RE bit becomes 1, the output signal on the CTSn_RTSn pin goes low.
2. The SCI monitors the communications line and, when it detects a start bit, the SCI performs internal synchronization, stores receive data in the RSR register.
3. If the multi-processor communications function is enabled (SMR.MP = 1), see section 25.4.2. Multi-Processor Serial Data Reception. If the address match function (data compare match function) is enabled (DCCR.DCME = 1), the SCI cannot detect a parity or framing error as receive data are skipped (discarded) until the SCI detects a match between the receive data and the data for comparison (CDR.CMPD[*1]).
4. If the SCI detects an address match, the DCCR.DCME bit is automatically cleared, the DCCR.DCMF flag becomes 1, and an SCIn_AM interrupt[*2] request is generated. To enable the generation of an SCIn_RXI interrupt request, set the SCR.RIE bit to 1. The compared receive data are not stored in the RDR register[*3]. The SSR.RDRF flag remains 0.
5. If the SCI detects a framing error in the receive data for which an address match was detected, the DCCR.DFER flag is set to 1, and if the SCI detects a parity error in that frame, the DCCR.DPER flag becomes 1. To enable the generation of an SCIn_ERI interrupt request, set the SCR.RIE bit to 1.
6. If a framing or a parity error is detected (the DCCR.DFER flag or DCCR.DPER flag is 1) in the SCIn_AM interrupt handling routine, set the DCCR.DFER and DCCR.DPER flags to 0 and set the DCCR.DCME bit to 1 to enable the address match function again. If neither a framing nor a parity error has been detected (the DCCR.DFER and DCCR.DPER flags are 0), set the DCCR.DCMF flag to 0. See Figure 25.10.
7. If an overrun error occurs during normal communications, the SSR_FIFO.ORER flag is set to 1. If the SCR.RIE bit in SCR is 1, an SCIn_ERI interrupt request is generated. Receive data is not transferred to the FRDRL[*3] register.
8. If a parity error is detected, the PER flag and receive data are transferred to the FRDRL[*3] register. If the SCR.RIE bit is set to 1, an SCIn_ERI interrupt request is generated.
9. If a framing error is detected, the FER flag and receive data are transferred to the FRDRL[*3] register. If the SCR.RIE bit is set to 1, an SCIn_ERI interrupt request is generated.
10. After a framing error is detected and when SCI detects that the continuous receive data is zero for one frame, reception stops.
11. When the amount of data stored in the FRDRL register falls below the specified receive triggering number, and the next data is not received after 15 etus from the last stop bit in asynchronous mode, the SSR_FIFO.DR flag is set to 1. When the SCR.RIE bit is 1 and the FCR.DRES bit is 0, the SCI generates an SCIn_RXI interrupt request. When the FCR.DRES bit is 1, SCI generates an SCIn_ERI interrupt request.

12. When reception finishes successfully, receive data is transferred to the FRDRL[*3] register. The RDF bit is set to 1 when the amount of receive data written to FRDRHL is equal to or greater than the specified receive triggering number. If the SCR.RIE bit in SCR is 1, an SCIn_RXI interrupt request is generated. Continuous reception is enabled by reading the receive data transferred to the FRDRL[*4] register in the SCIn_RXI interrupt handling routine, before an overrun error occurs. If the received data that is transferred to FRDRL[*5] is less than the RTS trigger number, the CTSn_RTSn pin outputs low.

Note 1. One of three lengths is selected for the target for comparison: CMPD[6:0] is for 7-bit length, CMPD[7:0] is for 8-bit length, and CMPD[8:0] is for 9-bit length.
Note 2. As no interrupt enable bit is assigned to the SCIn_AM interrupt, an interrupt request is generated by setting the DCCR.DCMF to 1.
Note 3. Only read data in the FRDRH and FRDRL registers when 9-bit data length is selected.
Note 4. Read data in order from FRDRH to FRDRL when 9-bit data length is selected.
Note 5. The SCI only checks for update to the FRDRL register and not to the FRDRH register when 9-bit data length is selected.

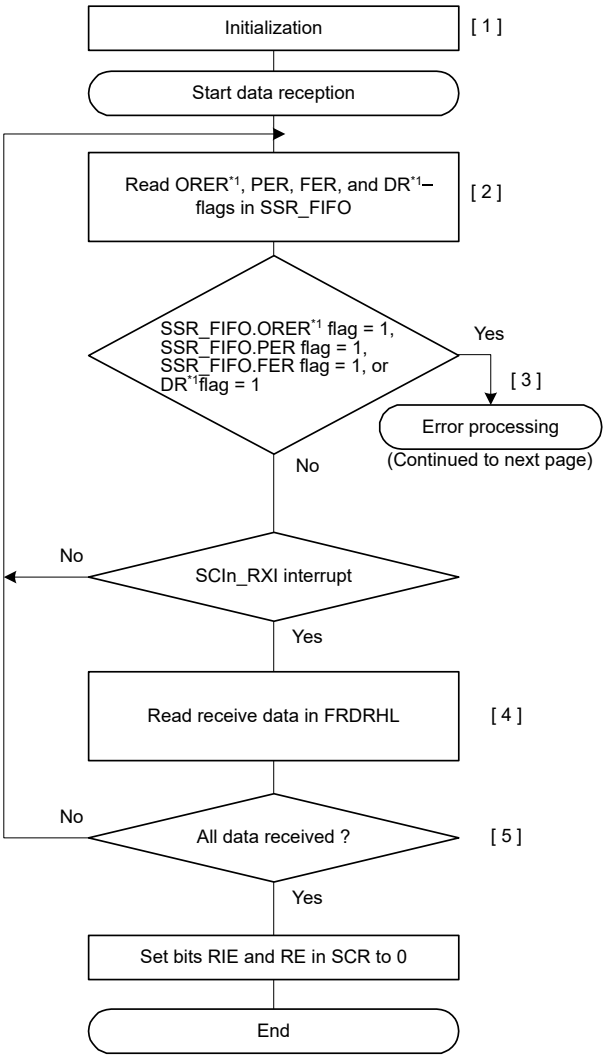

[1] SCI initialization:
Set data reception.

[2] [3] Receive error processing and break detection:
If a receive error occurs, an SCIn_ERI interrupt is generated. A break can be detected by reading the SPTR.RXDMON flag. An error is identified by reading the ORER[*1], PER, DR[*1], and FER flags in SSR_FIFO. After performing the appropriate error processing, be sure to set the ORER[*1] flag to 0. Reception cannot be resumed if ORER[*1] flag is set to 1. The reception operation is continuous, even if the FER = 1 or PER = 1 or DR[*1] = 1.

[4] Read the receive data in FRDRHL in the SCIn_RXI interrupt handling routine. The receive data stored in the FRDRHL register is read until the number of stored data is below the FCR.RTRG value. Confirm the number of the reception data in the FIFO by reading FDR.R.

[5] Serial reception continuation procedure:
To continue serial reception, before an overrun error occurs, read data from FRDRHL in the SCIn_RXI interrupt handling routine and clear RDF flag and DR flag to 0.
The FRDRHL data can also be read by activating the DMA or DTC. The RDF flag is cleared automatically in this case, so do not write to the RDF flag.

Note 1. Can be read in the FRDRHL.ORER and DR flags.

Figure 25.27 Example flow of serial reception in asynchronous mode with FIFO selected and Address Matching Enabled (1)

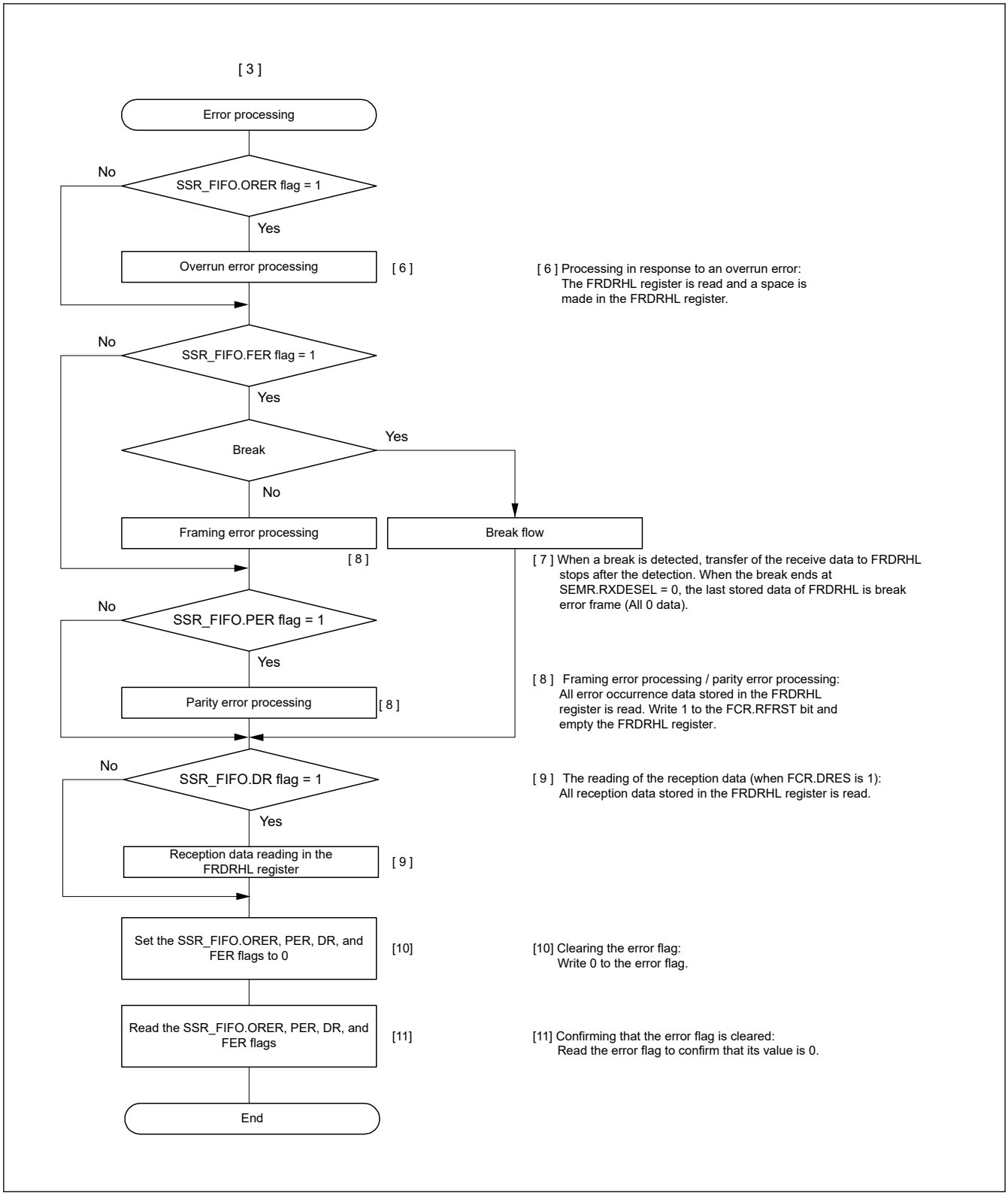

Figure 25.28 Example flow of serial reception in asynchronous mode with FIFO selected Address Matching Disabled (2)

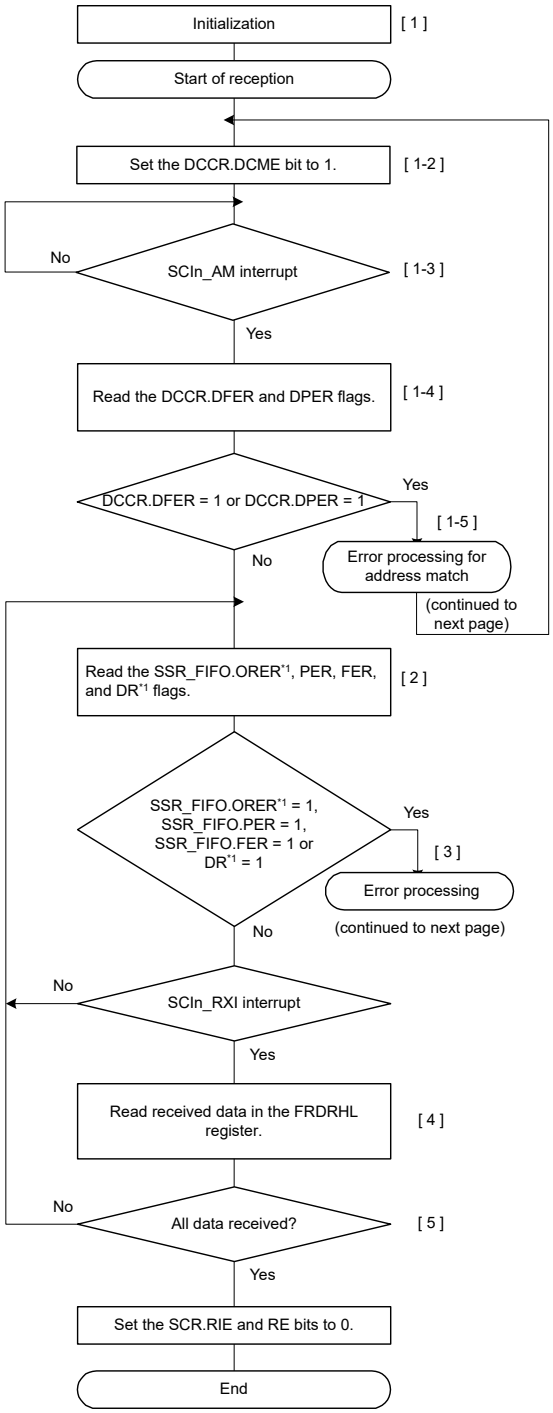

[1] SCI initialization:
Set data reception.

[1-2] Address match cycle:
Set the DCCR.DCME bit to 1 to enable address matching.

[1-3] Comparing received data and data for comparison (CDR.CMPD):
Compare receive data and comparison data.
The SCI cannot detect a parity or framing error as received data are skipped (discarded) until the SCI detects a match between the received data and data for comparison.
If the SCI detects an address match, the DCCR.DCME bit is cleared, the DCCR.DCMF flag becomes 1, and an SCIn_AM interrupt request is issued.

[1-4] [1-5] Reception error processing:
An error is identified by reading the DFER or DPER flag in DCCR from within the SCIn_AM interrupt handling routine.
After appropriate handling of the error, set both the DFER and DPER flags to 0.
If either of these flags is set to 1, address matching cannot be resumed.

[2] [3] Reception error processing and break detection:
When a reception error occurs, an SCIn_ERI interrupt is generated.
A break is identified by reading SPTR.RXDMON.
The error is identified by reading each among the SSR_FIFO.ORER*1, PER, FER, and DR*1 flags.
After appropriate handling of the error, set the ORER*1 flag to 0.
If the ORER*1 flag remains 1, reception cannot be resumed.
The reception operation is continuous, even if the FER = 1, PER = 1 or DR*1 = 1.

[4] Reading the received data in the FRDRHL register from within the SCIn_RXI interrupt handling routine:
The received data stored in the FRDRHL register are read until the amount of stored data is less than the value of the FCR.RTRG[3:0] bits.
Confirm the number of received data in the FIFO with the value of the FDR.R[4:0] bits.

[5] Serial reception continuation procedure:
To continue with serial reception, read data from the FRDRHL register from within the SCIn_RXI interrupt handling routine before an overrun error occurs, and set the RDF and DR flags to 0. The data in the FRDRHL register can also be read by activating the DMAC or DTC. In this case, do not write to the RDF flag because the flag is automatically cleared.

Note 1. The FRDRHL.ORER and DR flags can also be read.

Figure 25.29 Example Flowchart of Serial Reception in Asynchronous Mode (FIFO Selected and Address Matching Enabled) (1)

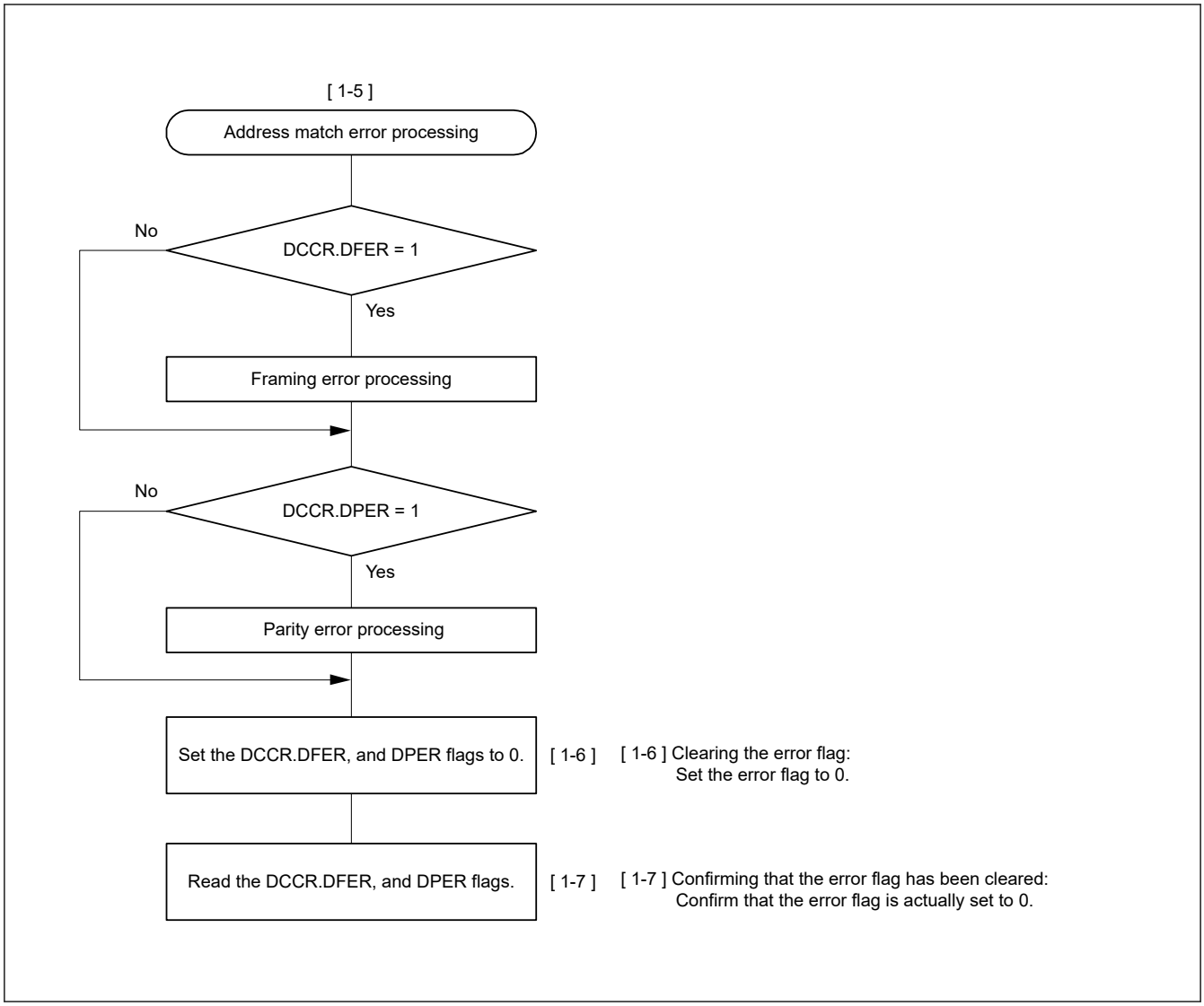

Figure 25.30 Example Flowchart of Serial Reception in Asynchronous Mode (FIFO Selected and Address Matching Enabled) (2)

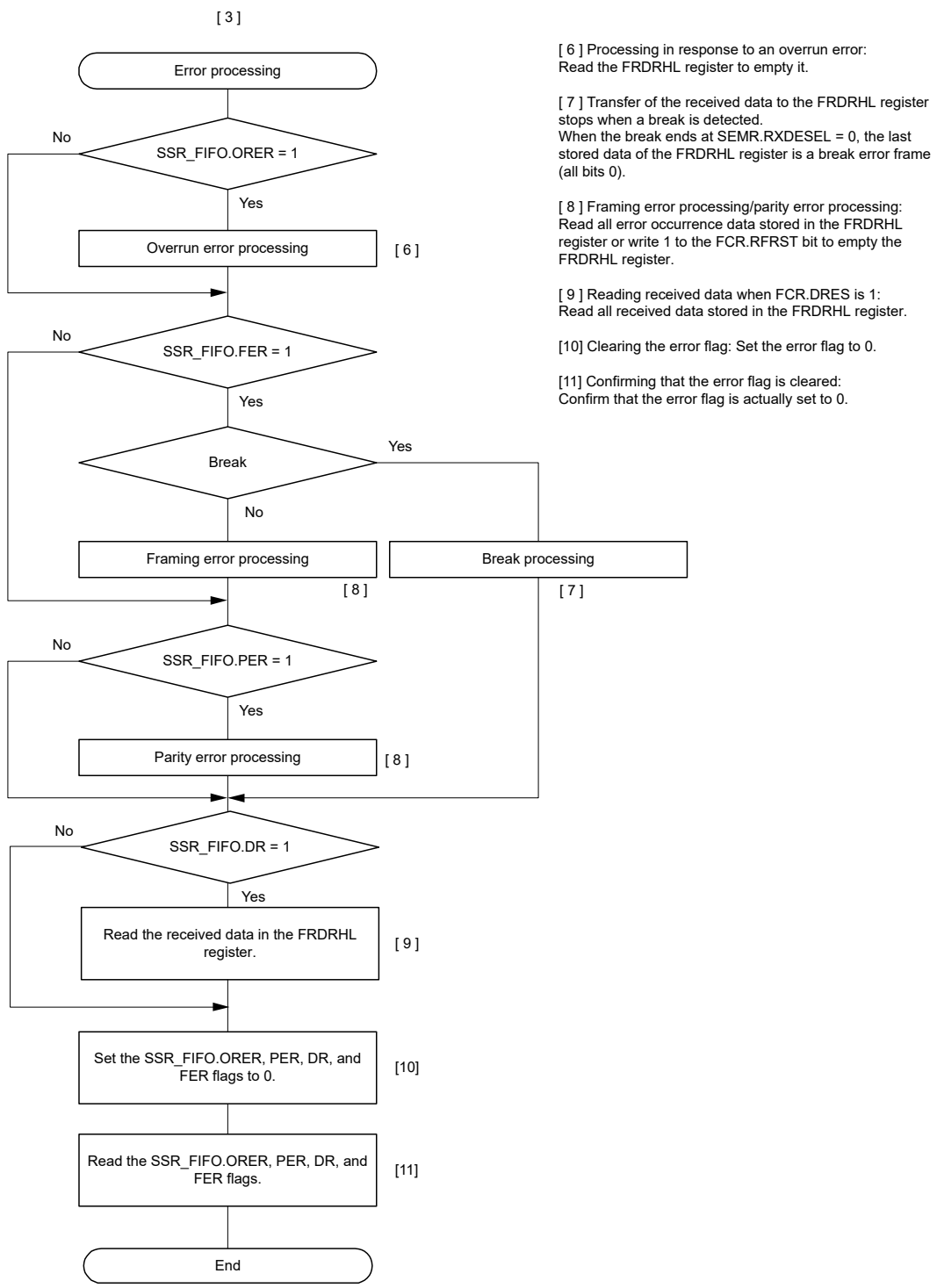

Figure 25.31 Example Flowchart of Serial Reception in Asynchronous Mode (FIFO Selected and Address Matching Enabled) (3)

25.3.10 The function of adjust receive sampling timing (Asynchronous Mode)

When there is the difference between the rising transfer time and the falling transfer time through a photo coupler, the receive sampling timing at middle of bit affects the reception margin. In this case, the receive sampling timing is able to adjust from the middle of bit to the optimum timing by using this function.

The receive sampling timing is adjusted from the middle of bit by following formula. The adjustable direction is set by ACTR.AJD. When adjusting backward (ACTR.AJD = 0), substitute AJD = +1 and substitute AJD = −1 when adjusting forward (ACTR.AJD = 1).

Adjusted sampling timing = the middle of bit + AJD × (base clock × the setting value of ACTR.AST[2:0])

The setting timing is limited by base clock cycles per 1 bit. For details, see Table 25.31.

An overview of reception operation of the communication through a photo coupler with this function is shown in Figure 25.32, Figure 25.33 and Figure 25.34, the explanation of operation with this function is shown in Figure 25.35.

Do not use this function when there is no difference between the rising transfer time and the falling transfer time, because there is a possibility of deteriorating the reception margin.

Table 25.31 The acceptable value of ACTR register (asynchronous mode using internal clock)

SEMR.ABCSE	SEMR.ABCS	The number of base clock cycles/1bit	The acceptable value of ACTR	
			ACTR.AJD	ACTR.AST
1	x	6	0	000b – 010b[*1]
			1	
0	1	8	0	000b – 011b[*1]
			1	
0	0	16	0	000b – 111b
			1	

Note: x: Don't care
Note 1. When the value of ACTR.AST exceeds the acceptable value, sampling is done at default timing. (Adjustment of sampling is not done.)

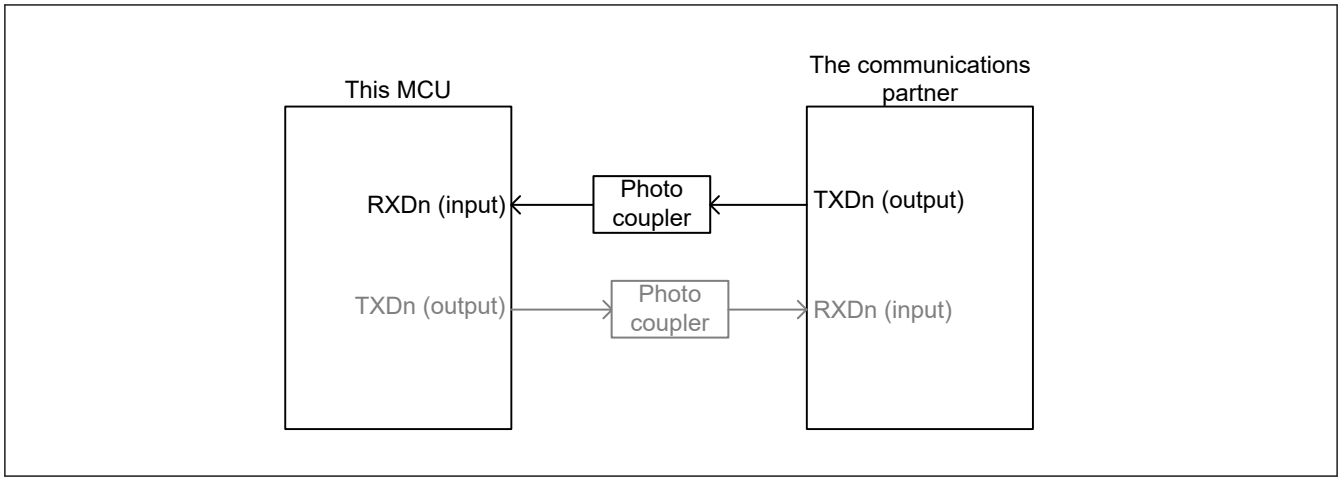

Figure 25.32 Block diagram image of the reception through a photo coupler

(a) In the case of the falling transfer time >> rising transfer time

The falling edge of reception waveform is made dull like following chart.
In this case, you can sampling at the middle of bit if you adjust the receive sampling timing to forward (AJD = 1).

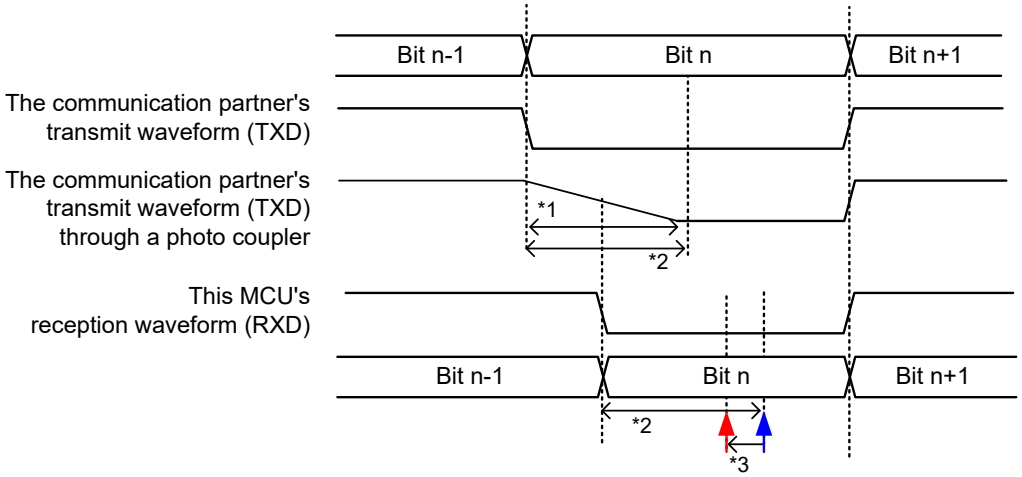

(b) In the case of the falling transfer time << rising transfer time

The rising edge of reception waveform is made dull like following chart.
Thus, the reception margin of communications partner will be bad. In this case, you can improve the reception margin if you adjust the receive sampling timing to back.

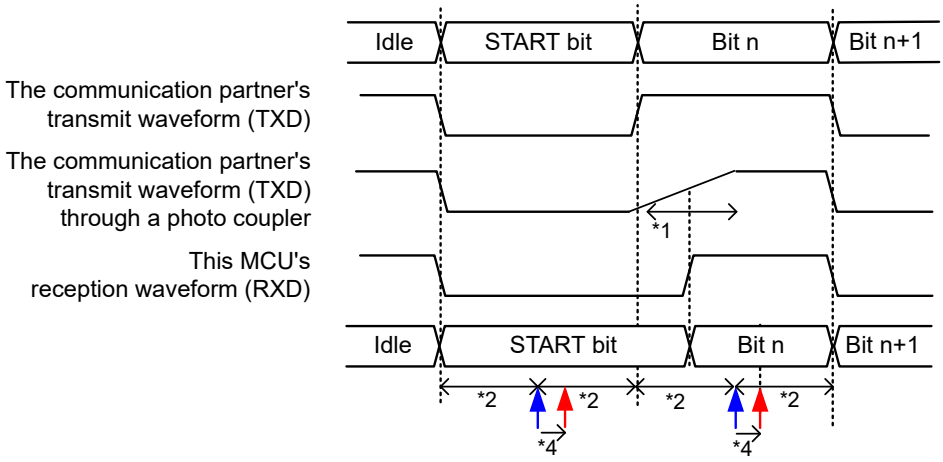

The receive sampling timing when unadjusted (middle of bit)

The adjusted receive sampling timing

Note: This waveform shows the operation image of adjustment in reception sampling timing.
Note 1. The dull period by a photo coupler
Note 2. Bit center timing at set communication rate
Note 3. When ACTR.AJD is 1, the receive sampling timing is shifted to forward by the setting value of ACTR.AST[2:0].
Note 4. When ACTR.AJD is 0, the Receive sampling timing is shifted to backward by the setting value of ACTR.AST[2:0].

Figure 25.33 Overview of reception operation of the communication through a photo coupler

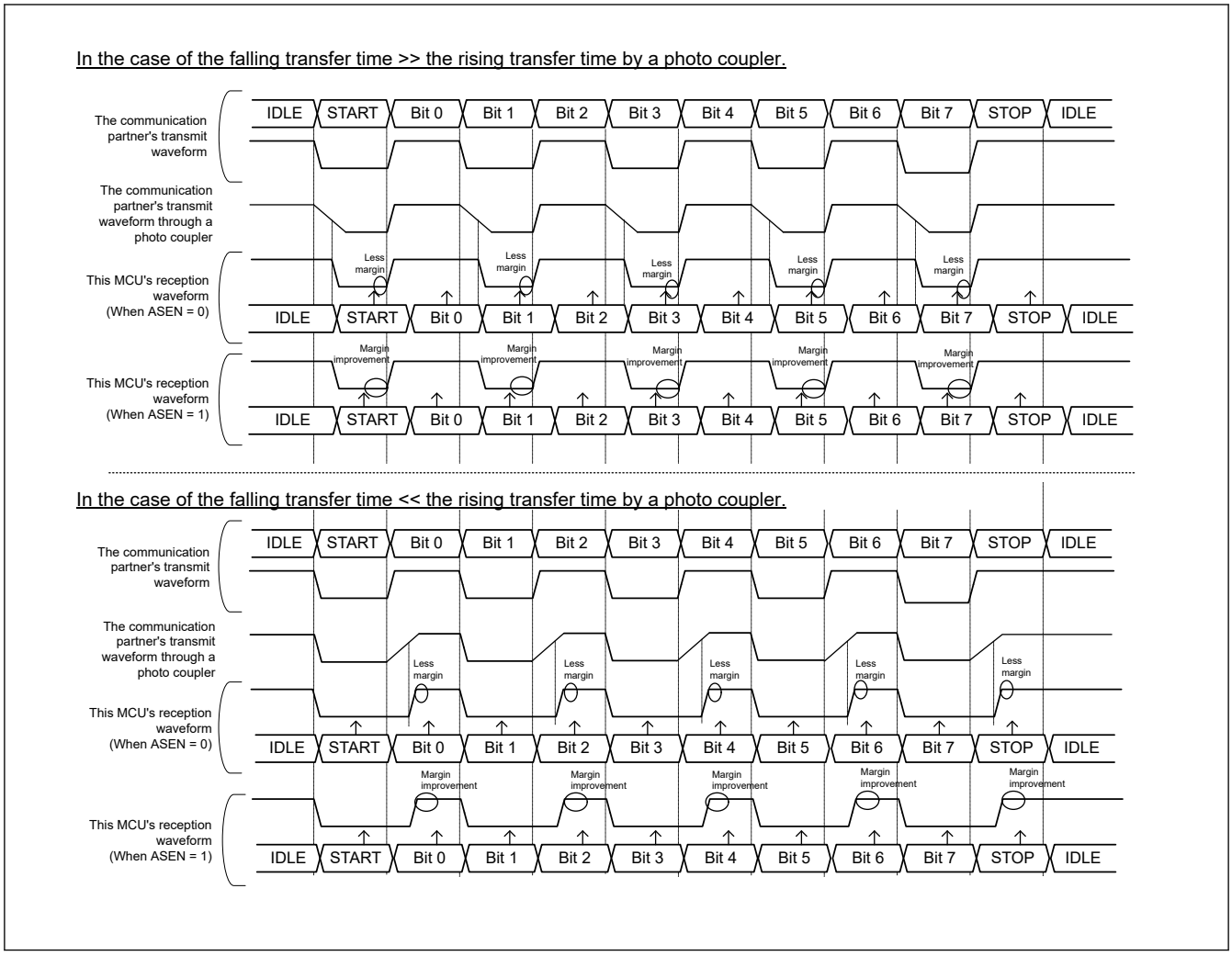

Figure 25.34 Example of improvement in reception margin by the reception sampling timing adjustment function

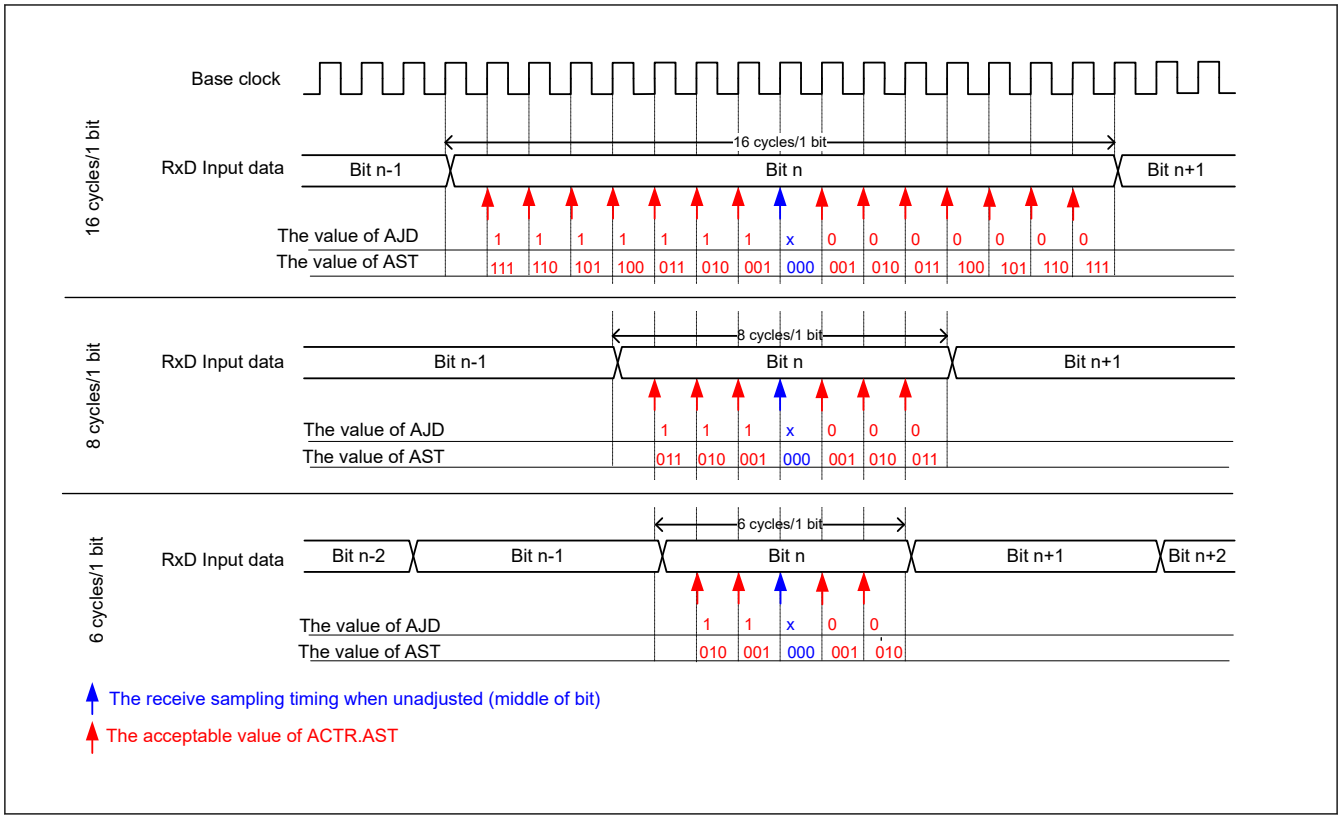

Figure 25.35 Overview of the adjustment operation for the reception sampling timing (asynchronous mode using internal clock)

25.3.11 The function of adjust transmit timing (Asynchronous Mode)

In communication via a photo coupler or the like, when either the rising or falling transition time of the TXDn output signal is long, then a communication partner receive dulled waveform. In this case, the reception margin may be affected.

In these cases, make a communication partner to be sampling at middle of bit using the function of adjust transmit timing.

When SPTR.ATEN is 1, this function can adjust the edge timing at the timing calculated by the following formula for the edge set with ACTR.AET.

The adjustment edge timing = the base clock × ACTR.ATT[2:0]

In addition, the upper limit of the adjustment edge timing is limited by setting the base clock cycles. For details, see Table 25.32.

A transmission movement image figure of the communication through a photo coupler with this function is shown in Figure 25.36, Figure 25.37 and Figure 25.38, the overview of operation with this function is shown in Figure 25.39 and Figure 25.40.

Do not use this function when there is not the difference between the rising transfer time and the falling transfer time, there is a possibility of deteriorating the reception margin of a communication partner.

Table 25.32 The acceptable value of ACTR.AET and ACTR.ATT (asynchronous mode using internal clock) (1 of 2)

ABCSE	ABCS	The number of base clock cycles/1bit	The acceptable value of ACTR	
			AET	ATT[2:0]
1	x	6	0	000b – 101b
			1	
0	1	8	0	000b – 111b
			1	

Table 25.32 The acceptable value of ACTR.AET and ACTR.ATT (asynchronous mode using internal clock) (2 of 2)

ABCSE	ABCS	The number of base clock cycles/1bit	The acceptable value of ACTR	
			AET	ATT[2:0]
0	0	16	0	000b – 111b
			1	

Note: x: Don't care
Note: When the value of ACTR.AET/ATT is out of the acceptable value, this SCI module doesn't adjust transmit timing.

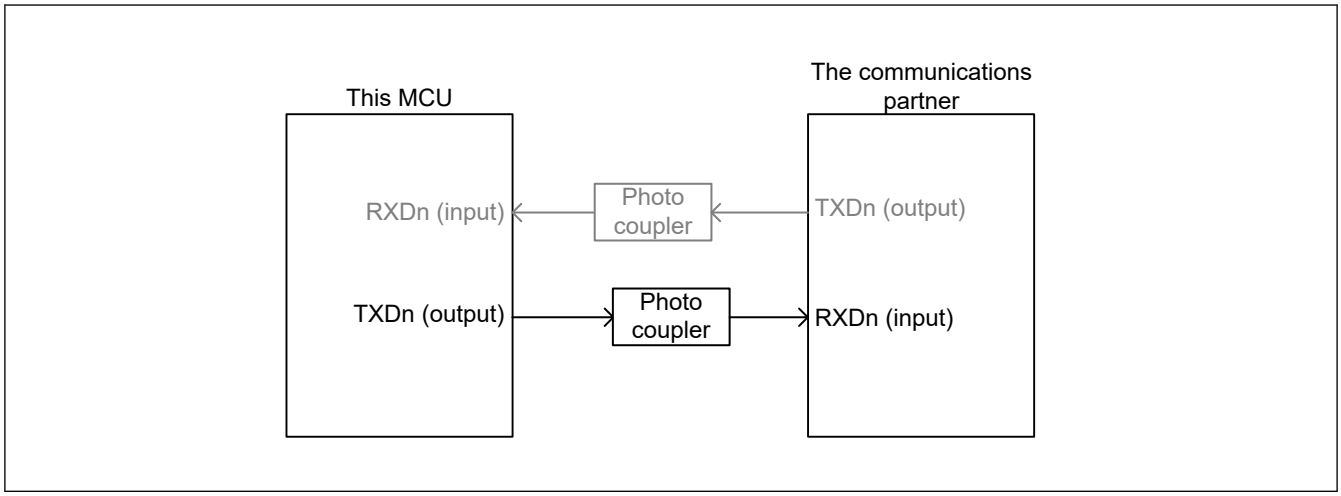

Figure 25.36 block diagram image of the transmission through a photo coupler

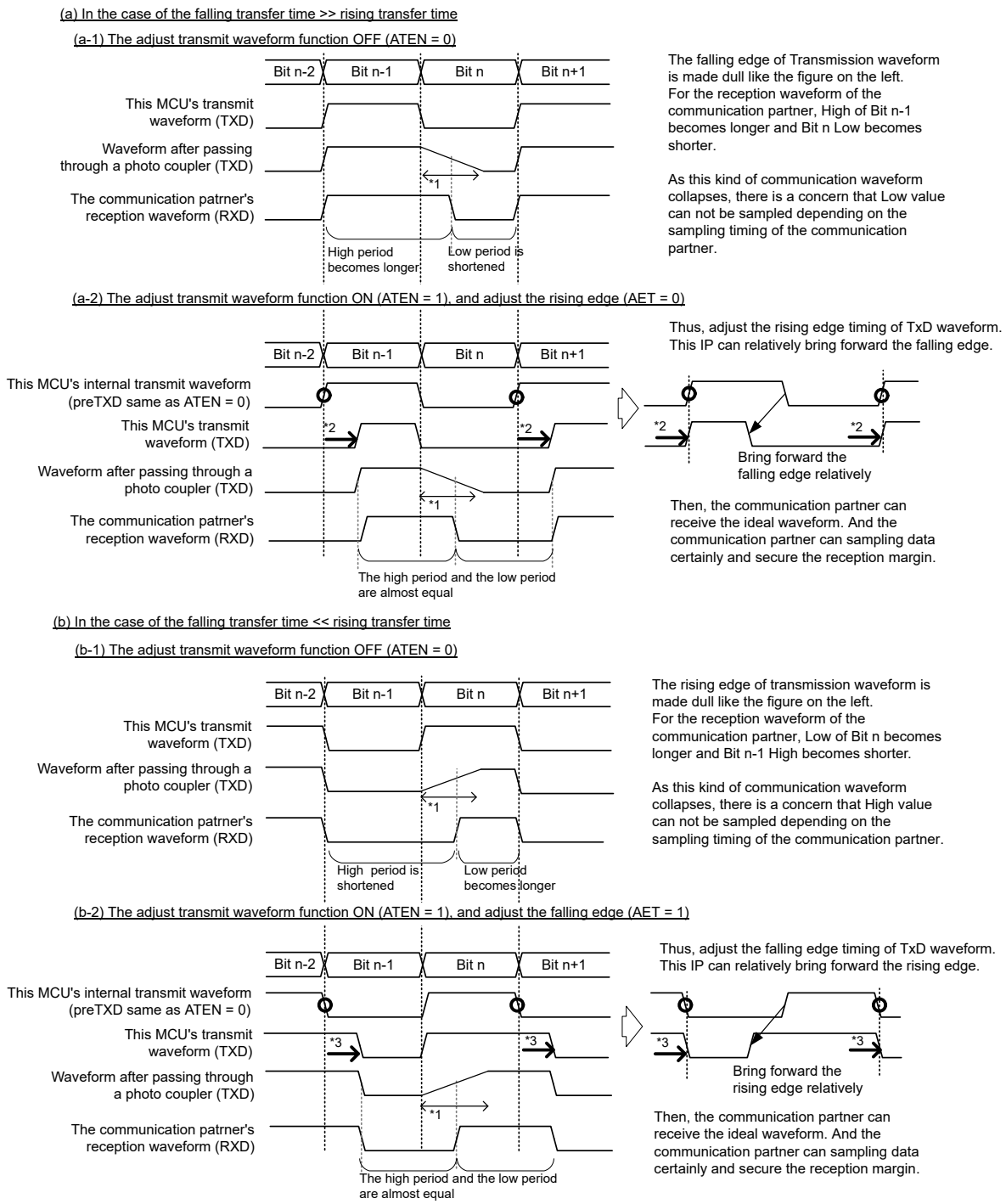

Note: This waveform shows the operation image of adjustment transmit waveform.
Note 1. The dull period by a photo coupler
Note 2. When ACTR.AET is 0, the rising edge of transmit waveform timing is shifted to back by the setting value of ACTR.ATT[2:0]. This IP transmit waveform bringing forward the falling edge relatively.
Note 3. When ACTR.AET is 1, the falling edge of transmit waveform timing is shifted to back by the setting value of ACTR.ATT[2:0]. This IP transmit waveform bringing forward the rising edge relatively.

Figure 25.37 The overview of transmission operation in the communication through a photo coupler

The explanation of transmit waveforms of the communication through a photo coupler using adjust transmit timing function

When using the transmission timing adjustment function, adjust the edge timing of the transmission waveform and correct the reception waveform of the communication partner

The following example is 8 bit long data.

(a) In the case of the falling edge transfer time >> the rising transfer time

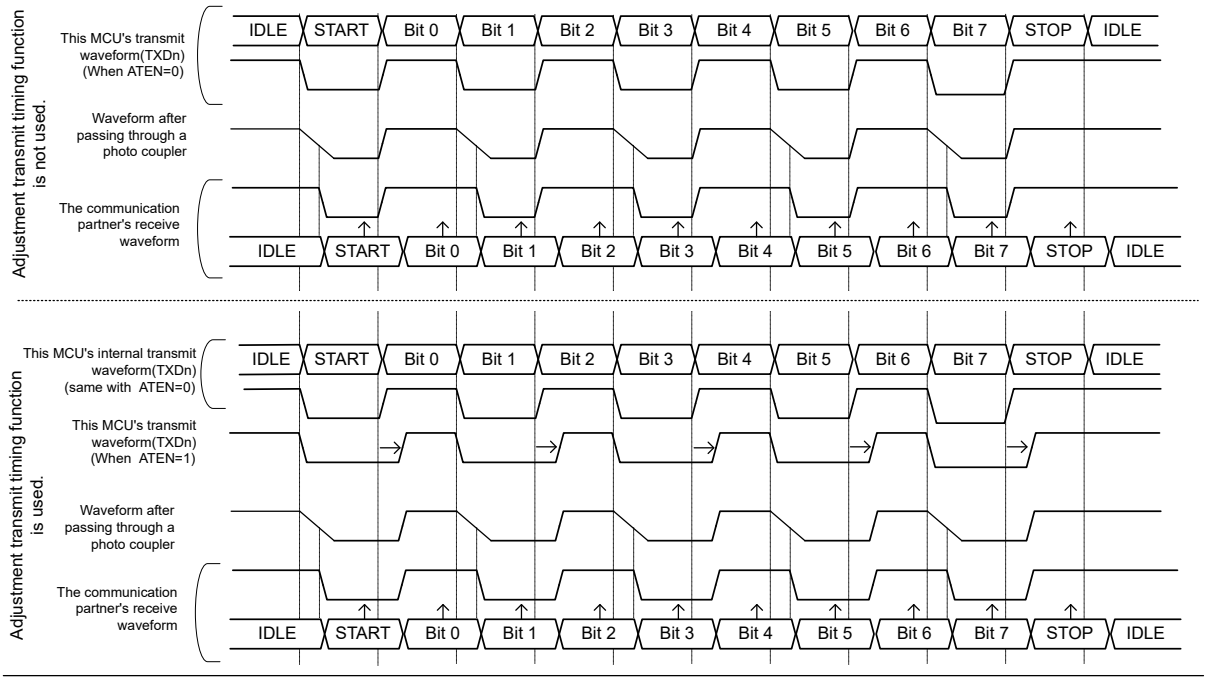

(b) In the case of the falling edge transfer time << the rising transfer time

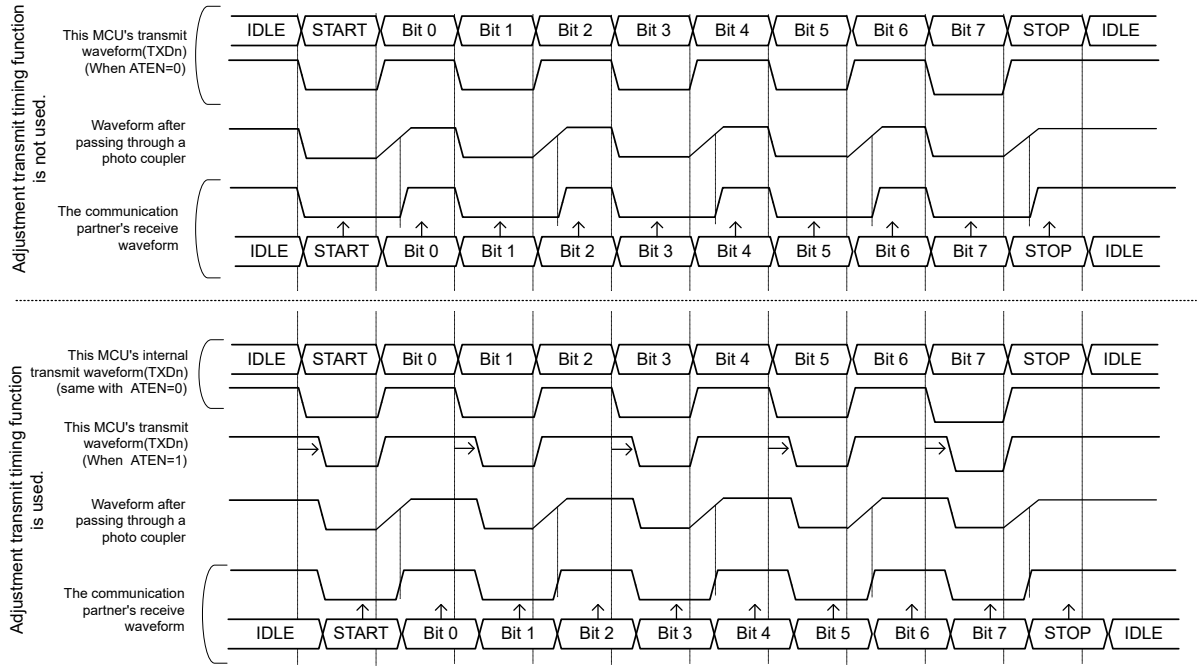

Figure 25.38 The explanation for the transmit waveform through a photo coupler

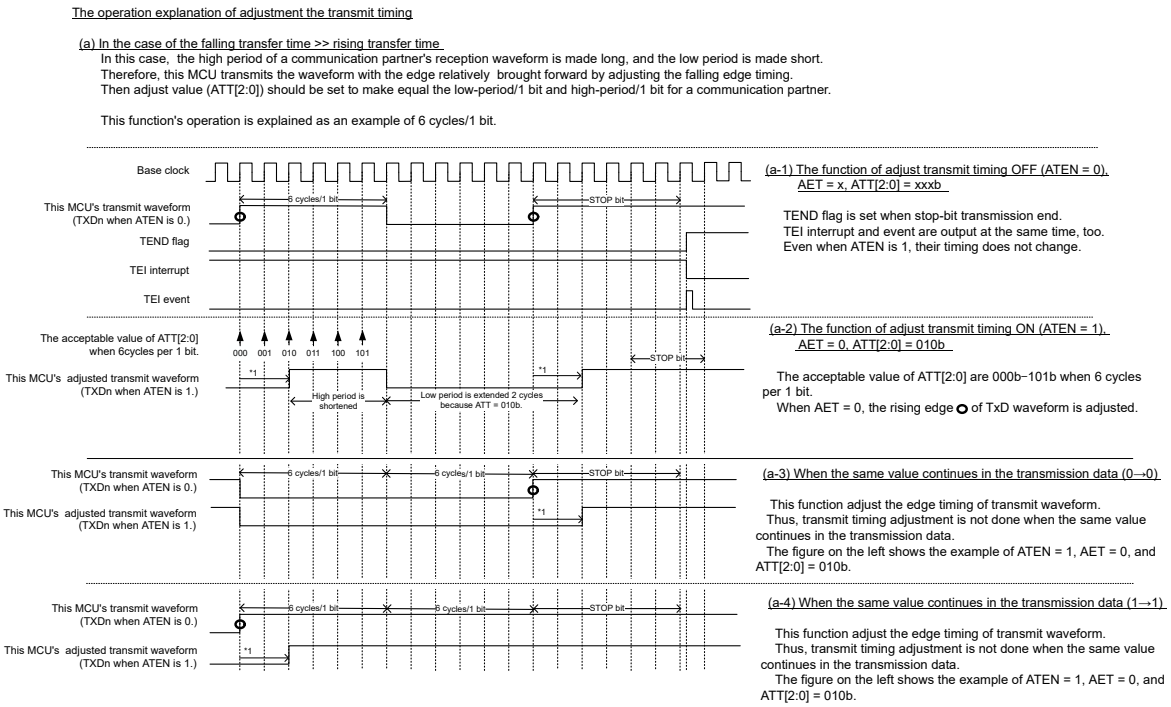

Note 1. The rising edge of transmit timing is shifted to back by the setting value of ACTR.ATT[2:0].

Figure 25.39 The adjustment operation explanation for the transmit timing when AET is 0

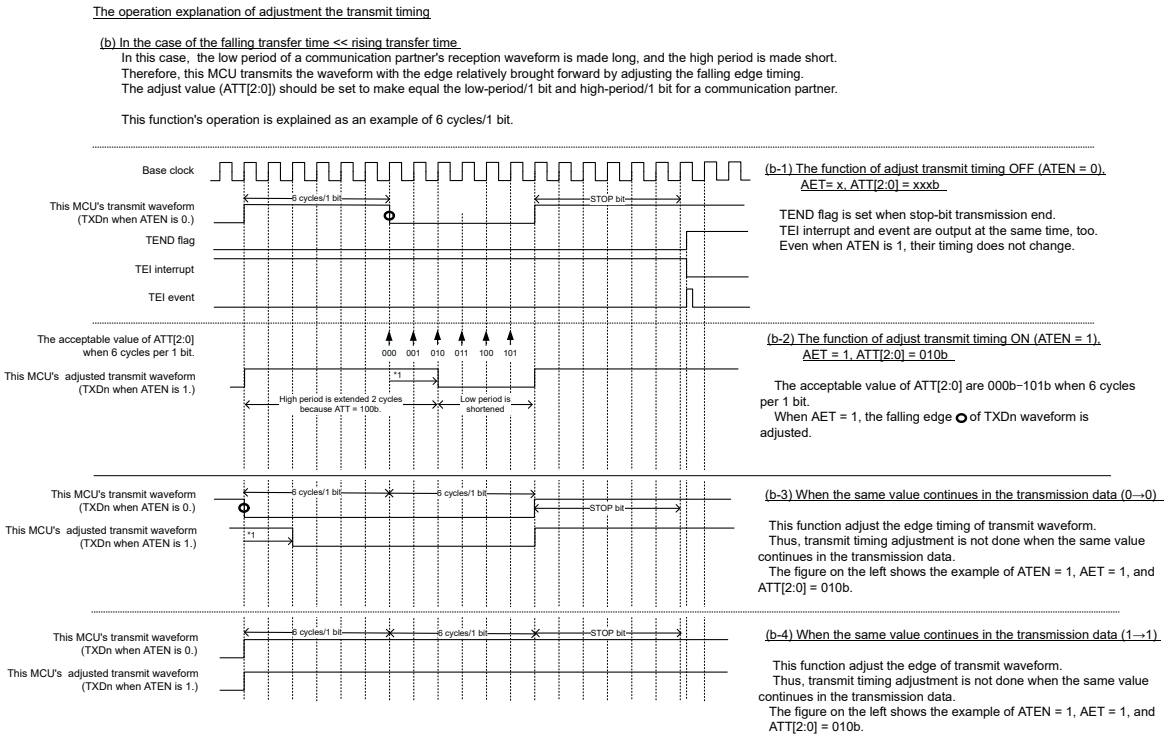

Note 1. The falling edge of transmit timing is shifted to back by the setting value of ACTR.ATT[2:0].

Figure 25.40 The adjustment operation explanation for the transmit timing when AET is 1

25.4 Multi-Processor Communication Function

The multi-processor communication function enables the SCI to transmit and receive data between multiple processors by sharing an asynchronous serial communication line that has an added multi-processor bit. In multi-processor communication, a unique ID code is allocated to each receiving station. Serial communication cycles consist of an ID transmission cycle to specify the receiving station and a data transmission cycle to transmit data to the specified receiving station.

The multi-processor bit is used to distinguish between the ID transmission cycle and the data transmission cycle:

- When the multi-processor bit is set to 1, the transmission cycle is the ID transmission cycle
- When the multi-processor bit is set to 0, the transmission cycle is the data transmission cycle

Figure 25.41 shows an example of communication between processors using a multi-processor format. First, a transmitting station transmits communication data in which the multi-processor bit set to 1 is added to the ID code of the receiving station. Next, the transmitting station transmits communication data in which the multi-processor bit set to 0 is added to the transmit data. After receiving communication data with the multi-processor bit set to 1, the receiving station compares the received ID with the ID of the receiving station itself. If the two match, the receiving station receives communication data that is subsequently transmitted. If the received ID does not match with the ID of the receiving station, the receiving station skips the communication data until it receives data in which the multi-processor bit is set to 1.

(1) Non-FIFO selected

To support this function, the SCI provides the SCR.MPIE bit. When the MPIE bit is set to 1, the following operations are disabled until the reception of data in which the multi-processor bit is set to 1:

- Transfer of receive data from the RSR register to the RDR register (the RDRHL register when 9-bit data length is selected)
- Detection of a receive error
- Setting of the respective RDRF, ORER, and FER status flags in the SSR register

When the SCI receives a character in which the multi-processor bit is set to 1, the SSR.MPBT bit is set to 1 and the SCR.MPIE bit is automatically cleared, returning the SCI to normal reception operation. If the SCR.RIE bit is set to 1, an SCIn_RXI interrupt is generated.

When the multi-processor format is specified, the parity bit function is disabled. Apart from this, there is no difference from operation in normal asynchronous mode. The clock used for the multi-processor communication is the same as the clock used in normal asynchronous mode.

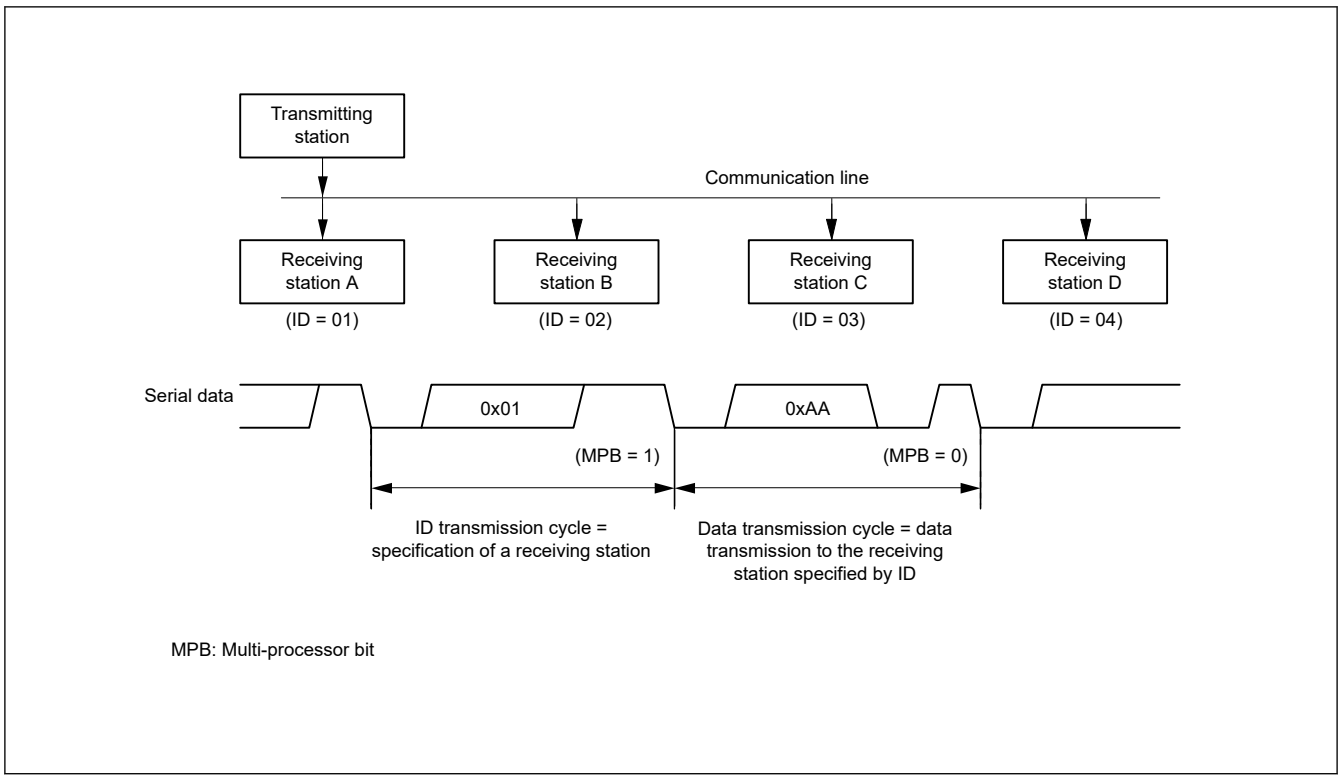

Figure 25.41 Example of communication using multi-processor format with transmission of data 0xAA to receiving station A

(2) FIFO selected

For data transmission, software must write data to FTDRHL.MPBT that corresponds to transmit data in FTDRHL.TDAT. For data reception, the multi-processor bit that is part of the receive data is written to FTDRHL.MPB and receive data is written to FRDRL.

When the MPIE bit is set to 1, the following operations are disabled until reception of data in which the multi-processor bit is set to 1:

- Transfer of receive data from the RSR register to the FRDRHL register
- Detection of a receive error
- Break
- Setting of the respective RDF, ORER, and FER status flags in the SSR_FIFO register

When the SCI receives an 8-bit character in which the multi-processor bit is set to 1, the FTDRHL.MPB bit is set to 1 and receive data is written to FRDRHL.RDAT. The SCR.MPIE bit is automatically cleared, returning the SCI to normal reception operation. If the SCR.RIE bit is set to 1, an SCIn_RXI interrupt is generated.

When the multi-processor format is specified, the parity bit function is disabled. Apart from this, there is no difference from operation in normal asynchronous mode with FIFO selected.

25.4.1 Multi-Processor Serial Data Transmission

(1) Non-FIFO selected

Figure 25.42 shows an example flow of multi-processor data transmission. In the ID transmission cycle, the ID must be transmitted with the SSR.MPBT bit set to 1. In the data transmission cycle, the data must be transmitted with the MPBT bit set to 0. The rest of the operations are the same as operations in asynchronous mode. Write the values in the order of the FTDRH register then the FTDRL register.

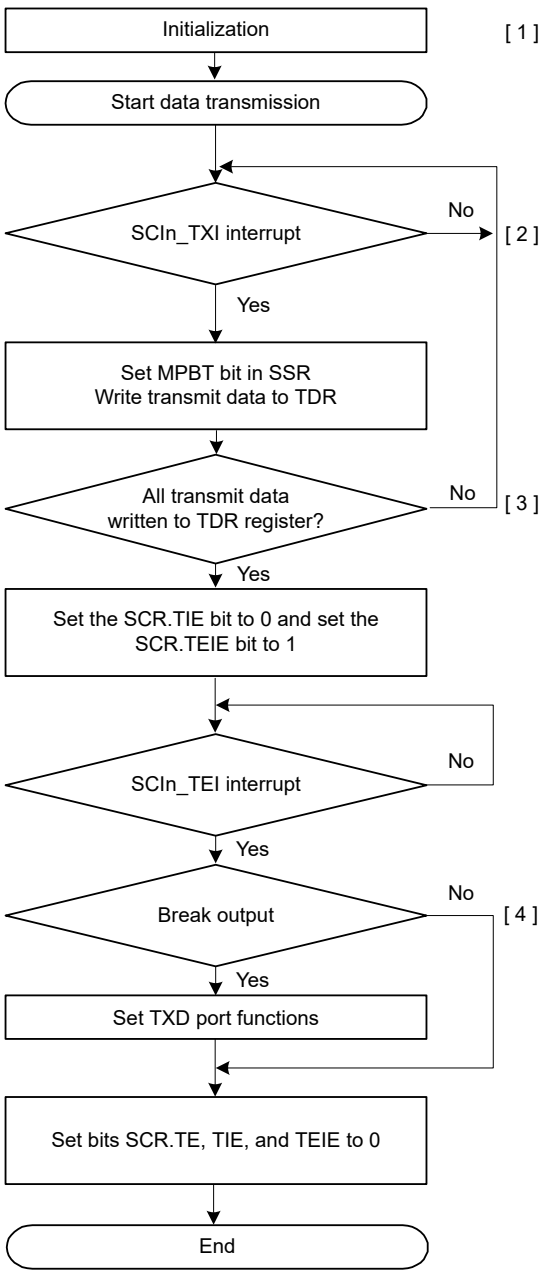

[1] SCI initialization:
Set data transmission.
After the SCR.TE bit is set to 1, 1 is output for a frame, and transmission is enabled.

[2] SCIn_TXI interrupt request:
When transmit data is transferred from TDR to TSR, a transmit data empty interrupt (SCIn_TXI) request is generated.
Set the MPBT bit in SSR to 0 or 1, and write transmit data to TDR once in the SCIn_TXI interrupt processing routine.

[3] Serial transmission continuation procedure:
To continue serial transmission, write transmit data to TDR once using an SCIn_TXI interrupt request.
Transmit data can also be written to TDR by activating the DMAC or DTC.
When SCIn_TEI interrupt requests are in use, set the SCR.TIE bit to 0 and the SCR.TEIE bit to 1 after the last of the data to be transmitted is written to the TDR.

[4] Break output at the end of serial transmission:
To output a break in serial transmission, after setting the output state (LOW level output) of TXD pin by SPTR.SPB2IO and SPTR.SPB2DT bits, set the SCR.TE bit to 0.

Figure 25.42 Example flow of multi-processor serial transmission with non-FIFO selected

(2) FIFO selected

Figure 25.43 shows an example of data format that is written to FTDRH and FTDRL in multi-processor mode. The FTDRH.MPBT bit is set to 1. Data is set to FTDRH and FTDRL with the correct data length. Write 0 for unused bits. Write in order from FTDRH to FTDRL.

Data Length	Register Setting		Transmit data in FTDRH, FTDRL															
			FTDRHL															
			FTDRH								FTDRL							
	SCMR. CHR1	SMR. CHR	b15	b14	b13	b12	b11	b10	b9	b8	b7	b6	b5	b4	b3	b2	b1	b0
7 bits	1	0	–	–	–	–	–	–	MPBT	–	–	7-bit transmit data						
8 bits	1	1	–	–	–	–	–	–	MPBT	–	8-bit transmit data							
9 bits	0	Don't care	–	–	–	–	–	–	MPBT	9-bit transmit data								

Note: —: Invalid. The write value should be 0.

Figure 25.43 Data format written to FTDRH and FTDRL in multi-processor mode with FIFO selected

Figure 25.44 shows an example flow of multi-processor serial transmission with FIFO selected. In the ID transmission cycle, the ID must be transmitted with the FTDRH.MPBT bit set to 1. In the data transmission cycle, the data must be transmitted with the MPBT bit set to 0. The rest of the operations are the same as operations in asynchronous mode with FIFO selected.

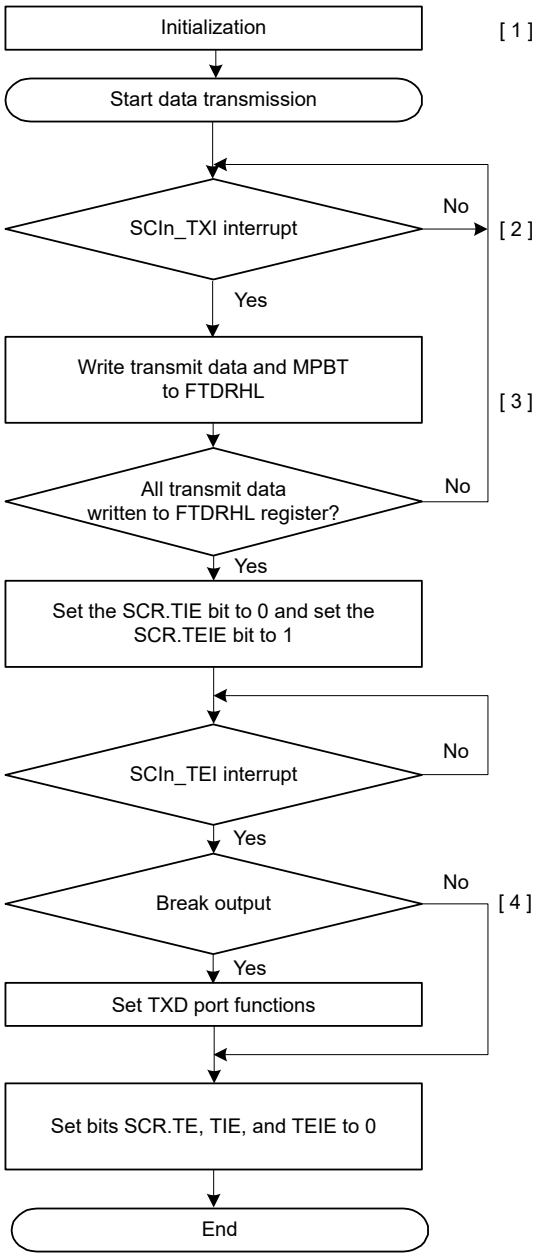

[1] SCI initialization:
Set data transmission.
After the SCR.TE bit is set to 1, 1 is output for a frame, and transmission is enabled.

[2] Transmit data write to FTDRHL by an SCIn_TXI interrupt request:
When transmit data is transferred from FTDRHL to TSR, when the quantity of receive data written in FTDRHL is equal to or less than the specified transmit triggering number, a transmit data FIFO empty interrupt (SCIn_TXI) request is generated.

[3] Serial transmission continuation procedure:
To continue serial transmission, write transmit data and MPBT to FTDRHL once using an SCIn_TXI interrupt request.
Transmit data can also be written to FTDRHL by activating the DMAC or DTC.
When SCIn_TEI interrupt requests are in use, set the SCR.TIE bit to 0 and the SCR.TEIE bit to 1 after the last of the data to be transmitted is written to the FTDRHL.

[4] Break output at the end of serial transmission:
To output a break in serial transmission, after setting the output state (LOW level output) of TXD pin by SPTR.SPB2IO and SPTR.SPB2DT bits, set the SCR.TE bit to 0.

Figure 25.44 Example flow of serial transmission in multi-processor mode with FIFO selected

25.4.2 Multi-Processor Serial Data Reception

(1) Non-FIFO selected

Figure 25.46 and Figure 25.47 are example flows of multi-processor serial reception. When the SCR.MPIE bit is set to 1, reading communication data is skipped until reception of communication data in which the multi-processor bit is set to 1. When communication data in which the multi-processor bit is set to 1 is received, the received data is transferred to the RDR register (the RDRHL register when 9-bit data length is selected), and the SCIn_RXI interrupt request is generated. The rest of the operations are the same as operations in asynchronous mode. Read the order from FRDRH to FRDRL.

Figure 25.45 shows an example operation for data reception.

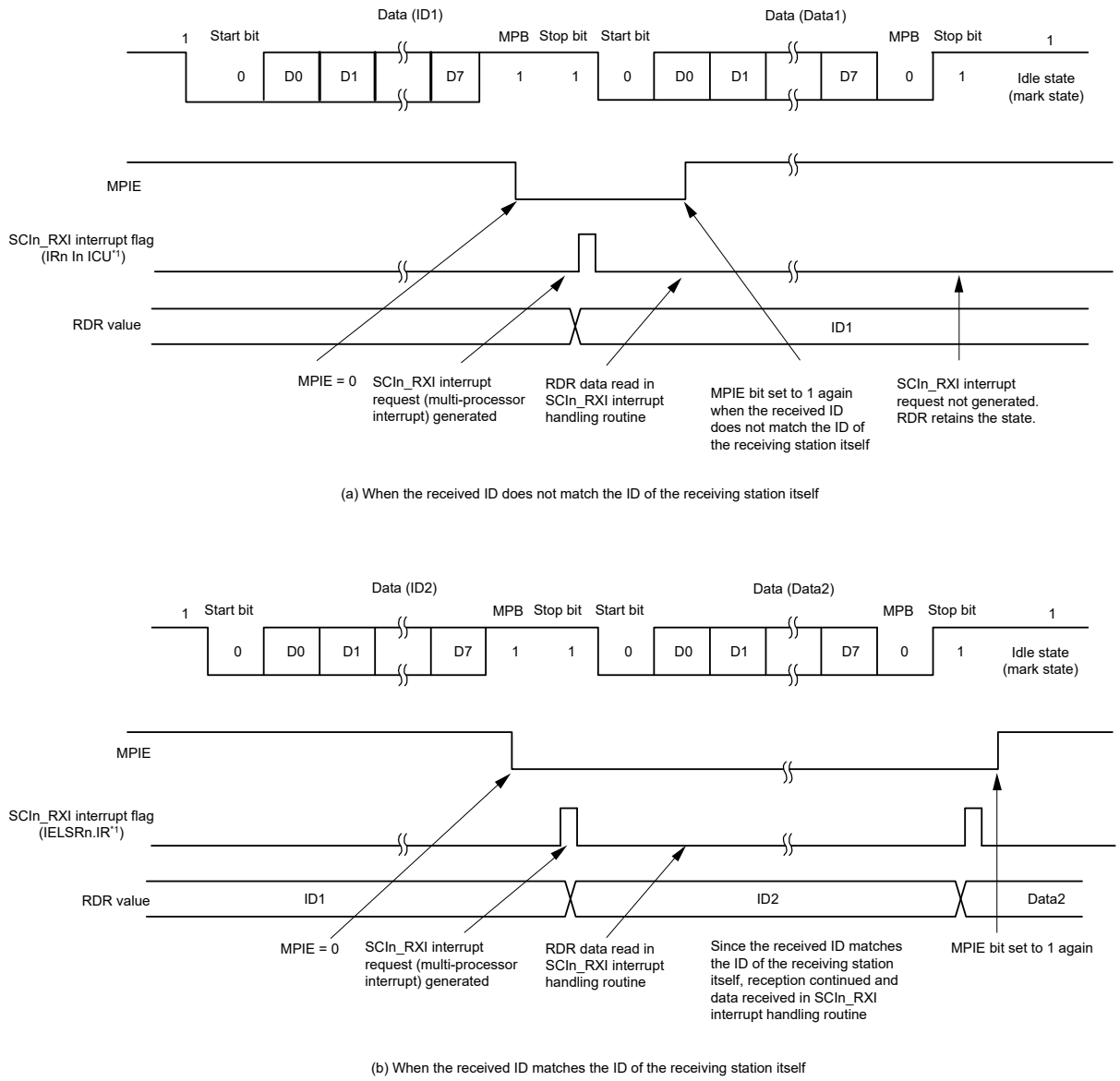

Note 1. See section 12, Interrupt Controller Unit (ICU) for information on the corresponding interrupt event number.

Figure 25.45 Example of SCI reception with 8-bit data, multi-processor bit, and 1 stop bit

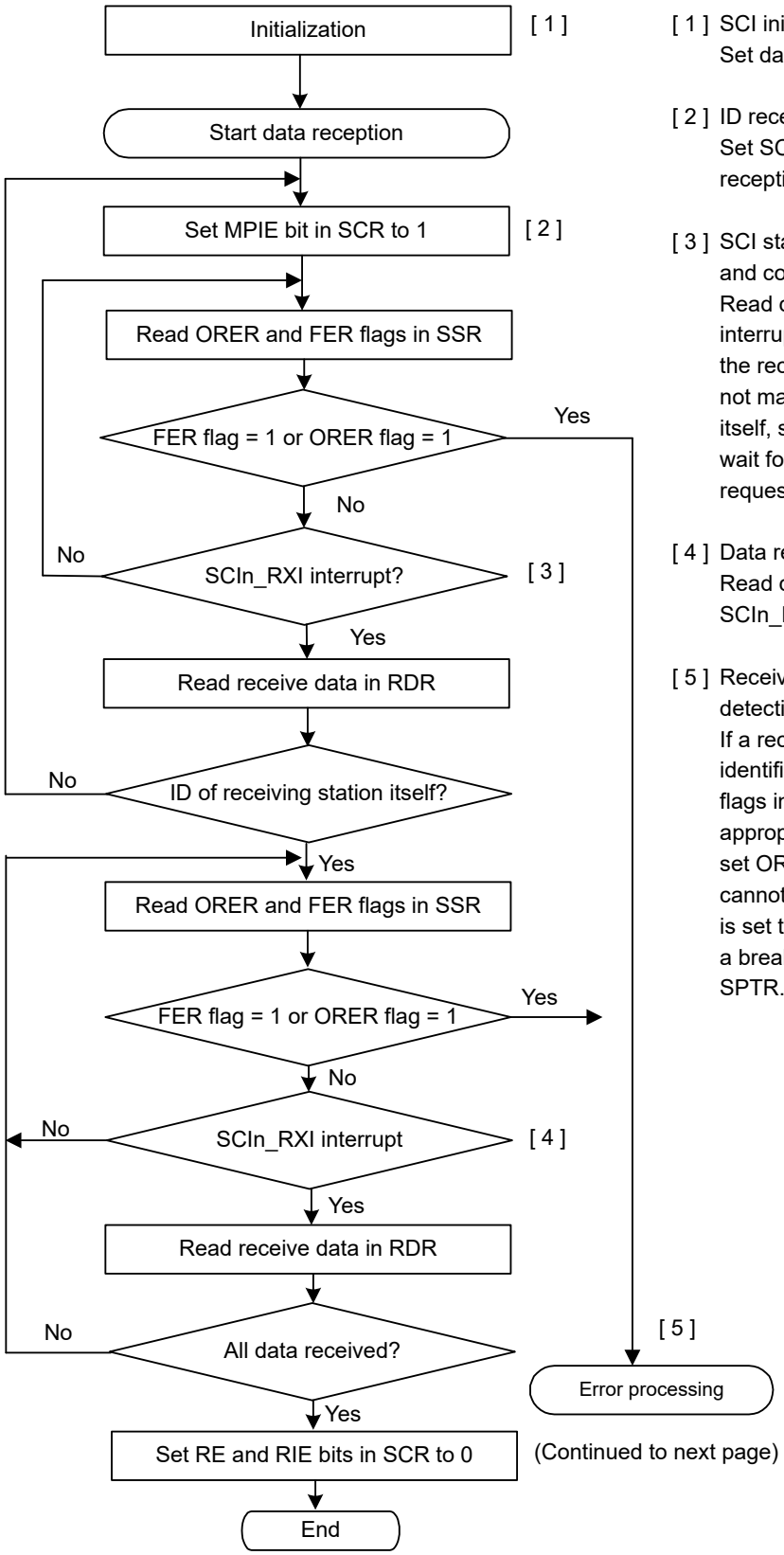

[1] SCI initialization:
Set data reception.

[2] ID reception cycle:
Set SCR.MPIE bit to 1 and wait for ID reception.

[3] SCI status confirmation and reception and comparison of ID:
Read data in RDR[*1] at the first SCIn_RXI interrupt and compare it with the ID of the receiving station itself. If the ID does not match the ID of the receiving station itself, set the MPIE bit to 1 again, and wait for another SCIn_RXI interrupt request.

[4] Data reception at an SCIn_RXI interrupt:
Read data in RDR[*1] once in the SCIn_RXI interrupt routine.

[5] Receive error processing and break detection:
If a receive error occurs, an error is identified by reading ORER and FER flags in SSR. After performing the appropriate error processing, be sure to set ORER and FER flags to 0. Reception cannot be resumed if any of these flags is set to 1. In the case of a framing error, a break can be detected by reading SPTR.RXDMON flag.

Note 1. The RDR register becomes the RDRHL register when 9-bit data length is selected.

Figure 25.46 Example flow of multi-processor serial reception with non-FIFO selected (1)

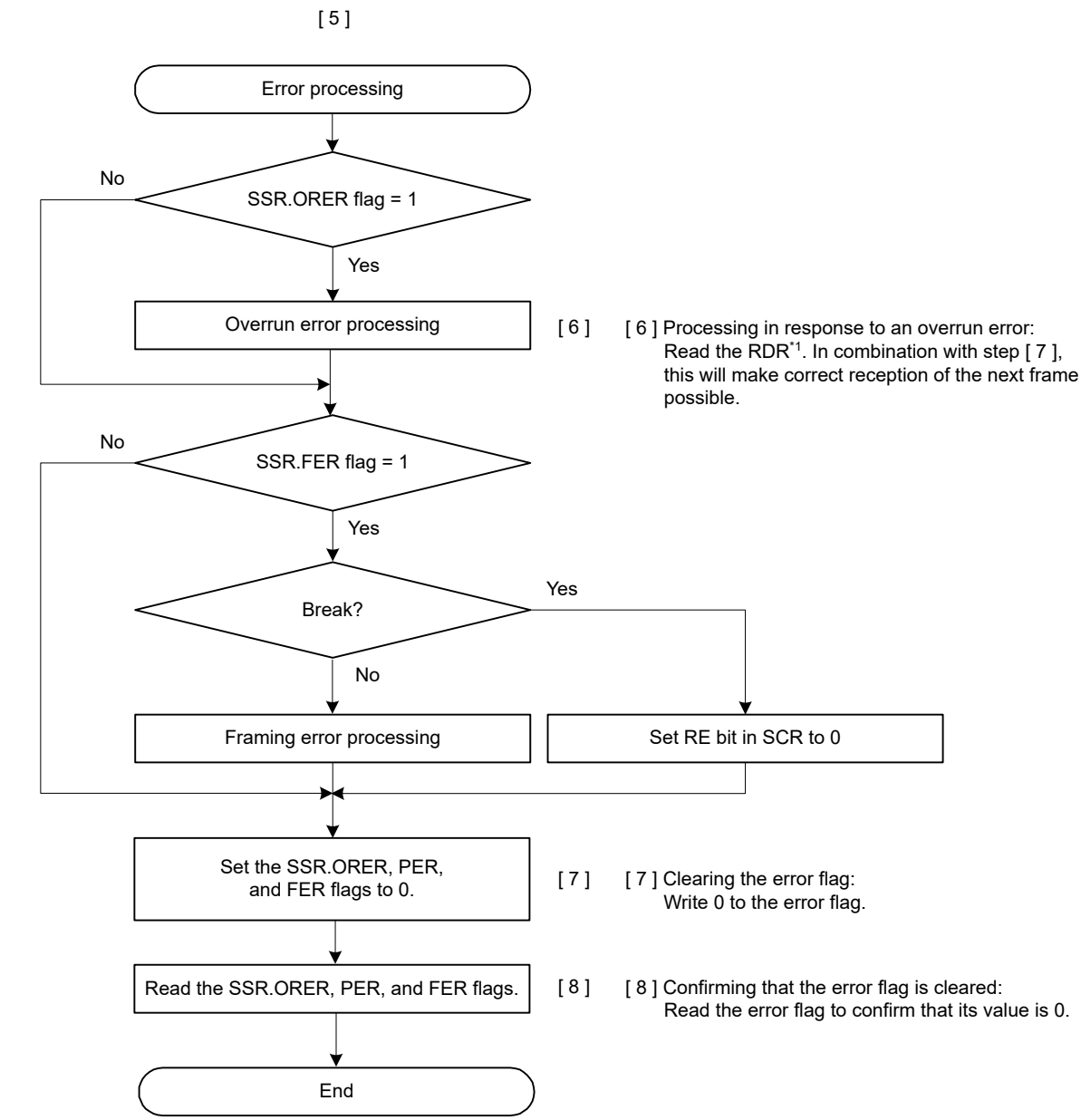

Note 1. The RDR register becomes the RDRHL register when 9-bit data length is selected.

Figure 25.47 Example flow of multi-processor serial reception with non-FIFO selected (2)

(2) FIFO selected

Figure 25.48 shows an example of a data format that is written to FRDRH and FRDRL in multi-processor mode.

In multi-processor mode, the MPB value that is a part of the receive data is written to the FRDRH.MPB bit. A value of 0 is written to the FRDRH.PER flag. Data is written to FRDRH and FRDRL with the correct data length. Unused bits are written with 0. Read in order from FRDRH to FRDRL. When software reads the FRDRL register, the SCI updates FER, MPB, and receive data (RDAT[8:0]) in FRDRL with the next data. The RDF, ORER and DR flags in the FRDRH register always reflect the associated flags in the SSR_FIFO register.

Data Length	Register Setting		Receive data in FRDRH, FRDRL															
			FRDRHL															
			FRDRH								FRDRL							
	SCMR. CHR1	SMR. CHR	b15	b14	b13	b12	b11	b10	b9	b8	b7	b6	b5	b4	b3	b2	b1	b0
7 bits	1	0	–	RDF	ORER	FER	0	DR	MPB	0	0	7-bit receive data						
8 bits	1	1	–	RDF	ORER	FER	0	DR	MPB	0	8-bit receive data							
9 bits	0	Don't care	–	RDF	ORER	FER	0	DR	MPB	9-bit receive data								

Note: When data length is 7 bits, 0 is always read for FRDRH[0] and FRDRL[7]
When data length is 8 bits, 0 is always read for FRDRH[0]
FRDRHL[15] bit is read as an indefinite value

Figure 25.48 Data format stored in FRDRH and FRDRL in multi-processor mode with FIFO selected

Figure 25.49 shows an example flow of multi-processor data reception with FIFO selected. When the SCR.MPIE is set to 1, reading communication data is skipped until reception of communication data in which the multi-processor bit is set to 1. When communication data in which the multi-processor bit is set to 1 is received, the received data, MPB and associated errors are transferred to the FRDRHL register. The SCR.MPIE bit is automatically cleared and normal reception continues.

If a framing error occurs and the SSR_FIFO.FER flag is set to 1, the SCI continues data reception. The rest of the operations are the same as operations in asynchronous mode with FIFO selected.

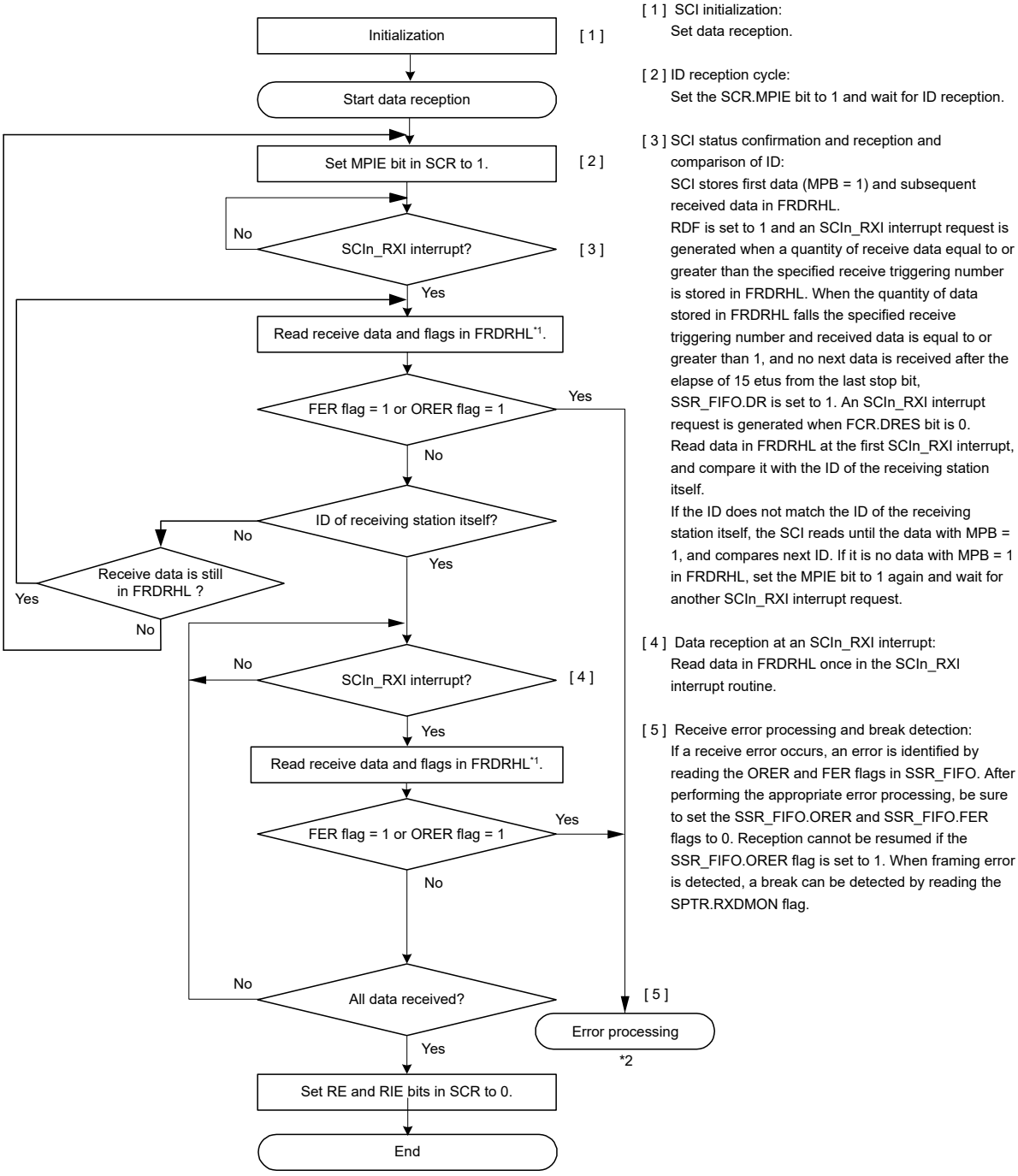

Note 1. If FRDRH and FRDRL are used instead of FRDRHL, read in order from FRDRH to FRDRL.
Note 2. Same as Figure 25.47

Figure 25.49 Example flow of serial reception in multi-processor mode with FIFO selected

25.5 Operation in Manchester mode

In Manchester mode, the transmit or receive serial data is coded in Manchester encoding.

Figure 25.50 shows the conceptual image of Manchester encoding.

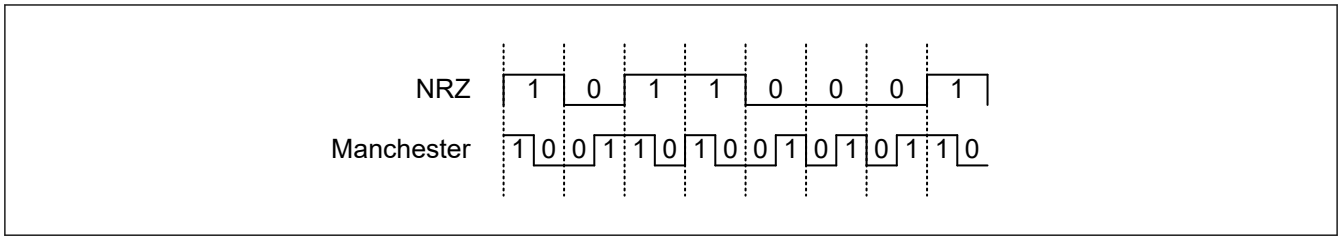

Figure 25.50 Example of Manchester Encoding

In Manchester mode, a preface and a start bit area are added to the transmit data in the register to configure a transmit frame. For transmission, data is encoded in Manchester encoding. When data is received, frames having the same format as transmitted frames are detected and Manchester decoding is performed.

For details on the frame format, see section 25.5.1. Frame Format.

25.5.1 Frame Format

Figure 25.51 shows the frame format in Manchester mode.

In the upper half of the figure, relevant setting registers are shown.

The preface area and the data area are encoded in Manchester encoding.

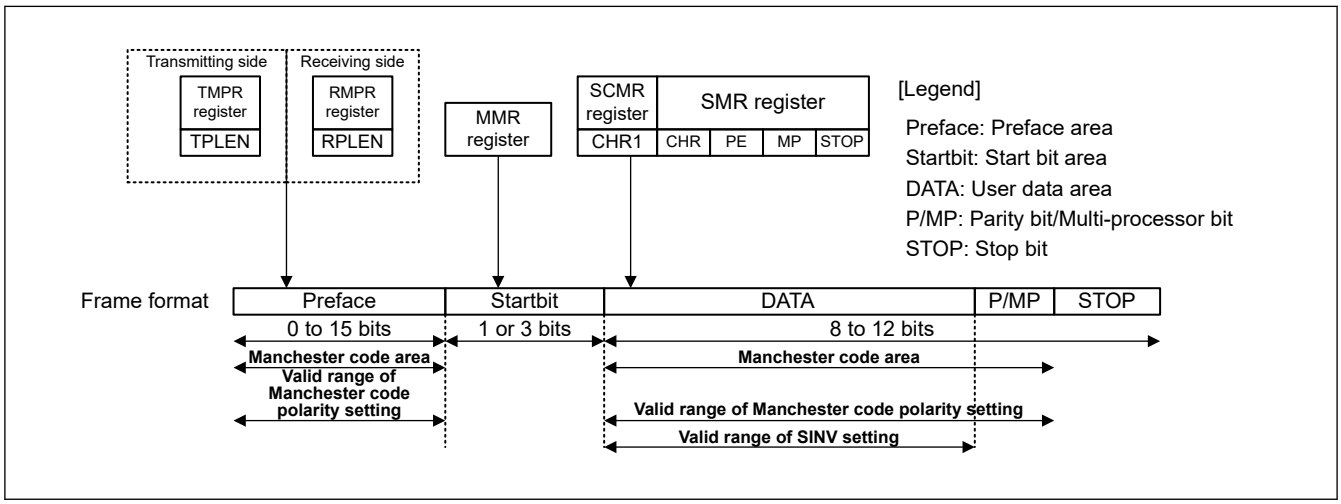

Figure 25.51 Frame Format in Manchester Mode

(1) Preface area

This is a fixed pattern area located at the beginning of each frame.

Different registers are used to set the preface area for transmission and reception. The preface length is determined by setting TMPR.TPLEN[3:0] for transmission. It is determined by setting RMPR.RPLEN[3:0] for reception.

If it is set to 0, the transmit preface is disabled and is not added.

If it is set to 1d to 15d, a preface whose length is determined by this setting is added.

(For example, if it is set to 1d, a 1-bit preface is added. If it is set to 15d, a 15-bit preface is added.)

The preface pattern is set with TMPR.TPPAT[1:0] for transmission and RMPR.RPPAT[1:0] for reception, and is selected from four types of patterns.

Figure 25.52 shows how the preface pattern is set. The preface area and the start bit area are added for each communication frame.

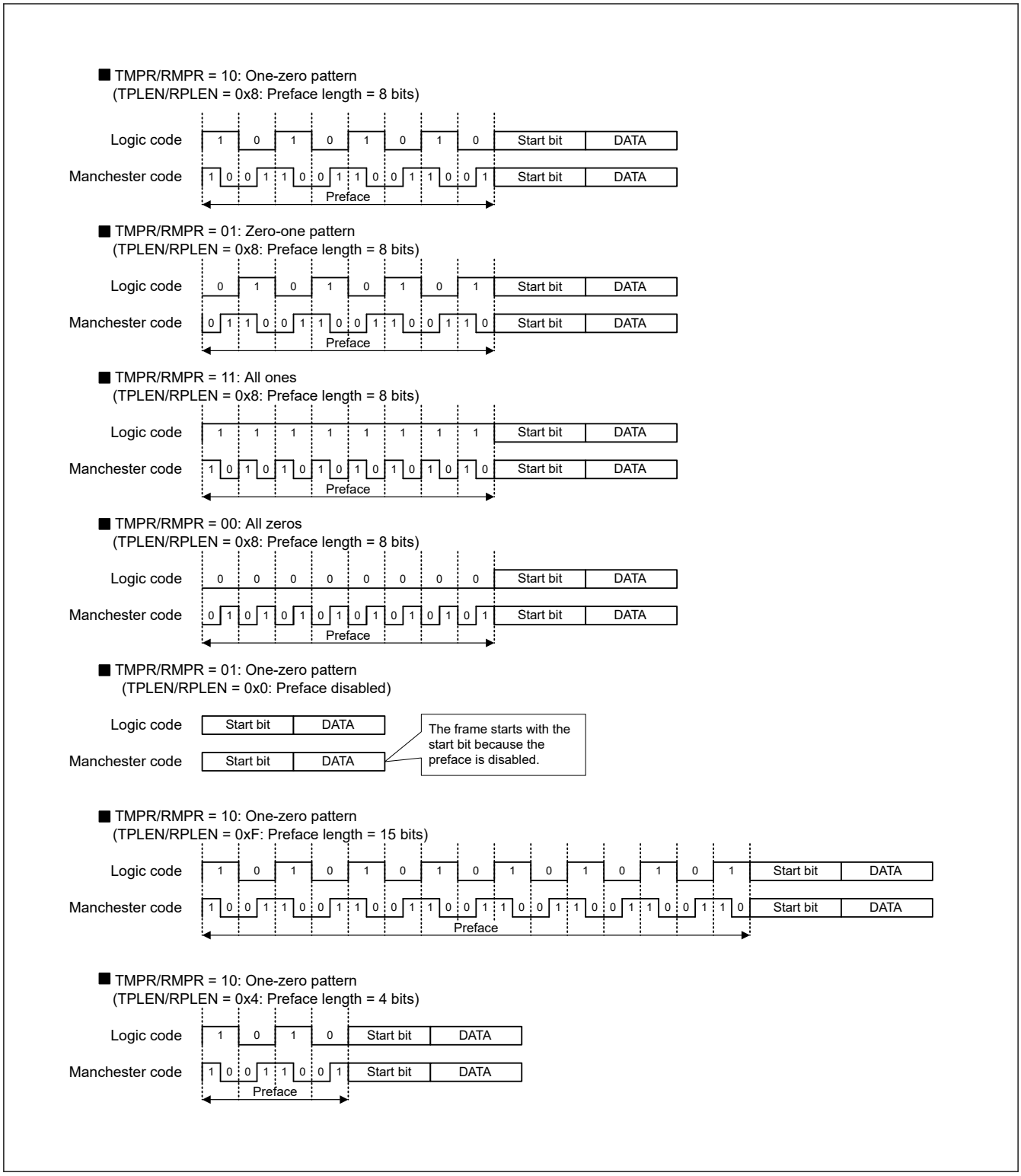

Figure 25.52 Preface Pattern Setting Example

(2) Start bit area

This is an area indicating the start of valid data in a frame. It is added after the preface area.

The start bit length is determined by MMR.SBSEL setting. When MMR.SBSEL = 0, the start bit length is 1 bit.

When MMR.SBSEL = 1, the start bit length is 3 bits.

When MMR.SBSEL = 1, the SYNC type can be selected from command SYNC and data SYNC.

Command SYNC means the three start bits are added as a one-to-zero transition.

Data SYNC means the three start bits are added as a zero-to-one transition.

The SYNC type is determined by the MMR.SYNSEL, MMR.SYNVAL and TDRH_MAN.TSYNC settings.

(When receiving, the received result is applied to RDRH_MAN.RSYNC.)

When MMR.SBSEL = 0, the start bit is added as a zero-to-one or one-to-zero transition.

The selection is determined by the MMR.SYNVAL setting.

The MMR.SYNSEL bit specifies the destination to be referred to when setting for transmission.

When the MMR.SYNSEL bit is set to 1, the MMR.SYNVAL setting is referred to. When the MMR.SYNSEL bit is set to 0, the TDRH_MAN.TSYNC setting is referred to.

Figure 25.53 shows the state of the start bit area according to the settings in the MMR.SYNSEL, MMR.SYNVAL and TDRH_MAN.TSYNC registers in the case of transmission. Figure 25.54 shows that in the case of reception.

The start bit(s) is not affected by the MMR.TMPOL or MMR.RMPOL setting.

*d.c.=don't care, Preface=preface area, START=start bit area, Data=user data area,
P=parity bit, MP=multi-processor bit, STOP=stop bit

Register setting				Output signal	Output start bit
MMR			TDRHL_MAN	Output TXDn waveform	
SBSEL	SYNSEL	SYNVAL	TSYNC		
0	d.c.	0	d.c.	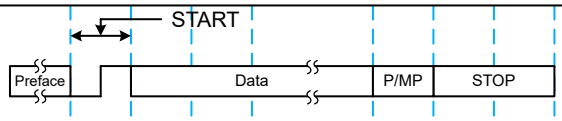	1bit 0 to 1 transition
0	d.c.	1	d.c.	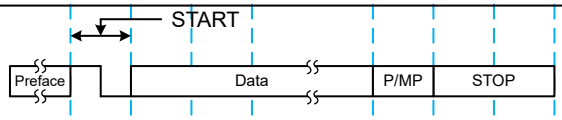	1bit 1->0transition
1	0	0	d.c.	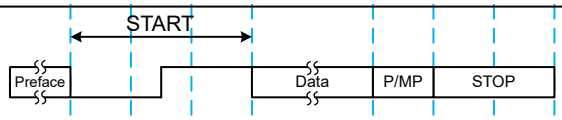	3bit 0to1 transition (DATA SYNC)
1	0	1	d.c.	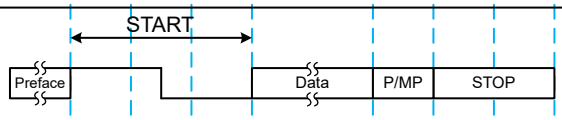	3bit 1to0 transition (COMMAND SYNC)
1	1	d.c.	0	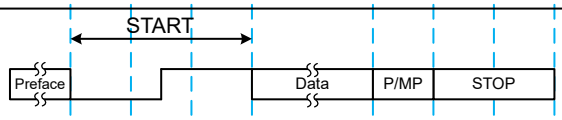	3bit 0to1 transition (DATA SYNC)
1	1	d.c.	1	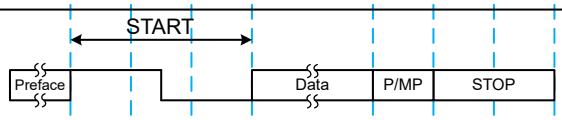	3bit 1to0 transition (COMMAND SYNC)

Figure 25.53 Settings Related to and Format of the Start Bit Area at Transmission

When the start bit area is 3 bits long, SYNVAL is not referenced.

d.c. = don't care, Preface = Preface area, START = Start bit area, Data = Data area
P = Parity bit, MP = Multi-processor bit, STOP = Stop bit

Register setting				Input signal	Start bit detection result[*1]	Register indication
MMR			TDRHL_MAN	RXDn input waveform		RDRHL_MAN.RSYNC
SBSEL	SYNSEL	SYNVAL	TSYNC			
0	d.c.	0	d.c.	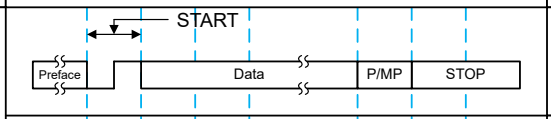	Normal start bit (1 bit: 0-to-1 transition)	0
				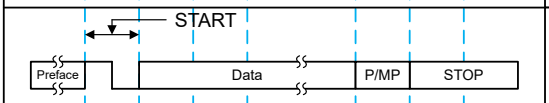	Start bit error	0
				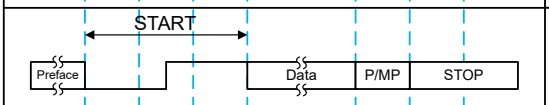	Start bit error	0
				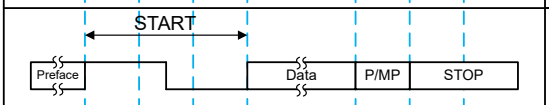	Start bit error	0
0	d.c.	1	d.c.	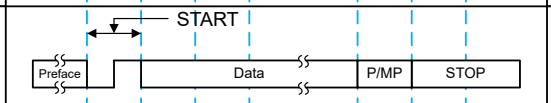	Start bit error	0
				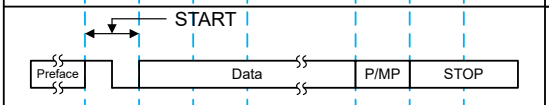	Normal start bit (1 bit: 1-to-0 transition)	0
				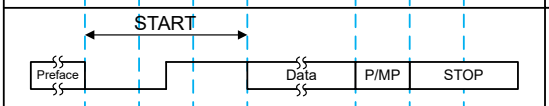	Start bit error	0
				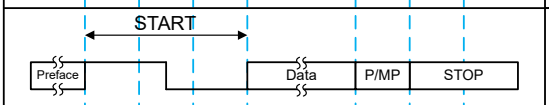	Start bit error	0
1	d.c.	d.c.	d.c.	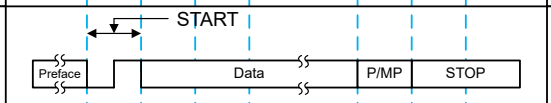	Start bit error	0
				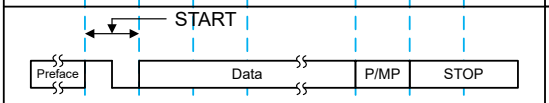	Start bit error	0
				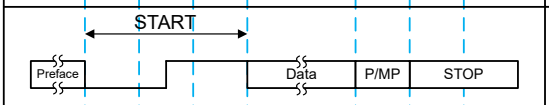	Data SYNC	0
				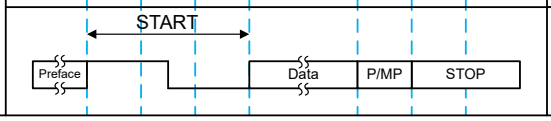	Command SYNC	1

Note 1. Data other than the start bit is assumed to be normal.

Figure 25.54 Settings Related to and Judgment of the Start Bit Area at Reception

(3) DATA

Since the format of the data area is the same as that of the asynchronous mode, see section 25.3.1. Serial Data Transfer Format.

As shown in Figure 25.50, Frame Format in Manchester Mode, the stop bit is not included in the Manchester encoding range.

25.5.2 Clock

As the transfer clock in Manchester mode, the clock generated by the on-chip baud rate generator is used by setting the SMR.CKS[1:0] bit.

Also it is possible to set the oversampling (transfer rate of one-bit period) by SEMR.ABCS bit.

When the SMER.ABCS bit is set to 0, oversampling x16 is selected with the one-bit period being 16 cycles of the base clock. When the SMER.ABCS bit is set to 1, oversampling x8 is selected with the one-bit period being 8 cycles of the base clock.

25.5.3 Initialization of the SCI in Manchester Mode

Before transferring data, write the initial value (0x00) to the SCR register and initialize the SCI following the example of flowchart shown in Figure 25.55.

Whenever the operating mode or transfer format is changed, the SCR register must be initialized before the change is made.

Note that setting the SCR.RE bit to 0 initializes none of the ORER, FER, PER, MER, and RDRF flags in the SSR_MANC register, the SYER, PFER and SBER flags in the MESR register, and the RDR, RDRHL_MAN registers.

Note also that switching the value of SCR.TE from 0 to 1 when SCR.TIE is 1 generates a SCIn_TXI interrupt request.

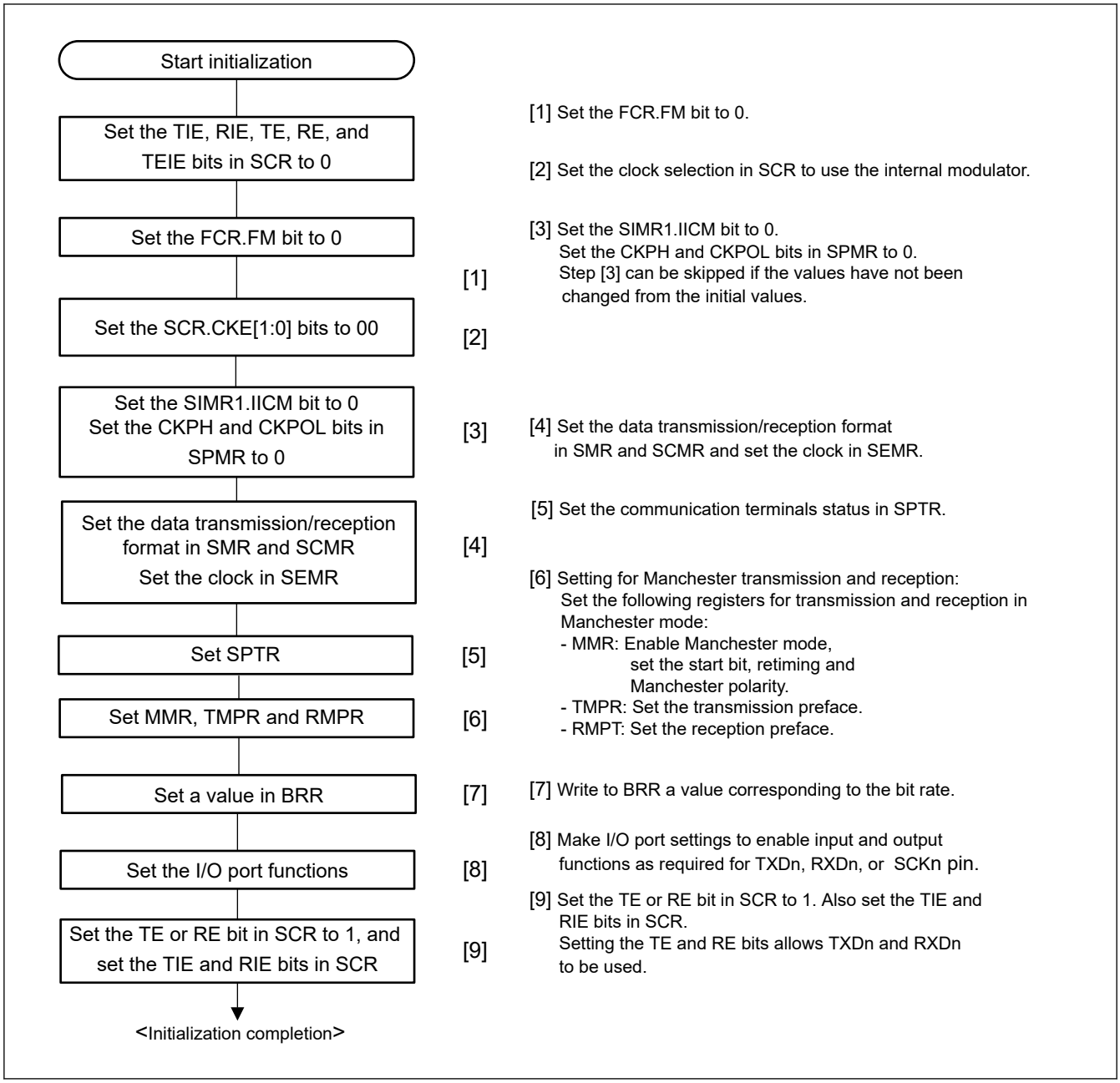

Figure 25.55 SCI Initialization Flow in Manchester Mode

25.5.4 Double-speed operation

When the ABCS bit in SEMR is set to 1 and eight pulses of the base clock for a 1-bit period is selected, the SCI operates on the bit rate twice that of when ABCS is set to 0.

When the BGDM bit in SEMR is set to 1, the cycle of the base clock is reduced to half and the SCI operates on the bit rate twice that of when ABCS is set to 0.

When the ABCS and the BGDM bits in SEMR are set to 1, the SCI operates on the bit rate four times that of when the ABCS and the BGDM bits in SEMR are set to 0.

25.5.5 CTS and RTS functions

The CTS function uses input on the CTSn_RTSn pin in transmission control. Setting the CTSE bit in SPMR to 1 enables the CTS function. The CTSn_RTSn pin can be set as a multiplexed pin which allows one pin to be used for either function, or as dedicated pins with each pin for a single function. Use the CTSPEN bit in SPMR for this setting.

When the CTS function is enabled, reception starts only when the CTSn_RTSn pin is at the low level.

Applying a high level to the CTSn_RTSn pin after transmission starts does not affect transmission of the current frame, which continues.

The RTS function uses output on the CTSn_RTSn pin to request transmission. When the SCI is ready to receive, it outputs a low level to the CTSn_RTSn pin, Conditions for output of the low level and high level are as follows:

[Conditions for low-level output]

When all conditions listed below are satisfied:

- The value of the RE bit in SCR is 1.
- The SCI is ready to receive.
- There is no received data yet to be read.
- All of the following flags are set to 0: SSR_MANC.ORER, FER, PER and MER flags, and MESR.SYER (when SYEREN = 1), PFER (when PFEREN = 1) and SBER flags (when SBEREN = 1).

[Conditions for high-level output]

- When the conditions for low output are not satisfied

25.5.6 Serial data transmission in Manchester mode

The SCI encodes data in Manchester encoding and sends the resultant data in Manchester mode.

When the polarity setting (MMR.TMPOL) set to 0, logic 0 is coded as a zero-to-one transition in Manchester code and logic 1 is coded as a one-to-zero transition in Manchester code.

When the polarity setting (MMR.TMPOL) set to 1, logic 0 is coded as a one-to-zero transition in Manchester code and logic 1 is coded as a zero-to-one transition in Manchester code.

For this reason, a level transition occurs with the Manchester encoded data in the middle of individual logic data. (See Figure 25.50).

The transmitter constructs transmit frames in a specific format by adding a preface area to data and setting the start bit(s) according to the polarity setting and sends resultant serial data.

For details on the frame format, see section 25.5.1. Frame Format.

Figure 25.56 shows the flowchart in transmission. Figure 25.57, Figure 25.58, and Figure 25.59 show examples of the operation for serial transmission in Manchester mode.

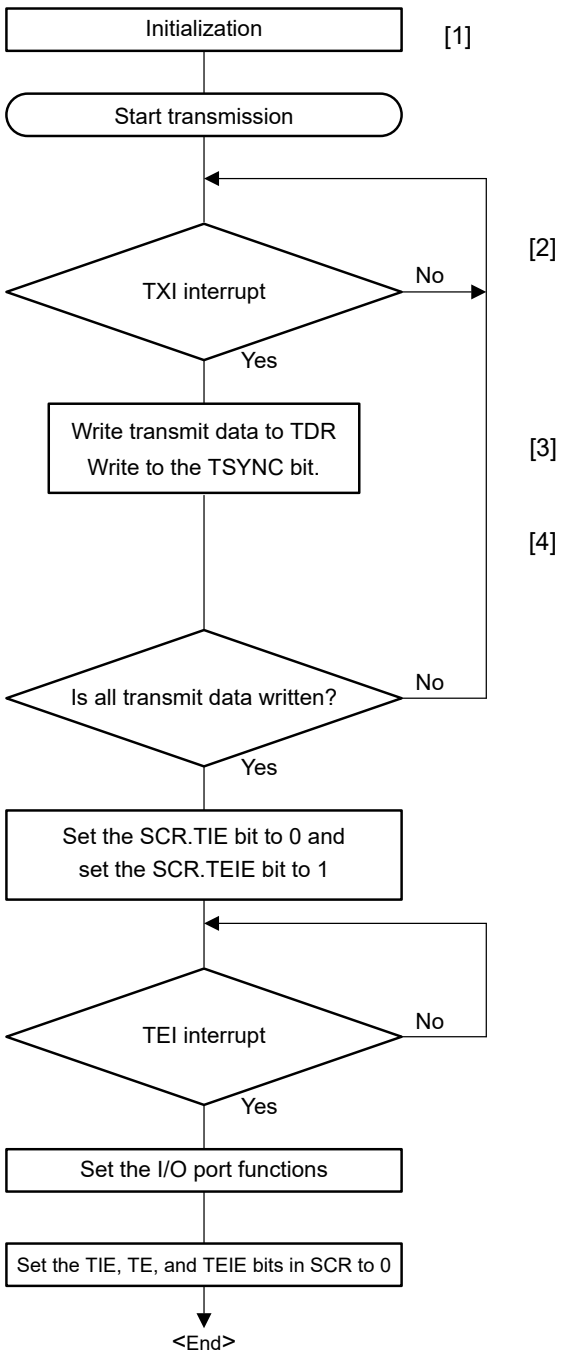

[1] SCI Initialization:
Set data transmission.
Setting the SCR.TE bit to 1 enables transmission.

[2] TXI interrupt:
When transmit data is transferred from TDR to TSR, a transmit data empty interrupt (TXI) request is generated.

[3] TDR setting:
Write the transmit data to TDR.
When TSYNC is used, also set TDRHL_MAN.TYSNC.

[4] Serial transmission continuation procedure:
To continue serial transmission, write the transmit data to TDR once by using an TXI interrupt.
The transmit data can also be written to TDR by activating the DMAC or DTC in the TXI interrupt request.
When TEI interrupt requests are used, set the SCR.TIE bit to 0 and the SCR.TEIE bit to 1 after the last of the data to be transmitted is written to TDR.

Figure 25.56 Example of Serial Transmission Flowchart in Manchester Mode

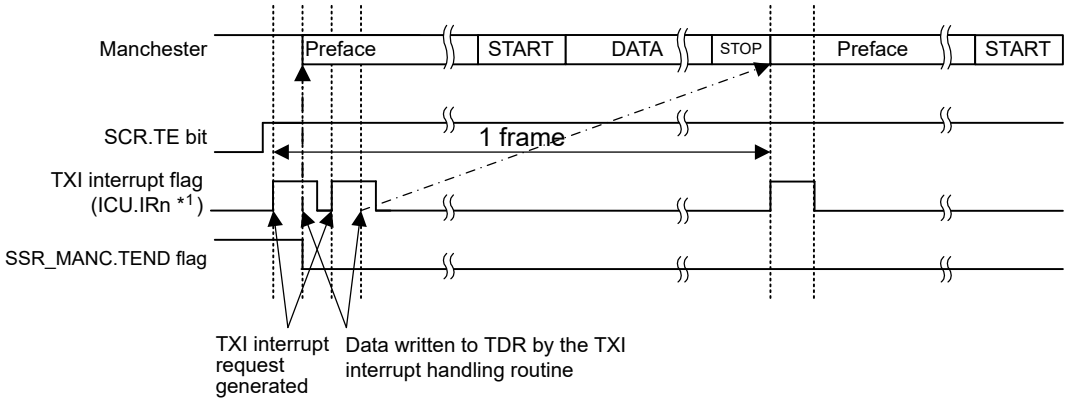

Note 1. For corresponding interrupt numbers, see section 12, Interrupt Controller Unit (ICU)

Figure 25.57 Example of Start-of-Transmission Operation for Serial Transmission in Manchester mode (with Preface but Without the CTS Function)

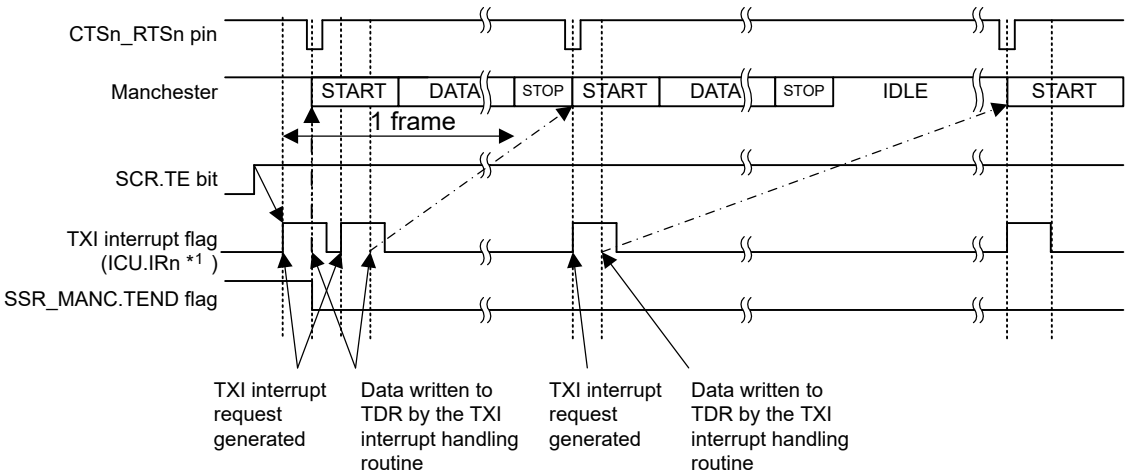

Note 1. For corresponding interrupt numbers, see section 12, Interrupt Controller Unit (ICU)

Figure 25.58 Example of Start-of-Transmission Operation for Serial Transmission in Manchester Mode (Without Preface but with the CTS Function)

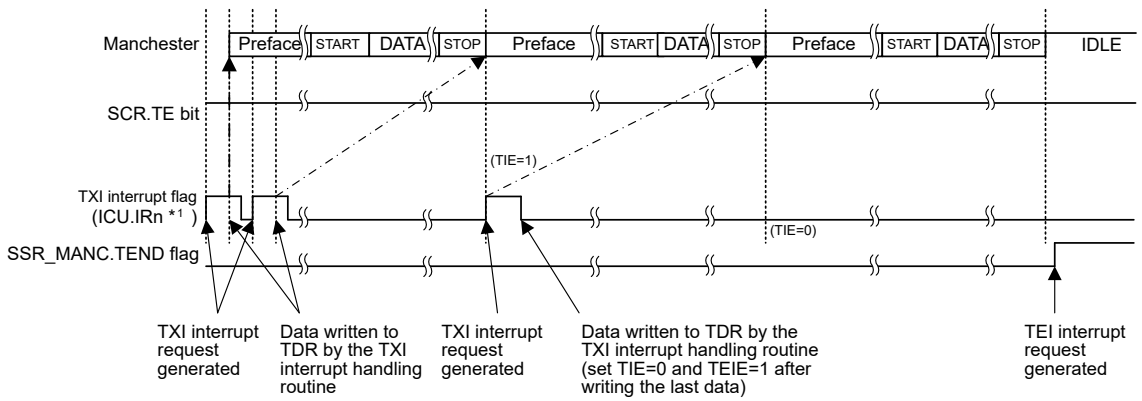

Note 1. For corresponding interrupt numbers, see section 12, Interrupt Controller Unit (ICU)

Figure 25.59 Example of End-of-Transmission Operation for Serial Transmission in Manchester Mode (with Preface but Without the CTS Function)

25.5.7 Serial Data Reception in Manchester Mode

In Manchester mode, the SCI operates on a base clock with a frequency of 16 times[*1] the bit rate. Reception starts by sampling the falling edges of received data at the base clock. As shown in Figure 25.60, reception starts at a falling edge of the received data and it continues if the received data keeps low for the duration of 1/4 bit. If the received data goes high within the duration of 1/4 bit, the SCI judges it as an error and waits for a falling edge again.

If a high level is expected in the first half of a bit in the received data, the SCI judges a low level that continues for one base clock cycle as an error and ignores the change to the low level.

Note 1. This is the case when SEMR.ABCS = 0. When SEMR.ABCS = 1, the SCI operates on a base clock with a frequency of 8 times the bit rate.

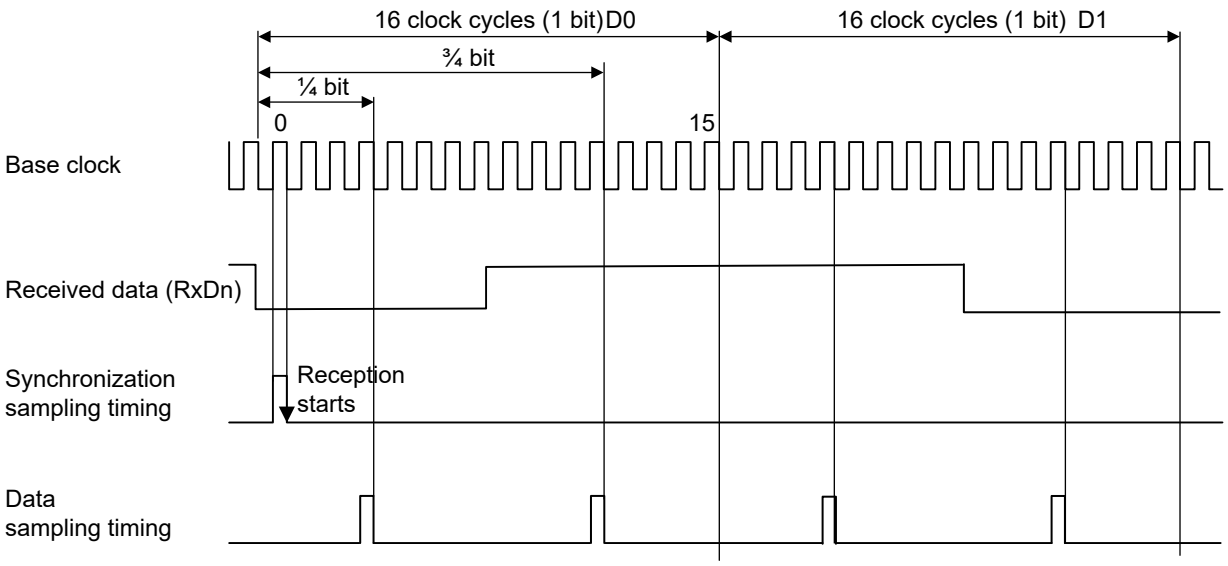

Figure 25.60 Data Reception Sampling Timing in Manchester Mode

In Manchester mode, data reception starts with detection of a preface and start bit area.

The SCI checks the input from the RXDn pin to see whether a preface is added based on the value of RMPR.RPLEN.

If the preface is disabled (RMPR.RPLEN = 0), it moves on to the detection of a start bit area without detecting a preface.

When a preface is enabled, it identifies a preface pattern setting according to the set value in RMPR.RPPAT, and compares it with the RXDn input for a pattern match to detect a preface pattern.

Upon detection of a preface pattern match, it judges it as a normal preface and moves on to the detection of a start bit area.

If detecting a preface pattern mismatch or a Manchester code error in the preface area, it judges it as a preface error and asserts a preface error (PFER).

For start bit detection, the SCI selects an expected value based on the register settings (MMR.SBSEL and SYNVAL), compares it with the RXDn input for a pattern match to detect a start bit area. Upon detection of a start bit pattern match, it judges it as a normal start bit area and moves on to the data processing.

Only when a preface and a start bit area are detected normally, it moves on to the next phase of data reception.

Upon detection of a start bit pattern mismatch, it asserts a start bit error flag (SBER).

In data processing, the SCI shifts the data by the expected received data length based on the register settings (SCMR.CHR1 and SMR.CHR) through the RSR register. If two sampling points in a bit of the received data are identical, the SCI judges this as a Manchester code error.

For details, see section 25.5.11. Errors in Manchester Mode (4).

When the parity function is disabled (SMR.PE = 0), the SCI moves on to the next phase of stop bit detection. When the parity function is enabled (SMR.PE = 1), the SCI performs parity checking. If detecting a parity error, it asserts a parity error flag (PER), and then moves on to stop bit detection.

In stop bit detection, the SCI checks the following in the stop bit area of the received frame:

It has two sampling points in a bit. If both points are at the high level, the bit is recognized as a normal stop bit and the data is stored in the RDR register. At least one low-level point is judged as an abnormal stop bit, causing a framing error flag (FER) to be set. Even when an error is detected, the received data is stored in the RDR register as abnormal data.

Figure 25.61 shows an example of the operation for serial data reception in Manchester mode.

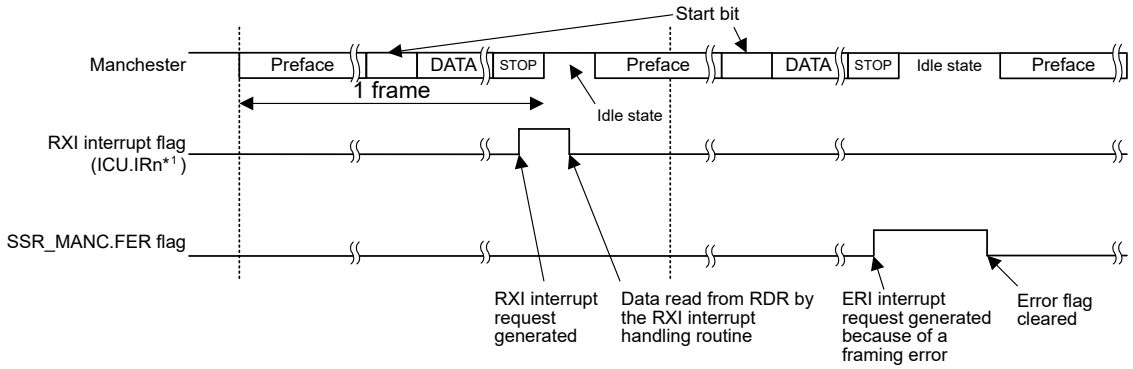

Note 1. For corresponding interrupt numbers, see section 12, Interrupt Controller Unit (ICU).

Figure 25.61 Example of Operation for Serial Data Reception in Manchester mode (with a Preface)

For the state of each status flag in the SSR_MANC register and RXDn input processing when a receive error is detected, see section 25.5.11. Errors in Manchester Mode.

If a receive error is detected, an SCIn_ERI interrupt request is generated but an SCIn_RXI interrupt request is not generated.

Data reception cannot be resumed while the receive error flag is 1. Accordingly, set the ORER, FER, PER, MER, SYER*1, PFER*1, and SBER*1 flags to 0 before resuming reception. Also, be sure to read the RDR (or RDRHL_MAN) register during overrun error processing. When a reception is forcibly terminated by setting the SCR.RE bit to 0 during operation, read the RDR (or the RDRHL_MAN) register because received data which has not yet been read may be left in the RDR (or the RDRHL_MAN) register.

Figure 25.62 and Figure 25.63 show examples of serial data reception flowchart in Manchester mode.

Note 1. Effective when the corresponding bit is enabled.

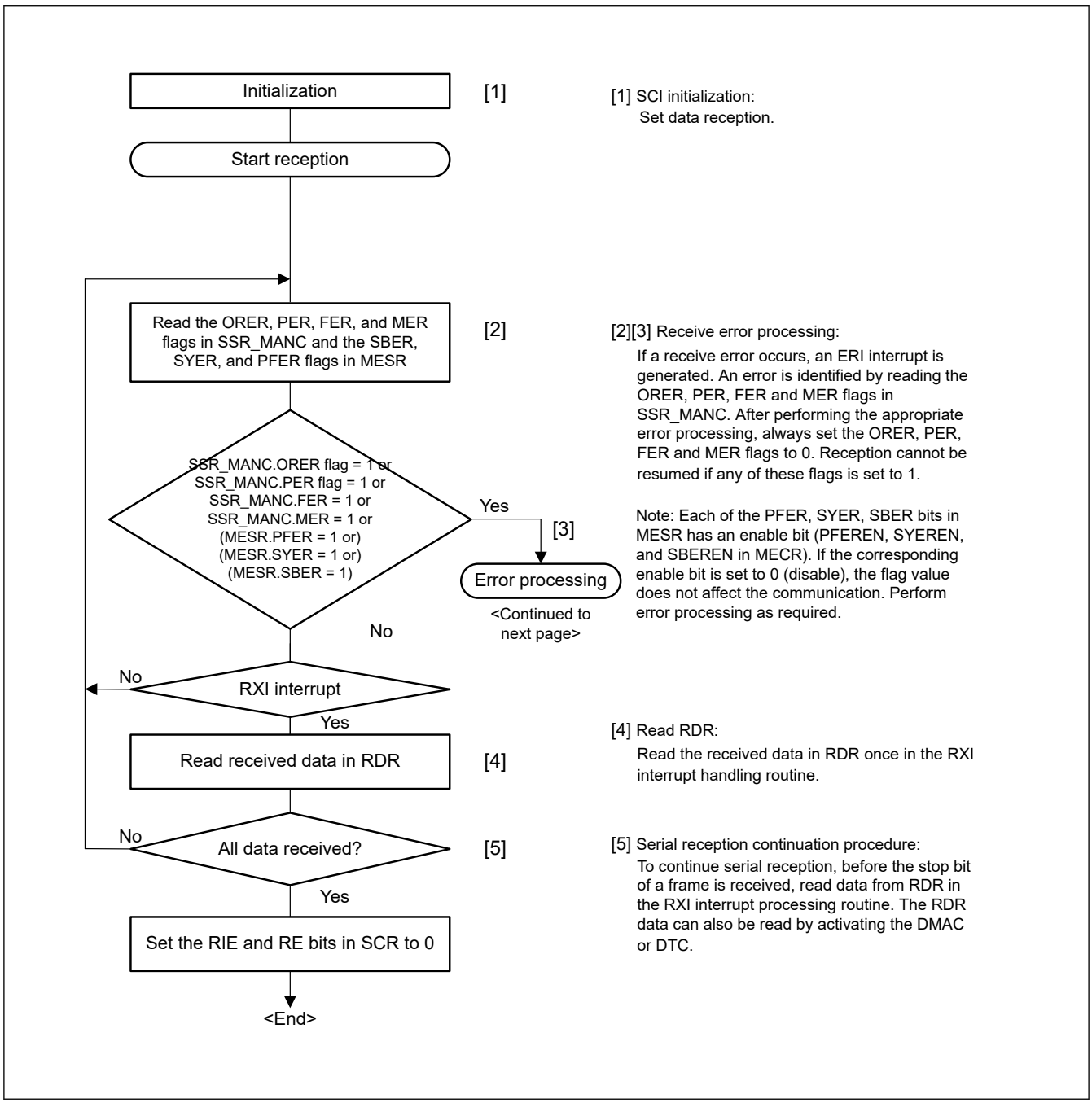

Figure 25.62 Example of Serial Data Reception Flowchart in Manchester Mode (Normal Reception)

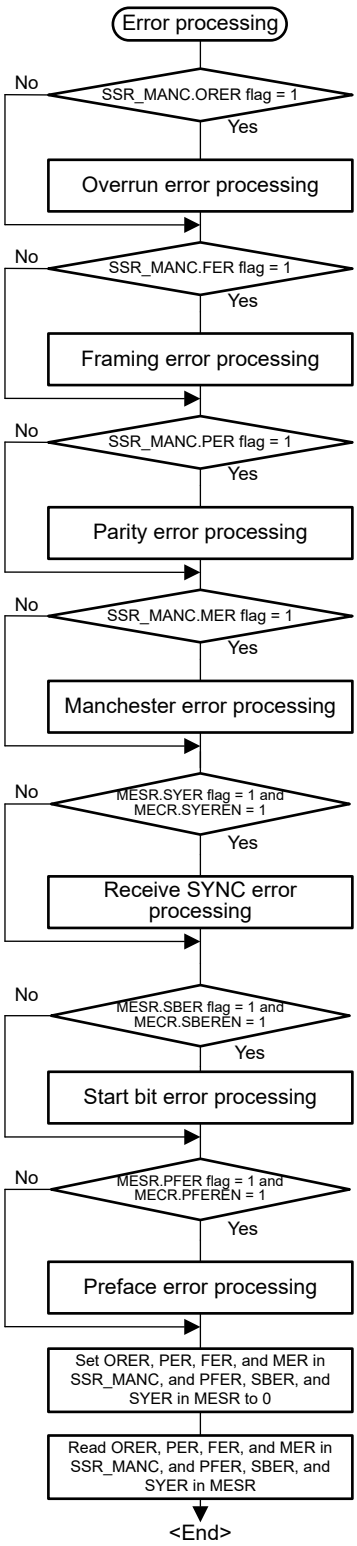

Figure 25.63 Example of Serial Reception Flowchart in Manchester Mode (Error Processing)

25.5.8 Operation When Multi-Processor Bit Is Used

See section 25.4. Multi-Processor Communication Function (1) for the operation in Manchester mode when using multi-processor mode because the operation is the same.

A preface and a start bit area are added to the frame format in Manchester mode. See Figure 25.63 for error processing in Manchester mode for the reception flowchart (Figure 25.47). See Table 25.35 for the operation status when detecting various errors.

25.5.9 Receive Retiming

This function corrects the timing for each central edge of the bit, taking advantage of the fact that each bit has an edge in the center in Manchester code.

The receive retiming function can be turned on or off by setting the ERTEN bit in the MMR register.

When the receive retiming function is turned off (MMR.ERTEN = 0), retiming is not performed, causing misalignment between the internal clock and the RXDn input to be accumulated and the receive margin to be reduced.

When the receive retiming function is turned on (MMR.ERTEN = 1), retiming is performed for the preface area, the start bit area[*1], and the data area (excluding the stop bit).

Note 1. Retiming is not performed for the start bit area if the preface length is 0 and the start bit length is 3.

As an example, the receive retiming when oversampling x16 is selected is shown below.

When detecting an RXDn input edge two to four cycles before the expected receive cycle, the receive processing is shortened by one sampling CLK cycle.

When detecting a RXDn input edge two to three cycles after the expected receive cycle, the receive processing is extended by one sampling CLK cycle.

(Even if the clock is misaligned with the data by more than two cycles, one cycle is corrected for each bit.)

Figure 25.64 shows the conceptual image of receive retiming range.

When detecting an edge in the tolerance area in the figure, data is received as is without making correction.

When detecting an edge in the SyncJump area in the figure, data is corrected for reception.

When detecting an edge in the SyncError area in the figure, data is received as abnormal data with no correction made.

For a Manchester code error (data matches at the 1/4-phase and 3/4-phase sampling points), the SCI reports a code error.

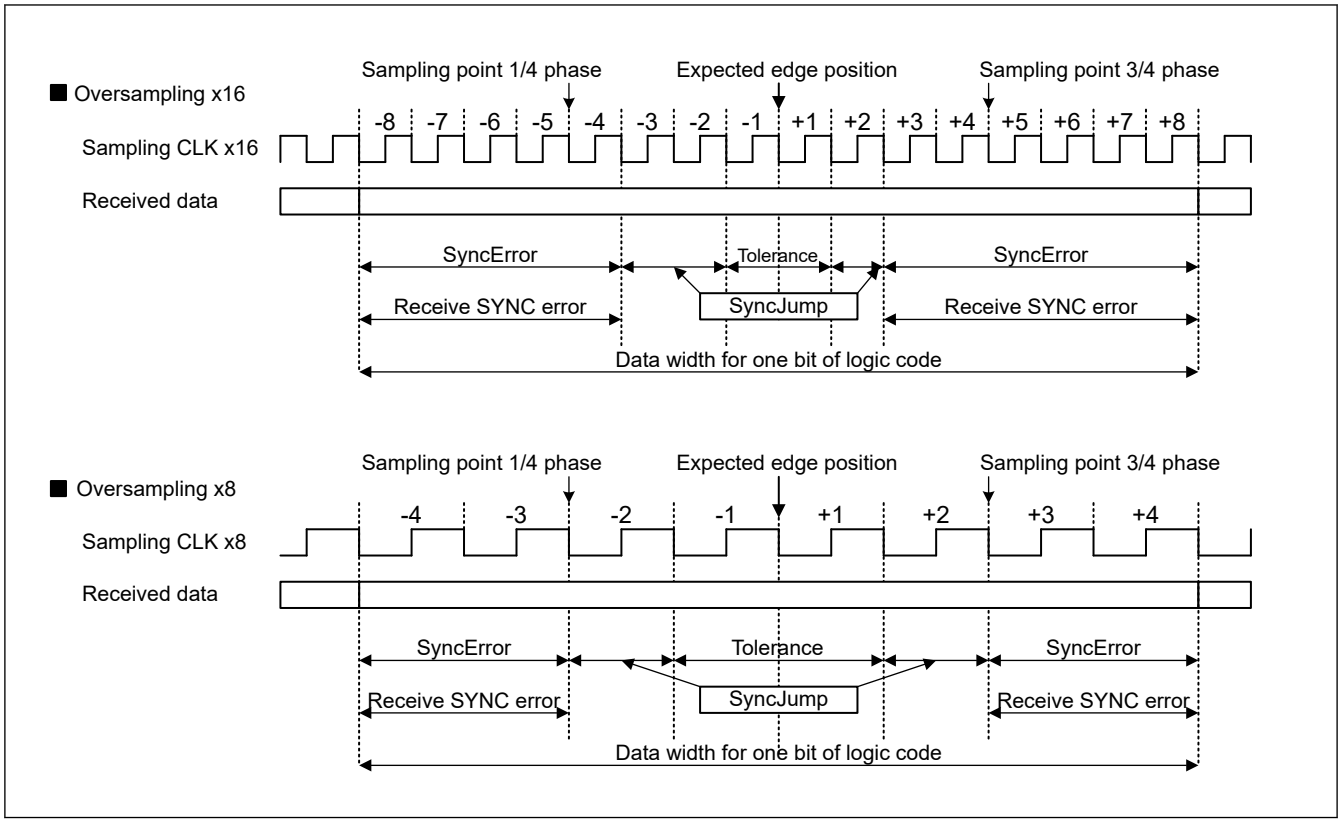

Figure 25.64 Conceptual Image of Reception Retiming Range

25.5.10 Polarity Setting for Manchester Code

The polarity of the Manchester code can be set with the Manchester Mode Register (MMR).

It can be set separately for transmission and reception. Use the MMR.TMPOL bit to set the polarity for transmission and the MMR.RMPOL bit to set the polarity for reception.

The Manchester code polarity setting is valid for the preface area, the data area, and the parity or multi-processor area.

When the initial settings (TMPOL/RMPOL = 0) are used for the polarity of Manchester code, logic 0 is encoded as a zero-to-one transition in Manchester code and logic 1 is encoded as a one-to-zero transition in Manchester code. If the settings are changed to TMPOL/RMPOL = 1, logic 0 is encoded as a one-to-zero transition in Manchester code and logic 1 is encoded as a zero-to-one transition in Manchester code. Figure 25.65 shows the conceptual image of the settings and operation.

Separately from the function above, the transmitted and received data in the data area can be inverted by the transmitted/received data inversion function (SCMR.SINV). Since the polarity of Manchester code (MMR.TMPOL/RMPOL) can be set separately from the transmitted/received data invert function (SCMR.SINV), if both are set to inversion (MMR.TMPOL/RMPOL = 1 and SCMR.SINV = 1), the transmitted and received data are set to initial state (inversion + inversion = normal).

The polarity of the start bit area can be set by a register different from the ones mentioned above.

Since a different register is used, the polarity of the start bit area is not affected by the polarity setting for Manchester code mentioned above.

For details on the setting for the start bit area, see section 25.5.1. Frame Format (2).

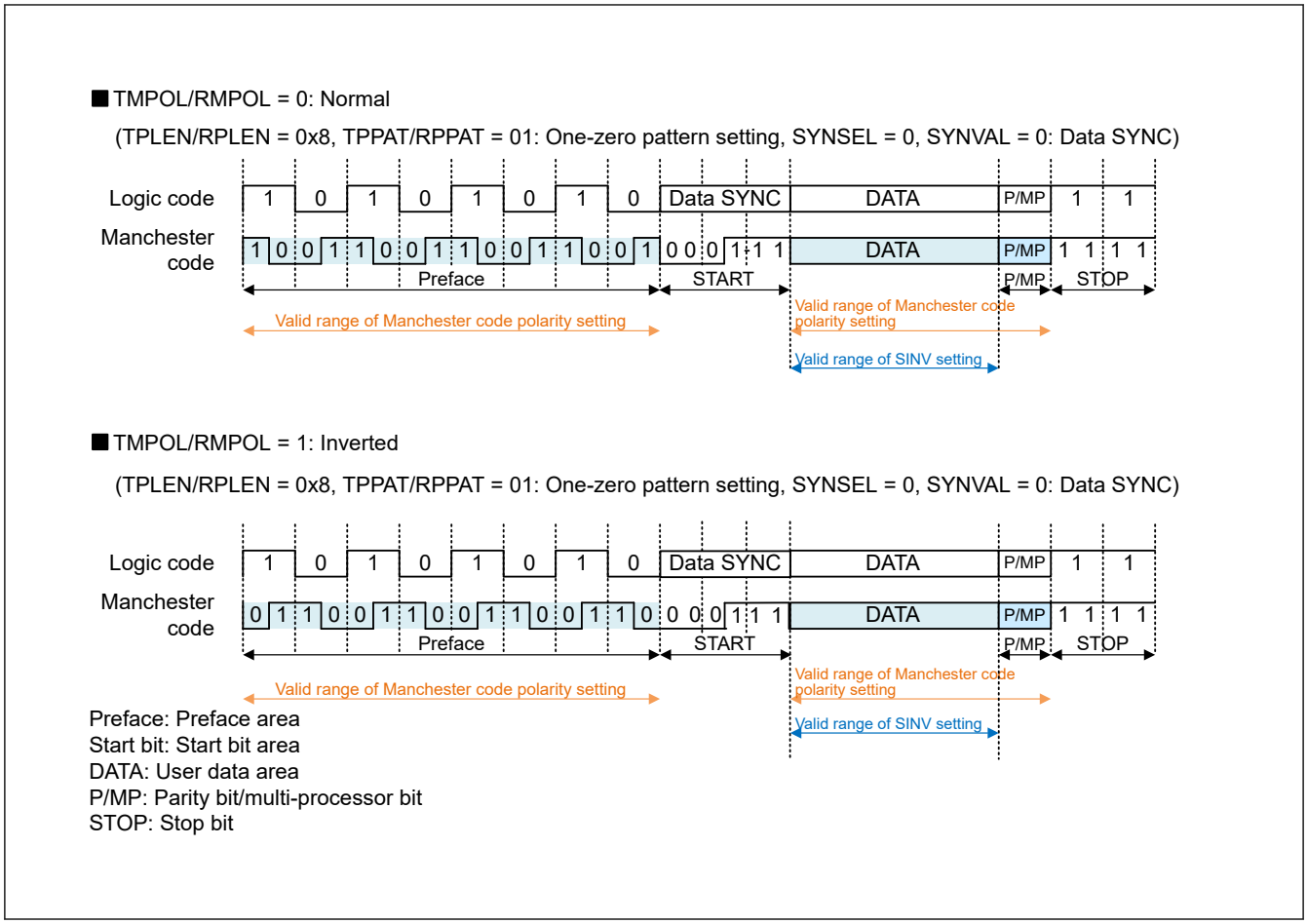

Figure 25.65 Valid Range of the Manchester Code Polarity Setting

25.5.11 Errors in Manchester Mode

There are the following errors in Manchester mode:

1. Parity error
2. Over run error
3. Framing error
4. Manchester error
5. Preface error
6. Start Bit error
7. Receive SYNC error

For errors (1) to (3), see section 25.3.9. Serial Data Reception in Asynchronous Mode (1) because they are the same as in asynchronous mode.

Each errors are judged in each area, but they are reflected on flags and operations at the timing of 3/4-bit sampling of the STOP bit area. If a preface error or start bit error is detected, subsequent data will not be received. Therefore, no other error detection is performed, and the error flag holds the previous information.

Table 25.33 lists the states of the serial status register when detecting errors and judgment about whether to store data in the RDR.

Table 25.34 lists the errors that can be detected in each area of a Manchester frame.

If a Preface error or Start bit error is detected, subsequent data will not be received. Therefore, no other error detection is performed, and the error flag holds the result of the previous frame reception. Also, if an error is detected in the previous frame, data will not be received, but errors in the pre-face area and start bit area will update that flag. Table 25.35 shows the flags and actions in this case.

(4) Manchester error

A Manchester error is generated when a Manchester code error is detected.

In Manchester code, there must be an edge (transition) in the center of the bit.

In the data area of a received frame (including the parity/multi-processor bit), the values of the 1/4-bit and 3/4-bit sampling points are checked in each received 1-bit data, and a Manchester code error is determined if these two values match.

If a Manchester code error is detected, the Manchester error flag (SSR_MANC.MER) is asserted.

If a Manchester error occurs, it is handled as an interrupt source and event source. If a Manchester error is detected, the next reception is not performed until the corresponding error flag is cleared.

(5) Preface error

A preface error is generated when the preface pattern does not match or a Manchester code error is detected in the preface area. If a preface error is detected, the preface error flag (SSR_MANC.PFER) is asserted.

It is possible to set whether to use this error flag as an interrupt source with the setting of the MECR register.

When MECR.PFEREN = 1, a preface error is handled as an interrupt source or event source. If a preface error is detected, the next reception is not performed until the corresponding error flag is cleared.

When MECR.PFEREN = 0, a preface error is not handled as an interrupt source or event source, and the next reception is not halted. However, a preface error is notified to MESR.PFER.

(6) Start bit error

A start bit error is generated when a mismatch is detected between the start bit area in the received frame and the preset start bit pattern. Upon detection of a start bit error, a start bit error flag (MESR.SBER) is asserted.

It is possible to set whether to use the start bit error as an interrupt source with the setting of the MECR register.

When MECR.SBEREN = 1, a start bit error is handled as an interrupt source or event source. If a start bit error is detected, the next reception is not performed until the corresponding error flag is cleared.

When MECR.SBEREN = 0, a start bit error is not handled as an interrupt source or event source, and the next reception is not halted. However, a start bit error is notified to MESR.SBER.

(7) Receive SYNC error

When the receive retiming function described in section 25.5.9. Receive Retiming is enabled, the receive retiming operation is performed.

If no edges are detected within the receive retiming range (SyncError area in Figure 25.64) when receive timing operation is being performed, a receive SYNC error is generated. Upon detection of a receive SYNC error, a receive SYNC error flag (MESR.SYER) is asserted. In areas not subject to retiming, receive SYNC errors are not detected.

The preface area[*1], the start bit area[*1],[*2], and the data area (excluding the stop bit) for which receive retiming operation is performed are checked.

It is possible to set whether to use the receive SYNC error as an interrupt source with the setting of the MECR register.

When MECR.SYEREN = 1, a receive SYNC error is handled as an interrupt source or event source. If a receive SYNC error is detected, the next reception is not performed until the corresponding error flag is cleared.

When MECR.SYEREN = 0, a receive SYNC error is not handled as an interrupt source or event source, and the next reception is not halted. However, a receive SYNC error is notified to MESR.SYER.

Note 1. In the case of a frame that starts with a pattern that expects the first half of the bit to be High, it is excluded from retiming.

Note 2. In the start bit area, when there is no preface length and 3 bit start bit is set, it is not subject to retiming.

Also, the 1st bit and the 2nd bit in the start bit area when 3 bit start bit is set are not subject to retiming.

Table 25.33 Flags in the SSR_MANC Register and Receive Data Handling in Manchester Mode (1 of 2)

Flag in the SSR_MANC register				Flag in the MESR register			received data	Received error status (ERI interrupt / event generation)
OREr	FER	PER	MER	SBER[*1]	PFER[*1]	SYER		
0	0	0	0	0	0	0	transfer to RDR	No error

Table 25.33 Flags in the SSR_MANC Register and Receive Data Handling in Manchester Mode (2 of 2)

Flag in the SSR_MANC register				Flag in the MESR register			received data	Received error status (ERI interrupt / event generation)
ORER	FER	PER	MER	SBER*1	PFER*1	SYER		
0	1	0	0	0	0	0	transfer to RDR	Framin error
0	0	1	0	0	0	0	transfer to RDR	Parity error
0	1	1	0	0	0	0	transfer to RDR	Framing error + Parity error
0	0	0	1	0	0	0	transfer to RDR	Manchester error
0	1	0	1	0	0	0	transfer to RDR	Framing error + Manchester error
0	0	1	1	0	0	0	transfer to RDR	Parity error + Manchester error
0	1	1	1	0	0	0	transfer to RDR	Framing error + Parity error + Manchester error
1	0	0	0	0	0	0	Lost	Overrun error
1	1	0	0	0	0	0	Lost	Overrun error + Framing error
1	0	1	0	0	0	0	Lost	Overrun error + Parity error
1	1	1	0	0	0	0	Lost	Overrun error + Framing error + Parity error
1	0	0	1	0	0	0	Lost	Overrun error + Manchester error
1	1	0	1	0	0	0	Lost	Overrun error + Framing error + Manchester error
1	0	1	1	0	0	0	Lost	Overrun error + Parity error + Manchester error
1	1	1	1	0	0	0	Lost	Overrun error + Framing error + Parity error + Manchester error
0	Combination of above			0	0	0	transfer to RDR	Errors above + Receive SYNC error*2
1				0	0	0	Lost	Errors above + Receive SYNC error*2
hold	hold	hold	hold	0	1	0	Lost	Preface error*3
hold	hold	hold	hold	1	0	0	Lost	Start bit error*3
hold	hold	hold	hold	0	1	1	Lost	Preface error*3 + Receive SYNC error*2
hold	hold	hold	hold	1	0	1	Lost	Start bit error*3 + Receive SYNC error*2

Note 1. Start bit error and Preface error never become 1 at the same time.
Note 2. When MECR.SYEREN = 1, SCIn_ERI interrupt / event is generated by SYER factor.
Note 3. If MECR.PFEREN = 1 or MECR.SBEREN = 1, an SCIn_ERI interrupt / event is generated when the corresponding flag is set.

Table 25.34 Errors Detectable in Each Area

	Preface error (PFER)	Start Bit error (SBER)	Manchester error (MER)	Receive SYNC error (SYER)	Parity error (PER)	Framing error (FER)
Preface area	✓	—	—*1	✓*2	—	—
Start Bit area	—	✓	—	✓*2	—	—
Data area	—	—	✓	✓	—	—
Parity area	—	—	✓	✓	✓	—
Multi-processor area	—	—	✓	✓	—	—
Stop Bit area	—	—	—	—	—	✓

Note: ✓: Detected, —: Not detected
Note 1. When an Manchester code error occurs in the preface area, it is defined as a preface error.
Note 2. It may not be subject to Receive SYNC error detection. For details see the text section 25.5.11. Errors in Manchester Mode (7)

Table 25.35 Operation status due to presence / absence of error in previous frame and operation status list in multiprocessor mode (1 of 2)

Previous frame	Each area of the Frame					PFEREN	SBEREN	SYEREN	received data	Error flag	Interrupt request	Event signal
	preface	start bit	data	parity	stop							
No Error	PFER	No Error	Don't Care	Don't Care	Don't Care	0	Don't Care	Don't Care	Lost	set PFER*1	not output	not output
	No SYER*1					1					output	output
	No Error	SBER	Don't Care	Don't Care	Don't Care	Don't Care	0	Don't Care	Lost	set SBER*1	not output	not output
		No SYER*1					1				output	output
	SYER	No Error	Don't Care	Don't Care	Don't Care	Don't Care	Don't Care	0	transfer to RDR	set SYER	not output	not output
	No PFER							1	Lost		output	output
	No Error	SYER	Don't Care	Don't Care	Don't Care	Don't Care	Don't Care	0	transfer to RDR	set SYER	not output	not output
		No SBER						1	Lost		output	output
	No Error	No Error	SYER		No Error	Don't Care	Don't Care	0	transfer to RDR	set SYER	not output	not output
								1	Lost		output	output
	No Error	No Error	MER		No Error	Don't Care	Don't Care	Don't Care	transfer to RDR	set MER	output	output
	No Error	No Error	Don't Care	PER	No Error	Don't Care	Don't Care	Don't Care	transfer to RDR	set PER	output	output
	No Error	No Error	Don't Care	Don't Care	FER	Don't Care	Don't Care	Don't Care	transfer to RDR	set FER	output	output
	There is some error ORER					Don't Care	Don't Care	Don't Care	Lost	set some flags*2	output	output
	No Error	No Error	No Error	No Error	No Error ORER	Don't Care	Don't Care	Don't Care	Lost	set ORER	output	output

Table 25.35 Operation status due to presence / absence of error in previous frame and operation status list in multiprocessor mode (2 of 2)

Previous frame	Each area of the Frame					PFEREN	SBEREN	SYEREN	received data	Error flag	Interrupt request	Event signal
	preface	start bit	data	parity	stop							
some error*3 *6	PFER No SYER*1	No Error	Don't Care	Don't Care	Don't Care	0 1	Don't Care	Don't Care	Lost	set PFER*1	output*4	not output*5
	No Error	SBER No SYER*1	Don't Care	Don't Care	Don't Care	Don't Care	0 1	Don't Care		set SBER*1		
	SYER No PFER	No Error	Don't Care	Don't Care	Don't Care	Don't Care	Don't Care	0 1		set SYER		
	No Error	SYER No SBER	Don't Care	Don't Care	Don't Care	Don't Care	Don't Care	0 1		set SYER		
	No Error	No Error	SYER		No Error	Don't Care	Don't Care	0 1		don't set any flags		
	No Error	No Error	MER		No Error	Don't Care	Don't Care	Don't Care				
	No Error	No Error	Don't Care	PER	No Error	Don't Care	Don't Care	Don't Care				
	No Error	No Error	Don't Care	Don't Care	FER	Don't Care	Don't Care	Don't Care				
	There is some error ORER					Don't Care	Don't Care	Don't Care				
	No Error	No Error	No Error	No Error	No Error ORER	Don't Care	Don't Care	Don't Care				

Note 1. If SYER is detected, the SYER flag is also set. Other operations are as shown in this table.
Note 2. Other detected error flags including ORER are also set.
Note 3. If all the error flags are cleared before the STOP bit is judged, the operation will be the same as the case where there is no error in the previous frame of this table.
Note 4. Since the SCIn_ERI interrupt request is level output, it remains active due to errors in the previous frame regardless of the presence or absence of error in the relevant frame.
Note 5. Since the error cause is continuously detected, the SCIn_ERI event is not newly output regardless of the presence or absence of errors in the relevant frame.
Note 6. For PFER, SBER, and SYER, when each enable bit is set to disable, it is treated as no error.

Table 25.36 Operation when MPIE = 1 in multi-processor mode (MPIE = 0)

MPB*1	Each area of the frame					PFEREN	SBEREN	SYEREN	received data	Error flag	Interrupt request	Event signal
	preface	start bit	data	parity	stop							
1	No Error	No Error	Don't Care	Don't Care	Don't Care	Don't Care	Don't Care	Don't Care	transfer to RDR	set some flags	output*2	output*2
	No PFER	No SBER	Don't Care	Don't Care	Don't Care	Don't Care	Don't Care	0				
	SYER*3	SYER*3						1	Lost	don't set any flags	not output	not output
	PFER	No Error	Don't Care	Don't Care	Don't Care	Don't Care	Don't Care	Don't Care				
	No Error	SBER	Don't Care	Don't Care	Don't Care	Don't Care	Don't Care					

Note 1. If the received MPB bit is 0, it is not received the frame, and the operation is the same as lost of the reception data of this table.
Note 2. If no error is detected, SCIn_RXI interrupt request or event is output, and if it is detected, SCIn_ERI interrupt request or event is output.

Note 3. When SYER is detected in the preface area or the start bit area, the behavior of handling as an error depending on the SYEREN bit changes.

25.6 Operation in Clock Synchronous Mode

Figure 25.66 shows the data format for clock synchronous serial data communications.

In clock synchronous mode, data is transmitted or received in synchronization with clock pulses. For single-character data transfer, data consists of 8-bit. In clock synchronous mode, no parity bit can be added.

In data transmission, the SCI outputs data from one falling edge of the synchronization clock to the next falling edge. In data reception, the SCI receives data in synchronization with the rising edge of the synchronization clock. After 8-bit data is output, the transmission line holds the last bit as output state. When the SPMR.CKPH bit is 1 in slave mode, the transmission line holds the first bit output state.

Within the SCI, the transmitter and receiver are independent units, enabling full-duplex communications by using a shared clock. Both the transmitter and the receiver also have a double-buffered structure, so that the next transmit data can be written during transmission or the previous receive data can be read during reception, enabling continuous data transfer.

However, it is not possible to perform continuous transfer in the fastest bit rate setting (BRR[7:0] = 0x00 and SMR.CKS[1:0] = 00b). Therefore, when the FIFO is selected, this setting (BRR[7:0] = 0x00 and SMR.CKS[1:0] = 00b) is not available.

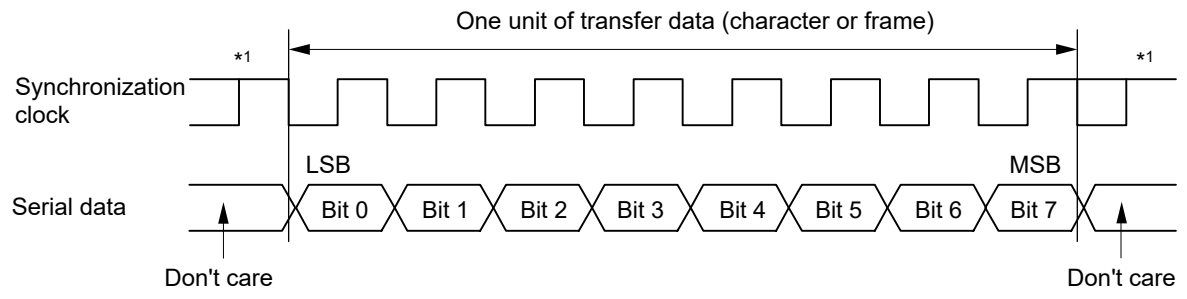

Note 1. Holds a high level except during continuous transfer.

Figure 25.66 Data format in clock synchronous serial communications with LSB-first order

25.6.1 Clock

Either an internal clock generated by the on-chip baud rate generator or an external synchronization clock input at the SCKn pin can be selected based on the SCR.CKE[1:0] setting.

When the SCI operates on an internal clock, the synchronization clock is output from the SCKn pin. Eight synchronization clock pulses are output in the transfer of one character. When no transfer is performed, the clock is held high. However, when only data reception is performed while the CTS function is disabled, the synchronization clock output starts when the SCR.RE bit set to 1. The synchronization clock stops when it goes high[*1] and an overrun error occurs or the SCR.RE bit is set to 0.

When only data reception is performed and the CTS function is enabled, the clock output does not start when the SCR.RE bit set to 1 and the CTSn_RTSn pin input is high. The synchronization clock output starts when the SCR.RE bit is set to 1 and the CTSn_RTSn pin input is low. Following that, when the CTSn_RTSn pin input is high on completion of the frame reception, the synchronization clock output stops when it goes high. If the CTSn_RTSn pin input continues to be low, the synchronization clock stops when it goes high[*1] and an overrun error occurs or the SCR.RE bit is set to 0.

Note 1. The signal is held high while (SPMR.CKPH = 0 and SPMR.CKPOL = 1) or (SPMR.CKPH = 1 and SPMR.CKPOL = 1). It is held low while (SPMR.CKPH = 0 and SPMR.CKPOL = 1) or (SPMR.CKPH = 1 and SPMR.CKPOL = 0).

25.6.2 CTS and RTS Functions

In the CTS function, the CTSn_RTSn pin input controls the start of data reception or transmission when the clock source is the internal clock. Setting the SPMR.CTSE bit to 1 enables the CTS function. When the CTS function is enabled, setting the CTSn_RTSn pin low causes data reception or transmission to start.

Setting the CTSn_RTSn pin high while the data transmission or reception is in progress does not affect transmission or reception of the current frame.

In the RTS function, the CTSn_RTSn pin output is used to request the start of data reception or transmission when the clock source is an external synchronizing clock. The CTSn_RTSn output goes low when serial communication is enabled. Conditions for output of the CTSn_RTSn low and high are shown as follows:

[Conditions for low output]

Satisfaction of all the following conditions:

Non-FIFO selected when all of the following conditions are satisfied

- The value of the SCR.RE bit or the SCR.TE bit is 1
- Neither transmission nor reception is in progress
- There is no received data available to be read when the SCR.RE bit is 1
- Transmit data is written when the SCR.TE bit is 1 and SCR.CKE[1] bit is 0
- Data is available for transmission in the TSR register when SCR.TE bit is 1 and SCR.CKE[1] bit is 1
- The SSR.ORER flag is 0

FIFO selected when all of the following conditions are satisfied

- The value of the SCR.RE bit or the SCR.TE bit is 1
- Neither transmission nor reception is in progress
- The amount of receive data written in FRDRHL is less than the setting value of FCRH.RSTRG[3:0] when SCR.RE = 1
- Data that has not been transmitted is available in FTDRHL when SCR.TE bit is 1 and SCR.CKE[1] bit is 0
- Data is available for transmission in the TSR register when SCR.TE bit is 1 and SCR.CKE[1] bit is 1
- The SSR_FIFO.ORER flag is 0

[Condition for high output]

- The conditions for low output are not satisfied

25.6.3 SCI Initialization in Clock Synchronous Mode

Before transmitting and receiving data, start by writing the initial value 0x00 to the SCR register, then continue through the SCI initialization procedure given in the sections describing non-FIFO and FIFO selection in section 25.6.2. CTS and RTS Functions. Anytime the operating mode or transfer format is to be changed, the SCR register must be initialized before the change can be made.

Note: Setting the SCR.RE bit to 0 initializes neither the ORER, FER, and PER flags in SSR/SSR_FIFO nor the RDR register. When the TE bit is set to 0, the TEND flag for the selected FIFO buffer is not initialized.

Note: In non-FIFO mode, switching the value of the SCR.TE bit from 1 to 0 or 0 to 1 when the SCR.TIE bit is 1 generates an SCIn_TXI interrupt request.

Table 25.37 Example flow of SCI initialization in clock synchronous mode with non-FIFO selected (1 of 2)

No.	Step Name	Description
1	Start initialization	
2	Set the SCR.TIE, RIE, TE, RE, and TEIE bits to 0	
3	Set the FCR.FM bit to 0	Set the FCR.FM bit to 0.
4	Set the SCR.CKE[1:0] bits	Set the clock selection in SCR.
5	Set the SIMR1.IICM bit to 0. Set the SPMR.CKPH and CKPOL bits.	Set the SIMR1.IICM bit to 0. Set the SPMR.CKPH and CKPOL bits. Step 5 can be skipped if the values have not been changed from the initial values.

Table 25.37 Example flow of SCI initialization in clock synchronous mode with non-FIFO selected (2 of 2)

No.	Step Name	Description
6	Set the data transmission/ reception format in SMR, SCMR, and SEMR	Set data transmission/reception format in SMR, SCMR, and SEMR.
7	Set a value in SPTR	Set the communication terminals status in SPTR.
8	Set a value in BRR	Write a value corresponding to the bit rate to BRR. This step is not necessary if an external clock is used.
9	Set a value in MDDR	Write the value obtained by correcting a bit rate error in MDDR. This step is not necessary if the BRME bit in SEMR is set to 0 or an external clock is used.
10	Set the I/O port functions	Make I/O port settings to enable input and output functions as required for TXDn, RXDn, and SCKn pins.
11	Set the SCR.TE or RE bit to 1, and set the SCR.TIE and RIE bits	Set the SCR.TE or RE bit to 1. Also set the SCR.TIE and RIE bits. Setting the TE and RE bits allows TXDn and RXDn pins to be used.
12	Initialization completion	

Note: In simultaneous transmit and receive operations, the TE and RE bits in SCR must both be set to 0 or set to 1 simultaneously

Table 25.38 Example flow of SCI initialization in clock synchronous mode with FIFO selected

No.	Step Name	Description
1	Start initialization	
2	Set the SCR.TIE, RIE, TE, RE, and TEIE bits to 0	
3	Set the FCR.FM, TFRST, and RFRST bits to 1. Set the FCR.TTRG[3:0], RTRG[3:0], and RSTRG[3:0] bits.	Set the FCR.FM, TFRST, and RFRST bits to 1 (FIFO mode enabled, transmit/receive FIFOs empty). Set the FCR.TTRG[3:0], RTRG[3:0], and RSTRG[3:0] bits.
4	Set the SCR.CKE[1:0] bits	Set the clock selection in SCR.
5	Set the SIMR1.IICM bit to 0. Set the SPMR.CKPH and CKPOL bits.	Set the SIMR1.IICM bit to 0. Set the SPMR.CKPH and CKPOL bits. Step 5 can be skipped if the values have not been changed from the initial values.
6	Set the data transmission/ reception format in SMR, SCMR, and SEMR	Set data transmission/reception format in SMR, SCMR, and SEMR.
7	Set a value in SPTR	Set the communication terminals status in SPTR.
8	Set a value in BRR	Write a value corresponding to the bit rate to BRR. This step is not necessary if an external clock is used.
9	Set a value in MDDR	Write the value obtained by correcting a bit rate error in MDDR. This step is not necessary if the BRME bit in SEMR is set to 0 or an external clock is used.
10	Set the FCR.TFRST and RFRST bits to 0	Set the FCR.TFRST and RFRST bits to 0.
11	Set the I/O port functions	Make I/O port settings to enable input and output functions as required for TXDn, RXDn, and SCKn pins.
12	Set the SCR.TE or RE bit to 1, and set the SCR.TIE and RIE bits	Set the SCR.TE or RE bit to 1. Also set the SCR.TIE and RIE bits. Setting the TE and RE bits allows TXDn and RXDn pins to be used.
13	Initialization completion	

Note: In simultaneous transmit and receive operations, the TE and RE bits in SCR must both be set to 0 or set to 1 simultaneously.

25.6.4 Serial Data Transmission in Clock Synchronous Mode

(1) Non-FIFO selected

Figure 25.67, Figure 25.68, and Figure 25.69 show examples of serial transmission in clock synchronous mode.

In serial data transmission, the SCI operates as follows:

1. The SCI transfers data from the TDR register to the TSR register when data is written to TDR in the SCIn_TXI interrupt handling routine. The SCIn_TXI interrupt request at the beginning of transmission is generated when the TE bit is set to 1 but only after the TIE bit in the SCR is also set to 1 or when these two bits are set to 1 simultaneously by a single instruction.
2. After transferring data from TDR to TSR, the SCI starts transmission. When the SCR.TIE bit is set to 1, an SCIn_TXI interrupt request is generated. Continuous transmission is enabled by writing the next transmit data to TDR in the SCIn_TXI interrupt handling routine before transmission of the current transmit data finishes. When SCIn_TEI interrupt requests are in use, set the SCR.TIE bit to 0 and the SCR.TEIE bit to 1 after the last of the data to be transmitted is written to the TDR register from the handling routine for SCIn_TXI requests.
3. 8-bit data is sent from the TXDn pin in synchronization with the output clock when the clock output mode is specified and in synchronization with the input clock when the use of an external clock is specified. Output of the clock signal is suspended until the input CTS signal is low when the SPMR.CTSE bit is 1.
4. The SCI checks for update to the TDR register on output of the last bit.
5. When the TDR register is updated, the next transmit data is transferred from TDR to TSR, and serial transmission of the next frame starts.
6. If TDR is not updated, the SSR.TEND flag is set to 1. The TXDn pin retains the output state of the last bit. If the SCR.TEIE bit is 1, an SCIn_TEI interrupt request is generated and the SCKn pin is held high.

Figure 25.67, Figure 25.68, and Figure 25.69 show examples of serial data transmission.

Transmission does not start while a receive error flag (ORER, FER, or PER in SSR) is set to 1. Always set the receive error flags to 0 before starting transmission.

Note: Setting the SCR.RE bit to 0 does not clear the receive error flags.

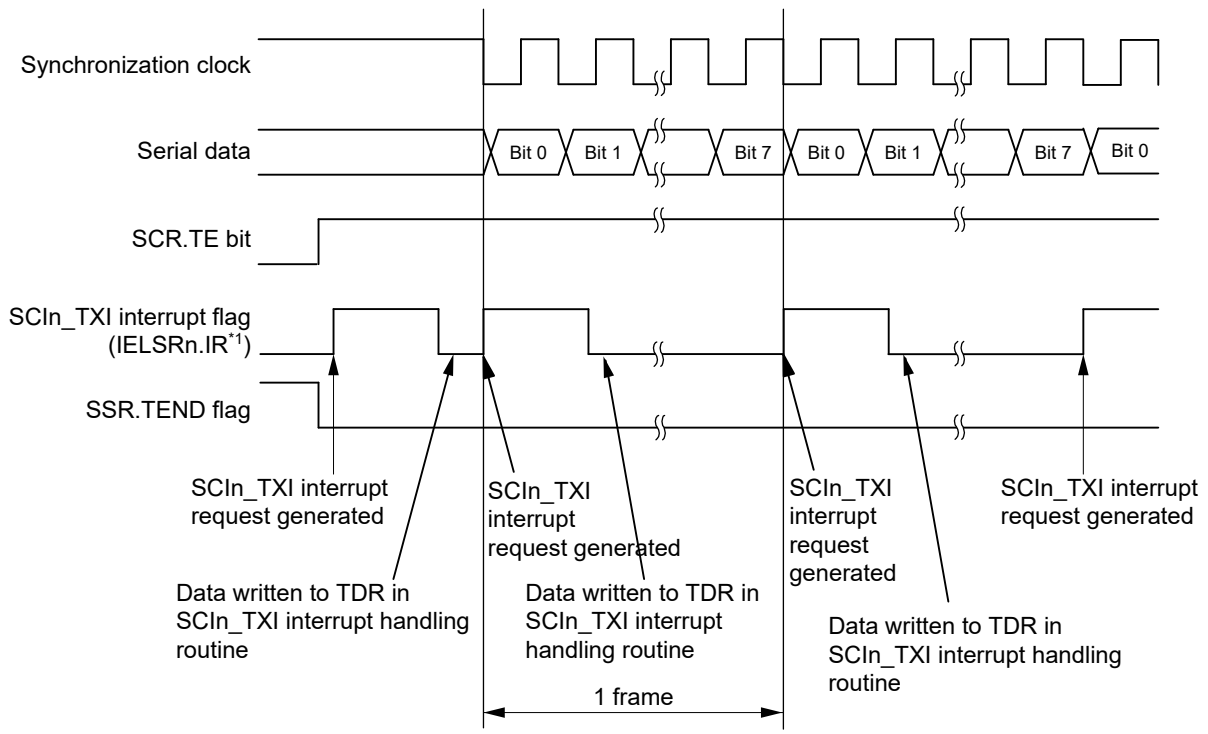

Note 1. See section 12, Interrupt Controller Unit (ICU) for information on the corresponding interrupt event number.

Figure 25.67 Example of serial data transmission in clock synchronous mode when the CTS function is not used at the beginning of transmission

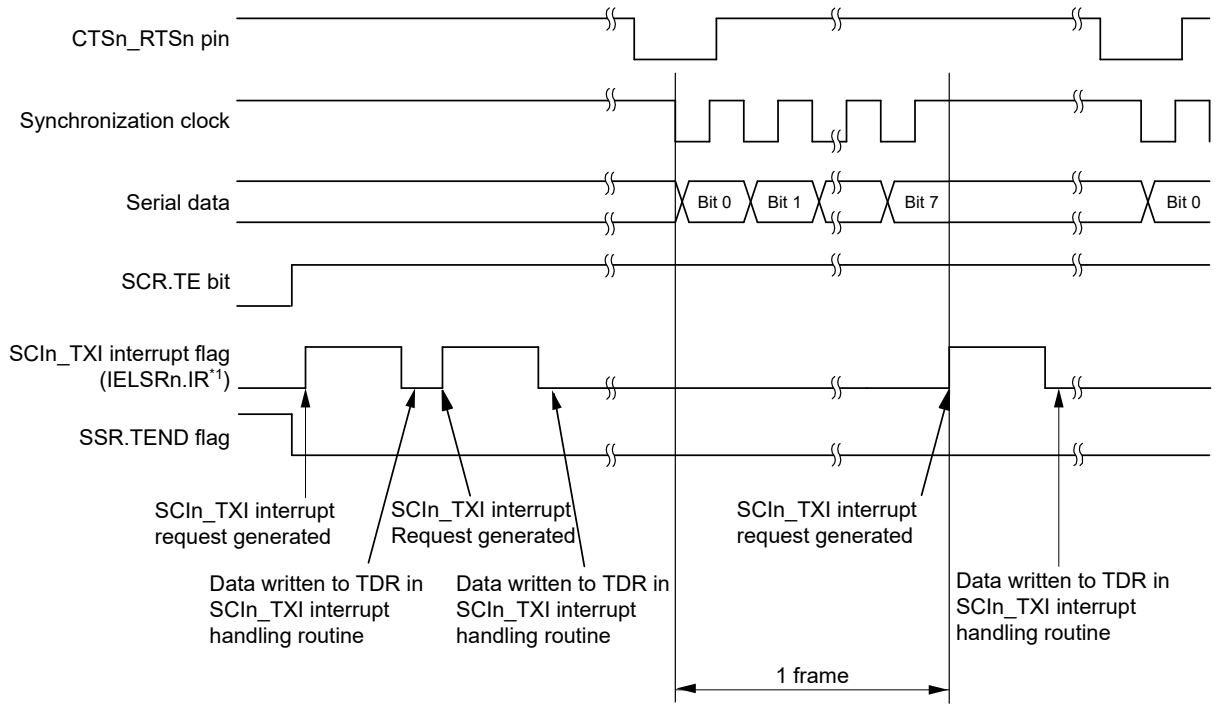

Note 1. See section 12, Interrupt Controller Unit (ICU) for information on the corresponding interrupt event number.

Figure 25.68 Example of serial data transmission in clock synchronous mode when the CTS function is used at the beginning of transmission

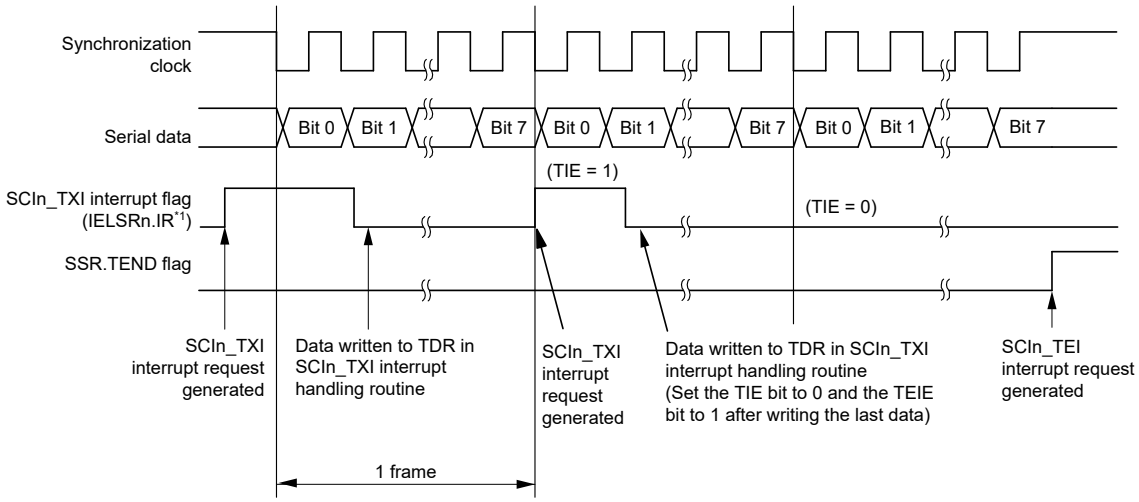

Note 1. See section 12, Interrupt Controller Unit (ICU) for information on the corresponding interrupt event number.

Figure 25.69 Example of serial data transmission in clock synchronous mode from the middle of transmission until transmission completion

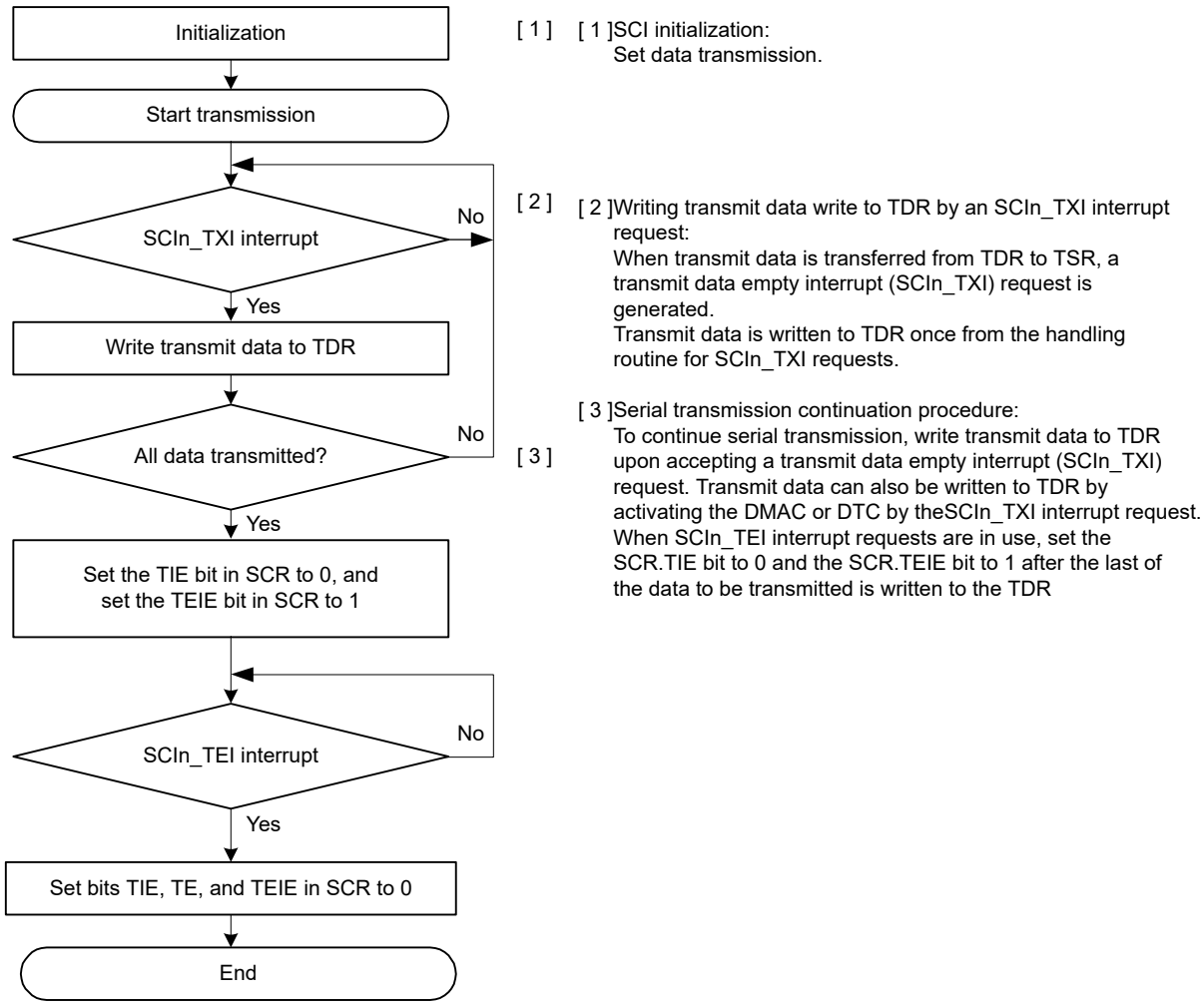

Figure 25.70 Example flow of serial transmission in clock synchronous mode with non-FIFO selected

(2) FIFO selected

Figure 25.71 shows an example of serial transmission in clock synchronous mode with FIFO selected.

In serial data transmission, the SCI operates as follows:

1. The SCI transfers data from the FTDRL[*1] register to the TSR register when data is written to FTDRL[*1] in the SCIn_TXI interrupt handling routine. The amount of data that can be written to FTDRL is 16 minus FDR.T[4:0] bytes. The SCIn_TXI interrupt request at the beginning of transmission is generated when the SCR.TE bit is set to 1 but only after the SCR.TIE bit is also set to 1 or when these two bits are set to 1 simultaneously by a single instruction.
2. After transferring data from FTDRL to TSR, the SCI starts transmission. When the amount of transmit data written in FTDRL is equal to or less than the specified transmit triggering number, the SSR_FIFO.TDFE is set to 1. When the SCR.TIE bit is set to 1, an SCIn_TXI interrupt request is generated. Continuous transmission is enabled by writing the next transmit data to FTDRL in the SCIn_TXI interrupt handling routine before transmission of the current transmit data has finished. When SCIn_TEI interrupt requests are in use, set the SCR.TIE bit to 0 and the SCR.TEIE bit to 1 after the last of the data to be transmitted is written to the FTDRL from the handling routine for SCIn_TXI requests.
3. 8-bit data is sent from the TXDn pin in synchronization with the output clock when the clock output mode is specified and in synchronization with the input clock when the use of an external clock is specified. Output of the clock signal is suspended until the input CTS signal is low when the SPMR.CTSE bit is 1.
4. The SCI checks whether non-transmitted data remains in FTDRL on output of the stop bit.

5. When FTDRL is updated, the next transmit data is transferred from FTDRL to TSR and serial transmission of the next frame starts.
6. If FTDRL is not updated, the SSR_FIFO.TEND flag is set to 1. The TXDn pin retains the output state of the last bit. If the SCR.TEIE bit is 1, an SCIn_TEI interrupt request is generated and the SCKn pin is held high.

Note 1. In clock synchronous mode, FTDRH is not used.

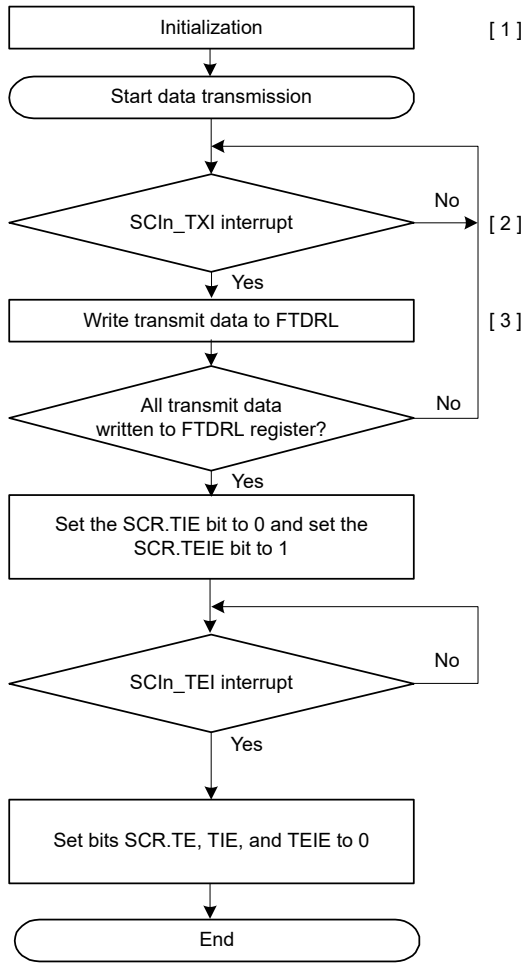

[1]SCI initialization:
Set data transmission.
After the TE bit in SCR is set to 1, 1 is output for a frame, and transmission is enabled.

[2]Transmit data write to FTDRL by an SCIn_TXI interrupt request:
For transmission data from FTDRL to TSR, when the amount of transmit data written in FTDRL is equal to or less than the specified transmit triggering number, a transmit data FIFO empty interrupt (SCIn_TXI) request is generated. Write transmit data to FTDRL once in the SCIn_TXI interrupt handling routine.

[3]Serial transmission continuation procedure:
To continue serial transmission, write the next transmit data to FTDRL in this SCIn_TXI interrupt handling routine and clear the SSR_FIFO.TDFE flag to 0 before transmission of the current transmit data finishes.
Transmit data can also be written to FTDRL by activating the DMAC or DTC. The TDFE flag is cleared automatically in this case. Do not write to the TDFE flag.
When SCIn_TEI interrupt requests are in use, set the SCR.TIE bit to 0 and the SCR.TEIE bit to 1 after the last of the data to be transmitted is written to the FTDRL.

Note: When the external clock is in use (the value of the SCR.CKE[1:0] bits is 10b or 11b), the rising edge on the SCKn pin for the last bit sets the SSR_FIFO.TEND flag to 1. Setting the SCR.TE bit to 0 immediately after this might lead to insufficient received-data hold time on the receiver side.

Figure 25.71 Example flow of serial transmission in clock synchronous mode with FIFO selected

25.6.5 Serial Data Reception in Clock Synchronous Mode

(1) Non-FIFO selected

Figure 25.72 and Figure 25.73 show examples of SCI operation for serial reception in clock synchronous mode.

In serial data reception, the SCI operates as follows:

1. When the value of the SCR.RE bit becomes 1, the CTSn_RTSn pin goes low.
2. The SCI performs internal initialization and starts receiving data in synchronization with a synchronization clock input or output, and stores the receive data in the RSR register.
3. If an overrun error occurs, the SSR.ORER flag is set to 1. If the SCR.RIE bit is 1, an SCIn_ERI interrupt request is generated. Receive data is not transferred to the RDR register.

4. When reception completes successfully, receive data is transferred to the RDR register. If the SCR.RIE bit is 1, an SCIn_RXI interrupt request is generated. Continuous reception is enabled by reading the received data transferred to the RDR register in the SCIn_RXI interrupt handling routine before reception of the next receive data completes. Reading the received data that is transferred to RDR causes the CTSn_RTSn pin to output low.

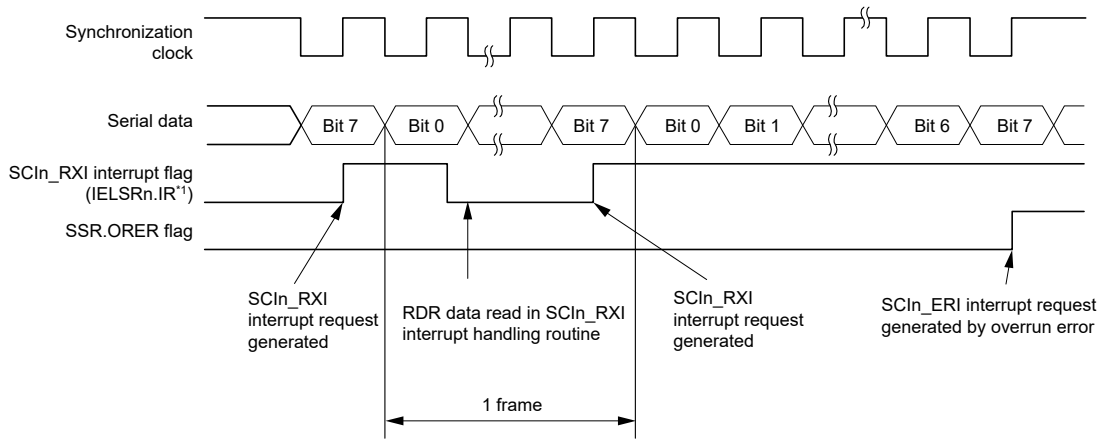

Note 1. See section 12, Interrupt Controller Unit (ICU) for information on the corresponding interrupt event number.

Figure 25.72 Example operation for serial reception in clock synchronous mode (1) when the RTS function is not used

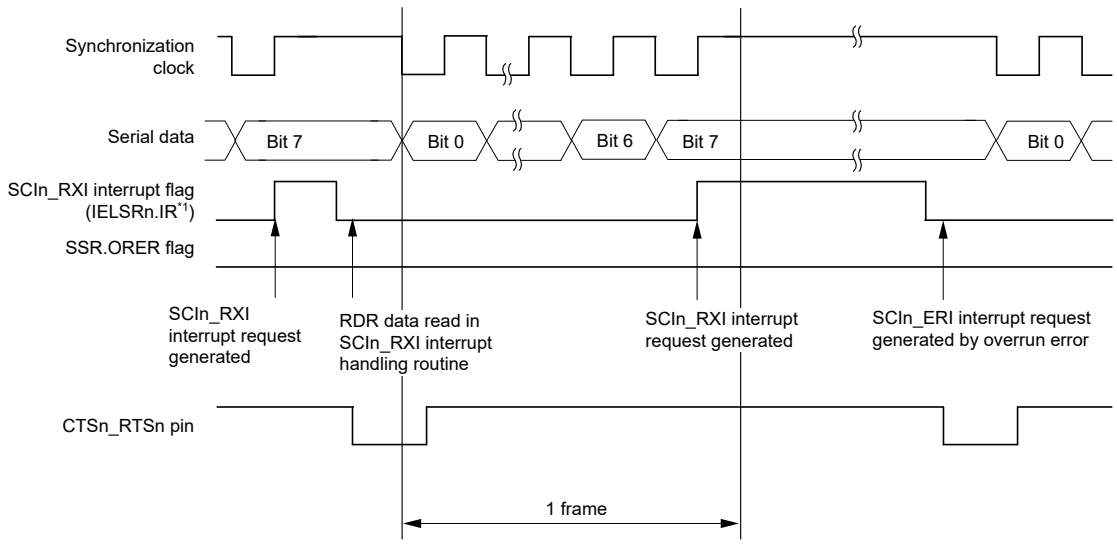

Note 1. See section 12, Interrupt Controller Unit (ICU) for information on the corresponding interrupt event number.

Figure 25.73 Example operation for serial reception in clock synchronous mode (2) when RTS function is used

Data transfer cannot resume while the receive error flag is 1. Therefore, clear the ORER, FER, and PER flags in the SSR register to 0 before resuming data reception. Additionally, always read the RDR register during overrun error processing. When a data reception is forced to terminate by a 0 write to the SCR.RE bit during operation, read the RDR register because received data that is not yet read might be left in the RDR register.

Figure 25.74 shows an example flow of serial data reception.

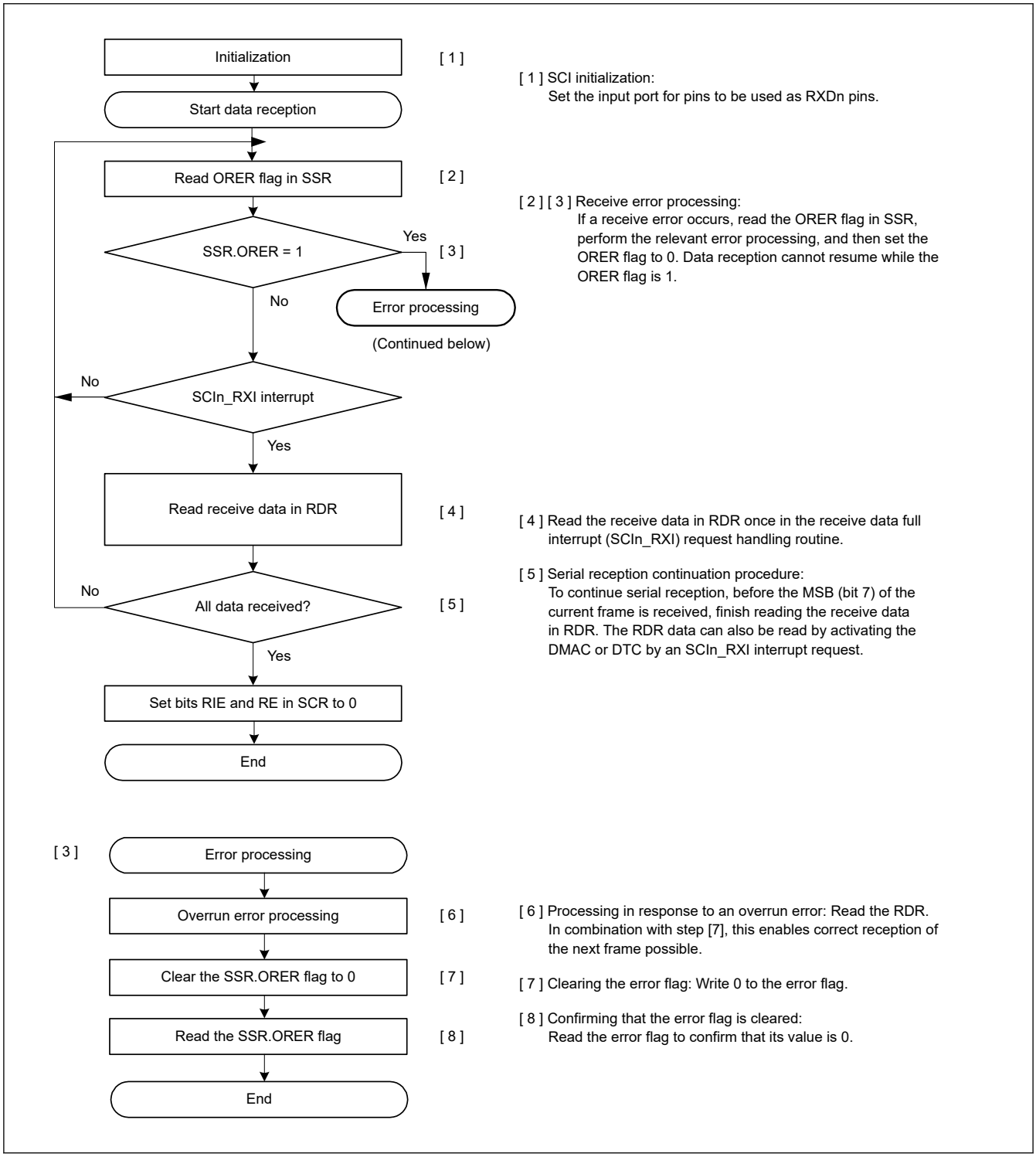

Figure 25.74 Example flow of serial reception in clock synchronous mode with non-FIFO selected

(2) FIFO selected

Figure 25.75 shows an example of serial reception in clock synchronous mode with FIFO selected.

In serial data reception, the SCI operates as follows:

1. When the value of the SCR.RE bit becomes 1, the CTSn_RTSn pin goes low.
2. The SCI performs internal initialization and starts receiving data in synchronization with a synchronization clock input or output, and stores the receive data in the RSR register.

3. If an overrun error occurs, the SSR_FIFO.ORER flag is set to 1. If the SCR.RIE bit is 1, an SCIn_ERI interrupt request is generated. Received data is not transferred to the FRDRL[*1] register.
4. When data reception completes successfully, the receive data is transferred to the FRDRL[*1] register. The RDF flag is set to 1 when the amount of the receive data stored in FRDRL is equal to or greater than the specified receive triggering number. If the SCR.RIE bit is 1, an SCIn_RXI interrupt request is generated. Continuous data reception is enabled by reading the receive data transferred to FRDRL[*2] in the SCIn_RXI interrupt handling routine before an overrun error occurs. If the amount of received data that is transferred to FRDRL is less than the specified receive triggering number, the CTSn_RTSn pin goes low.

Note 1. In clock synchronous mode, FRDRH is not used.
Note 2. Read data in order from FRDRH to FRDRL when RDF and ORER are read with receive data.

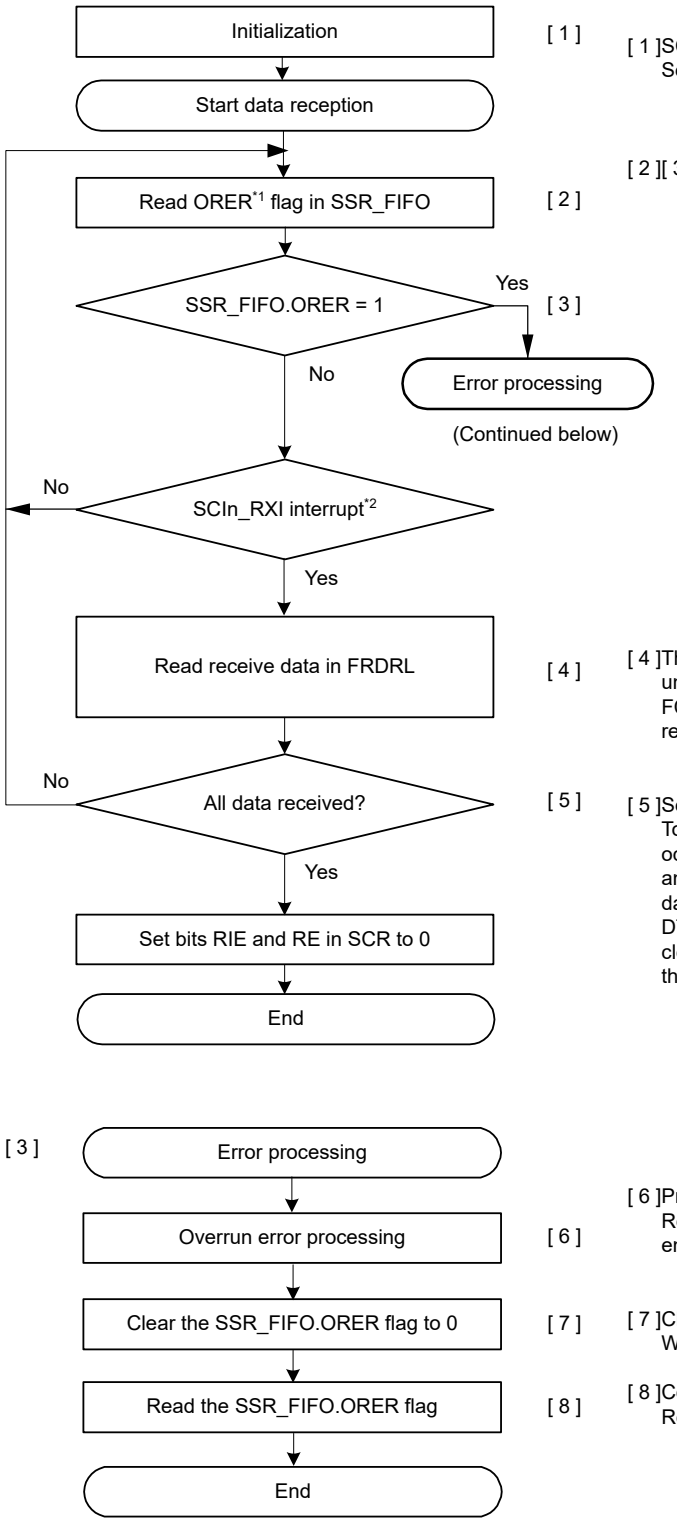

[1]SCI initialization:
Set the input port for pins to be used as RXDn pins.

[2][3]Receive error processing:
If a receive error occurs, read the ORER flag in SSR_FIFO, perform the relevant error processing, then set the SSR_FIFO.ORER flag to 0. Data reception cannot resume while the ORER flag is 1.

[4]The receive data stored in FRDRL register is read until the amount of stored data is less than the FCR.RTRG[3:0] value. Software can check readable data in FDR.R[4:0].

[5]Serial reception continuation procedure:
To continue serial reception, before overrun error occurs, finish reading the receive data in FRDRL and clear the SSR_FIFO.RDF flag to 0.The FRDRL data can also be read by activating the DMAC or DTC by an SCIn_RXI interrupt request. The RDF flag is cleared automatically in this case. Do not write to the RDF flag.

[6]Processing in response to an overrun error:
Read the FRDRL. In combination with step [7], this enables correct reception of the next frame possible.

[7]Clearing the error flag:
Write 0 to the error flag.

[8]Confirming that the error flag is cleared:
Read the error flag to confirm that its value is 0.

Note 1. It can also be read from FRDRH.ORER. However, to clear the ORER flag, write 0 to the associated bit in the SSR_FIFO register.
Note 2. It should be all receive data and is an integer times the FIFO triggering number.

Figure 25.75 Example flow of serial reception in clock synchronous mode with FIFO selected

25.6.6 Simultaneous Serial Data Transmission and Reception in Clock Synchronous Mode

(1) Non-FIFO selected

Figure 25.76 shows an example flow of simultaneous serial transmit and receive operations in clock synchronous mode. After initializing the SCI, use the following procedure for simultaneous serial data transmit and receive operations.

To switch from transmit mode to simultaneous transmit and receive mode:

1. Check that the SCI completes the data transmission by verifying that the SSR.TEND flag is set to 1.
2. Initialize the SCR register, and then set the TIE, RIE, TE, and RE bits in the SCR register to 1 simultaneously by a single instruction.

To switch from receive mode to simultaneous transmit and receive mode:

1. Check that the SCI completes the data reception.
2. Set the RIE and RE bits to 0, and then check that the receive error flag ORER in the SSR register is 0.
3. Set the TIE, RIE, TE, and RE bits in the SCR register to 1 simultaneously by a single instruction.

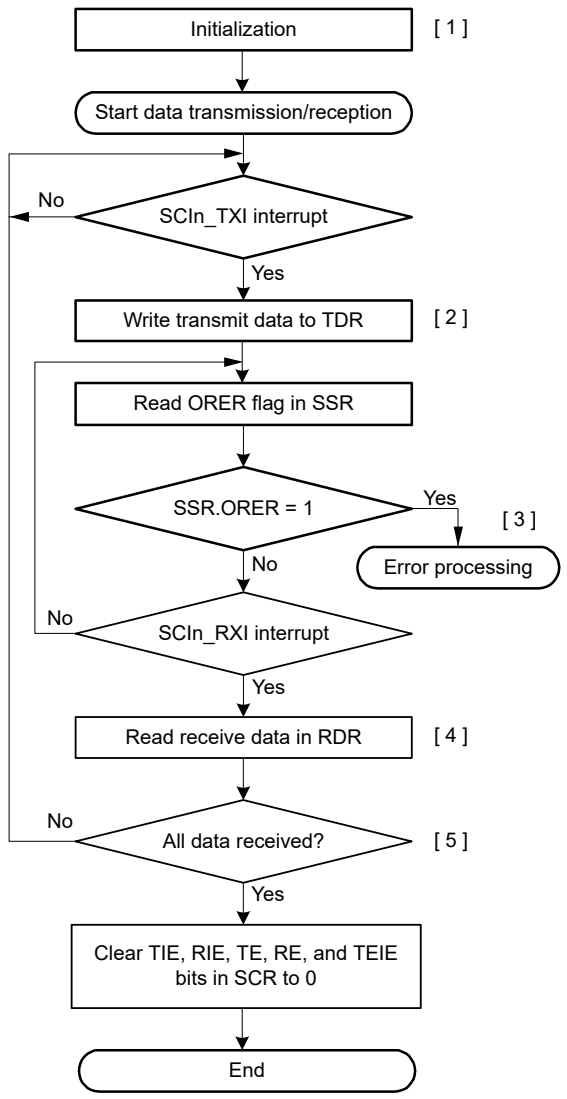

[1] SCI initialization:
The TXDn pin can act as the output pin for transmitted data and the RXDn pin can act as the input pin for received data at the same time.

[2] Transmit data write:
Write transmit data to TDR once in the SCIn_TXI interrupt request handling routine.

[3] Receive error processing:
If a receive error occurs, read the ORER flag in SSR, perform the relevant error processing, then set the ORER flag to 0. Data reception cannot resume while the ORER flag is 1.

[4] Reading receive data:
Read the receive data in RDR once in the SCIn_RXI interrupt request handling routine.

[5] Serial transmission/reception continuation procedure:
To continue serial transmission and reception, before the MSB bit 7 of the current frame is received, finish reading the receive data in RDR by the SCIn_RXI interrupt. Also, before the MSB bit 7 of the current frame is transmitted, write data to TDR by the SCIn_TXI interrupt.
Transmit data can also be written to TDR by activating the DMAC or DTC by a transmit data empty interrupt (SCIn_TXI) request. Similarly, the RDR data can also be read by activating the DMAC or DTC by a receive data full interrupt (SCIn_RXI) request.

Note: When switching from transmit or receive operation to simultaneous transmit and receive operations, first set the TIE, RIE, TE, RE, and TEIE bits in SCR to 0, then set TIE, RIE, TE, and RE bits to 1 simultaneously.

Figure 25.76 Example flow of simultaneous serial transmission and reception in clock synchronous mode with non-FIFO selected

(2) FIFO selected

Figure 25.77 shows an example flow of simultaneous serial transmit and receive operations in clock synchronous mode with FIFO selected.

After initializing the SCI, use the following procedure for simultaneous serial data transmit and receive operations.

To switch from transmit mode to simultaneous transmit and receive mode:

1. Check that the SCI completes the transmission by verifying that the SSR_FIFO.TEND flag is set to 1.
2. Initialize the SCR register, then set the TIE, RIE, TE, and RE bits in the SCR register to 1 simultaneously by a single instruction.

To switch from receive mode to simultaneous transmit and receive mode:

1. Check that the SCI completes the reception.

2. Set the RIE and RE bits to 0.
3. Check that the receive error flags ORER in the SSR_FIFO register are 0, and then set the TIE, RIE, TE, and RE bits in the SCR register to 1 simultaneously by a single instruction.

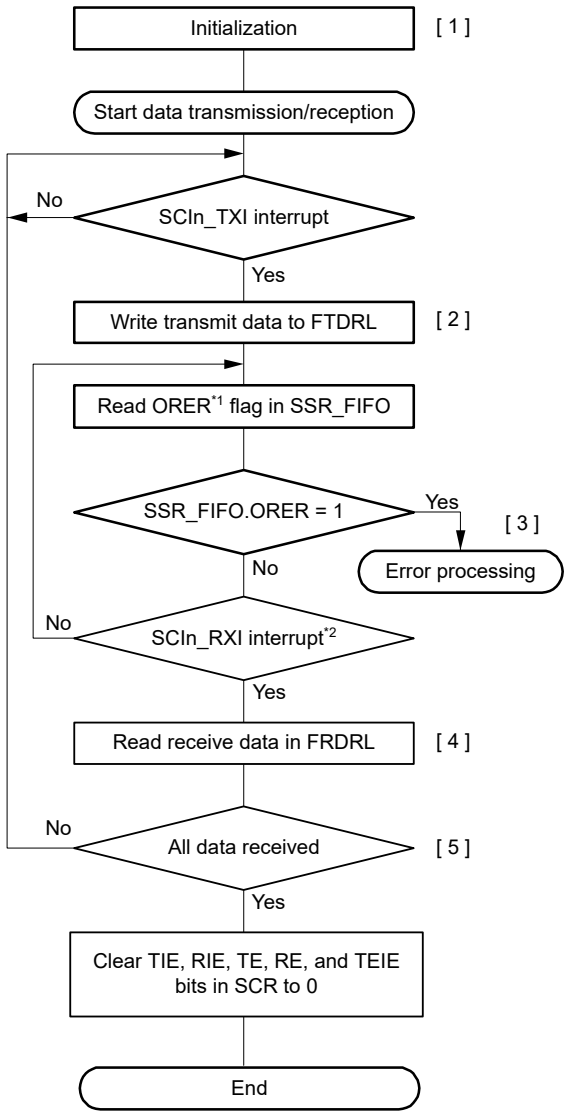

[1] SCI initialization:
The TXDn pin can act as the output pin for transmitted data and the RXDn pin can act as the input pin for received data at the same time.

[2] Transmit data write:
Write transmit data to FTDRL in the SCIn_TXI interrupt request handling routine. The number of transmission data that can be written is 16 bits, which is the number of stored transmit data in the FIFO.

[3] Receive error processing:
If a receive error occurs, read the ORER flag in SSR_FIFO, perform the relevant error processing, and then set the ORER flag to 0. Data reception cannot resume while the ORER flag is 1.

[4] Reading receive data:
The reception data stored in FRDRL register is read until the number of stored data is less than the FCR.RTRG value. Software can check readable data in FDR.R[4:0].

[5] Serial transmission/reception continuation procedure:
To continue serial reception, before overrun error occurs, finish reading the receive data in FRDRL and clear the SSR_FIFO.RDF flag to 0. To continue serial transmission, before transmission of the current transmit data is finished, write the next transmit data to FTDRL in the SCIn_TXI interrupt handling routine and clear the SSR_FIFO.TDFE flag to 0.
Transmit data can also be written to FTDRL by activating the DMAC or DTC by a transmit FIFO data empty interrupt (SCIn_TXI) request. Similarly, the FRDRL data can also be read by activating the DMAC or DTC by a receive FIFO data full interrupt (SCIn_RXI) request. The RDF and TDFE flags are cleared automatically in this case. Do not write to the RDF and TDFE flags.

Note 1. It can also be read from FRDRH.ORER. To clear the ORER flag, write 0 to the associated bit in the SSR_FIFO register.
Note 2. It should be all receive data with amount an integer times FIFO triggering number.

Figure 25.77 Example flow of simultaneous serial transmission and reception in clock synchronous mode with FIFO selected

25.7 Operation in Smart Card Interface Mode

The SCI supports smart card (IC card) interfaces conforming to ISO/IEC 7816-3 (standard for Identification Cards), as an extended function of the SCI.

Smart card interface mode can be selected using the appropriate register.

25.7.1 Example Connection

Figure 25.78 shows an example connection between a smart card (IC card) and the MCU. As shown in Figure 25.78, because the MCU communicates with an IC card using a single transmission line, interconnect the TXDn and RXDn pins and pull up the data transmission line to VCC using a resistor.

Setting the SCR_SMCI.TE and SCR_SMCI.RE bits to 1 with an IC card disconnected enables closed-loop transmission or reception, allowing self-diagnosis. To supply an IC card with the clock pulses generated by the SCI, input the SCKn pin output to the CLK pin of an IC card.

An output port of the MCU can be used to output a reset signal.

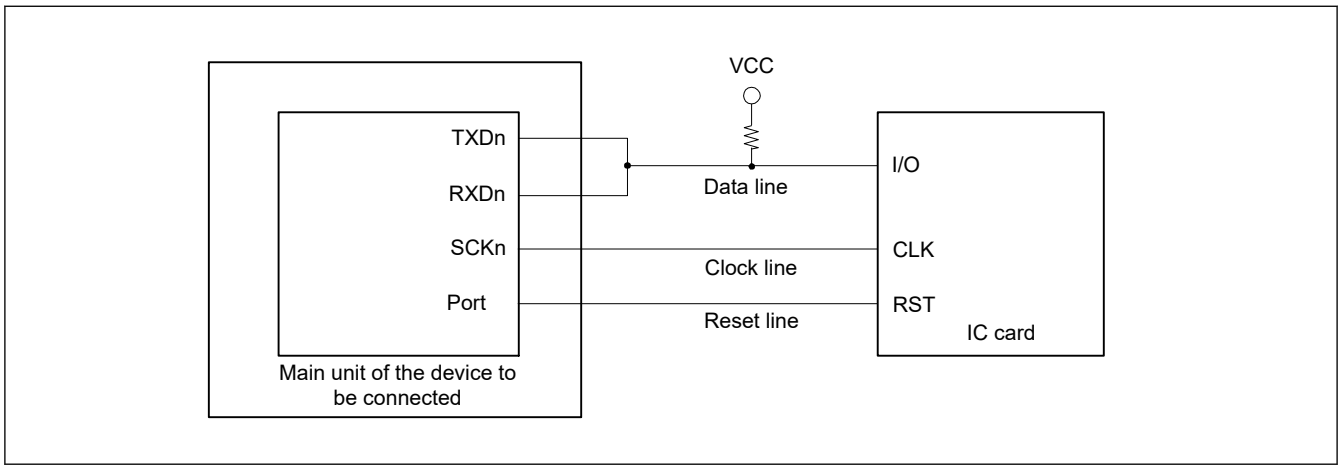

Figure 25.78 Example connection with a smart card (IC card)

25.7.2 Data Format (Except in Block Transfer Mode)

Figure 25.79 shows the data transfer formats in smart card interface mode:

- One frame consists of 8-bit data and a parity bit in asynchronous mode.
- During transmission, at least 2 etus (elementary time unit – the time required for transferring 1 bit) is set as a guard time from the end of the parity bit until the start of the next frame.
- If a parity error is detected during reception, a low error signal is output for 1 etu after 10.5 etus elapse from the start bit.
- If an error signal is sampled during transmission, the same data is automatically retransmitted after at least 2 etus.

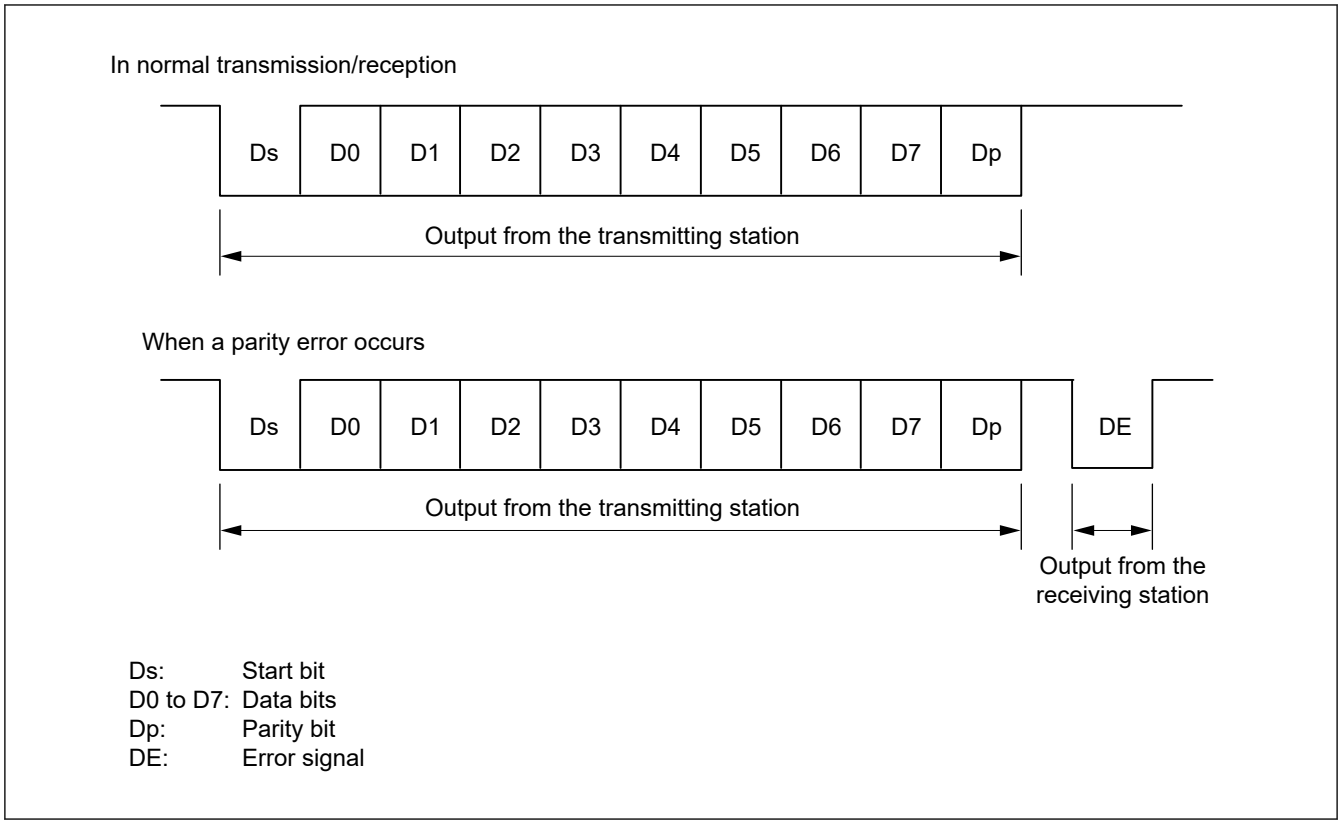

Figure 25.79 Data formats in smart card interface mode

For communications with IC cards of the direct convention type and inverse convention type, follow the procedures in this section.

(1) Direct Convention Type

For the direct convention type, logic levels 1 and 0 indicate the Z and A states, respectively, and data is transferred with LSB-first for the start character, as shown in Figure 25.80. Therefore, data in the start character in the figure is 0x3B.

When using the direct convention type, write 0 to both the SCMR.SDIR and SCMR.SINV bits. Write 0 to the SMR_SMCI.PM bit to use even parity, which is prescribed by the smart card standard.

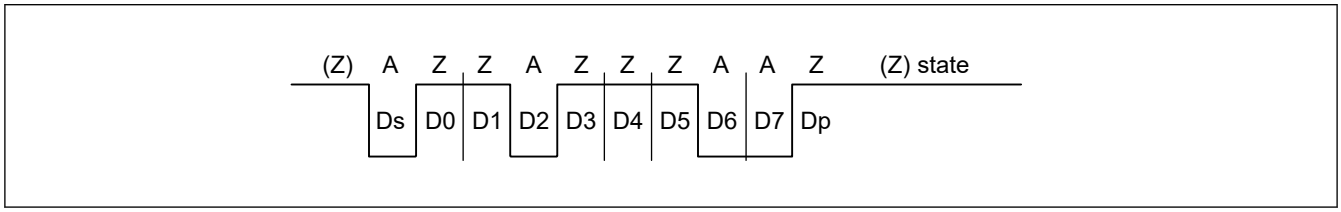

Figure 25.80 Direct convention with SDIR in SCMR = 0, SINV in SCMR = 0, and PM in SMR_SMCI = 0

(2) Inverse Convention Type

For the inverse convention type, logic levels 1 and 0 indicate the A and Z states, respectively, and data is transferred with MSB-first for the start character, as shown in Figure 25.81. Therefore, data in the start character in the figure is 0x3F.

When using the inverse convention type, write 1 to both the SCMR.SDIR and SCMR.SINV bits. The parity bit is logic level 0 to produce even parity, which is prescribed by the smart card standard, and corresponds to the Z state. Because the SINV bit of the MCU only inverts data bits D7 to D0, write 1 to the PM bit in SMR_SMCI to invert the parity bit for both transmission and reception.

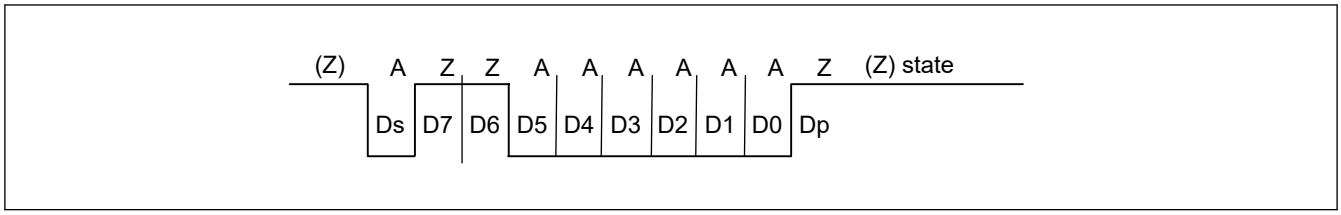

Figure 25.81 Inverse convention with SDIR in SCMR = 1, SINV in SCMR = 1, and PM in SMR_SMCI = 1

25.7.3 Block Transfer Mode

Block transfer mode differs from normal smart card interface mode as follows:

- Even if a parity error is detected during reception, no error signal is output. Because the PER flag in SSR_SMCI is set by error detection, clear the PER flag before receiving the parity bit of the next frame.
- During transmission, at least 1 etu is set as a guard time from the end of the parity bit until the start of the next frame
- Because the same data is not retransmitted, the TEND flag in SSR_SMCI is set to 11.5 etus after transmission starts
- In block transfer mode, the ERS flag in SSR_SMCI indicates the error signal status as in normal smart card interface mode, but the flag is read as 0 because no error signal is transferred

25.7.4 Receive Data Sampling Timing and Reception Margin

Only the internal clock generated by the on-chip baud rate generator can be used as a transfer clock in smart card interface mode.

In this mode, the SCI can operate on a base clock with a frequency of 32, 64, 372, 256, 93, 128, 186, or 512 times the bit rate set up in the SCMR.BCP2 and the SMR_SMCI.BCP[1:0] bits. The frequency is always 16 times the bit rate in normal asynchronous mode.

For data reception, the falling edge of the start bit is sampled with the base clock to perform internal synchronization.

Receive data is sampled on the 16th, 32nd, 186th, 128th, 46th, 64th, 93rd, and 256th rising edges of the base clock so that it can be latched at the middle of each bit as shown in Figure 25.82. The reception margin is determined by the following formula:

$$M = \left|\left(0.5 - \frac{1}{2N}\right) - (L - 0.5)F - \frac{|D - 0.5|}{N}(1 + F)\right| \times 100\ [\%]$$

M: Reception margin (%)

N: Ratio of bit rate to clock ($N = 32, 64, 372, 256$)

D: Duty cycle of clock ($D = 0$ to 1.0)

L: Frame length ($L = 10$)

F: Absolute value of clock frequency deviation

Assuming values of F = 0, D = 0.5, and N = 372 in the specified formula, the reception margin is determined using the following formula:

$$M = \{0.5 - 1/(2 \times 372)\} \times 100\ [\%] = 49.866\ \%$$

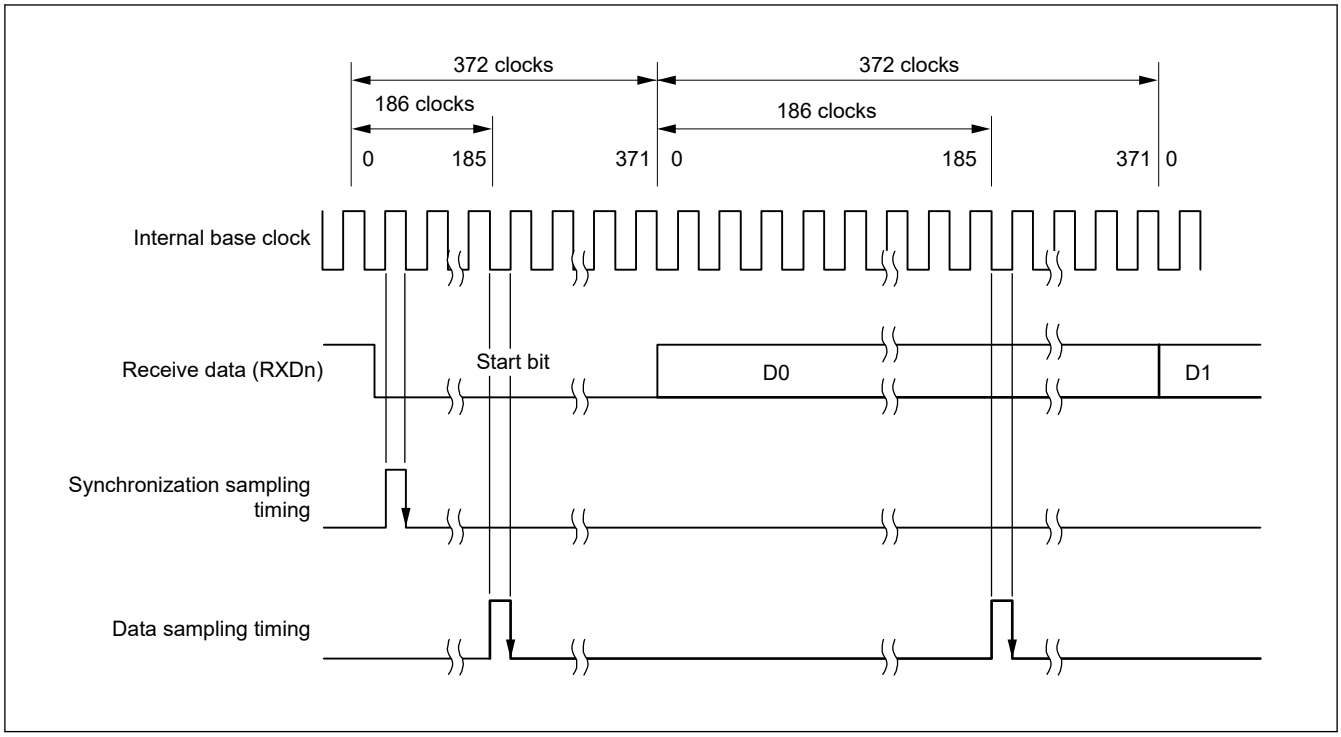

Figure 25.82 Receive data sampling timing in smart card interface mode when the clock frequency is 372 times the bit rate

25.7.5 SCI Initialization (Smart Card Interface Mode)

Before transmitting and receiving data, write the initial value 0x00 in the SCR_SMCI register and initialize the SCI following the example flow shown in Table 25.39.

Always set the initial value in the TIE, RIE, TE, RE, TEIE bits in the SCR_SMCI register before switching from transmission to reception mode or from reception to transmission mode. When SCR_SMCI.RE is set to 0, the RDR register is not initialized.

To change from reception mode to transmission mode, first check that reception has completed, then initialize the SCI. At the end of initialization, set SCR_SMCI.TE = 1 and SCR_SMCI.RE = 0. Reception completion can be verified by reading the SCIn_RXI request, ORER, or PER flag in SSR_SMCI.

To change transmission mode to reception mode, first check that transmission has completed, then initialize the SCI. At the end of initialization, set SCR_SMCI.TE = 0 and SCR_SMCI.RE = 1. Transmission completion can be verified by reading the TEND flag in SSR_SMCI.

Table 25.39 Example flow of SCI initialization in smart card interface mode (1 of 2)

No.	Step Name	Description
1	Start initialization	
2	Set SCR_SMCI.TIE, RIE, TE, RE, TEIE, and CKE[1:0] to 0	Stop the communication and initialize SKE[1:0].
3	Set SIMR1.IICM bit to 0. Set SCMR.SMIF to 1.	Set to smart card interface mode.
4	Set SSR_SMCI.ORER, ERS, PER to 0	Write to SSR_SMCI after reading SSR_SMCI.
5	Set SPMR.CKPH, CKPOL	Set the transmission or reception format in SPMR.
6	Set SMR_SMCI.GM, BLK, PM, BCP[1:0], CKS[1:0], and set SMR_SMCI.PE to 1	Set the operation mode and the transmission or reception format in SMR_SMCI.
7	Set SCMR.BCP2, SDIR, SINV	Set the transmission or reception format in SCMR.
8	Set SPTR to the initial value.	Set the Initial value to SPTR.

Table 25.39 Example flow of SCI initialization in smart card interface mode (2 of 2)

No.	Step Name	Description
9	Set SEMR.BRME and SEMR.RXDESEL to 0	Set SEMR.BRME and SEMR.RXDESEL to 0.
10	Set a value in BRR	Write the value for the bit rate in BRR.
11	Set the I/O port functions	Set the I/O port functions for TXDn, RXDn, and SCKn.
12	Set a value in SCR_SMCI.CKE[1:0]	Set the SCR_SMCI.CKE[1:0]. Even though the function depends on SMR_SMCI.GM, when the CKE[0] bit is set to 1, the clock is output from the SCKn pin.
13	Set SCR_SMCI.TE or RE to 1, and set SCR_SMCI.TIE, RIE	Set the TE or RE bit in SCR_SMCI to 1, then set the TIE and RIE bits in SCR_SMCI. Do not simultaneously set the TE and RE bits to 1 if self-diagnosis is not used.
14	Initialization completed	

25.7.6 Serial Data Transmission (Except in Block Transfer Mode)

Serial data transmission in smart card interface mode (except in block transfer mode) is different from that in non-smart card interface mode, in that an error signal is sampled and data can be re-transmitted in smart card mode. Figure 25.83 shows the data re-transfer operation during transmission.

1. When an error signal from the receiver end is sampled after 1-frame data is transmitted, the SSR_SMCI.ERS flag is set to 1. If the SCR_SMCI.RIE bit is 1, an SCIn_ERI interrupt request is generated. Clear the ERS flag to 0 before the next parity bit is sampled.
2. For a frame in which an error signal is received, the SSR_SMCI.TEND flag is not set. Data is re-transferred from TDR to TSR, allowing automatic data retransmission.
3. If no error signal is returned from the receiver, the ERS flag is not set to 1.
4. In this case, the SCI determines that transmission of 1-frame data, including the re-transfer, is complete, and the TEND flag is set. If the SCR_SMCI.TIE bit is 1, an SCIn_TXI interrupt request is generated. Write transmit data to the TDR to start transmission of the next data.

Figure 25.85 shows an example flow of serial transmission. All the processing steps are automatically performed using an SCIn_TXI interrupt request to activate the DTC or DMAC.

When the SSR_SMCI.TEND flag is set to 1 in transmission and when the SCR_SMCI.TIE bit is 1, an SCIn_TXI interrupt request is generated.

The DTC or DMAC is activated by an SCIn_TXI interrupt request if the SCIn_TXI interrupt request is previously specified as a source of DTC or DMAC activation, allowing the transfer of transmit data. The TEND flag is automatically set to 0 when the DTC or DMAC transfers the data.

If an error occurs, the SCI automatically retransmits the same data. During this retransmission, the TEND flag is kept at 0 and the DTC or DMAC is not activated. Therefore, the SCI and DTC or DMAC automatically transmit the specified number of bytes, including retransmission when an error occurs. Because the ERS flag is not automatically cleared, set the RIE bit to 1 before enabling an SCIn_ERI interrupt request to be generated if an error occurs, and clear the ERS flag to 0.

When transmitting or receiving data using the DTC or DMAC, always enable the DTC or DMAC before making the SCI settings.

For DTC or DMAC settings, see section 16, Data Transfer Controller (DTC), section 15, DMA Controller (DMAC).

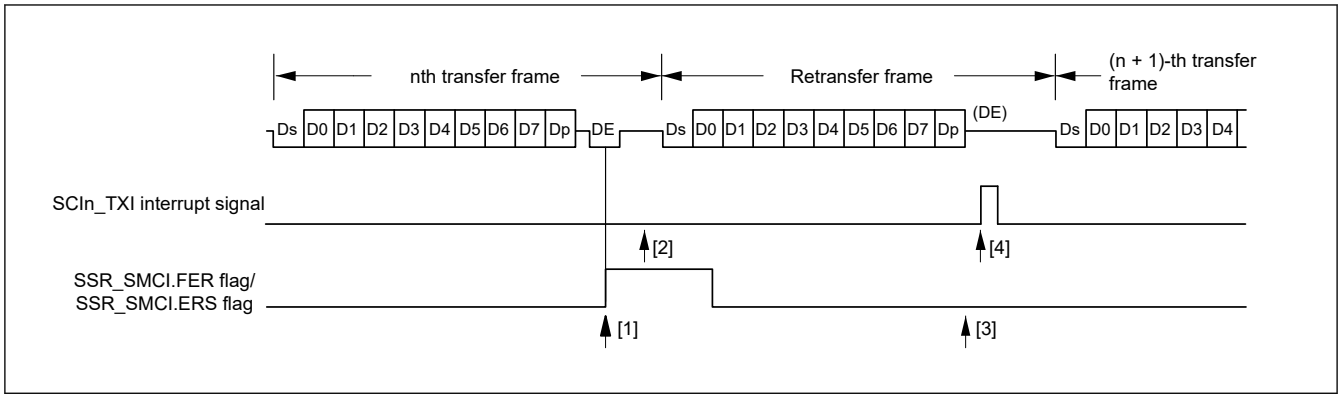

Figure 25.83 Data re-transfer operation in smart card interface transmission mode

The SSR_SMCI.TEND flag is set at different timings depending on the SMR_SMCI.GM bit setting. Figure 25.84 shows the TEND flag generation timing.

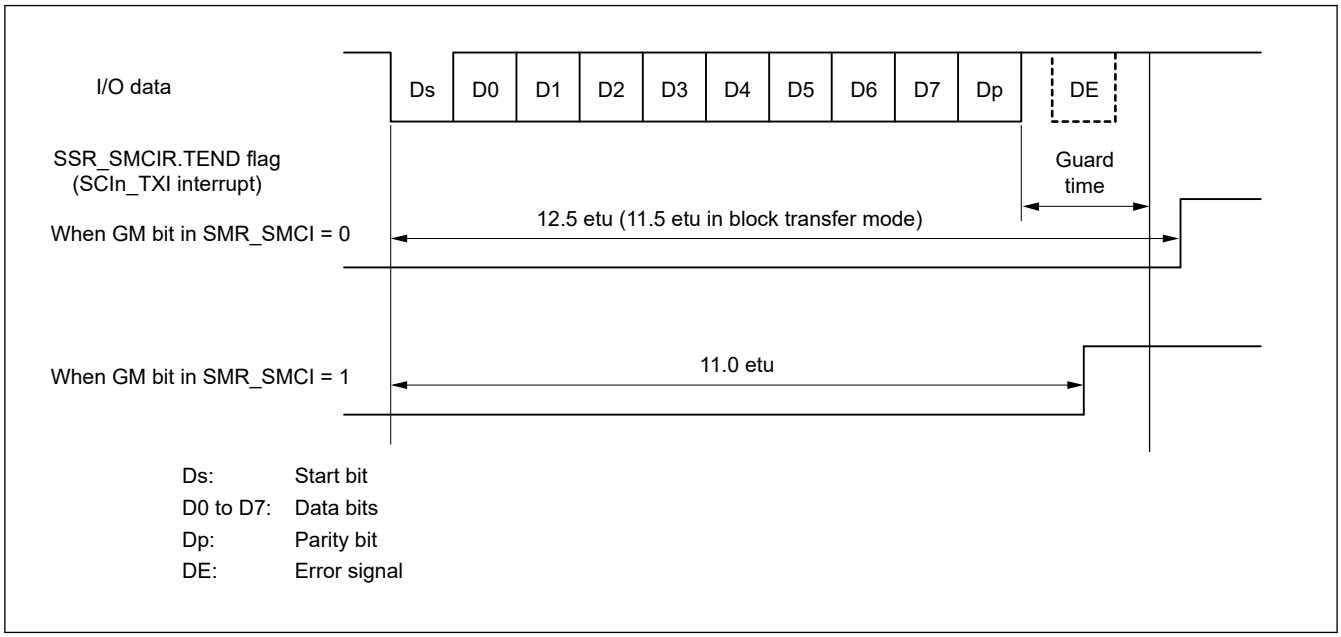

Figure 25.84 SSR.TEND flag generation timing during transmission

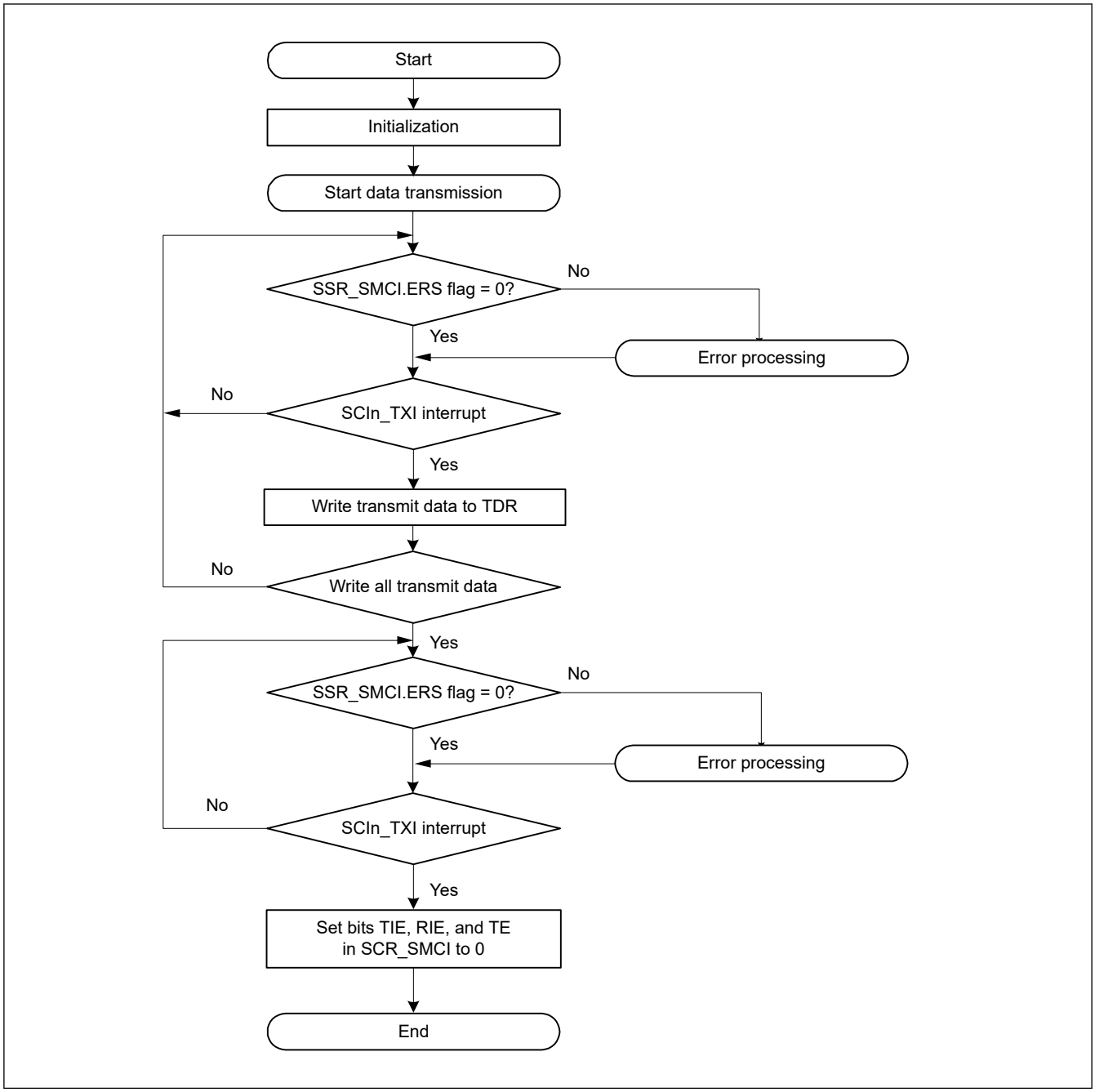

Figure 25.85 Example flow of smart card interface transmission

25.7.7 Serial Data Reception (Except in Block Transfer Mode)

Serial data reception in smart card interface mode is similar to that in non-smart card interface mode. Figure 25.86 shows the data re-transfer operation in reception mode.

1. If a parity error is detected in the receive data, the SSR_SMCI.PER flag is set to 1. When the SCR_SMCI.RIE bit is 1, an SCIn_ERI interrupt request is generated. Clear the PER flag to 0 before the next parity bit is sampled.
2. For a frame in which a parity error is detected, no SCIn_RXI interrupt is generated.
3. When no parity error is detected, the SCR_SMCI.PER flag is not set to 1.
4. In this case, data is determined to be received successfully. When the SCR_SMCI.RIE bit is 1, an SCIn_RXI interrupt request is generated.

Figure 25.87 shows an example flow of serial data reception. All the processing steps are automatically performed using an SCIn_RXI interrupt request to activate the DTC or DMAC.

In reception, setting the RIE bit to 1 allows an SCIn_RXI interrupt request to be generated. The DTC or DMAC is activated by an SCIn_RXI interrupt request if the SCIn_RXI interrupt request is previously specified as a source of DTC or DMAC activation, allowing the transfer of receive data.

If an error occurs during reception and either the ORER or PER flag in SSR_SMCI is set to 1, a receive error interrupt (SCIn_ERI) request is generated. Clear the error flag after the error occurrence. If an error occurs, the DTC or DMAC is not activated and receive data is skipped. Therefore, the number of bytes of receive data specified in the DTC or DMAC is transferred.

If a parity error occurs and the PER flag is set to 1 during reception, the receive data is transferred to RDR, allowing the data to be read.

When a reception is forced to terminate by setting SCR_SMCI.RE to 0 during operation, read the RDR register because the received data that is not yet read might be left in the RDR.

Note: For operations in block transfer mode, see section 25.3.9. Serial Data Reception in Asynchronous Mode.

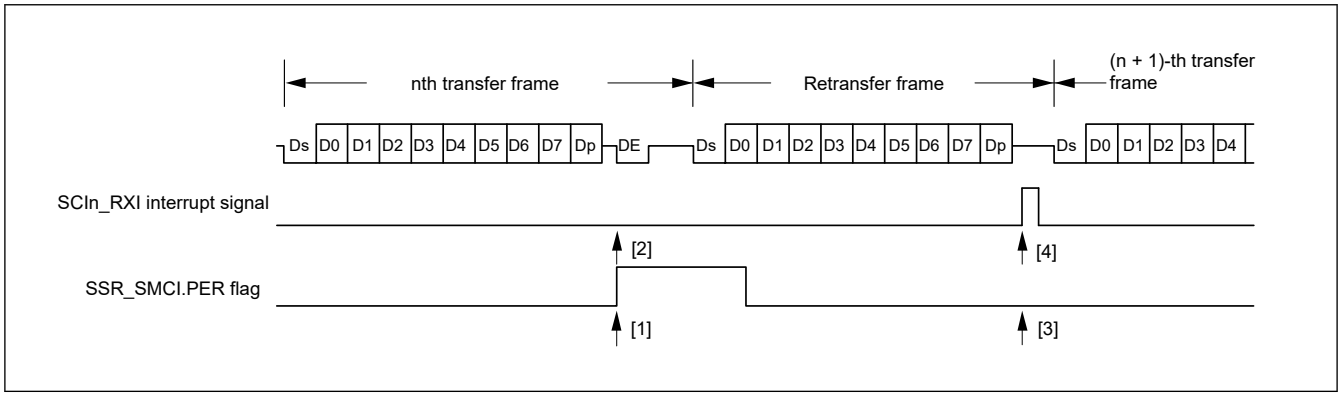

Figure 25.86 Data re-transfer operation in smart card interface reception mode

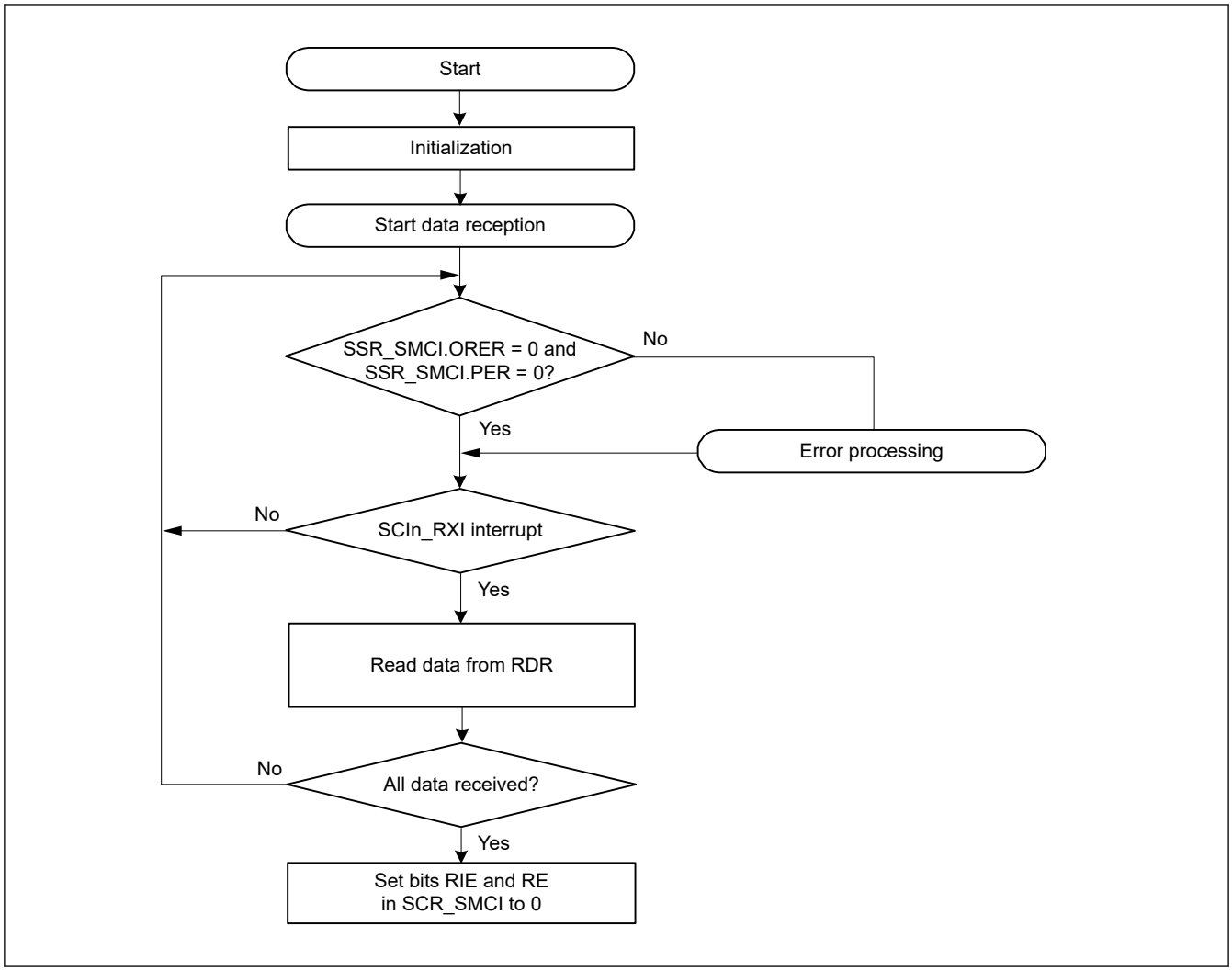

Figure 25.87 Example flow of smart card interface reception

25.7.8 Clock Output Control

When the GM bit in SMR_SMCI is set to 1, the clock output can be controlled by the CKE[1:0] bits in SCR_SMCI. For details on the CKE[1:0] bits, see section 25.2.14. SCR_SMCI : Serial Control Register for Smart Card Interface Mode (SCMR.SMIF = 1). When setting the clock output, the base clock described in section 25.7.4. Receive Data Sampling Timing and Reception Margin is applied.

Figure 25.88 shows an example timing for the clock output control when the CKE[1] bit in SCR_SMCI is set to 0 and the CKE[0] bit in SCR_SMCI is controlled.

When the GM bit in SMR_SMCI is 0, output control by the CKE[0] bit in SCR_SMCI is immediately reflected on the SCKn pin, so there is a possibility that pulses with an unintended width may be output from the SCKn pin.

When the GM bit in SMR_SMCI is 1, the clock with the same pulse width as the base clock is output even if the CKE[0] bit in SCR_SMCI is changed.

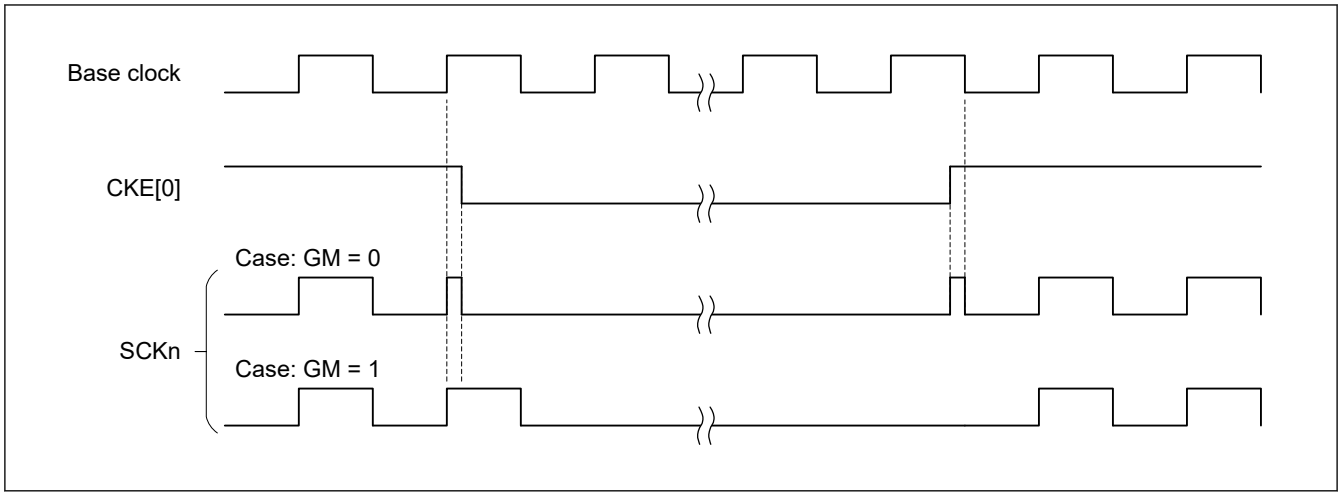

Figure 25.88 Clock Output timing

25.8 Operation in Simple IIC Mode

Simple IIC mode format is composed of 8 data bits and an acknowledge bit. By continuing into a slave-address frame after a start condition or restart condition, a master device can specify a slave device as the partner for communications. The currently specified slave device remains valid until a new slave device is specified or a stop condition is satisfied. The 8 data bits in all frames are transmitted in order from the MSB.

The I^{2}C bus format and timing of the I^{2}C bus are shown in Figure 25.89 and Figure 25.90.

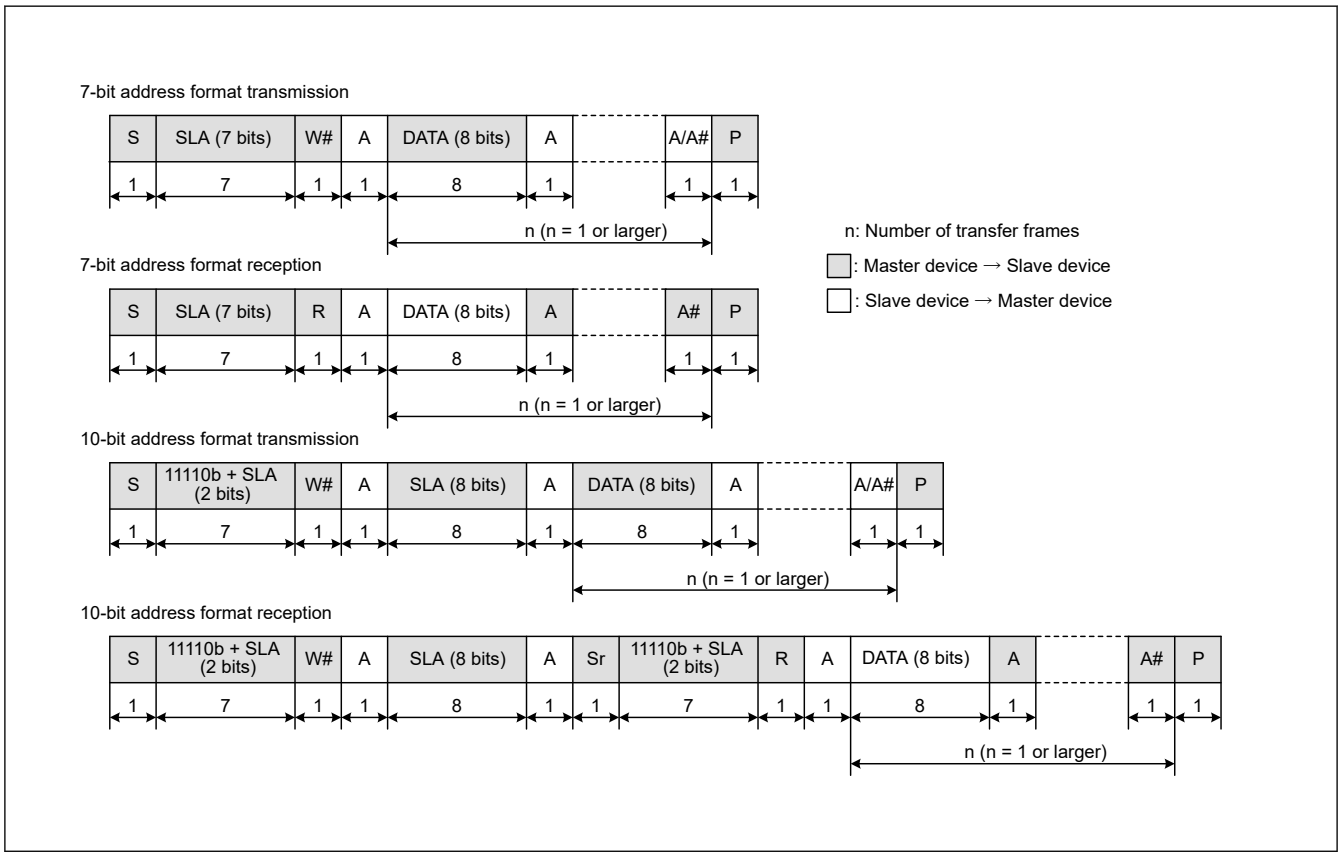

Figure 25.89 I^{2}C bus format

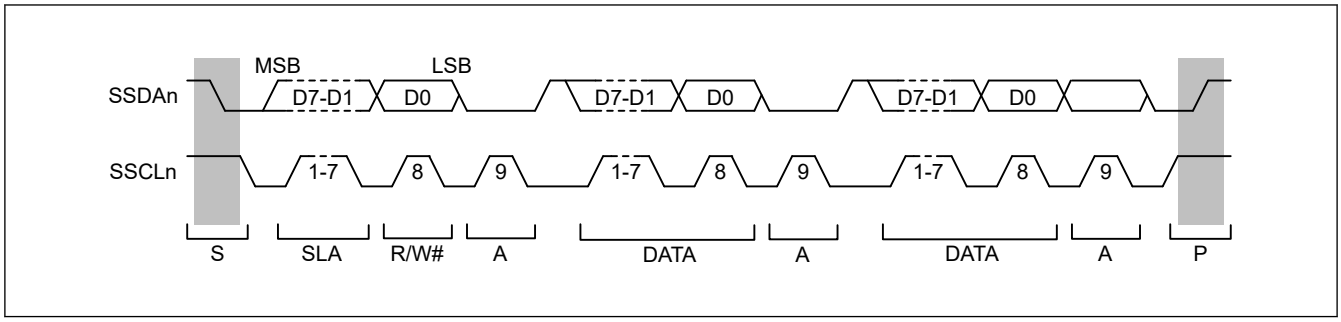

Figure 25.90 **I²C bus timing when SLA is 7 bits**

- S: Indicates a start condition, when the master device changes the level on the SDAn line from high to low while the SCLn line is high
- SLA: Indicates a slave address, by which the master device selects a slave device
- R/W#: Indicates the direction of transfer (reception or transmission). The value 1 indicates transfer from the slave device to the master device and 0 indicates transfer from the master device to the slave device.
- A/A#: Indicates an acknowledge bit. This is returned by the slave device for master transmission and by the master device for master reception. Return low indicates ACK and return high indicates NACK.
- Sr: Indicates a restart condition, when the master device changes the level on the SDAn line from high to low while the SCLn line is high and after the setup time elapses
- DATA: Indicates the data being received or transmitted
- P: Indicates a stop condition, when the master device changes the level on the SDAn line from low to high while the SCLn line is high

25.8.1 Generation of Start, Restart, and Stop Conditions

Writing 1 to the SIMR3.IICSTAREQ bit causes the generation of a start condition. The generation of a start condition proceeds through the following operations:

- The level on the SDAn line falls (from the high level to the low level) and the SCLn line is kept in the released state
- The hold time for the start condition is set as half of a bit period at the bit rate determined by the BRR setting
- The level on the SCLn line falls (from the high level to the low level), the IICSTAREQ bit in SIMR3 is set to 0, and a start-condition generated interrupt is output

Writing 1 to the IICRSTAREQ bit in SIMR3 causes the generation of a restart condition. The generation of a restart condition proceeds through the following operations:

- The SDAn line is released and the SCLn line is kept at the low level
- The period at low level for the SCLn line is set as half of a bit period at the bit rate determined by the BRR setting
- The SCLn line is released (transition from the low to the high level)
- When a high level is detected on the SCLn line, the setup time for the restart condition is set as half of a bit period at the bit rate determined by the BRR setting
- The level on the SDAn line falls (from the high level to the low level)
- The hold time for the restart condition is set as half of a bit period at the bit rate determined by the BRR setting
- The level on the SCLn line falls (from the high level to the low level), the SIMR3.IICRSTAREQ bit is set to 0, and a restart-condition generated interrupt is output

Writing 1 to the SIMR3.IICSTPREQ bit causes the generation of a stop condition. The generation of a stop condition proceeds through the following operations:

- The level on the SDAn line falls (from the high level to the low level) and the SCLn line is kept at the low level
- The period at low level for the SCLn line is set as half of a bit period at the bit rate determined by the BRR setting
- The SCLn line is released (transition from the low to the high level)

- When a high level is detected on the SCLn line, the setup time for the stop condition is set as half of a bit period at the bit rate determined by the BRR setting
- The SDAn line is released (transition from the low to the high level), the SIMR3.IICSTPREQ bit is set to 0, and a stop-condition generated interrupt is output

Figure 25.91 shows the timing of operations in the generation of start, restart, and stop conditions.

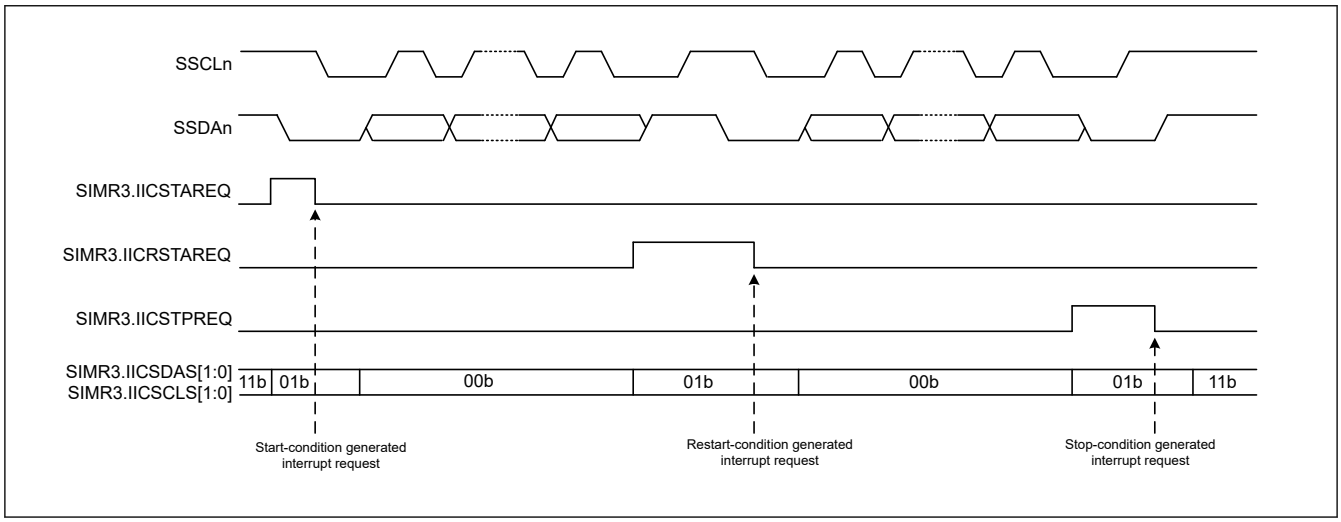

Figure 25.91 Timing of operations in generation of start, restart, and stop conditions

25.8.2 Clock Synchronization

The SCLn line can be driven low if a wait is inserted by a slave device at the other side of the transfer. Setting the SIMR2.IICCSC bit to 1 applies control to obtain synchronization when a difference arises between the levels of the internal SCLn clock signal and the level being input on the SCLn pin.

When the SIMR2.IICCSC bit is set to 1, the level of the internal SCLn clock signal changes from low to high. Counting to determine the period at a high level stops while the low level is being input on the SCLn pin. Counting to determine the period at a high level starts after the transition of the input on the SCLn pin to the high level.

The interval from this time until counting to determine the period at high level starts on the transition of the SCLn pin to the high level, is the total of the delay of SCLn output, delay for noise filtering of the input on the SCLn pin (2 or 3 cycles of sampling clock for the noise filter), and delay for internal processing (1 or 2 cycles of PCLK). The period at high level of the internal SCLn clock is extended even when other devices do not place the low level on the SCLn line.

If the SIMR2.IICCSC bit is 1, synchronization is obtained for the transmission and reception of data by taking the logical AND of the input on the SCLn pin and the internal SCLn clock. If the SIMR2.IICCSC bit is 0, synchronization with the internal SCLn clock is obtained for the transmission and reception of data.

If a slave device inserts a wait period into the interval until the transition of the internal SCLn clock signal from the low to the high level after a request for the generation of a start, restart, or stop condition is issued, the time until generation is prolonged by that period.

If a slave device inserts a wait period after the transition of the internal SCLn clock signal from the low to the high level, although the generation-completed interrupt is issued without stopping the waiting period, generation of the condition itself is not guaranteed.

Figure 25.92 shows an example operation for synchronizing the clocks.

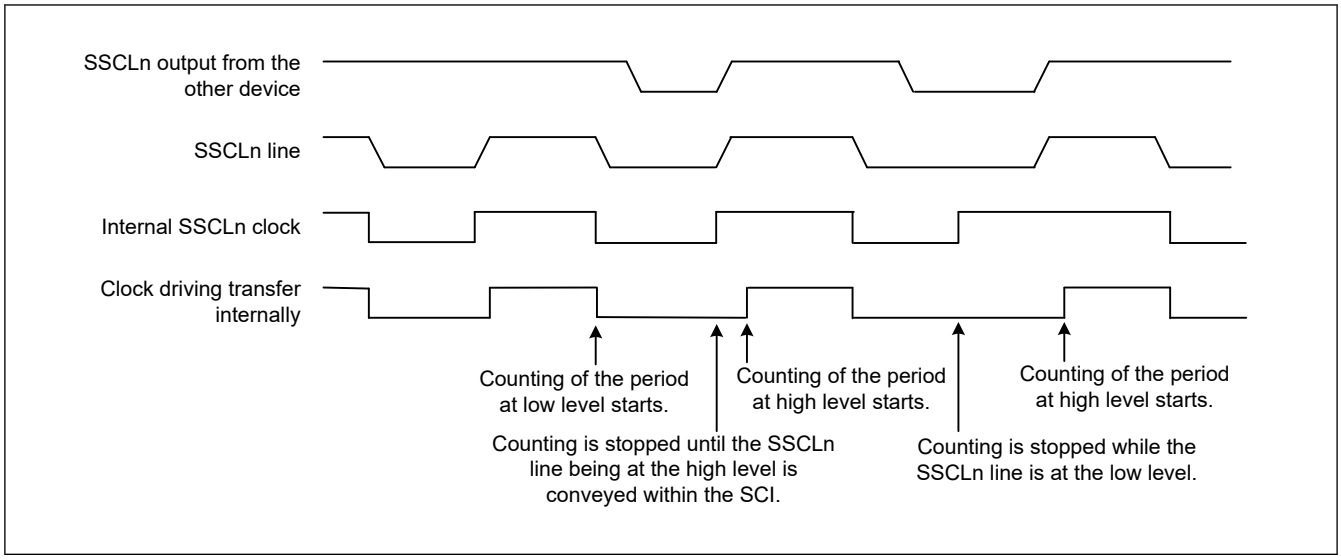

Figure 25.92 Example operations for clock synchronization

25.8.3 SDAn Output Delay

The SIMR1.IICDL[4:0] bits can be used to set a delay for output on the SDAn pin relative to falling edges of output on the SCLn pin. Delay settings from 0 to 31 are selectable, representing periods of the corresponding numbers of cycles of the clock signal from the on-chip baud rate generator (derived by frequency-dividing the base clock, PCLK, by the divisor selected in the SMR.CKS[1:0] bits). A delay for output on the SDAn pin applies to the start condition/restart condition/stop condition signal, 8-bit transmit data, and acknowledge bit.

If the SDAn output delay is shorter than the time for the level on the SCLn pin to fall, the change of the output on the SDAn pin starts while the output level on the SCLn pin is falling, creating a possibility of erroneous operation for slave devices. Ensure that settings for the delay of output on the SDAn pin specify times greater than the time output on the SCLn pin takes to fall (300 ns for IIC in normal mode and fast mode).

Figure 25.93 shows the timing of delays in SDAn output.

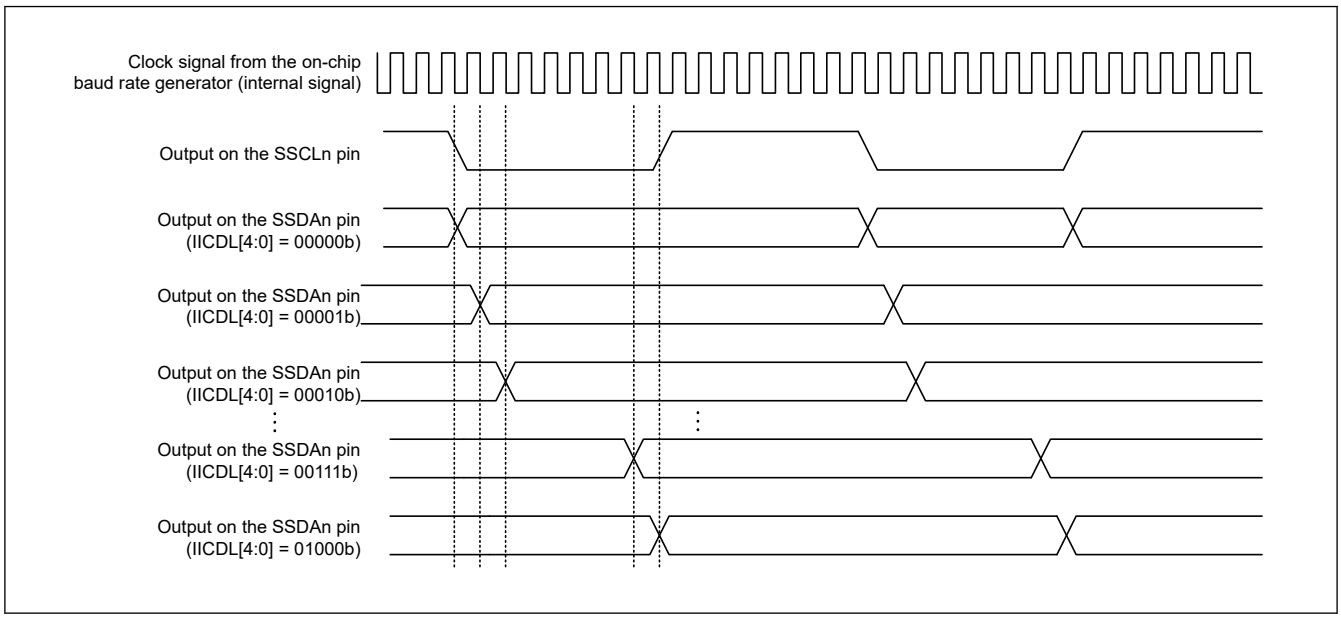

Figure 25.93 Timing of delays in SDAn output

25.8.4 SCI Initialization in Simple IIC Mode

Before transferring data, write the initial value 0x00 to SCR and initialize the interface following the example shown in Table 25.40.

Before making any changes to the operating mode or transfer format, be sure to set SCR to its initial value. In simple IIC mode, the open-drain setting for the communication ports should be made on the port side.

Table 25.40 Example flow of SCI initialization in simple IIC mode

No.	Step Name	Description
1	Start of initialization	
2	Set the TIE, RIE, TE, RE, TEIE and CKE[1:0] bits in SCR to 0	
3	Set the I/O port functions	Set the I/O port to allow use (on N-channel open-drain output pins) of the SSCLn and SSDAn pin functions.
4	Set the IICSDAS[1:0] and IICSCLS[1:0] bits in SIMR3 to 11b	Place the SSCLn and SSDAn pins in the high-impedance state until a start condition is to be generated.
5	Set up the transfer or reception format in SMR and SCMR	Set the format for transmission and reception in SMR and SCMR. In SMR, set the CKS[1:0] bits to the target value and set the other bits to 0. In SCMR, set the SDIR bit to 1 and the SINV and SMIF bits to 0.
6	Set the initial value to SPTR.	Set the Initial value to SPTR.
7	Set the value in BRR	Write the value for the targeted bit rate to BRR.
8	Set a value in MDDR	Write the value obtained by correcting a bit rate error in MDDR. This step is not required if the BRME bit in SEMR is set to 0.
9	Set the values in SEMR, SNFR, SIMR1, SIMR2, and SPMR	Set the values in SEMR, SNFR, SIMR1, SIMR2, and SPMR. Set the NFEN and BRME bits in SEMR. In SNFR, set the NFCS[2:0] bits. In SIMR1, set the IICM bit to 1 and the IICDL[4:0] bits as required. In SIMR2, set the IICACKT and IICCSC bits to 1 and the IICINTM bits as required. In SPMR, set all the bits to 0.
10	Set the SCR.RE and TE bit to 1 and set the SCR.TIE, RIE and TEIE bits	Set the RE and TE bits in the SCR to 1. Then, set the SCR.TIE, RIE, and TEIE bits (for transmission and when the SIMR2.IICINTM bit is 1, set the RIE bit to 0). Setting the TE and RE bits to 1 enables the SSCLn and SSDAn pin functions.
11	Start of transmission or reception	

25.8.5 Operation in Master Transmission in Simple IIC Mode

Figure 25.94 and Figure 25.95 show examples of master transmission and Figure 25.96 shows an example flow of data transmission.

Figure 25.94 shows the operation example when SIMR2.IICINTM bit is 1 (use reception and transmission interrupts) and the value of the SCR.RIE bit is assumed to be 0 (SCIn_RXI and SCIn_ERI interrupt requests are disabled).

See Table 25.45 for more information on the STI interrupt.

Figure 25.96 shows a flow chart in the case of SIMR2.IICINTM is 1 and address transmission by CPU and data transmission by DTC or DMAC. When 10-bit slave addresses are in use, steps [3] and [4] are repeated twice.

In simple IIC mode, the transmit data empty interrupt (SCIn_TXI) is generated when communication of one frame is complete, unlike the SCIn_TXI interrupt request generation timing during clock synchronous transmission.

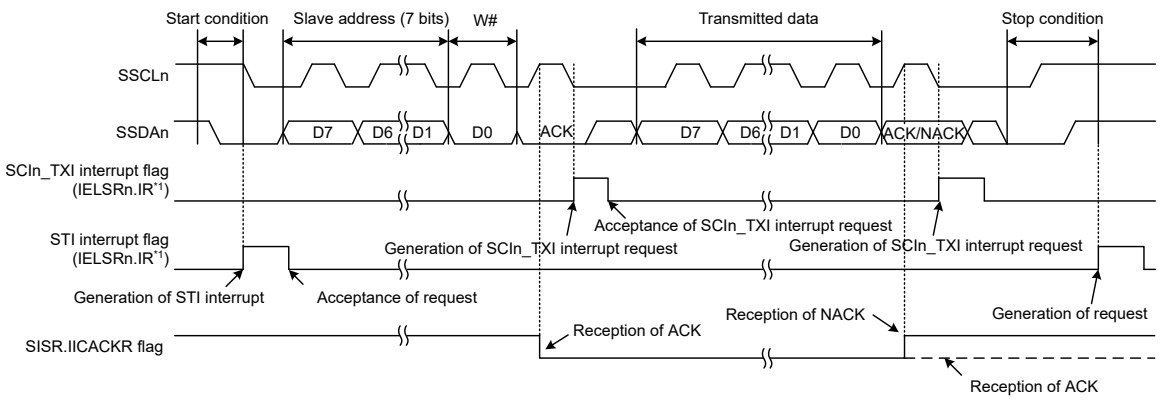

Note 1. See section 12, Interrupt Controller Unit (ICU) for information on the corresponding interrupt event number.

Figure 25.94 Example 1 of operations for master transmission in simple IIC mode with 7-bit slave addresses, transmission interrupts, and reception interrupts

When the SIMR2.IICINTM bit is set to 0 (use ACK/NACK interrupts) during master transmission, the DTC or DMAC is activated by the ACK interrupt as the trigger and required number of data bytes are transmitted. When the NACK is received, error processing such as transmission stop and retransmission is performed using the NACK interrupt as the trigger.

To restart communication for some reason after writing data in the TDR register, use the following procedure:

1. Set the TE and RE bits in the SCR register to 0 to stop communication.
2. Set 0xF0 in the SIMR3 register, release the I^2C bus, and clear the generation of a condition.
3. If the RDRF flag in the SSR register is set to 1, clear it.
4. Set the TE and RE bits in the SCR register to 1 and start the next communication.

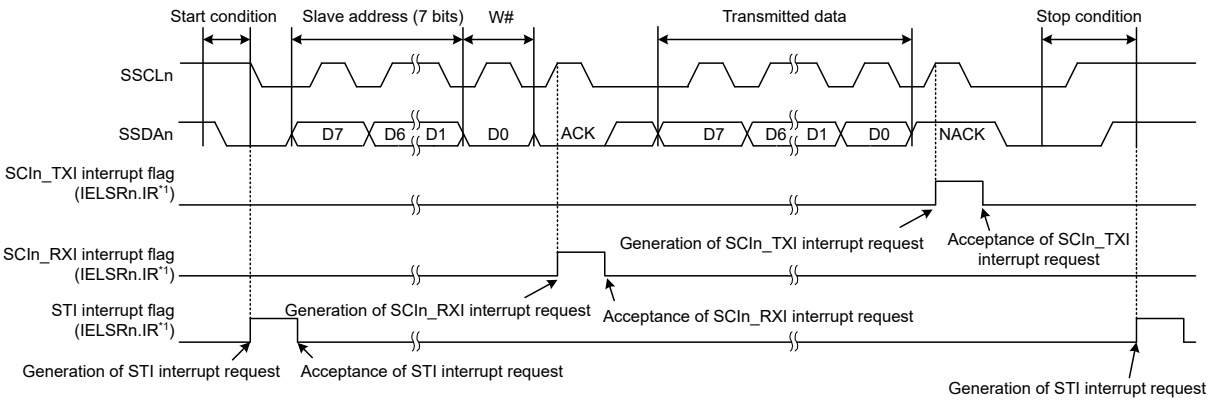

Note 1. See section 12, Interrupt Controller Unit (ICU) for information on the corresponding interrupt event number.

Figure 25.95 Example 2 of operations for master transmission in simple IIC mode with 7-bit slave addresses, ACK interrupts, and NACK interrupts

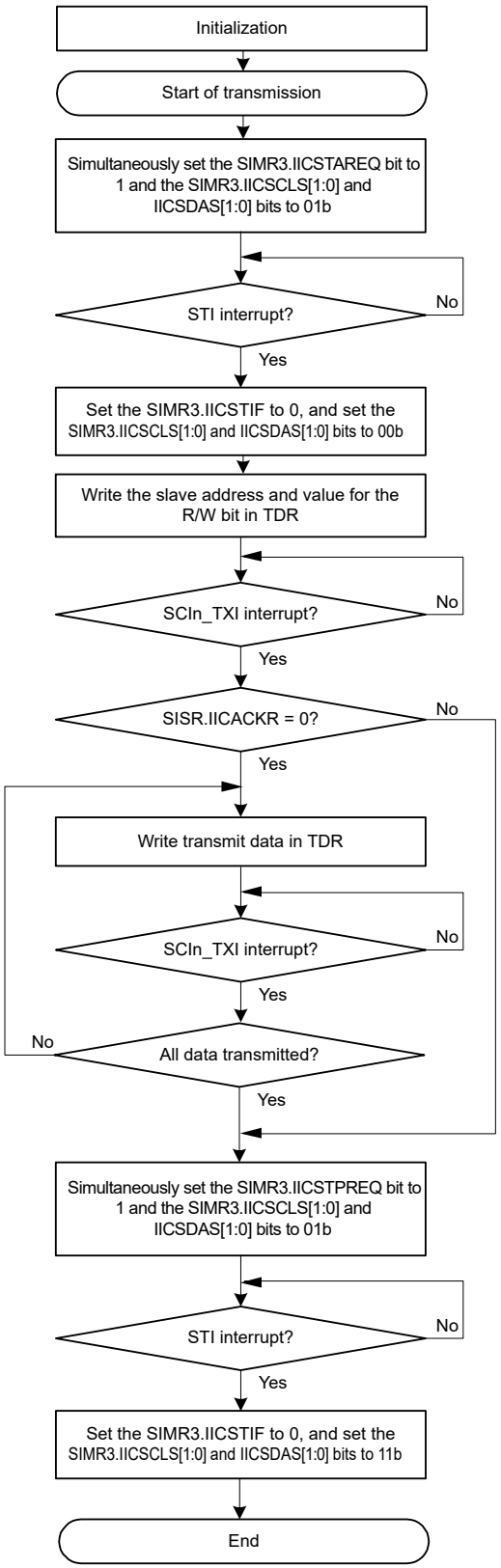

[1] [1] Initialization in simple IIC mode:
For transmission, set the SCR.RIE to 0 to disable the SCIn_RXI and ERI interrupts.

[2] [2] Generate a start condition.

[3] [3] Writing to TDR:
Write the slave address and value for the R/W bit to TDR.

[4] [4] Confirming ACK response from the slave device:
Check the SISR.IICACKR bit. If SISR.IICACKR is 0, it indicates that the slave device responded with ACK and operations proceed. If SISR.IICACKR is 1, it indicates that there was no response from the slave device so the next transition is to generate a stop condition.

If 10-bit slave addresses are in use, processing of [3] and [4] is repeated twice.

[5] [5] Continuing with serial transmission:
When transmission is to continue, write additional transmit data to TDR. Except for the first data to be transmitted, a SCIn_TXI interrupt request can activate the DMAC or DTC to handle writing of data to TDR. But it cannot be confirmed status of ACK or NACK.

[6] [6] Generate a stop condition.

Note: In simple IIC mode, the SCIn_TXI interrupt is generated when communication completes.

Figure 25.96 Example flow of master transmission in simple IIC mode with transmission interrupts and reception interrupts

25.8.6 Master Reception in Simple IIC Mode

Figure 25.97 shows an example operation in simple IIC mode master reception and Figure 25.98 shows an example flow of master reception.

The value of the SIMR2.IICINTM bit is assumed to be 1 (use reception and transmission interrupts).

In simple IIC mode, the transmit data empty interrupt (SCIn_TXI) is generated when communication of one frame is complete, unlike the SCIn_TXI interrupt request generation timing during clock synchronous transmission.

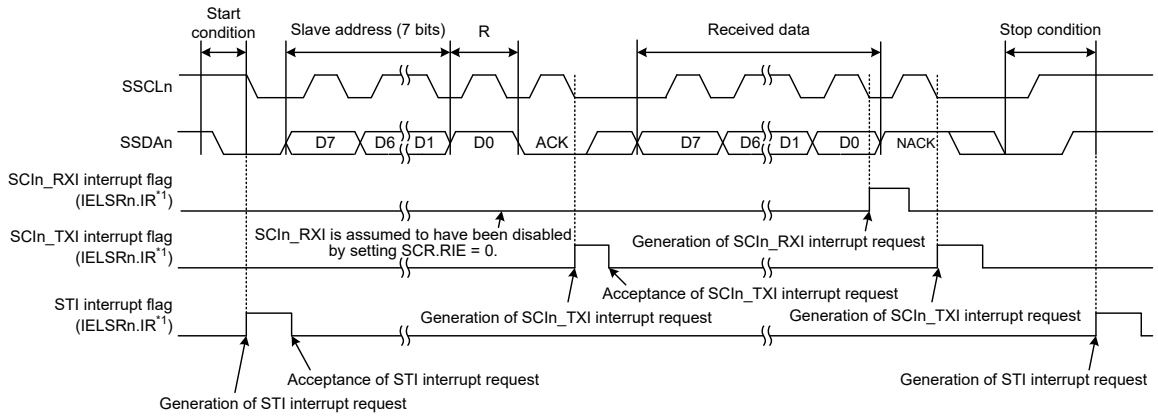

Note 1. See section 12, Interrupt Controller Unit (ICU) for information on the corresponding interrupt event number.

Figure 25.97 Example operations for master reception in simple IIC mode with 7-bit slave addresses, transmission interrupts, and reception interrupts

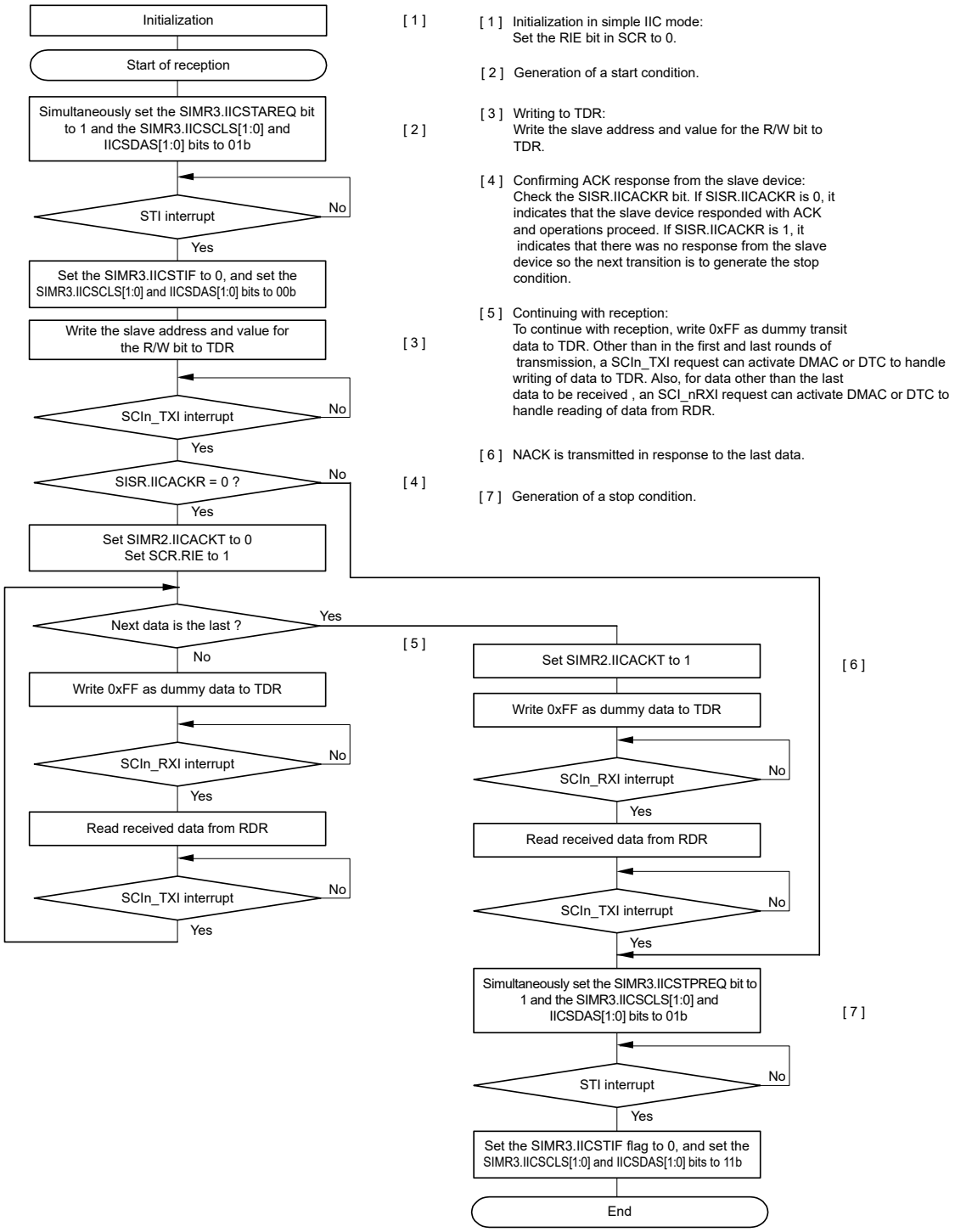

Note: In simple IIC mode, the SCIn_TXI interrupt request is generated when communication is complete.

Figure 25.98 Example flow of master reception in simple IIC mode with transmission interrupts and reception interrupts

25.9 Operation in Simple SPI Mode

As an extended function, the SCI supports a simple SPI mode that handles transfer among one or multiple master devices and multiple slave devices.

Using the settings for clock synchronous mode (SCMR.SMIF = 0, SIMR1.IICM = 0, SMR.CM = 1) and setting the SPMR.SSE bit to 1 place the SCI in simple SPI mode. However, the SSn pin function on the master side is not required for connection of the device used as the master in simple SPI mode when the configuration only has a single master. Therefore, set the SPMR.SSE bit to 0 in such cases.

Figure 25.99 shows an example of connections for simple SPI mode. Control a general port pin to produce the SSn output signal from the master.

In simple SPI mode, data is transferred in synchronization with clock pulses in the same way as in clock synchronous mode. One character of data for transfer consists of 8 bits of data, and parity bits cannot be appended. The data can be inverted by setting the SCMR.SINV bit to 1.

Because the receiver and transmitter are independent of each other within the SCI module, full-duplex communications are possible, with a shared clock signal. Additionally, because both the transmitter and receiver have a buffered structure, writing the next transmit data while transmission is in progress and reading previously received data while reception is in progress are both possible. This enables continuous transfer.

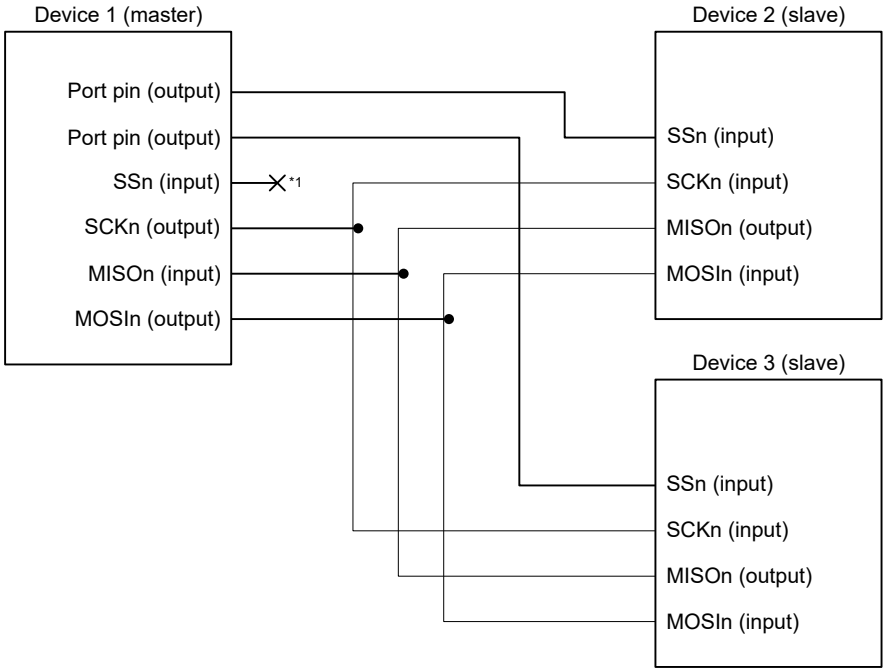

Note 1. The SSn pin input is not required in a single-master system (the interface is used with the setting SPMR.SSE = 0).

Figure 25.99 Example connections using simple SPI mode in single master mode with SPMR.SSE bit = 0

25.9.1 States of Pins in Master and Slave Modes

The direction (input or output) of pins for the simple SPI mode interface differs according to whether the device is a master (SCR.CKE[1:0] = 00b or 01b and SPMR.MSS = 0) or slave (SCR.CKE[1:0] = 10b or 11b and SPMR.MSS = 1).

Table 25.41 lists the relationship between the pin states, mode, and level on the SSn pin.

Table 25.41 States of pins by mode and input level on SSn pin (1 of 2)

Mode	Input on SSn pin	State of MOSIn pin	State of MISOn pin	State of SCKn pin
Master mode*1	High level (transfer can proceed)	Output for data transmission*2	Input for received data	Clock output*3
	Low level (transfer cannot proceed)	High-impedance	Input for received data (but disabled)	High-impedance

Table 25.41 States of pins by mode and input level on SSn pin (2 of 2)

Mode	Input on SSn pin	State of MOSIn pin	State of MISOn pin	State of SCKn pin
Slave mode	High level (transfer cannot proceed)	Input for received data (but disabled)	High-impedance	Clock input (but disabled)
	Low level (transfer can proceed)	Input for received data	Output for data transmission	Clock input

Note 1. When there is only a single master (SPMR.SSE = 0), transfer is possible regardless of the input level on the SSn pin. This is equivalent to input of a high level on the SSn pin.
Note 2. The MOSIn pin output is in the high-impedance state when serial transmission is disabled (SCR.TE bit = 0).
Note 3. The SCKn pin output is in the high-impedance state when serial transmission is disabled (SCR.TE = 0 and SCR.RE = 0) in a multi-master configuration (SPMR.SSE = 1).

25.9.2 SS Function in Master Mode

Setting the CKE[1:0] bits in the SCR to 00b or 01b and the MSS bit in the SPMR to 0 selects master mode operation. The SSn pin is not used in single-master configurations (SPMR.SSE = 0), so transmission or reception can proceed regardless of the value of the SSn pin.

When the level on the SSn pin is high in a multi-master configuration (SPMR.SSE = 1), a master device outputs clock signals from the SCKn pin before starting transmission or reception to indicate that there are no other masters or another master is performing reception or transmission.

When the level on the SSn pin is low in a multi-master configuration (SPMR.SSE = 1), there are other masters, and a transmission or reception is in progress. The MOSIn output and SCKn pins are placed in the high-impedance state and starting transmission or reception is not possible. In addition, the value of the SPMR.MFF bit is 1, indicating a mode fault error. In a multi-master configuration, start error processing by reading SPMR.MFF flag. If a mode fault error occurs while transmission or reception is in progress, transmission or reception does not stop, but the MOSIn and SCKn outputs are in the high-impedance state after completion of the transfer.

Use a general port pin to produce the SS output signal from the master.

25.9.3 SS Function in Slave Mode

Setting the SCR.CKE[1:0] bits to 10b or 11b and the SPMR.MSS bit to 1 selects slave operation. When the SSn pin is high, the MISOn output pin is in the high-impedance state and clock input through the SCKn pin is ignored. When the SSn pin is low, clock input through the SCKn pin is valid and transmission or reception can proceed.

If the input on the SSn pin changes from low to high during transmission or reception, the MISOn output pin is placed in the high-impedance state. Meanwhile, the internal processing for transmission or reception continues at the rate of the clock input through the SCKn pin until processing for the character being transmitted or received is complete, after which it stops, and the appropriate interrupt (SCIn_TXI, SCIn_RXI, or SCIn_TEI) is generated.

25.9.4 Relationship between Clock and Transmit/Receive Data

The CKPOL and CKPH bits in the SPMR register can be used to set up the clock for use in transmission and reception in four different ways. The relation between the clock signal and the transmission and reception of data is shown in Figure 25.100. The relation is the same for both master and slave operation. This is the same as when the level on the SSn pin is high.

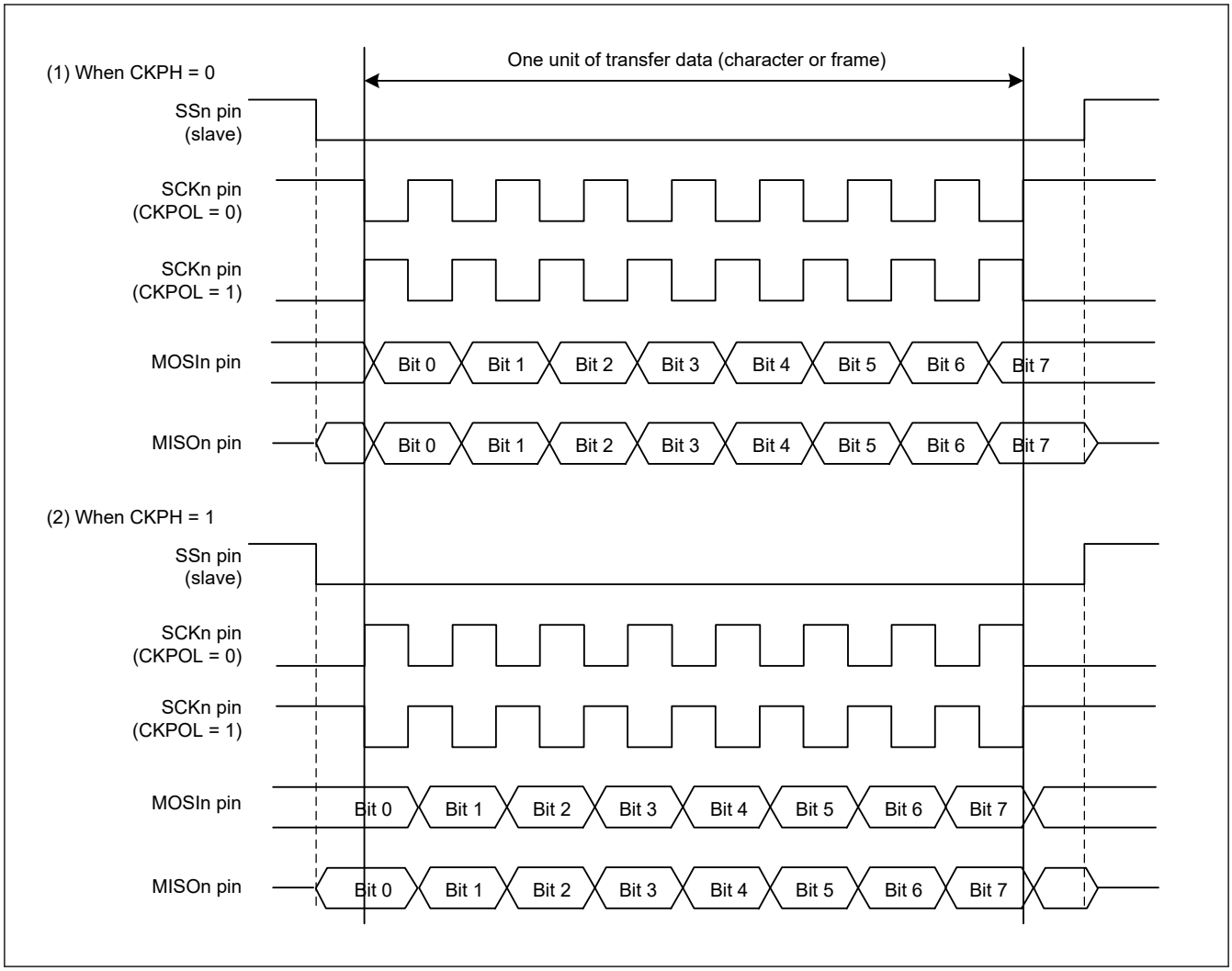

Figure 25.100 Relation between clock signal and transmit or receive data in simple SPI mode

25.9.5 SCI Initialization in Simple SPI Mode

Initialization in simple SPI mode is the same as in clock synchronous mode. See section 25.6.3. SCI Initialization in Clock Synchronous Mode for an example initialization flow. The CKPOL and CKPH bits in the SPMR register must be set to ensure that the clock signal is suitable for both master and slave devices.

Always initialize the SCR register before making any changes to the operating mode or transfer format.

Note: Only the RE bit is set to 0. The SSR.ORER, FER, PER, and RDR flags are not initialized.

Changing the value of the TE bit from 1 to 0 or from 0 to 1 when the TIE bit in the SCR register is 1 at the same time, leads to the generation of a transmit data empty interrupt (SCIn_TXI).

25.9.6 Transmission and Reception of Serial Data in Simple SPI Mode

In master operation, ensure that the SSn pin of the slave device on the other side of the transfer is at the low level before starting the transfer and at the high level on completion of the transfer. Otherwise, the procedures are the same as in clock synchronous mode.

25.10 Bit Rate Modulation Function

Using the bit rate modulation function, the bit rate can be evenly corrected using the number specified in the MDDR register among 256 clock cycles of internal clocks which is selected by the CKS[1:0] bits in SMR/SMR_SMCI.

Figure 25.101 shows an example where the PCLK is selected in the CKS[1:0] bits in SMR/SMR_SMCI, the BRR bit is set to 0, and the MDDR is set to 160 in asynchronous mode. In this example, the cycle of the base clock is evenly corrected (256/160) and the bit rate is also corrected (160/256).

Note: Enabling an internal clock causes bias, and expansion and contraction are generated in the pulse width of the internal base clock.

Do not use this function in clock synchronous mode and in the highest speed settings in simple SPI mode (SMR.CKS[1:0] = 00b, SCR.CKE[1] = 0, and BRR = 0).

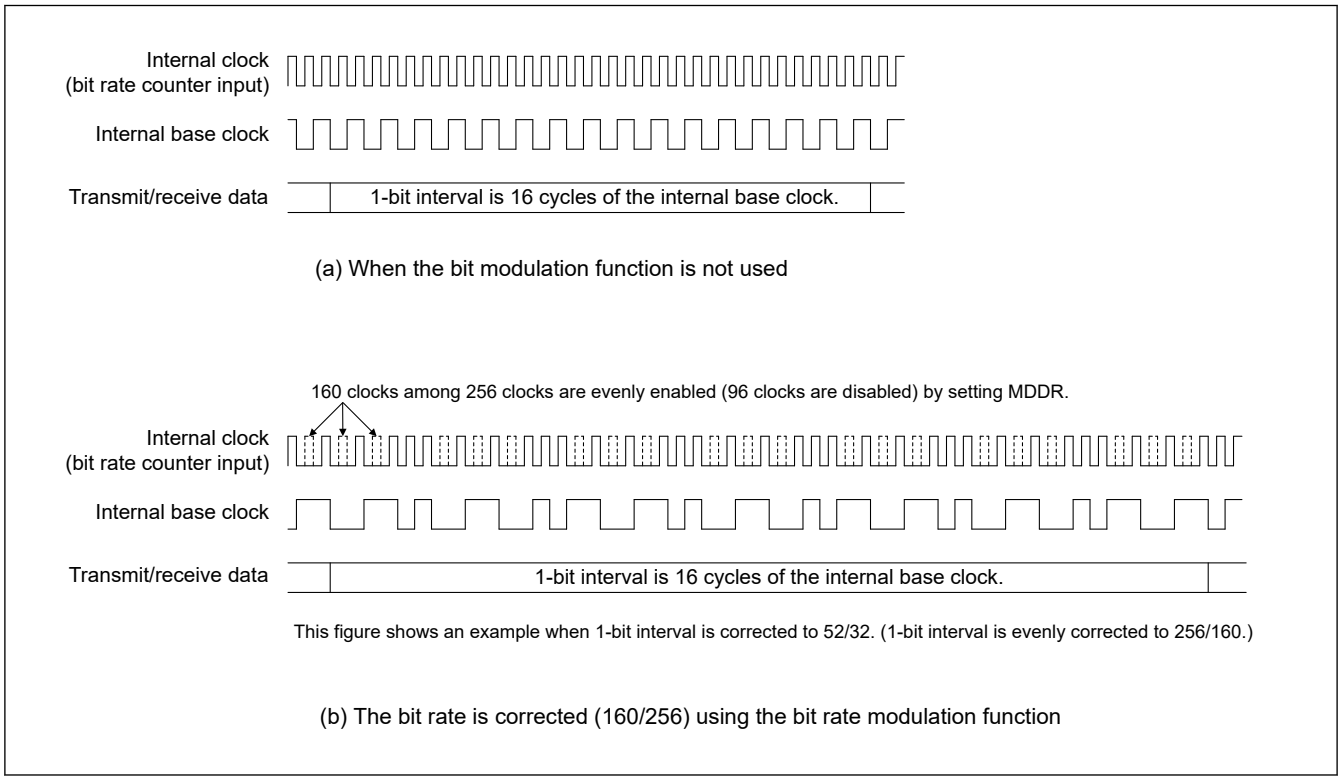

Figure 25.101 Example internal base clock when bit rate modulation function is used

25.11 Operation in Simple LIN Mode

25.11.1 Serial Transfer Protocol

The SCI supports the serial communication protocol consisting of a Start Frame and an Information Frame as Simple LIN. For details, see Figure 25.102.

A Start Frame is composed of a Break Field, Control Field 0, and Control Field 1. An Information Frame is composed of a number of Data Fields, a CRC16 Upper Field, and a CRC16 Lower Field.

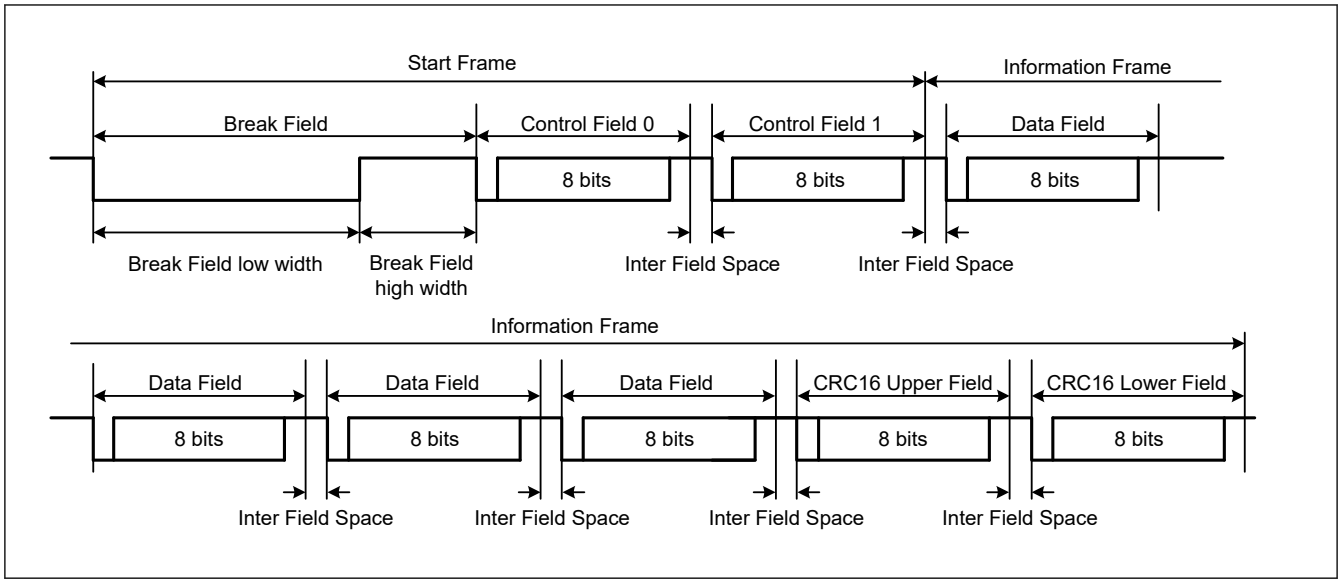

Figure 25.102 Protocol for Serial Transfer by the Simple LIN Mode Control Section

25.11.2 Transmitting a Start Frame

Figure 25.103 shows an example of operations to transmit a Start Frame, which is composed of the Break Field low width, Control Field 0, and Control Field 1. Figure 25.104 and Figure 25.105 are flowcharts for the transmission of a Start Frame.

Operations when the Simple LIN mode control section is to be used to transmit a Start Frame are as listed below. Be sure to use the SCIn (n = 1) in asynchronous mode.

1. With Break Field low width output mode as the operating mode for the timer, writing 1 to the TCR.TCST bit starts counting by the timer, and the low level is output from the TXDXn (n = 1) pin over the period corresponding to registers TCNT and TPRE settings.
2. The output on the TXDXn pin is inverted when the timer counter underflows, and the STR.BFDF flag is set to 1. An SCIX0 interrupt is also generated if the value of the ICR.BFDIE bit is 1.
3. Write 0 to the TCR.TCST bit to stop counting by the timer, and send the data for Control Field 0 by using SCIn. After the Break Field low width output, stop counting before the next underflow occurs.
4. When the data for Control Field 0 have been transmitted, send the data for Control Field 1.
5. When the data for Control Field 1 have been transmitted, send an Information Frame.

Omit the Break Field and Control Field 0 to suit the structure of the Start Frame.

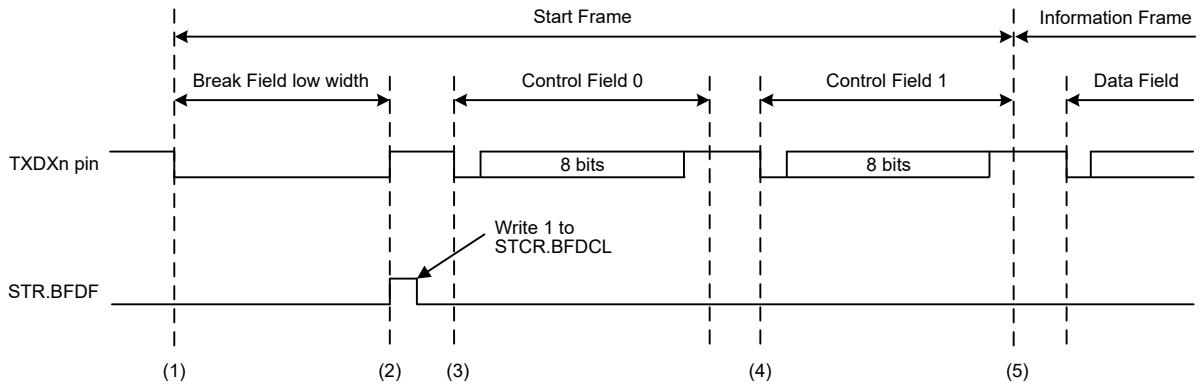

The above diagram assumes the following:

ESMER: ESME = 1

PCR: TXDXPS = 0

ICR: BFDIE = 1

TMR: TOMS[1:0] = 10b

Note: n = 1

Figure 25.103 Example of operations when transmitting a Start Frame

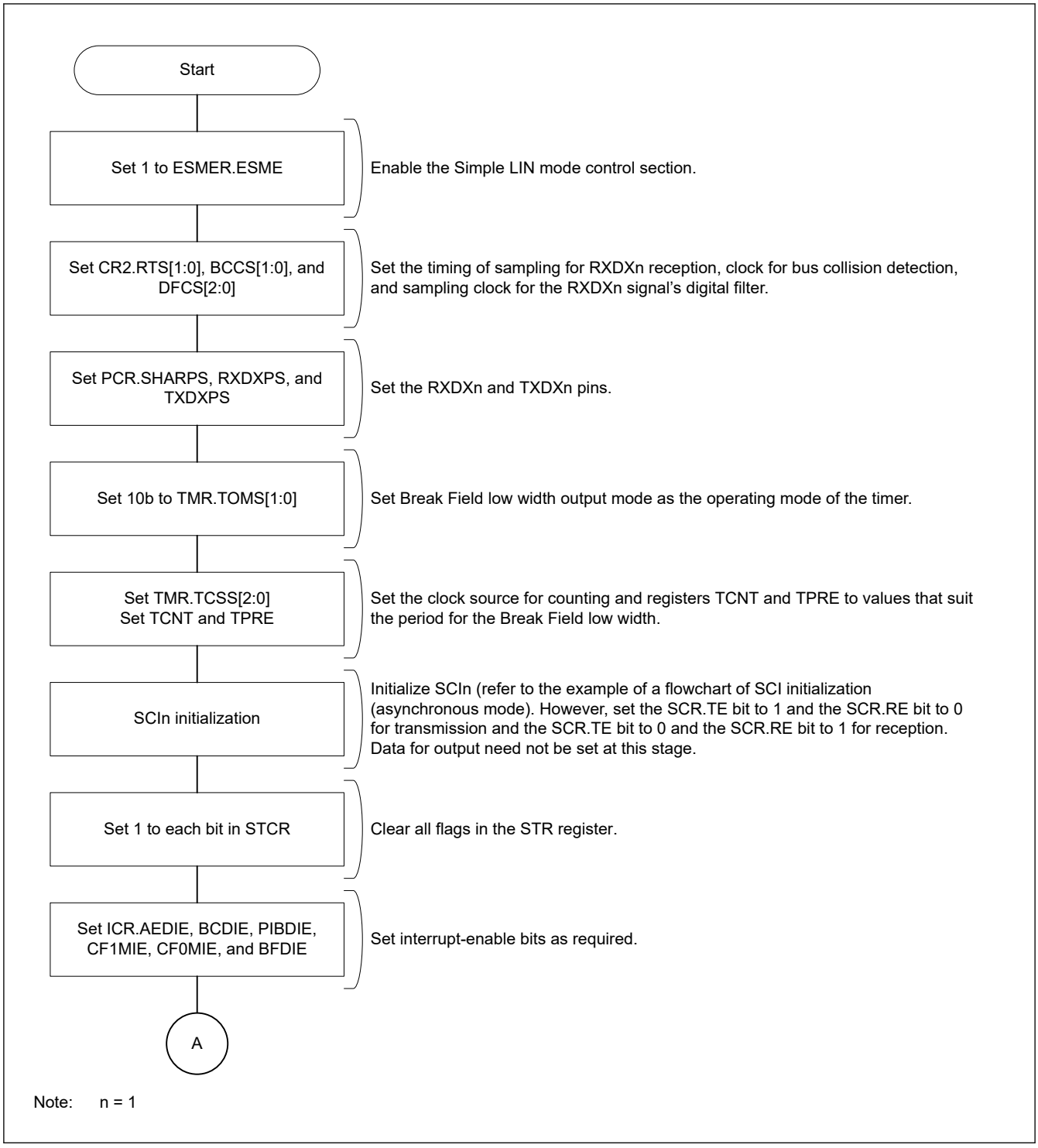

Figure 25.104 Example of Start Frame transmission (1/2)

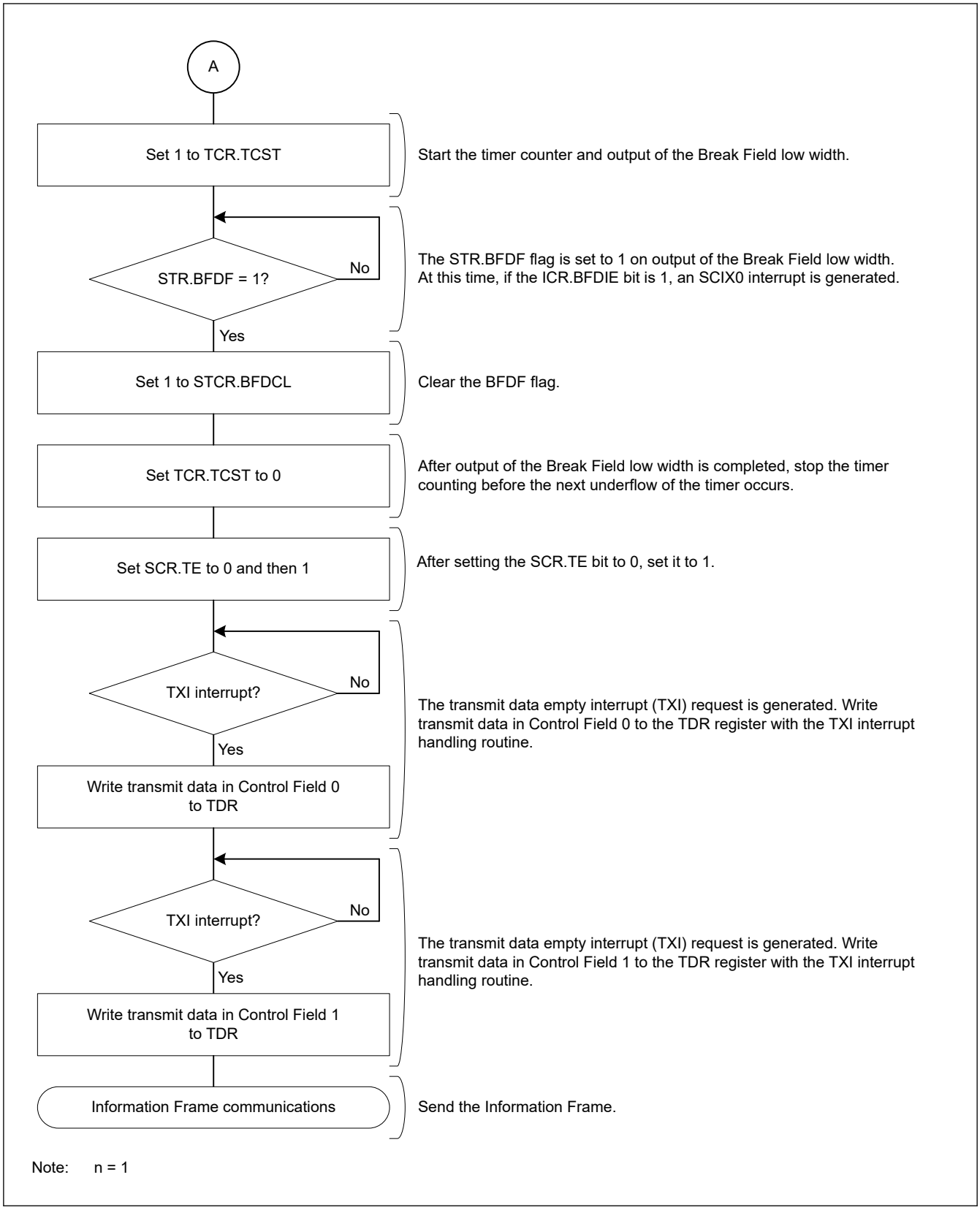

Figure 25.105 Example of Start Frame transmission (2/2)

25.11.3 Receiving a Start Frame

The Simple LIN mode control section is capable of receiving Start Frames with the structures listed in Figure 25.106.

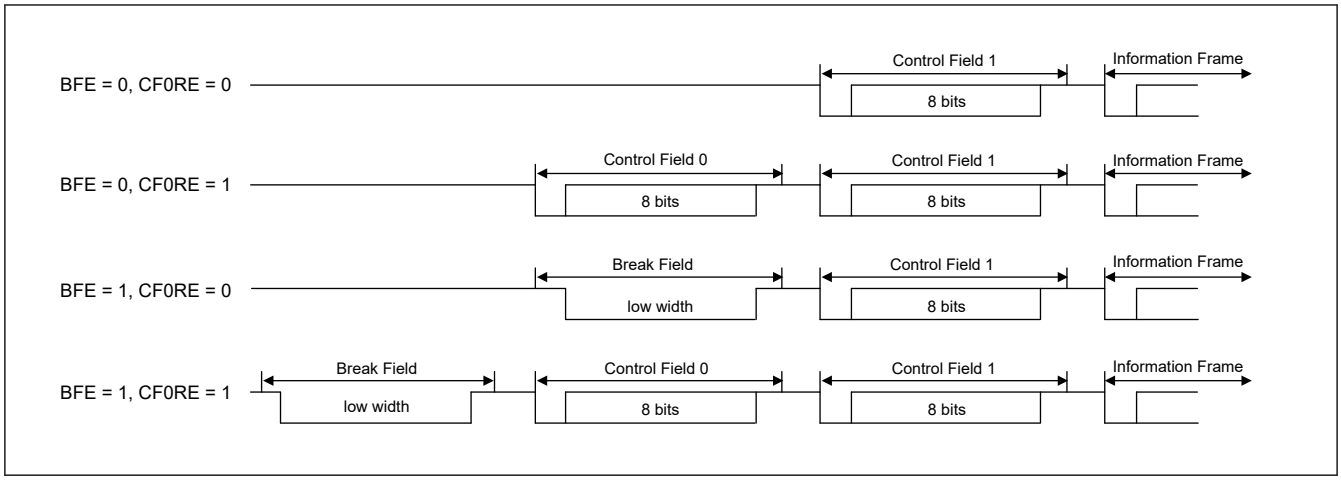

Figure 25.106 Structures of Start Frames

Figure 25.107 shows an example of operations to receive a Start Frame, which is composed of the Break Field low width, Control Field 0, and Control Field 1. Figure 25.108 and Figure 25.109 are flowcharts for the reception of a Start Frame, and Figure 25.110 is a state transition diagram for the Simple LIN mode control section.

Operations when the Simple LIN mode control section is to be used to receive a Start Frame are as listed below. Be sure to use the SCIn (n = 1) in asynchronous mode.

1. With Break Field low width detection mode as the operating mode for the timer, writing 1 to the CR3.SDST bit enables detection of the Break Field low width. RXDXn input to the SCIn is disabled at this time.
2. Low-level input on the RXDXn pin continuing over a period longer than that corresponding to the settings of registers TCNT and TPRE is detected as the Break Field low width. At this time, the STR.BFDF flag is set to 1. An SCIX0 interrupt is also generated if the value of the ICR.BFDIE bit is 1.
3. When the input from the RXDXn pin goes high after the Break Field low width, the CR0.RXDSF flag becomes 0 and reception of Control Field 0 by the SCIn starts.
4. If the data received in Control Field 0 match the data set in the CF0DR register, the STR.CF0MF flag is set to 1. An SCIX1 interrupt is also generated if the value of the ICR.CF0MIE bit is 1. Reception of Control Field 1 by the SCIn starts after that. If the data received in Control Field 0 do not match the data set in the CF0DR register, a transition to the state prior to Break Field low width detection proceeds.
5. If the data received in Control Field 1 match the data set in registers PCF1DR and SCF1DR, the STR.CF1MF flag is set to 1. An SCIX1 interrupt is also generated if the value of the ICR.CF1MIE bit is 1. Transfer of the Information Frame by the SCIn starts after that. If the data received in Control Field 1 do not match the data set in either or both of registers PCF1DR and SCF1DR, a transition to the state prior to Break Field low width detection proceeds.

Omit the Break Field and Control Field 0 to suit the structure of the Start Frame.

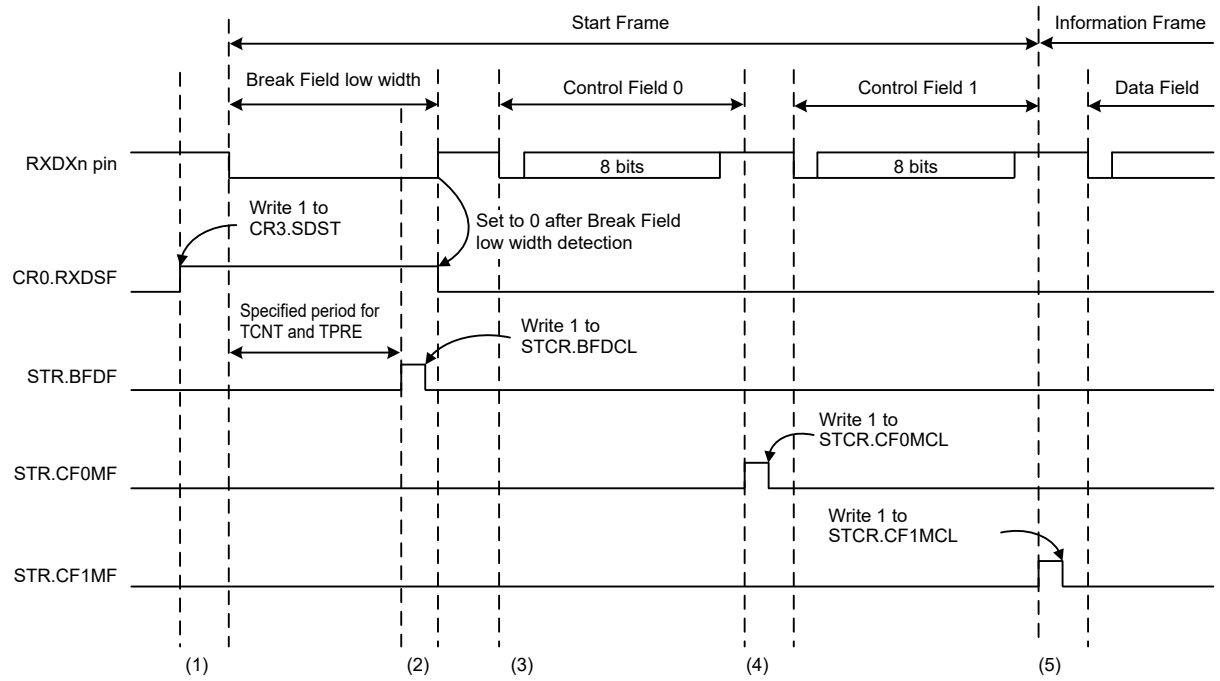

The above diagram assumes the following:

ESMER: ESME = 1

CR1: BFE = 1, CF0RE = 1, CF1DS[1:0] = 10b

PCR: RXDXPS = 0

ICR: BFDIE = 1, CF0MIE = 1, CF1MIE = 1

TMR: TOMS[1:0] = 01b

Note: n = 1

Figure 25.107 Example of operations at the time of Start Frame reception

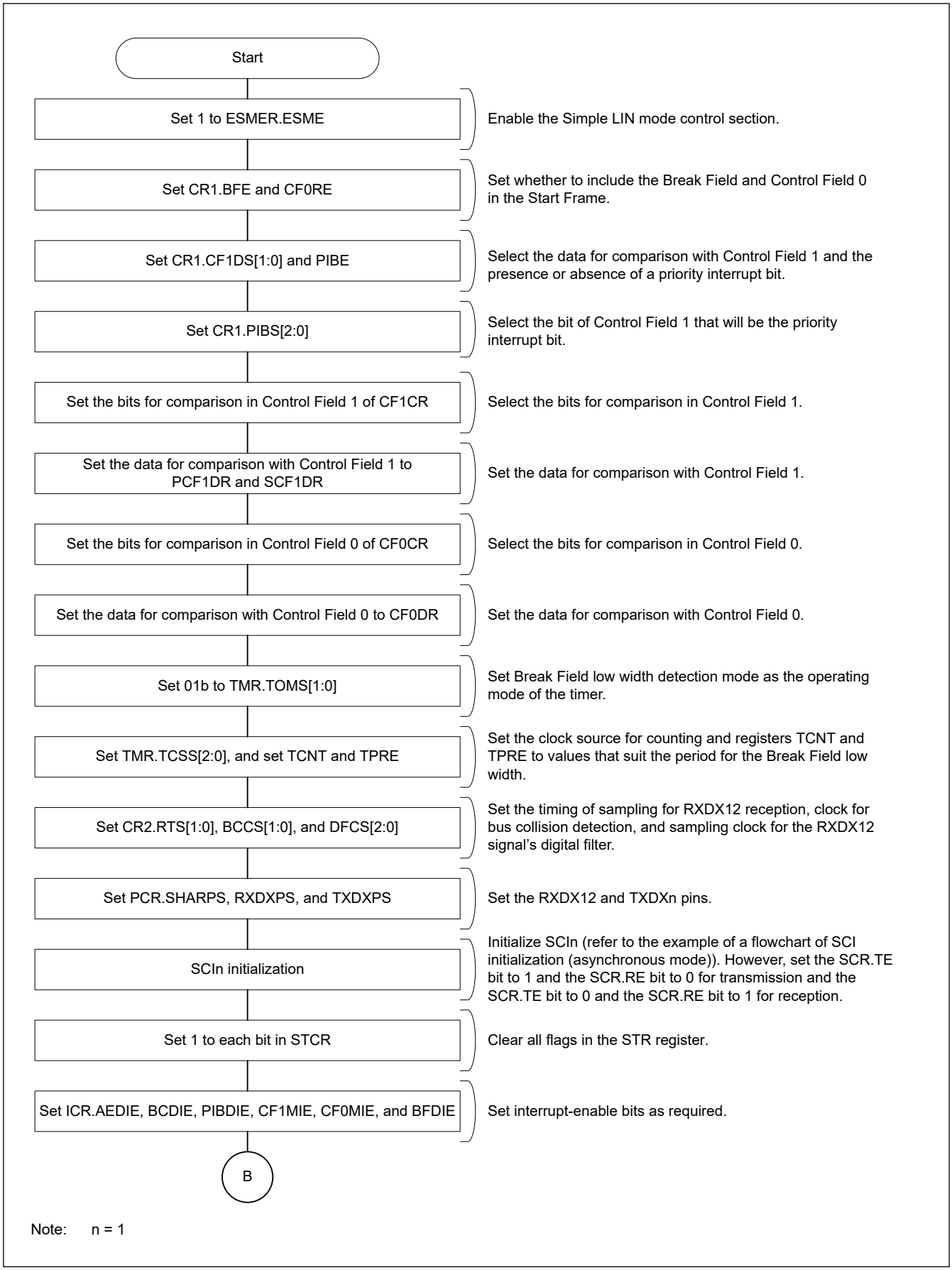

Figure 25.108 Sample flowchart for reception of a Start Frame (1)

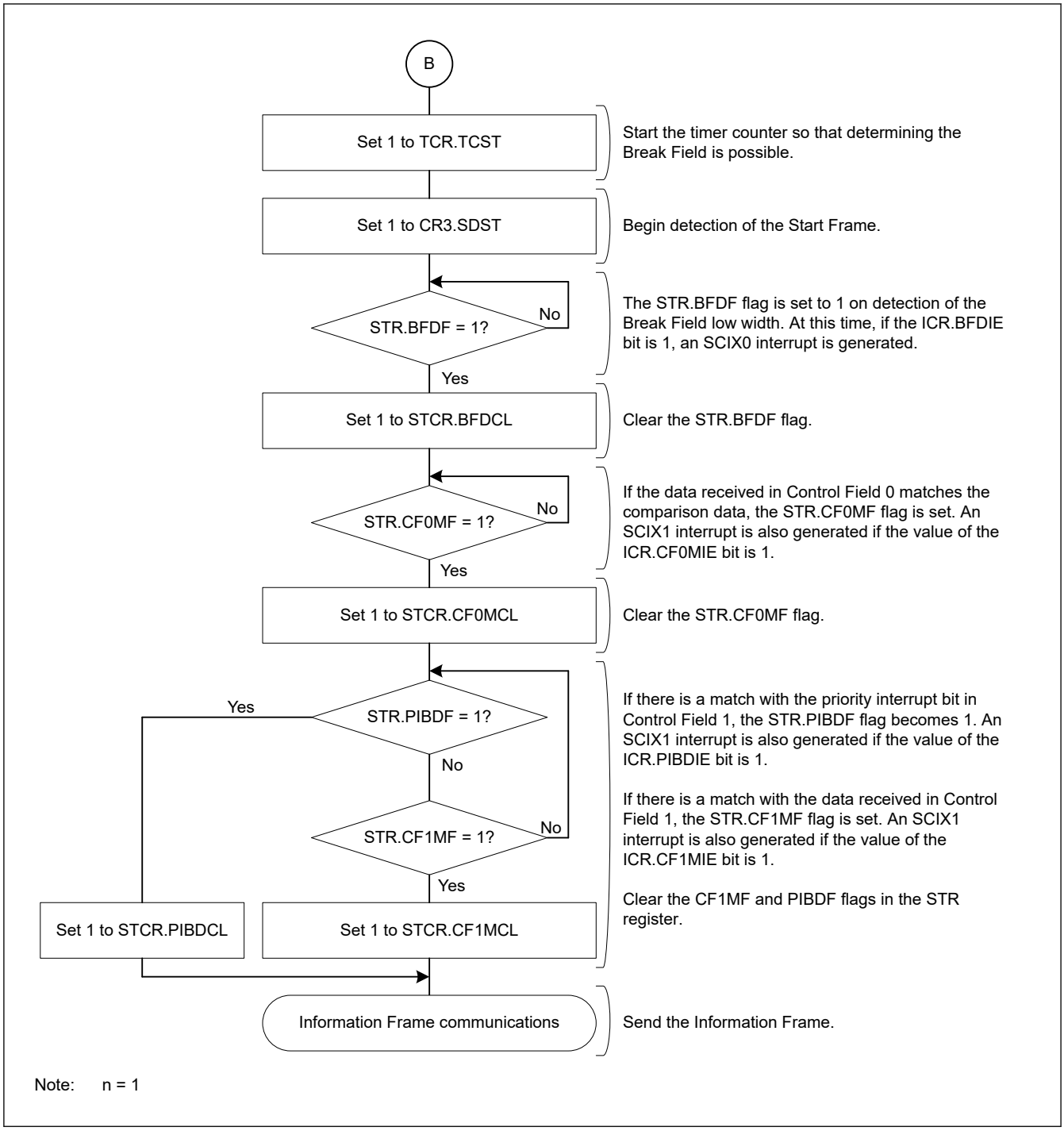

Figure 25.109 Sample flowchart for reception of a Start Frame (2)

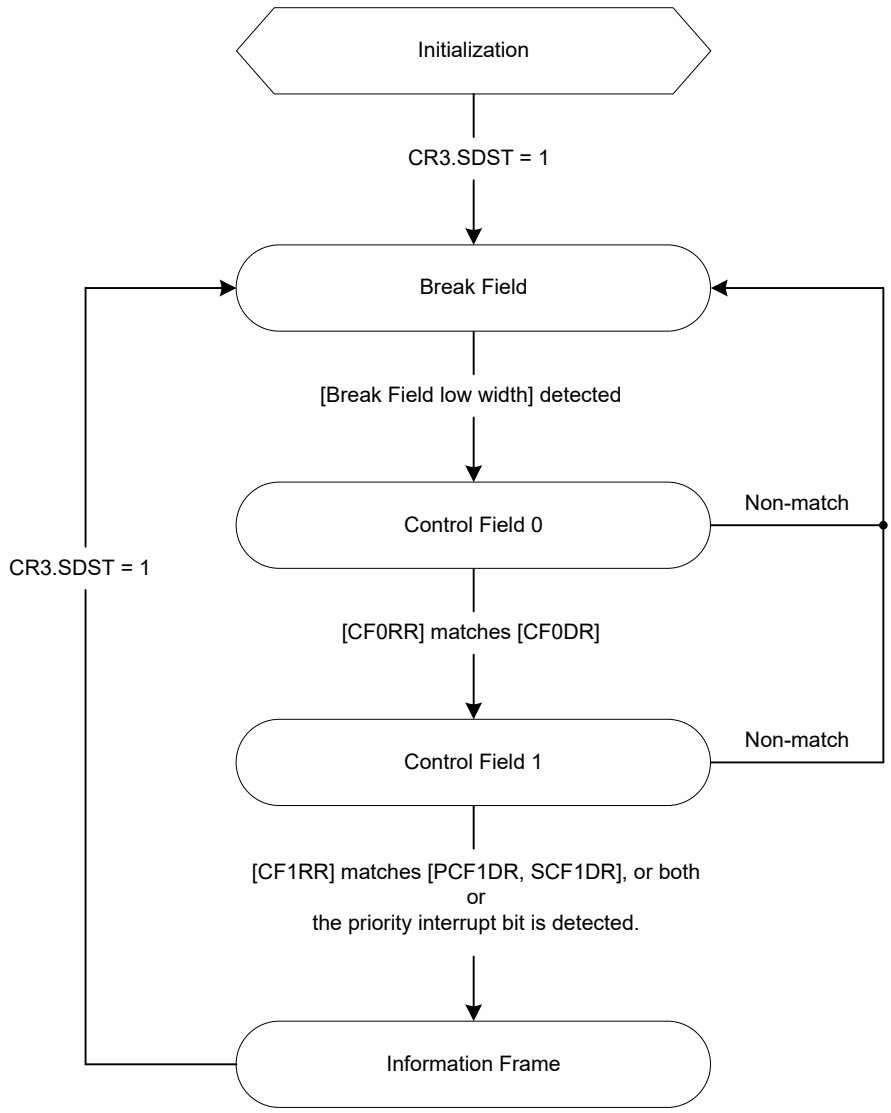

Note: If you want to restart the Initialization after the Information Frame is complete, set the following: ESMER.ESME = 0.

Figure 25.110 State transitions when receiving a Start Frame

25.11.3.1 Priority Interrupt Bit

Figure 25.111 shows an example of operation in Start Frame reception where a priority interrupt bit is in use. Setting the CR1.PIBE bit to 1 enables the use of a priority interrupt bit.

Operations of the Simple LIN mode control section in start Frame reception where a priority interrupt bit is in use are as described below.

Steps (1) to (4) are the same as in Figure 25.107, for Start Frame reception.

(5) If the value of the bit selected by the CR1.PIBS[2:0] bits matches the corresponding bit in the PCF1DR register, the STR.PIBDF flag is set to 1. An SCIX1 interrupt is also generated if the value of the ICR.PIBDIE bit is 1. Transfer of the Information Frame by the SCIn (n = 1) starts after that. If the data received in Control Field 1 do not match the data set in either or both of registers PCF1DR and SCF1DR and the priority interrupt bit is not detected, a transition to the state prior to Break Field low width detection proceeds.

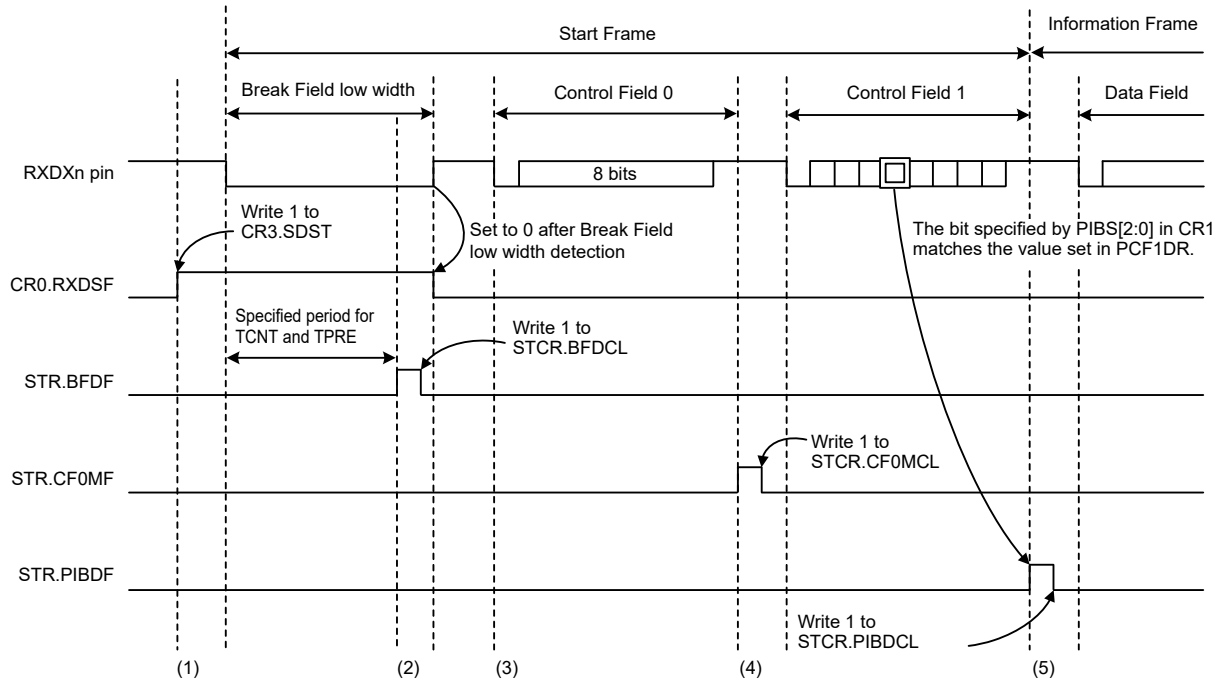

The above diagram assumes the following:

ESMER: ESME = 1

CR1: BFE = 1, PIBE = 1, CF0RE = 0, CF1DS[1:0] = 10b, PIBS[2:0] = 011b

PCR: RXDXPS = 0

ICR: BFDIE = 1, CF0MIE = 1, PIBDIE = 1

TMR: TOMS[1:0] = 01b

Note: n = 1

Figure 25.111 Example of operations when receiving a Start Frame while the CR1.PIBE bit is 1

25.11.4 Detection of Bus Collisions

Detection of bus collisions operate for cases where output of the Break Field low width and transmission of data by the SCIn (n = 1) are in progress when the ESMER.ESME bit and the SCIn.SCI.TE bit are set to 1.

Figure 25.112 shows an example of operations with bus collision detection. Signals output through TXDXn and input through RXDXn are sampled with the bus collision detection clock set with the CR2.BCCS[1:0] bits as the sampling clock, and the STR.BCDF flag is set to 1 if the signals fail to match three times in a row. An SCIX2 interrupt is also generated if the value of the ICR.BCDIE bit is 1.

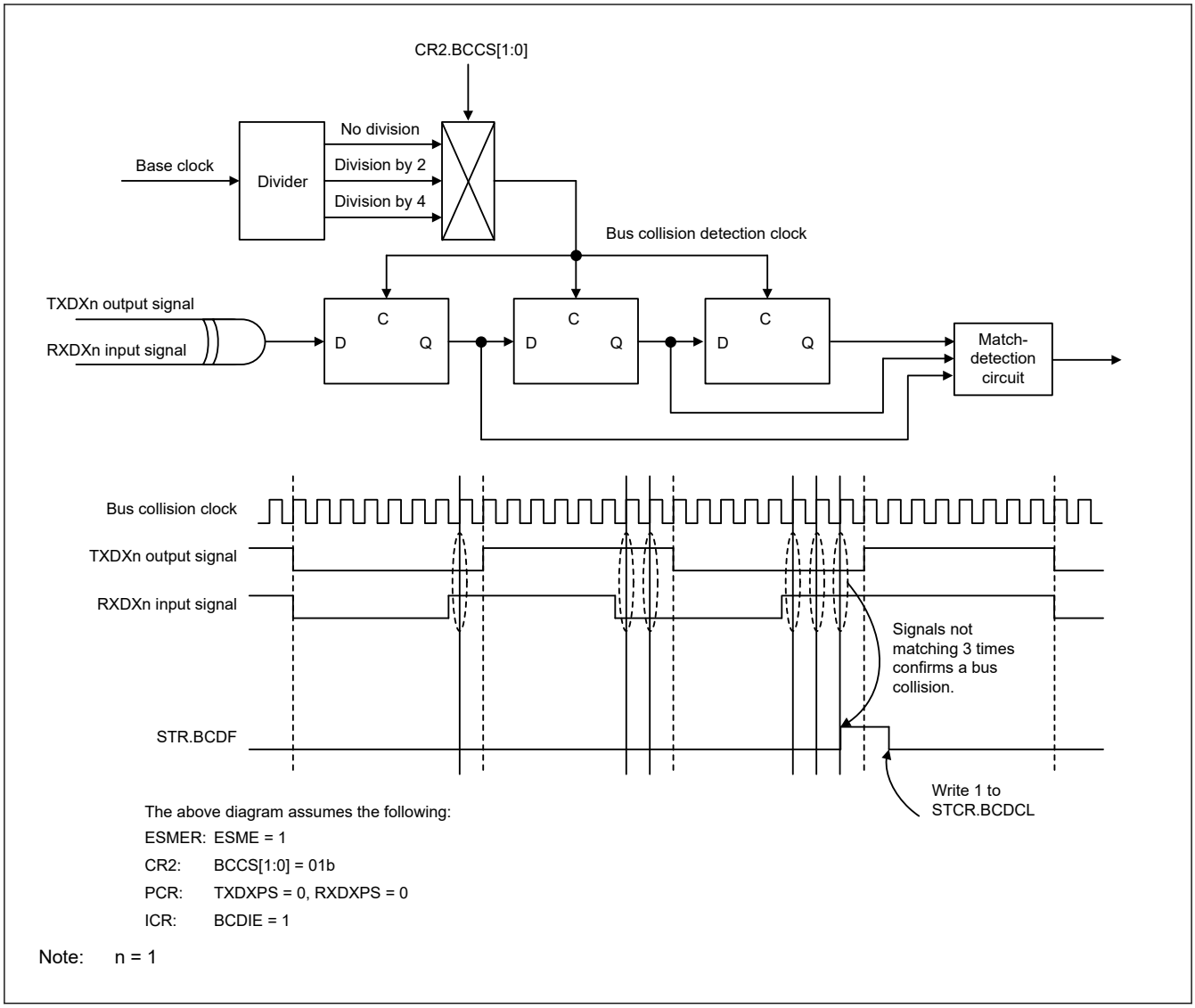

Figure 25.112 Example of operations with bus collision detection

25.11.5 Digital Filter for Input on the RXDXn (n = 1) Pin

Signals input through the RXDXn pin can be passed through a digital filter before they are conveyed to the internal circuits. The digital filter consists of three flip-flop circuit stages connected in series and a match-detecting circuit. The CR2.DFCS[2:0] bits select the sampling clock for the RXDXn pin input signals. If the outputs of all three latches match, the given level is conveyed to subsequent circuits. If the levels do not match, the previous value is retained. In other words, levels are confirmed as being the signal if they are retained for at least three cycles of the sampling clock but judged to be noise rather than changes in the signal level if they change within three cycles of the sampling clock. Figure 25.113 shows an example of operations with the digital filter.

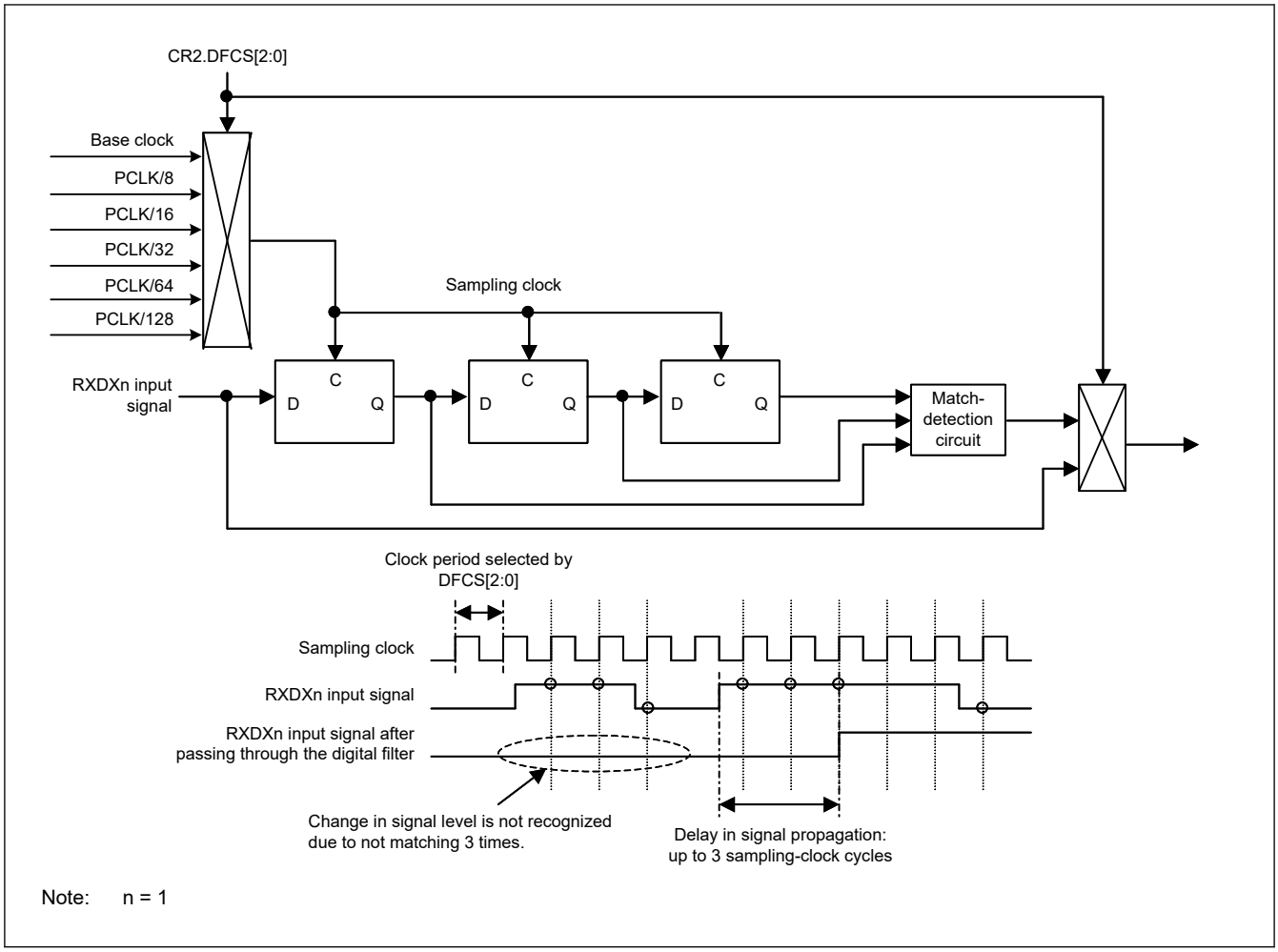

Figure 25.113 Example of operations with the digital filter

25.11.6 Bit Rate Measurement

The bit rate measurement function measures the intervals between rising and falling edges and between falling and rising edges of the signal input from the RXDXn (n = 1) pin. Figure 25.114 shows an example of operations for bit rate measurement.

1. Writing 1 to the CR0.BRME bit enables bit rate measurement. Only set the BRME bit to 1 when you wish to proceed with bit rate measurement. Furthermore, bit rate measurement will not proceed during a Break Field, even if the BRME bit is set to 1.
2. After detection of the Break Field low width, bit rate measurement starts when the level input on the RXDXn pin becomes high.
3. Once bit rate measurement has started, counter values from the timer are retained in the read buffers on the input of valid edges from the RXDXn pin (rising and falling edges) and the counter is reloaded. An SCIX3 interrupt is also generated if the value of the ICR.AEDIE bit is 1. Retention by registers TCNT and TPRE is released by reading these registers.
4. The bit rate as calculated from the values counted during intervals between valid edges can be used for adjusting the rate by changing the settings of the SCIn. To disable the bit rate measurement after a match with Control Field 1, write 0 to the CR0.BRME bit.

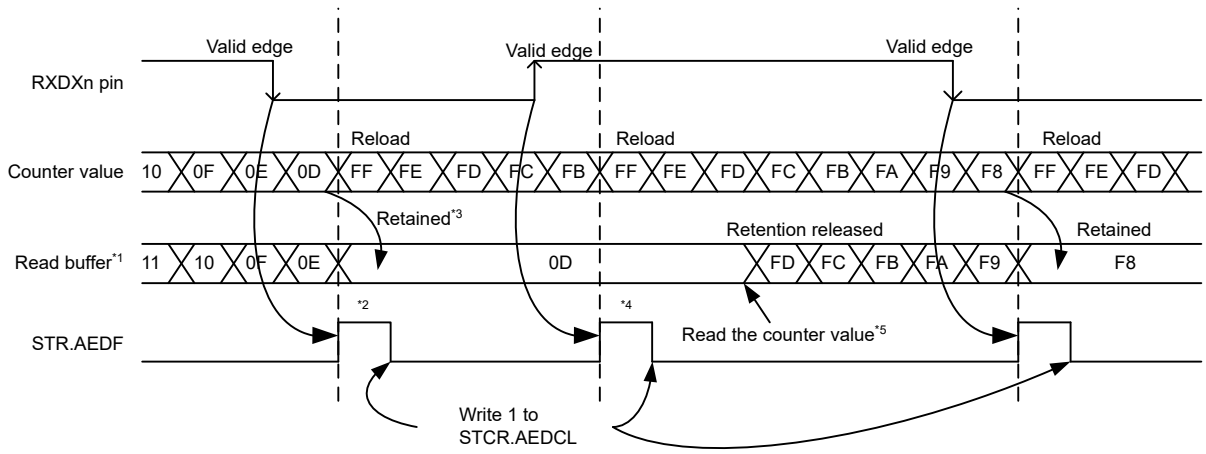

Note: n = 1
Note 1. The TCNT or TPRE register indicates the contents of the read buffers.
Note 2. The STR.AEDF flag becomes 1 on detection of a valid edge.
Note 3. When an effective edge is detected, the current value of the counter is stored in the read buffer.
Note 4. The value retained in the read buffers due to one valid edge is not updated to the new value even if a further valid edge is detected.
Note 5. Retention of a value in a read buffer due to a valid edge is released by reading the TCNT or TPRE register.

Figure 25.114 Example of operations for bit rate measurement

25.11.7 Selectable Timing for Sampling Data Received through RXDXn (n = 1)

The Simple LIN mode control section provides a way of adjusting the timing for the sampling of data received through the RXDXn pin of an SCIn by setting the CR2.RTS[1:0] bits to select the rising edges of 8th, 10th, 12th, or 14th cycle of the SCI base clock. If the value of the SEMR.ABCS bit is 1, the bits select the rising edges of 4th, 5th, 6th, or 7th cycle of the PCLK clock of the SCIn. Figure 25.115 shows timing for the sampling of data received through RXDXn.

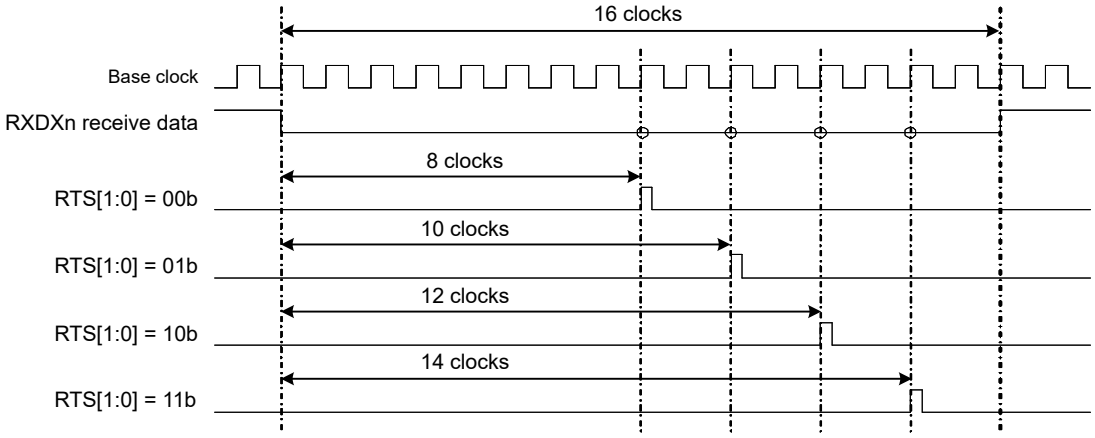

The above diagram assumes the following:
SEMR.ABCS = 0

Note: n = 1

Figure 25.115 Timing for sampling of data received through RXDXn

25.11.8 Timer

The timer has the following operating modes.

(1) Break Field Low Width Output Mode

This mode is for output through the TXDXn (n = 1) pin of the low level over the Break Field low width at the transmission of a Start Frame. Setting the TMR.TOMS[1:0] bits to 10b switches operation to Break Field low width output mode. The TMR.TCSS[2:0] bits select the clock source for the counter. When the TCR.TCST bit is set to 1, the output on the TXDXn pin goes to the low level and counting starts. When the timer underflows, the output on the TXDXn pin goes to the high level and the STR.BFDF flag is set to 1. An SCIX0 interrupt is also generated if the value of the ICR.BFDIE bit is 1. When 0 is written to the TCR.TCST bit, counting stops after reloading of registers TPRE and TCNT. After output of the Break Field low width is completed, stop the timer before it underflows again. Figure 25.116 shows an example of operations in Break Field low width output mode.

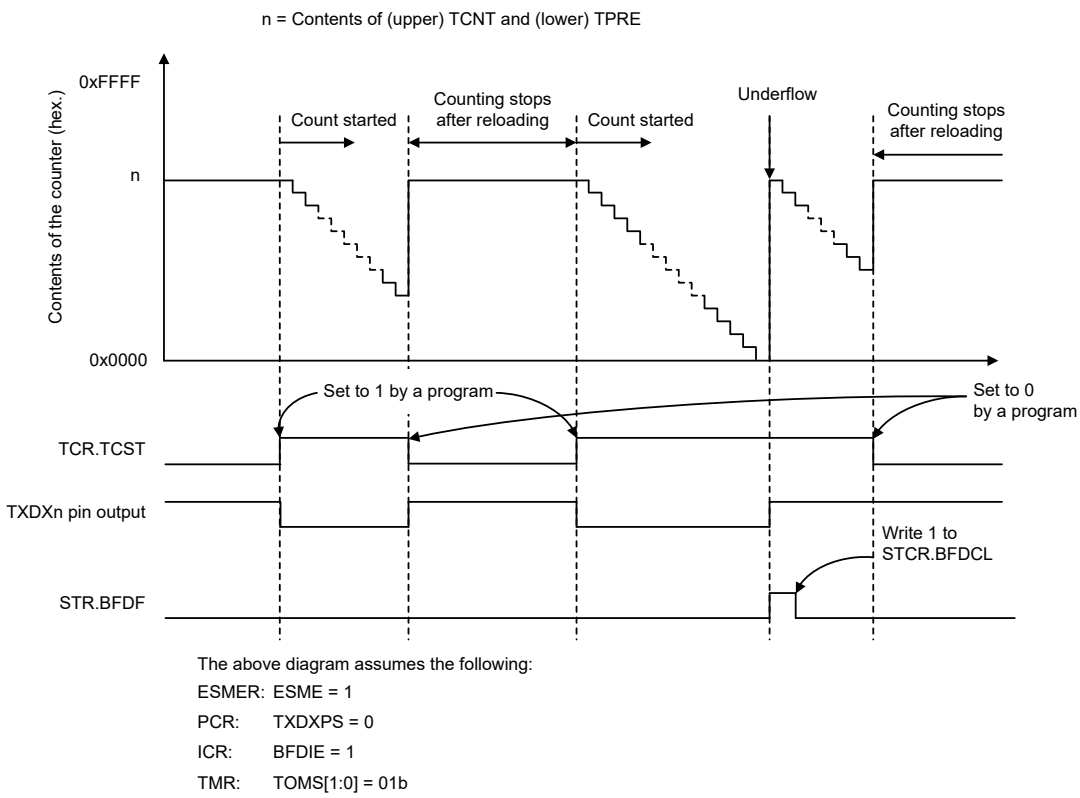

Note: n = 1

Figure 25.116 Example of operations in Break Field low width output mode

(2) Break Field Low Width Determination Mode

This mode is for determining the Break Field low width in the input signal on the RXDXn (n = 1) pin at the reception of a Start Frame. Setting the TMR.TOMS[1:0] bits to 01b switches operation to Break Field low width determination mode. The TMR.TCSS[2:0] bits select the clock source for the counter. When the TCR.TCST bit is set to 1, the interface enters the Break Field low width determinable state. Determination starts when a low level is input from the RXDXn pin. When a high level is then input on the RXDXn pin, registers TPRE and TCNT are reloaded and the interface enters the Break Field low width determinable state. When the timer underflows during Break Field low width determination, the STR.BFDF flag is set to 1. An SCIX0 interrupt is also generated if the value of the ICR.BFDIE bit is 1. If an underflow of the timer during data transfer cause a problem in the form of interrupt generation, stop the timer after Break Field low width determination. Figure 25.117 shows an example of operations in Break Field low width determination mode.

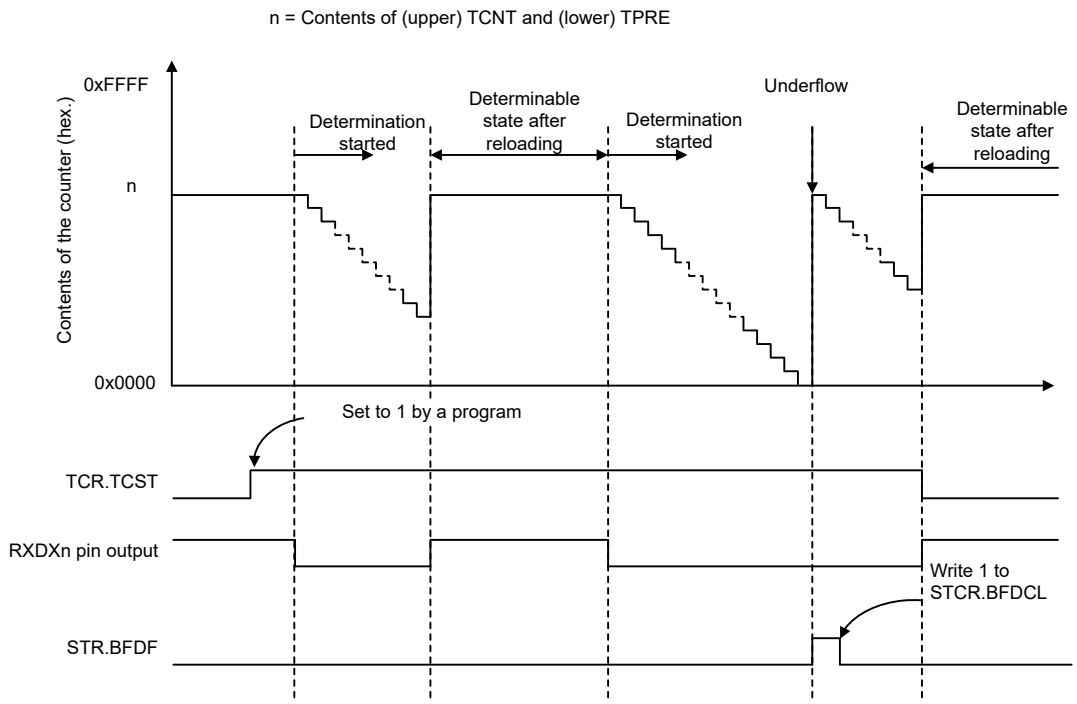

The above diagram assumes the following:

ESMER:	ESME = 1
CR1:	BFE = 0
PCR:	RXDXPS = 0
ICR:	BFDIE = 1
TMR:	TOMS[1:0] = 01b

Note: n = 1

Figure 25.117 Example of operations in Break Field low width determination mode

(3) Timer Mode

This mode is for counting cycles of the internal clock as the clock source. Setting the TMR.TOMS[1:0] bits to 00b switches operation to timer mode. The TMR.TCSS[2:0] bits select the clock source for the counter. Counting starts when 1 is written to the TCR.TCST bit and stops when 0 is written to the TCST bit. Registers TPRE and TCNT both count down. The TPRE register counts cycles of the clock source for counting, and underflows of the TPRE register provide the clock source for counting by the TCNT register. When the timer underflows, the STR.BFDF flag is set to 1. An SCIX0 interrupt is also generated if the value of the ICR.BFDIE bit is 1.

25.12 Interrupt Sources

25.12.1 Buffer Operation for SCIn_TXI and SCIn_RXI Interrupts (Non-FIFO Selected)

If the conditions for an SCIn_TXI and SCIn_RXI interrupt are satisfied while the interrupt status flag in the ICU is 1, the ICU does not output the interrupt request but saves it internally with a capacity for retention of one request per source.

When the interrupt status flag in the ICU is set to 0, the interrupt request retained within the ICU is output. The internally retained interrupt request is automatically discarded when the actual interrupt is output. Clearing of the associated interrupt enable bit (the TIE or RIE bit in the SCR/SCR_SMCI) can also be used to discard an internally retained interrupt request.

25.12.2 Buffer Operation for SCIn_TXI and SCIn_RXI Interrupts (FIFO Selected)

When an interrupt status flag in the ICU is set to 1, the SCIn_TXI and SCIn_RXI interrupts do not output interrupt requests to the ICU. When an interrupt status flag of the ICU is set to 0, and if the conditions for an SCIn_TXI and SCIn_RXI interrupts are satisfied, an interrupt request is generated.

25.12.3 Interrupts in Asynchronous, Manchester, Clock Synchronous, and Simple SPI Modes

(1) Non-FIFO selected

Table 25.42 lists interrupt sources in asynchronous mode, Manchester mode, clock synchronous mode, and simple SPI mode.

A different interrupt vector can be assigned to each interrupt source. Individual interrupt sources can be enabled or disabled with the enable bits in the SCR register.

If the SCR.TIE bit is 1, an SCIn_TXI interrupt request is generated when transmit data is transferred from the TDR or TDRHL register*1 to the TSR register. An SCIn_TXI interrupt request can also be generated by using a single instruction to set the SCR.TE and SCR.TIE bits to 1 at the same time. An SCIn_TXI interrupt request can activate the DTC or DMAC to handle data transfer.

An SCIn_TXI interrupt request is not generated by setting the SCR.TE bit to 1 when SCR.TIE is 0 or by setting the SCR.TIE bit to 1 when the SCR.TE is 1.*2

When new data is not written by the time of transmission of the last bit of the current transmit data and SCR.TEIE is 1, the SSR.TEND flag is set to 1 and an SCIn_TEI interrupt request is generated. Additionally, when SCR.TE is 1, the SSR.TEND flag retains the value 1 until more transmit data is written to the TDR or TDRHL register*1, and setting SCR.TEIE to 1 leads to the generation of an SCIn_TEI interrupt request.

Writing data to the TDR or TDRHL register*1 leads to clearing of the SSR.TEND flag and, after a certain time, discarding of the SCIn_TEI interrupt request.

If the SCR.RIE bit is 1, an SCIn_RXI interrupt request is generated when received data is stored in the RDR register. An SCIn_RXI interrupt request can activate the DTC or DMAC to handle data transfer.

Setting any of the SSR.ORER, FER, PER and MER*3 flags to 1 when the SCR.RIE bit is 1 leads to the generation of an SCIn_ERI interrupt request.

An SCIn_RXI interrupt request is not generated in this case. Clearing all these flags (ORER, FER, PER, MER*3, SYER*3, PFER*3 and SBER*3) leads to discarding of the SCIn_ERI interrupt request.

Note 1. When asynchronous mode and 9-bit data length are selected.
Note 2. To temporarily prohibit SCIn_TXI interrupts on transmission of the last of the data when a new round of transmission is to be started, after handling the transmission-completed interrupt, control activation of the interrupt by using the interrupt request enable bit in the ICU rather than using the SCR.TIE bit. This approach can prevent the suppression of SCIn_TXI interrupt requests in the transfer of new data.
Note 3. MER, SYER, PFER, and SBER work as a factor of SCIn_ERI interrupt only in Manchester mode. SYER, PFER, and SBER also only work if its enable bits (SYEREN, PFEREN, SBEREN in MECR) are set to 1.

(2) FIFO selected

Table 25.43 lists interrupt sources in FIFO selected mode.

If the SCR.TIE bit is 1, an SCIn_TXI interrupt request is generated when the stored amount of data in the FTDRL register becomes the threshold value indicated in FCR.TTRG or below. An SCIn_TXI interrupt request can also be generated by using a single instruction to set the SCR.TIE and SCR.TE bits to 1 simultaneously or by setting SCR.TIE to 1 when SCR.TE is 1.

An SCIn_TXI interrupt request is not generated by setting SCR.TE to 1 when SCR.TIE is 0.

If SCR.TEIE is 1 and if the next data is not written to the FTDRL register by the time the last bit of the transmit data is sent, the SSR_FIFO.TEND flag is set to 1 and the SCIn_TEI interrupt request is generated.

If SCR.RIE is 1, the SCIn_RXI interrupt request is generated when the stored amount of data in the FRDRL register is equal to or greater than the threshold value indicated in FCR.RTRG. When RTRG is 0, an SCIn_RXI interrupt does not occur even when the amount of data in the receive FIFO is equal to 0.

If the SCR.RIE bit is 1, when the SSR_FIFO.ORER flag is set to 1 or data with a framing error or a parity error is stored in the FRDRL register, the SCIn_ERI interrupt request is generated. When the amount of data stored in the FRDRL register is at the threshold value or above, the SCIn_RXI interrupt request is also generated. The SCIn_ERI interrupt request can be canceled, in which case SSR_FIFO.ORER, FER, and PER flags are all cleared.

Table 25.42 SCI interrupt sources with non-FIFO selected

Name		Interrupt source	Interrupt flag	Interrupt enable	DTC or DMAC activation
SCIn_ERI (n = 0, 1, 3 to 5, 9)		Receive error*1	SSR.ORER, SSR.FER, SSR.PER, DCCR.DFER, DCCR.DPER, (SSR.MER, MESR.SYER, MESR.PFER, MESR.SBER)*2	SCR.RIE	Not possible
SCIn_RXI	(n = 0, 1, 3 to 5, 9)	Receive data full	SSR.RDRF	SCR.RIE	Possible
	(n = 0, 3 to 5, 9)	Address match	DCCR.DCMF	SCR.RIE	Possible
SCIn_AM (n = 0, 3 to 5, 9)		Address match	DCCR.DCMF	—	Not possible
SCIn_TXI (n = 0, 1, 3 to 5, 9)		Transmit data empty	SSR.TDRE	SCR.TIE	Possible
SCIn_TEI (n = 0, 1, 3 to 5, 9)		Transmit end	SSR.TEND	SCR.TEIE	Not possible

Note 1. The interrupt flag is only ORER when in clock synchronous and simple SPI mode.
Note 2. MER, SYER, PFER, and SBER work as a factor of ERI interrupt only in Manchester mode. SYER, PFER, and SBER also only work if its enable bits (SYEREN, PFEREN, SBEREN in MECR) are set to 1.

Table 25.43 SCI interrupt sources with FIFO selected

Name	Interrupt source	Interrupt flag	Interrupt enable	DTC or DMAC activation
SCIn_ERI (n = 0, 3 to 5, 9)	Receive error*1	SSR_FIFO.ORER, SSR_FIFO.FER, SSR_FIFO.PER, DCCR.DFER, DCCR.DPER	SCR.RIE	Not possible
		SSR_FIFO.DR (when FCR.DRES = 1)	SCR.RIE	Not possible
SCIn_RXI (n = 0, 3 to 5, 9)	Receive data full	SSR_FIFO.RDF	SCR.RIE	Possible
	Receive data ready	SSR_FIFO.DR (when FCR.DRES = 0)	SCR.RIE	Possible
	Address match	DCCR.DCMF	SCR.RIE	Possible
SCIn_AM (n = 0, 3 to 5, 9)	Address match	DCCR.DCMF	—	Not possible
SCIn_TXI (n = 0, 3 to 5, 9)	Transmit data empty	SSR_FIFO.TDFE	SCR.TIE	Possible
SCIn_TEI (n = 0, 3 to 5, 9)	Transmit end	SSR_FIFO.TEND	SCR.TEIE	Not possible

Note 1. The interrupt flag is only ORER when in clock synchronous and simple SPI mode.

25.12.4 Interrupts in Smart Card Interface Mode

Table 25.44 lists interrupt sources in smart card interface mode. A transmit end interrupt (SCIn_TEI) request and an address match (SCIn_AM) request cannot be used in this mode.

Table 25.44 SCI interrupt sources

Name	Interrupt source	Interrupt flag	Interrupt enable	DTC or DMAC activation
SCIn_ERI (n = 0, 1, 3 to 5, 9)	Receive error or error signal detection	SSR_SMCI.ORER, SSR_SMCI.PER, SSR_SMCI.ERS	SCR_SMCI.RIE	Not possible
SCIn_RXI (n = 0, 1, 3 to 5, 9)	Receive data full	SSR_SMCI.RDRF	SCR_SMCI.RIE	Possible
SCIn_TXI (n = 0, 1, 3 to 5, 9)	Transmit data empty	SSR_SMCI.TEND	SCR_SMCI.TIE	Possible

Data transmission or reception using the DTC or DMAC is also possible in smart card interface mode, similar to normal SCI mode. In transmission, when the SSR_SMCI.TEND flag is set to 1, an SCIn_TXI interrupt request is generated. This SCIn_TXI interrupt request activates the DTC or DMAC, allowing transfer of transmit data if the SCIn_TXI request is previously specified as a source of DTC or DMAC activation. The TEND flag is automatically set to 0 when the DTC or DMAC transfers the data.

If an error occurs, the SCI automatically retransmits the same data. During the retransmission, the TEND flag is kept at 0 and the DTC or DMAC is not activated. Therefore, the SCI and DTC or DMAC automatically transmit the specified number of bytes, including retransmission after an error occurrence. However, the SSR_SMCI.ERS flag is not automatically set to 0 at error occurrence. Therefore, the ERS flag must be cleared by previously setting the SCR_SMCI.RIE bit to 1 to enable an SCIn_ERI interrupt request to be generated at error occurrence.

When transmitting or receiving data using the DTC or DMAC, always enable the DTC or DMAC before making the SCI settings. For DTC or DMAC settings, see section 16, Data Transfer Controller (DTC), section 15, DMA Controller (DMAC).

In reception, an SCIn_RXI interrupt request is generated when receive data is set to the RDR register. This SCIn_RXI interrupt request activates the DTC or DMAC, allowing transfer of the receive data if the SCIn_RXI request is previously specified as a source of DTC or DMAC activation. If an error occurs, the error flag is set. Therefore, the DTC or DMAC is not activated and an SCIn_ERI interrupt request is issued to the CPU instead. The error flag must be cleared.

25.12.5 Interrupts in Simple IIC Mode

Table 25.45 lists the interrupt sources in simple IIC mode. The STI interrupt is allocated to the transmit end interrupt (SCIn_TEI) request. The receive error interrupt (SCIn_ERI) and the address match (SCIn_AM) request cannot be used.

The DTC or DMAC can also be used to handle transfer in simple IIC mode.

When the SIMR2.IICINTM bit is 1:

- An SCIn_RXI request is generated on the falling edge of the SCLn signal for the 8th bit. If SCIn_RXI is previously set up as an activation source for the DTC or DMAC, the SCIn_RXI request activates the DTC or DMAC to handle transfer of the received data.
- An SCIn_TXI request is generated on the falling edge of the SCLn signal for the 9th bit (acknowledge bit). If SCIn_TXI is previously set up as an activation source for the DTC or DMAC, the SCIn_TXI request activates the DTC or DMAC to handle transfer of the transmit data.

When the SIMR2.IICINTM bit is 0:

- An SCIn_RXI request (ACK detection) is generated if the input on the SDAn pin is low on the rising edge of the SCLn signal for the 9th bit (acknowledge bit)
- An SCIn_TXI request (NACK detection) is generated if the input on the SDAn pin is high on the rising edge of the SCLn signal for the 9th bit (acknowledge bit)
- If SCIn_RXI is previously set up as an activation source for the DTC or DMAC, the SCIn_RXI request activates the DTC or DMAC to handle transfer of the received data.

If the DTC or DMAC is used for data transfer in reception or transmission, always set up and enable the DTC or DMAC before setting up the SCI.

When the IICSTAREQ, IICRSTAREQ, and IICSTPREQ bits in SIMR3 are used to generate a start condition, restart condition, or stop condition, the STI request is issued when generation is complete.

Table 25.45 SCI interrupt sources

Name	Interrupt source	Interrupt flag	Interrupt enable	DTC or DMAC activation
SCIn_RXI (n = 0, 1, 3 to 5, 9)	Reception, ACK detection	—	SCMR.RIE	Possible*1
SCIn_TXI (n = 0, 1, 3 to 5, 9)	Transmission, NACK detection	—	SCMR.TIE	Possible
SCIn_TEI(STIn) (n = 0, 1, 3 to 5, 9)	Completion of generation of a start, restart, or stop condition	SIMR3.IICSTIF	SCMR.TEIE	Not possible

Note 1. Activation of the DTC or DMAC is only possible when the SIMR2.IICINTM bit is 1 (use reception and transmission interrupts).

25.12.6 Interrupt Requests from the Simple LIN Mode Control Section

The Simple LIN Mode Control section has a total of six types of interrupt request for generating the SCIX0 interrupt (Break Field low width detected), SCIX1 interrupt (Control Field 0 match, Control Field 1 match, priority interrupt bit detected), SCIX2 interrupt (bus collision detected), and SCIX3 interrupt (valid edge detected). When any of the interrupt factors is generated, the corresponding status flag is set to 1. Details of all of the interrupt requests are listed in Table 25.46.

Table 25.46 Interrupt sources of the Simple LIN Mode Control section

Interrupt request	Status flag	Interrupt factors
SCIX0 interrupt (Break Field low width detected)	BFDF	• Detection of a Break Field low width longer than the interval corresponding to the timer setting • Completion of the output of a Break Field low width over the interval corresponding to the timer setting • Underflow of the timer
SCIX1 interrupt (Control Field 0 match)	CF0MF	The data received in Control Field 0 matching the value set in CF0DR
SCIX1 interrupt (Control Field 1 match)	CF1MF	The data received in Control Field 1 matching the value set in PCF1DR or SCF1DR
SCIX1 interrupt (priority interrupt bit detected)	PIBDF	The value of the bit specified as the priority interrupt bit matching the value set in PCF1DR
SCIX2 interrupt (bus collision detected)	BCDF	The output level on the RXDXn (n = 1) pin and the input level on the RXDXn pin not matching on three consecutive cycles of the bus collision detection clock
SCIX3 interrupt (valid edge detected)	AEDF	Detection of a valid edge during bit rate measurement

25.13 Event Linking

By using interrupt request signals as event signals, the SCIn can provide linked operation through the ELC for modules selected in advance.

Event signals can be output regardless of the values of the associated interrupt request enable bits.

(1) Error event output (receive error or error signal detected) (SCIn_ERI, n = 0, 1, 3 to 5, 9)

- Indicates abnormal termination because of a parity error during reception in asynchronous mode
- Indicates abnormal termination because of a framing error during reception in asynchronous mode
- Indicates abnormal termination because of an overrun error during reception
- Indicates detection of the error signal during transmission in smart card interface mode
- The SSR_FIFO.FER and PER flags are 0, and receive data less than the receive FIFO data trigger number is set in a reception FIFO buffer, and it indicates that 15 etus elapse when FIFO is selected and the FCR.DRES bit is 1

(2) Receive data full event output (SCIn_RXI, n = 0, 1, 3 to 5, 9)

- Indicates that ACK is detected if the SIMR2.IICINTM bit is 0 in simple IIC mode
- Indicates that the 8th-bit SCLn falling edge is detected if the SIMR2.IICINTM bit is 1 in simple IIC mode
- When the SIMR2.IICINTM bit is 1 during master transmission in simple IIC mode, set the ELC so that receive data full events are not used

Non-FIFO selected

- Indicates that received data is set in the Receive Data Register (RDR or RDRHL).

FIFO selected

- Using this event output is prohibited.

(3) Transmit data empty event output (SCIn_TXI, n = 0, 1, 3 to 5, 9)

- Indicates that the SCR/SCR_SMCI.TE bit is changed from 0 to 1
- Indicates that transmission is complete in smart card interface mode
- Indicates that NACK is detected if the SIMR2.IICINTM bit is 0 in simple IIC mode
- Indicates that the 9th-bit SCLn falling edge is detected if the SIMR2.IICINTM bit is 1 in simple IIC mode

Non-FIFO selected

- Indicates that transmit data is transferred from the Transmit Data Register (TDR or TDRHL) to the Transmit Shift Register (TSR).

FIFO selected

- Using this event output is prohibited.

(4) Transmit end event output (SCIn_TEI, n = 0, 1, 3 to 5, 9)

- Indicates the completion of transmission
- Indicates that the starting condition, resumption condition, or termination condition is generated in simple IIC mode

Note: When FIFO is selected, using this event output is prohibited.

(5) Address match event output (SCIn_AM, n = 0, 3 to 5, 9)

- Indicates a match of the comparison data (CDR.CMPD) with one frame of receive data when DCCR.DCME is set to 1 in asynchronous mode, including multi-processor mode.

25.14 Address Non-match Event Output (SCI0_DCUF)

SCI0_DCUF indicates the non-match of comparison data (CDR.CMPD) with receive data that is one frame of the data that is received when DCCR.DCME is set to 1 in asynchronous mode, including multi-processor mode. This event can be used for Snooze end request only. For details, see section 10, Low Power Modes.

25.15 Noise Cancellation Function

Figure 25.118 shows the configuration of the noise filter used for noise cancellation. The noise filter consists of a 2-stage flip-flop circuit and a match detection circuit. When the input signals of the noise filter and the output signals of the 2-stage flip-flop circuits completely match, the matched level is conveyed as an internal signal. Unless otherwise matched, the previous value is retained. When the same level is retained for 3 cycles or longer on the sampling clock of the noise filter, it is considered as a valid receive signal. A change in pulse for 3 cycles or shorter is considered as noise, not as a receive signal.

In asynchronous mode, the noise cancellation function can be applied to the receive signal input to the RXDn pin. The receive level of the RXDn is taken in the flip-flop circuit of the noise filter on the base clock of asynchronous mode.

- When SEMR.ABCS = 0 and SEMR.ABCSE = 0, the cycle is 1/16 of a 1-bit period.
- When SEMR.ABCS = 1 and SEMR.ABCSE = 0, the cycle is 1/8 of a 1-bit period.
- When SEMR.ABCSE = 1, the cycle is 1/6 of a 1-bit period.

In simple IIC mode, this function can be used for each input on SDAn and SCLn. The sampling clock is selected from divided clock of baud rate generator settings SNFR.NFCS[2:0].

If the base clock is stopped once with the noise filter enabled and then the base clock input is restarted again, the noise filter operation resumes from the state where the clock was stopped. When SCR.TE and SCR.RE are set to 0 during base clock input, all of the noise filter flip-flop values are initialized to 1. Accordingly, if the input data is 1 when reception operation resumes, the function determines that a level match is detected and the result is conveyed as an internal signal. When the level being input corresponds to 0, the initial output of the noise filter is retained until the level matches in three consecutive sampling cycles.

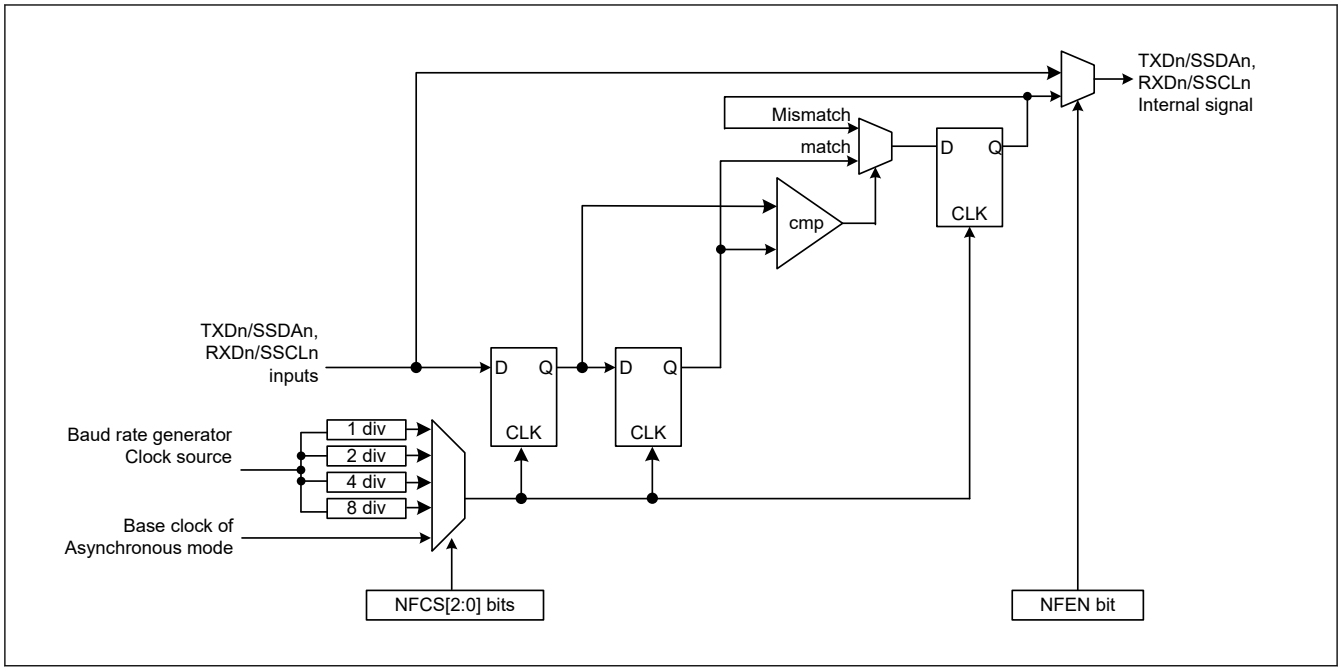

Figure 25.118 Digital noise filter circuit block diagram

25.16 Usage Notes

25.16.1 Settings for the Module-Stop Function

The Module Stop Control Register B (MSTPCRB) can enable or disable SCI operation. The SCI is initially stopped after reset. Releasing the module-stop state enables access to the registers. For details, see section 10, Low Power Modes.

25.16.2 SCI Operation during Low Power State

(1) Transmission

When setting the module to the stopped state or in transitions to Software Standby, stop operations (by setting the TIE, TE, and TEIE bits in the SCR/SCR_SMCI to 0) after switching the TXDn pin to the general I/O port pin function. When setting I/O port as an SCI connection, the SPTR register can control the state of the TXDn pin. Setting the TE bit to 0 initializes the TSR register and the TEND bit in the SSR/SSR_SMCI is initialized to 1 with non-FIFO selected, and the value is retained, with FIFO selected. Depending on the port settings and SPTR register settings, output pins might output the level before a transition to the low-power state is made after release from the module-stopped state or Software Standby mode. When transitions to these states are made during transmission, the transmitted data becomes indeterminate.

To transmit data in the same transmission mode after cancellation of the low-power state:

1. Set the TE bit to 1.
2. Read SSR/SSR_FIFO/SSR_SMCI.
3. Write data to TDR sequentially to start data transmission.

To transmit data with a different transmission mode, initialize the SCI first.

Figure 25.119 shows an example flow of transition to Software Standby mode during transmission. Figure 25.120 and Figure 25.121 show the port pin states during transition to Software Standby mode.

Before specifying the module-stop state or transitioning to Software Standby mode from the transmission mode using DTC or DMAC transfer, stop the transmit operations (TE = 0). To start transmission after cancellation using the DTC or DMAC, set the TE bit to 1. The SCIn_TXI interrupt flag is set to 1 and transmission starts using the DTC or DMAC.

(2) Reception

When address match function is not used as wakeup condition

Before specifying the module-stop state or transitioning to Software Standby mode, stop the receive operations (RE = 0 in SCR/SCR_SMCI). If transition is made during data reception, the received data is invalid.

Figure 25.122 shows an example flow of transition to Software Standby mode during reception.

When address match function is used as wakeup condition

Before specifying the module-stop state or transitioning to Software Standby mode:

1. Set the operations after cancellation of the low power state.
2. Set CDR.CMPD and DCCR.DCME to 1.
3. Set the receive operations (RE = 1 in SCR/SCR_SMCI).
4. Set the module-stop state or Software Standby mode.

When SCI transfers to low power mode, if the receive data pin (RXD) is at the low level, set SEMR.RXDESEL = 0.

When setting SEMR.RXDESEL = 1, there is a possibility that a start bit (falling edge of RXD pin) cannot be detected on release of the low power mode.

Figure 25.123 shows an example flow of transition to Software Standby mode during reception with address match.

When using SCI0 in Snooze mode

When using SCI0 in Snooze mode, some restrictions apply, including maximum bit rates. For details, see section 10, Low Power Modes.

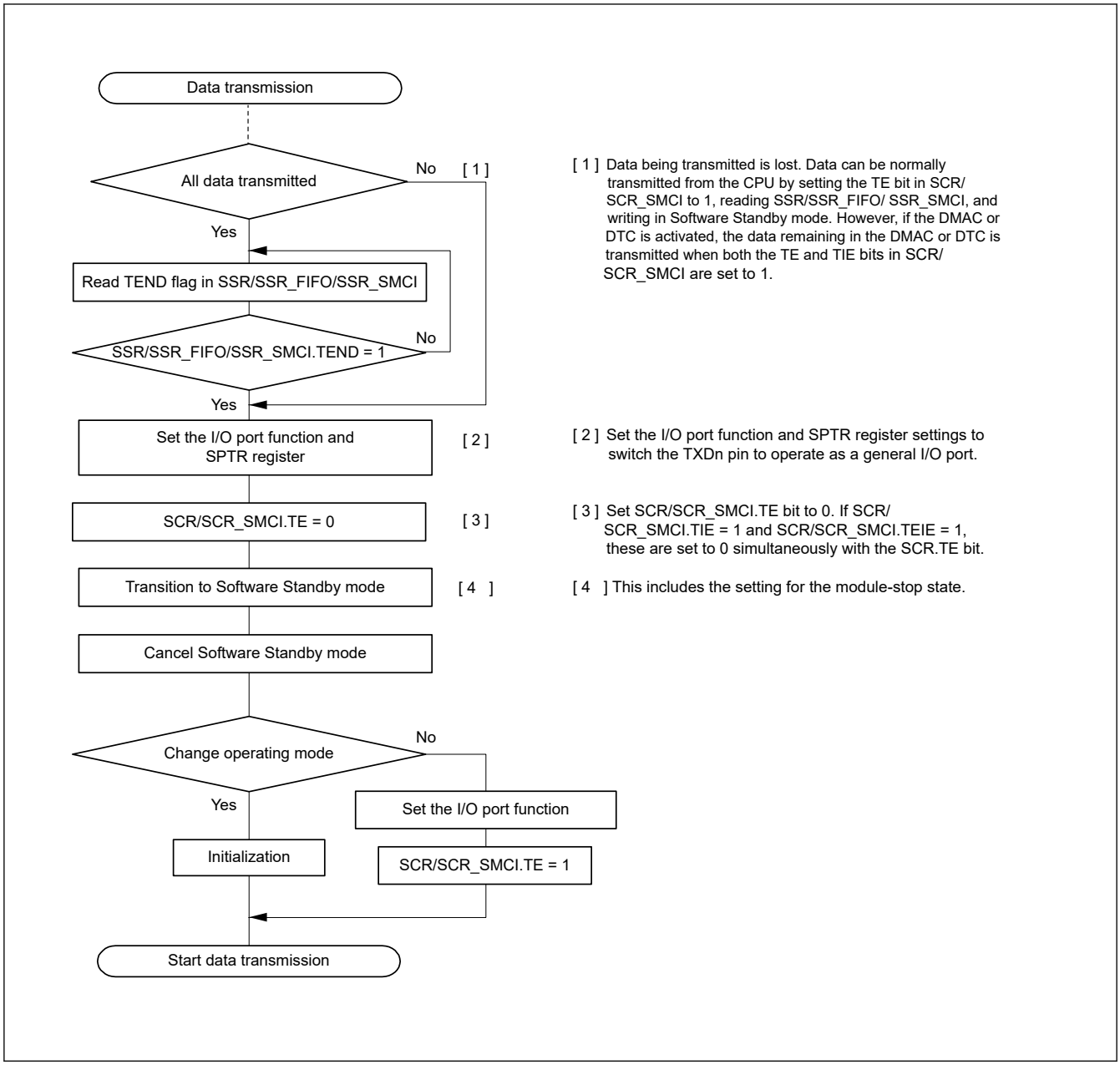

Figure 25.119 Example flow of transition to Software Standby mode during transmission

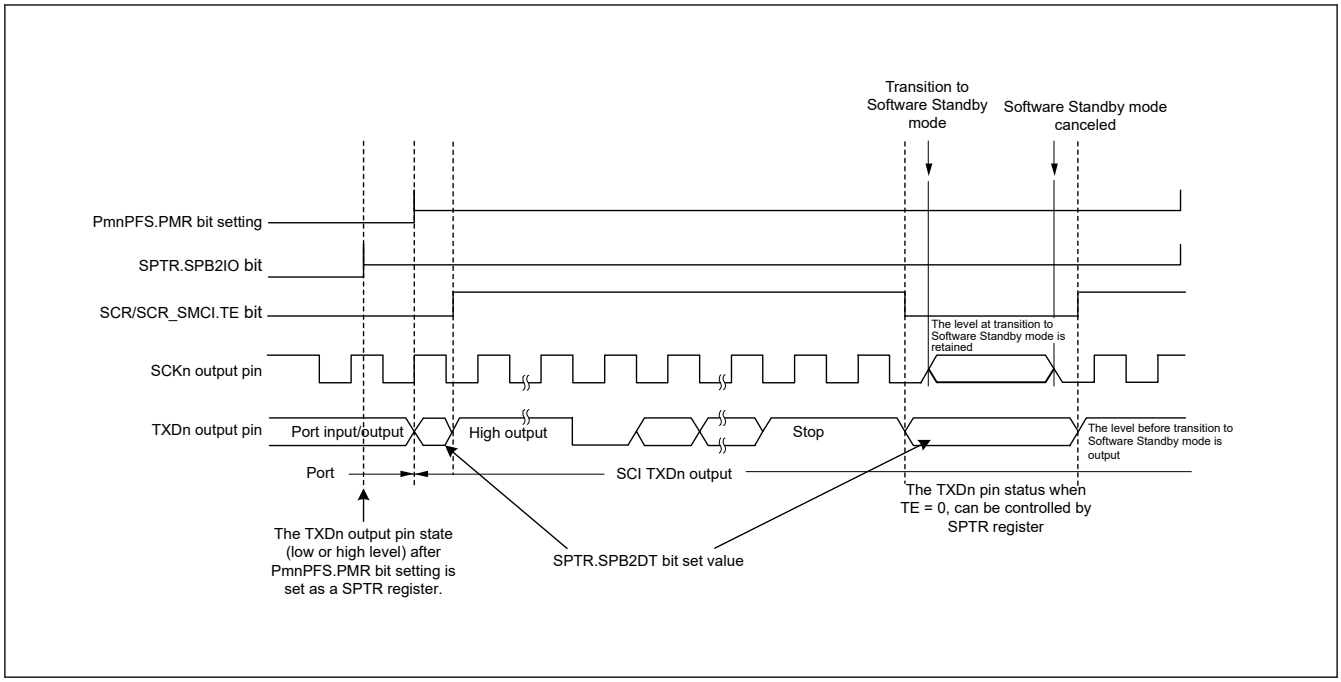

Figure 25.120 Port pin states during transition to Software Standby mode with internal clock and asynchronous transmission

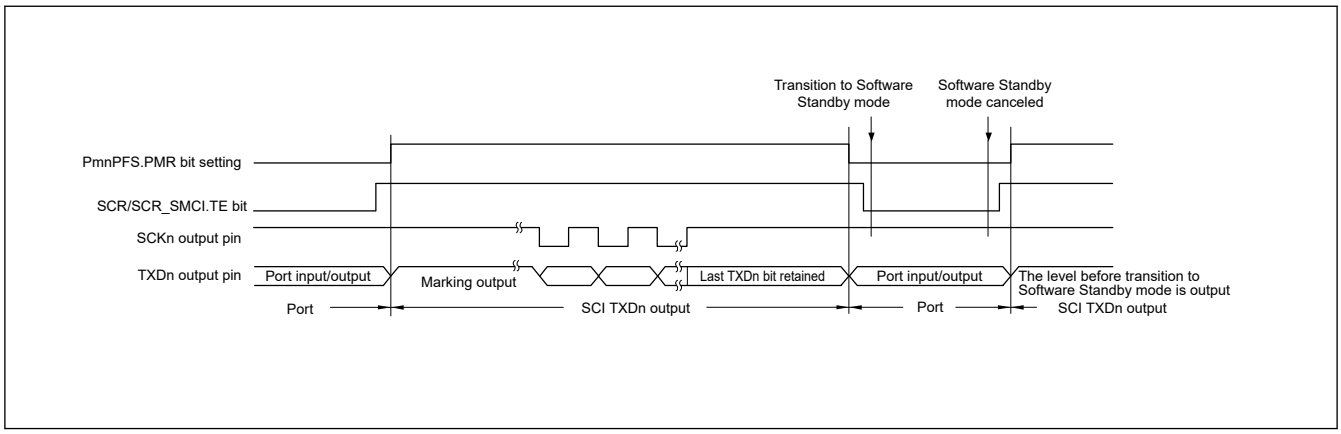

Figure 25.121 Port pin states during transition to Software Standby mode with internal clock and clock synchronous transmission

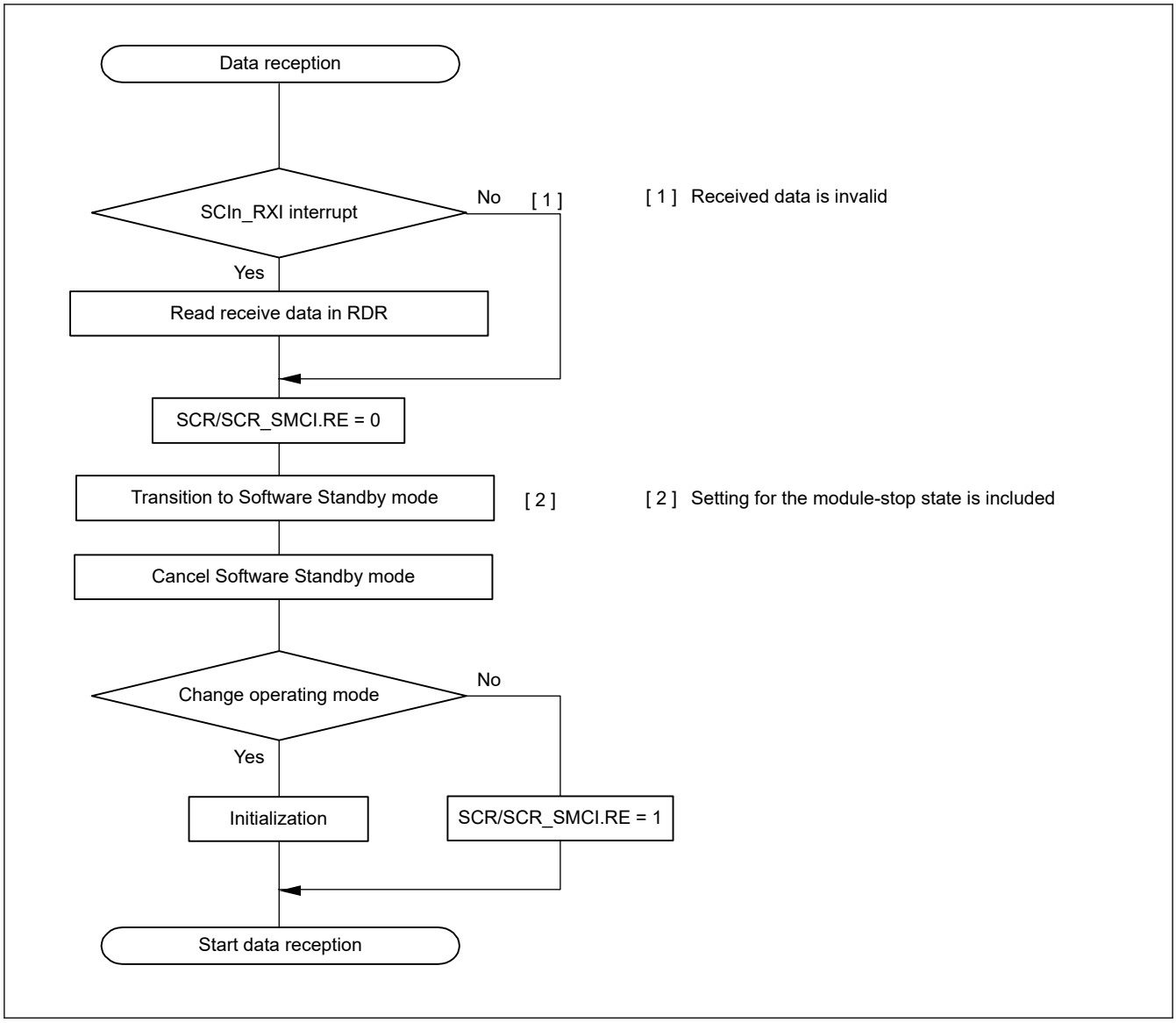

Figure 25.122 Example flow of transition to Software Standby mode during reception

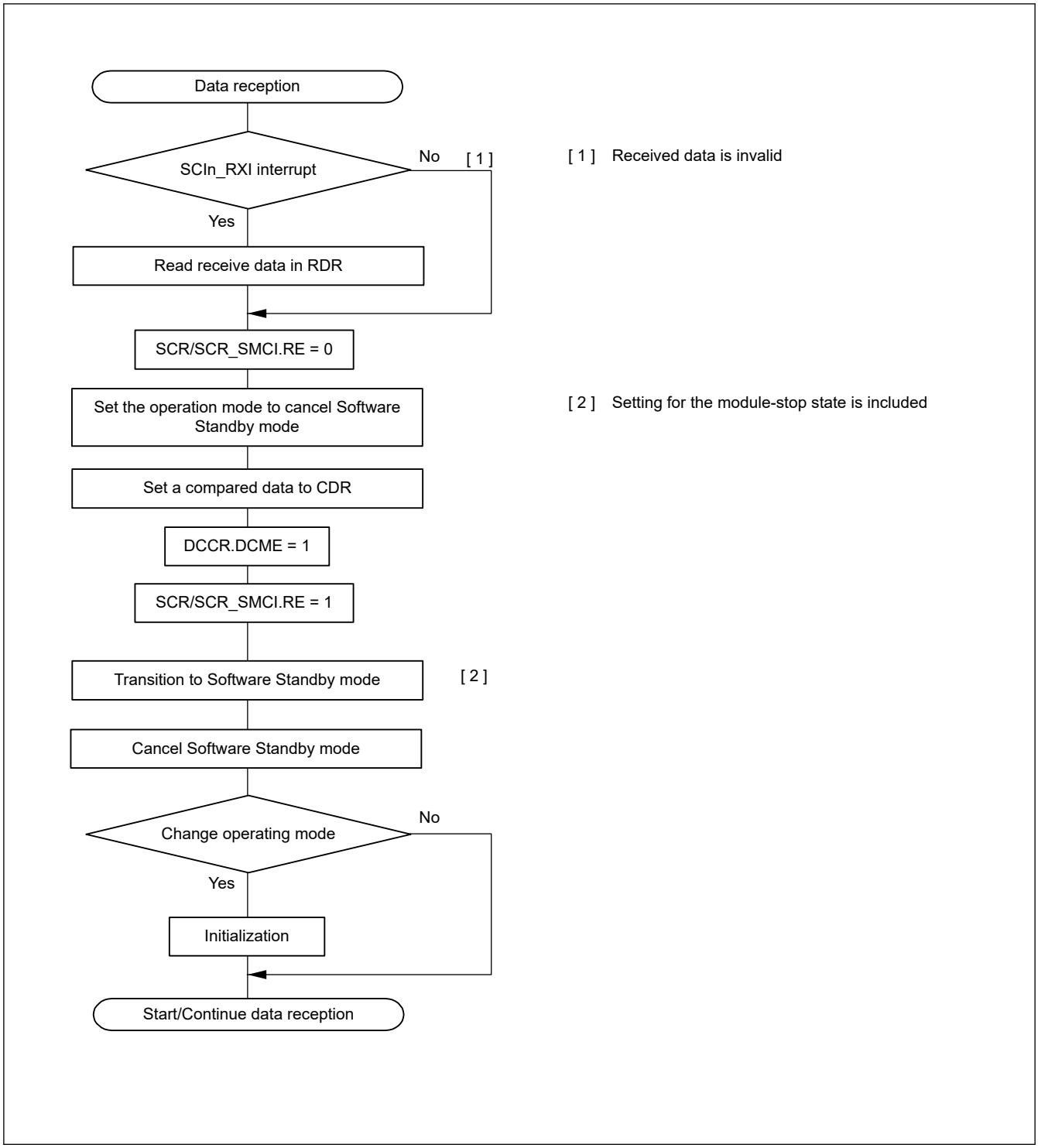

Figure 25.123 Example flow of transition to Software Standby mode during reception with address match

25.16.3 Break Detection and Processing

(1) Non-FIFO selected

When a framing error is detected, a break can be detected by reading the RXDn pin value directly. In a break, the input from the RXDn pin becomes all 0s, and the SSR.FER flag is set to 1 to indicate a framing error, and the SSR.PER flag might also be set to 1 to indicate a parity error. The SCI continues the receive operation even after a break is received. Therefore, even if the FER flag is 0, indicating that no framing error occurred, it is set to 1 again. When the SEMR.RXDESEL bit is 1, the SCI sets the SSR.FER flag to 1 and stops receiving operations until a start bit of the next data frame is detected. If the SSR.FER flag is set to 0, the SSR.FER flag retains 0 during the break.

When the RXDn pin is set to 1 and the break ends, detecting the beginning of the start bit on the first falling edge of the RXDn pin allows the SCI to start the receiving operation.

(2) FIFO selected

After a framing error is detected and when the SCI detects that continuous receive data is 0 for 1 frame, reception stops. When a framing error is detected, a break can be detected by reading the SPTR.RXDMON flag value. After the RXDn signal is in high and the break is finished, data reception to the FRDRHL register resumes.

25.16.4 Mark State and Production of Breaks

When the SCR/SCR_SMCI.TE bit is 0, disabling serial transmission, the state of the TXDn pin can be set using the SPTR.SPB2IO and SPTR.SPB2DT bits. With this approach, a TXDn pin can be placed in the mark state to transmit a break.

Before setting the SCR/SCR_SMCI.TE bit to 1, enabling serial transmission, set the SPB2IO and SPB2DT bits to put the communication line in the mark state (the state of 1), and change the TXDn pin using I/O port function. To output a break on data transmission, after setting the TXDn pin to output 0 by setting the SPB2IO and SPB2DT bits, change the TXDn pin using the I/O port function and set the SCR/SCR_SMCI.TE bit to 0. When the SCR/SCR_SMCI.TE bit is set to 0, the transmitter is initialized regardless of the current state of transmission.

25.16.5 Receive Error Flags and Transmit Operation in Clock Synchronous Mode and Simple SPI Mode

Transmission cannot start when a receive error flag (ORER) in SSR/SSR_FIFO is set to 1, even when data is written to TDR or FTDRL[*1]. Always set the receive error flags to 0 before starting transmission.

Note: The receive error flags cannot be set to 0 when the RE bit in SCR/SCR_SMCI is set to 0 (serial reception is disabled).

Note 1. Do not use the FTDRH register in simple SPI mode.

25.16.6 Restrictions on Clock Synchronous Transmission in Clock Synchronous Mode and Simple SPI Mode

When the external clock source is used as a synchronization clock, the following restrictions apply.

(1) Start of transmission

Wait at least the following time from writing transmit data to TDR to the start of the external clock input:

1 PCLK cycle + data output delay time for the slave (t_{DO}) + setup time for the master (t_{SU}). See Figure 25.124.

(2) Continuous transmission

Write the next transmit data to TDR or TDRHL before the falling edge of the transmit clock for bit [7] . See Figure 25.124.

When updating TDR after bit [7] has started to transmit, update TDR while the synchronization clock is in the low-level period, and set the high-level width of the transmit clock (bit [7]) to 4 PCLK cycles or longer. See Figure 25.124.

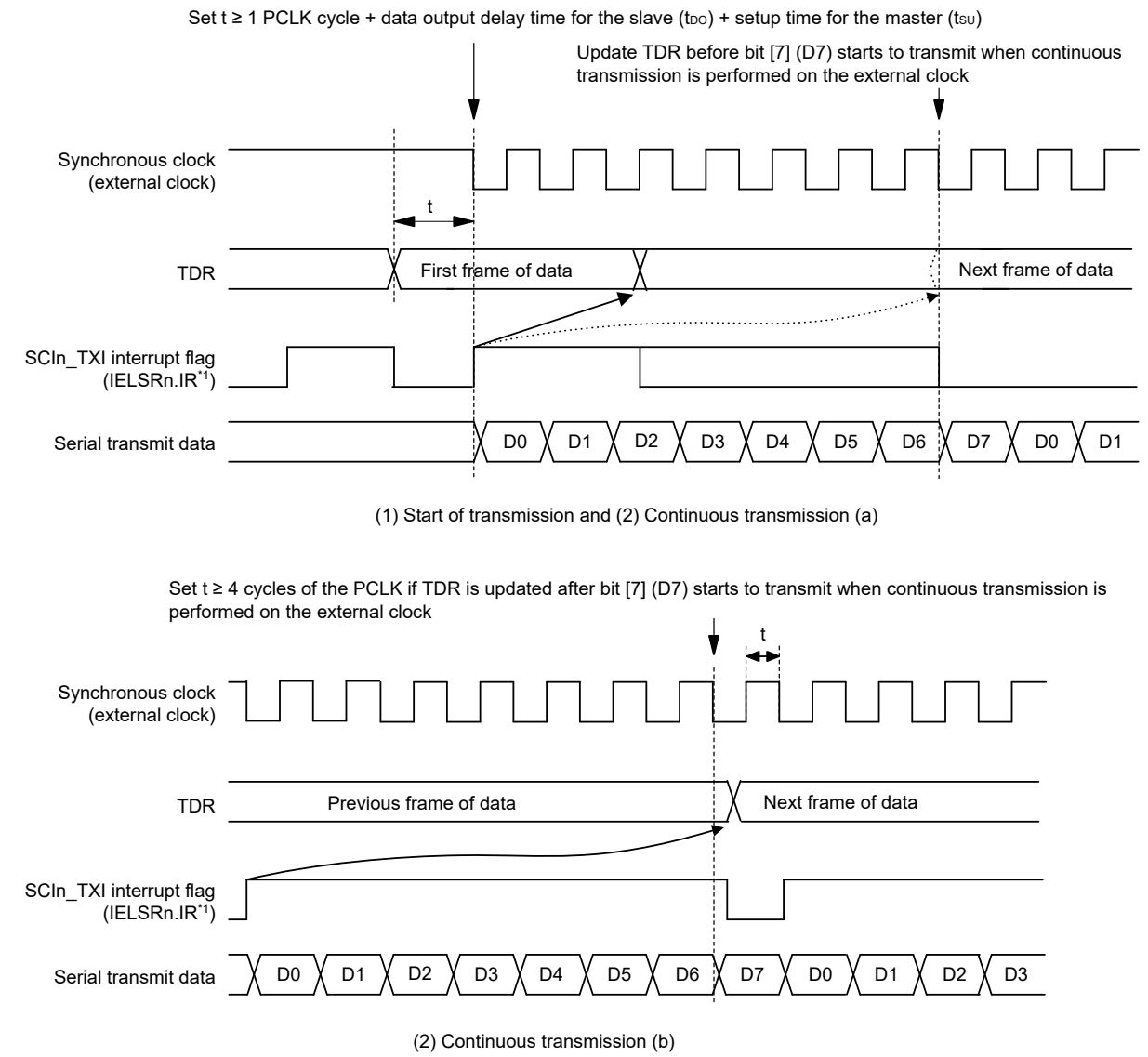

Note 1. See section 12, Interrupt Controller Unit (ICU) for information on the corresponding interrupt event number.

Figure 25.124 Restraints on use of external clock in clock synchronous transmission

25.16.7 Restrictions on Using DTC or DMAC

During transmission or reception operations using the DTC or DMAC, do not set transfer data for the DTC or DMAC.

(1) Writing data to TDR (FTDRHL)

Non-FIFO selected

Data can be written to TDR and TDRHL. However, if new data is written to TDR or TDRHL when transmit data remains in TDR or TDRHL, the previous data in TDR and TDRHL is lost because it was not transferred to TSR yet. When using DTC or DMAC, always write transmit data to TDR or TDRHL in the SCIn_TXI interrupt request handling routine.

FIFO selected

It is possible to write data to the FTDRH and FTDRL registers when SCR.TE is 1. Confirm the amount of writable data using the FDR.T[4:0] bits.

(2) Reading data from RDR (FRDRHL)

When using the DTC or DMAC to read RDR and RDRHL, always set the receive data full interrupt (SCIn_RXI) as the activation source of the relevant SCI.

25.16.8 Notes on Starting Transfer

At the point where transfer starts when the interrupt status flag (IELSRn.IR flag) in the ICU is 1, follow the procedure in this section to clear interrupt requests before permitting operations (by setting the SCR/SCR_SMCI.TE or SCR/SCR_SMCI.RE bit to 1). For details on the interrupt status flag, see section 12, Interrupt Controller Unit (ICU).

1. Confirm that transfer has stopped (the SCR/SCR_SMCI.TE or SCR/SCR_SMCI.RE bit is 0)
2. Set the associated interrupt enable bit (SCR/SCR_SMCI.TIE or SCR/SCR_SMCI.RIE bit) to 0
3. Read the associated interrupt enable bit (SCR/SCR_SMCI.TIE or SCR/SCR_SMCI.RIE bit) to check that it actually becomes 0
4. Set the interrupt status flag, IELSRn.IR, in the ICU to 0

25.16.9 External Clock Input in Clock Synchronous Mode and Simple SPI Mode

In clock synchronous mode and simple SPI mode, the external clock SCKn must be input as follows:

High-pulse period, low-pulse period = 2 PCLK cycles or more, period = 6 PCLK cycles or more.

25.16.10 Limitations on Simple SPI Mode

(1) Master mode

- Use a resistor to pull up or pull down the clock line matching the initial settings for the transfer clock set in the SPMR.CKPH and CKPOL bits when the SPMR.SSE bit is 1.

  This prevents the clock line from being placed in the high-impedance state when the SCR.TE bit is set to 0 or unexpected edges from being generated on the clock line when the SCR.TE bit changes from 0 to 1. When the SPMR.SSE bit is 0 in single master mode, pulling up or pulling down the clock line is not required because the clock line is not placed in the high-impedance state even when the SCR.TE bit is set to 0.
- For the clock delay setting (SPMR.CKPH bit is 1), the receive data full interrupt (SCIn_RXI) is generated before the final clock edge on the SCKn pin as indicated in Figure 25.125. If the TE and RE bits in the SCR register become 0 before the final edge of the clock signal on the SCKn pin, the SCKn pin is placed in the high-impedance state, so the width of the last clock pulse of the transfer clock is shortened. Additionally, an SCIn_RXI interrupt might lead to the input signal on the SSn pin of a connected slave going to the high level before the final edge of the clock signal on the SCKn pin, leading to incorrect operation of the slave.
- In a multi-master configuration, the SCKn pin output goes to high-impedance while the input on the SSn pin is at the low level if a mode fault error occurs while a character is being transferred, stopping supply of the clock signal to the connected slave. Reset the connected slave to avoid misaligned bits when transfer is restarted.

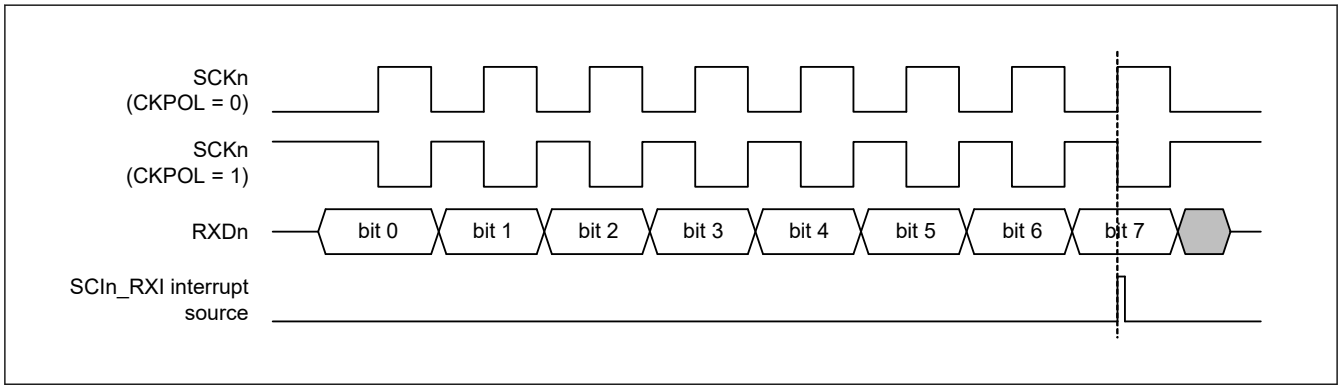

Figure 25.125 Timing of SCIn_RXI interrupt in simple SPI mode with clock delay

(2) Slave mode

- Wait at least the following time from writing transmit data in the TDR register to the start of the external clock input.

  1 PCLK cycle + data output delay for the slave (t_{DO}) + setup time for the master (t_{SU})

  Also wait at least 5 PCLK cycles from the input of the low level on the SSn pin to the start of the external clock input.
- Provide an external clock signal to the master the same as the data length for transfer
- Control the input on the SSn pin before the start and after the end of data transfer
- When the input level on the SSn pin is to be changed from low to high while a character is being transferred, set the TE and RE bits in the SCR register to 0 and, after restoring the settings, restart transfer of the first byte

25.16.11 Notes on Transmit Enable Bit (SCR.TE)

In initial register value, when SCR.TE = 0, the state of the TXDn pin is high impedance. The TXDn line should not be high impedance by the following one of ways.

1. The pull-up resistance is connected to the TXDn line.
2. Before setting the SCR.TE bit to 0, the function of the pin should be changed to a general-purpose output port. After that, set the SCR.TE bit to 1, and then change the function of the pin to TXDn.
3. In asynchronous mode, set SPTR and decided level of TXDn pin during SCR.TE = 0.

In the Simple SPI mode slave operation, the MISOn pin operates in the same way as the above TXDn pin. The MISOn pin, the same as TXDn pin, should not be high impedance by the above list number 1 or list number 2.

25.16.12 Limitation 1 on Usage of the Simple LIN Mode Control Section

When the PCR.SHARPS bit is set to 1, output on the TXDXn/RXDXn (n = 1) pin is only possible when the following conditions apply.

- The timer of the SCIn module is in Break Field low width output mode and the value of the TCR.TCST bit is 1 (when the TCST bit is set to 1, the high level continues to be output for up to one cycle of the clock source for counting by the timer counter before output of the low level)
- The value of the SCIn.SCR.TE bit is 1.

25.16.13 Limitation 2 on Usage of the Simple LIN Mode Control Section

SCIn_ERI, SCIn_RXI, SCIn_TXI and SCIn_TEI (n = 1) are generated even if the Simple LIN mode is enabled. However, these interrupts should not be used during reception of a Start Frame.

The two ways of dealing with this are described as follows.

1. Set the SCR.RIE bit of the SCIn to 0 to disable the output of interrupt requests. Check the error flags in the SSR register for SCIn on completion of the reception of a Start Frame, because an ERI interrupt is not generated if a receive error occurs. After reception of the Start Frame is completed, set the SCR.RIE bit of the SCIn to 1 by the time the first byte of the Information Frame is received.
2. Set the SCR.RIE bit of the SCIn to 1 to disable RXI interrupts and enable ERI interrupts for ICU.
   Clear the IRn.IR flag to enable the acceptance of RXI interrupts by ICU by the time the first byte of the Information Frame is received after the completion of Start Frame reception.
3. When a receive error is detected, clear the error flag of the SCIn and initialize the control section of the SCIn according to Figure 25.126.

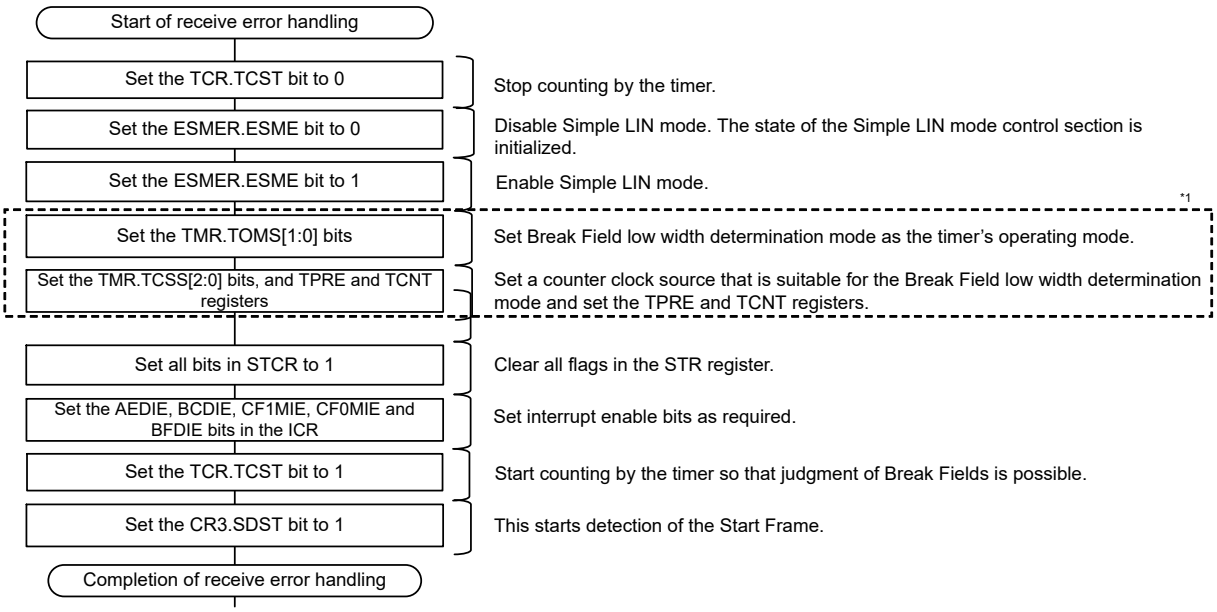

Note 1. The setting in this step is not necessary if the setting conditions have not been changed.

Figure 25.126 Example flowchart for receive error handling (during reception of the Start Frame)

25.16.14 Note on Stopping Reception When Using the RTS Function in Asynchronous Mode

One clock cycle of PCLK is required for the time from setting the SCR.RE bit to 0 to stopping the RTS signal generator in asynchronous mode.

When reading the RDR (or RDRHL) register after setting the SCR.RE bit to 0, confirm that the SCR.RE bit has been set to 0 before reading the RDR (or RDRHL) register to prevent these two processes from being performed consecutively.

26. IrDA Interface (IrDA)

26.1 Overview

The IrDA (Infrared Data Association) interface sends and receives IrDA data communication waveforms in association with SCI5 based on the IrDA standard 1.0.

Enabling the IrDA function by setting the IRE bit in the IRCR register allows encoding and decoding the TXD5 and RXD5 signals of SCI5 to the waveforms conforming to the IrDA standard 1.0 (IRTXD5 and IRRXD5 pins). Connecting the waveforms to an infrared transmitter/receiver implements infrared data communication that conforms to the IrDA standard 1.0 system.

With the IrDA standard 1.0 system, data transfer can be started at 9600 bps and the transfer rate can be changed whenever necessary. Because the IrDA interface cannot change the transfer rate automatically, the transfer rate should be changed through software.

Figure 26.1 shows the association between the IrDA interface and SCI5.

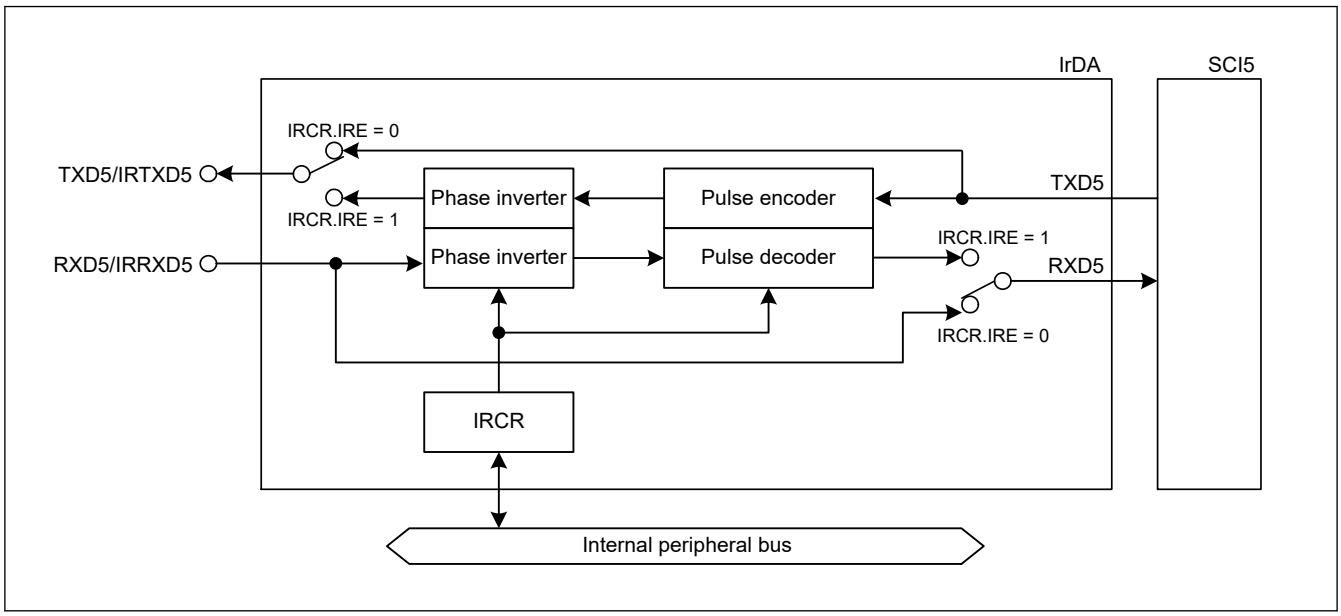

Figure 26.1 Association between the IrDA interface and SCI5

Table 26.1 IrDA I/O pins

Pin name	I/O	Description
IRTXD5	Output	Transmitted data
IRRXD5	Input	Received data

26.2 Register Descriptions

26.2.1 IRCR : IrDA Control Register

Base address: SCI5 = 0x4011_8500

Offset address: 0xA00

Bit position:	7	6	5	4	3	2	1	0
Bit field:	IRE	—	—	—	IRTXINV	IRRXINV	—	—
Value after reset:	0	0	0	0	0	0	0	0

Bit	Symbol	Function	R/W
1:0	—	These bits are read as 0. The write value should be 0.	R/W
2	IRRXINV	IRRXD Polarity Switching 0: Use input from IRRXD pin as received data as is 1: Use input from IRRXD pin as received data after the polarity is inverted	R/W
3	IRTXINV	IRTXD Polarity Switching 0: Output transmitted data to IRTXD pin as is 1: Output transmitted data to IRTXD pin after the polarity is inverted	R/W
6:4	—	These bits are read as 0. The write value should be 0.	R/W
7	IRE	IrDA Enable 0: Use serial input/output pins for normal serial communication 1: Use serial input/output pins for IrDA data communication	R/W

IRRXINV bit (IRRXD Polarity Switching)

The IRRXINV bit inverts the logic level of the input from IRRXD pin.

IRTXINV bit (IRTXD Polarity Switching)

The IRTXINV bit inverts the logic level of the output to IRTXD pin.

IRE bit (IrDA Enable)

The IRE bit configures the I/O pins for normal communication mode or IrDA data communication mode.

26.3 Operation

26.3.1 IrDA Interface Setup Procedure

Use the following procedure to set up the IrDA interface for operation:

1. Set the associated pins to IRTXD5 and IRRXD5 in the Port mn Pin Function Select Register (PmnPFS.PSEL[4:0] = 00101b) of the I/O port function.
2. Specify the peripheral function in the Port mn Pin Function Select Register (PmnPFS.PMR = 1) of the I/O port function.
3. Specify the IrDA function in the IRCR register.
4. Set the SCI5-related registers of the Serial Communications Interface (SCI).

26.3.2 Transmission

During transmission, the signals output from the SCI5 (UART frames) are converted to the IR frame data through the IrDA interface, see Figure 26.2. When the IRCR.IRTXINV bit is 0 and serial data is 0, high-level pulses with 3/16 the width of the bit cycle (1-bit width period) are output (initial setting). The IrDA standard requires that the minimum high-level pulse width must be 1.41 µs. When the serial data is 1, no pulses are output.

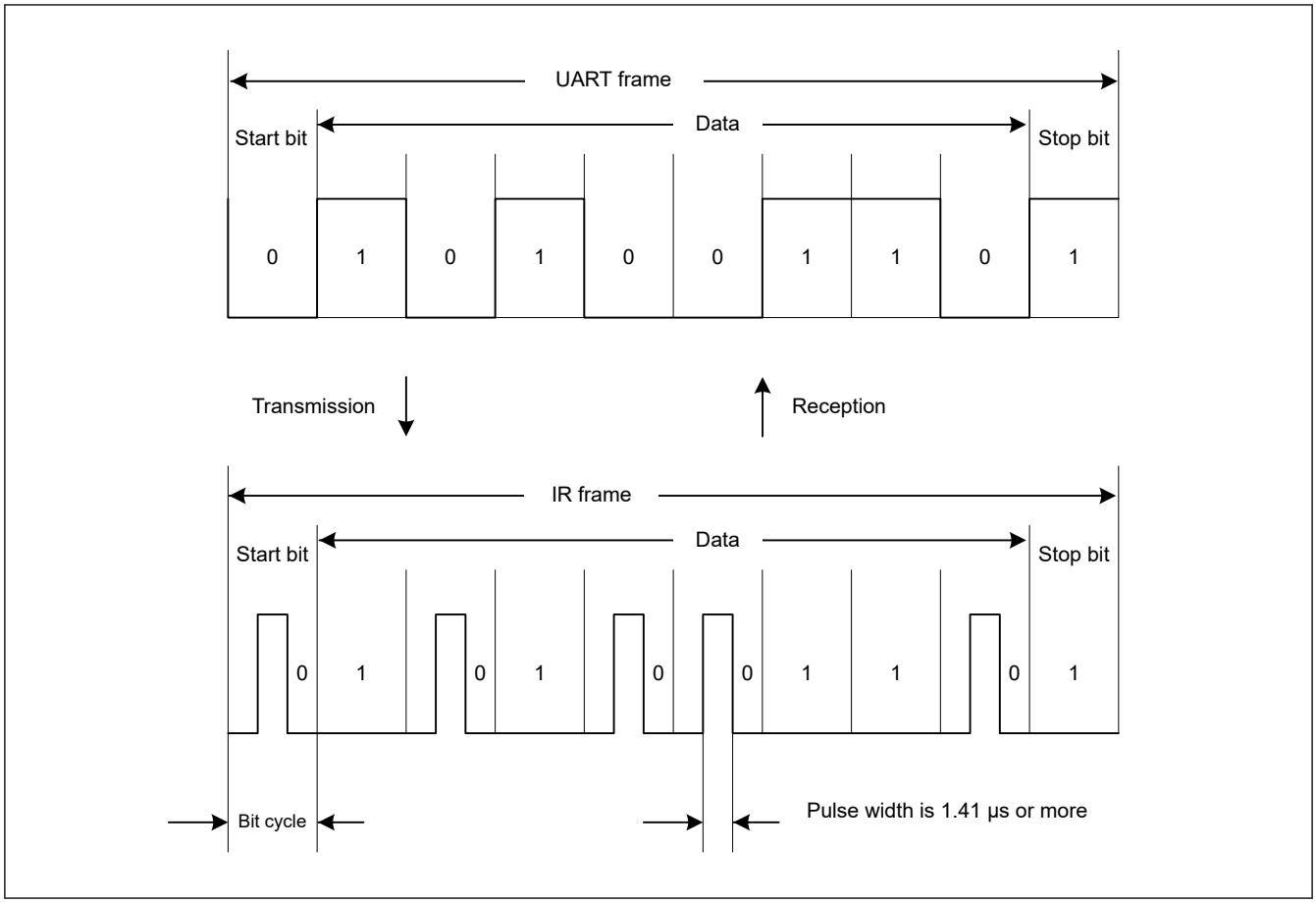

Figure 26.2 Transmission and reception through the IrDA interface

26.3.3 Reception

During reception, the IR frame data is converted to the UART frame data through the IrDA interface and is input to the SCI5. Low-level data is input to the SCI5 when the IRCR.IRRXINV bit is 0 and a high-level pulse is detected. High-level data is input to the SCI5 when no pulse is detected for a 1-bit period.

26.4 Usage Notes

26.4.1 Settings for the Module-Stop Function

The Module Stop Control Register B (MSTPCRB) can enable or disable IrDA operation. The IrDA is initially stopped after reset. Releasing the module-stop state enables access to the registers. For details, see section 10, Low Power Modes.

26.4.2 Asynchronous Reference Clock for SCI5

The IrDA receives a clock with frequency 16 times the bit rate from the SCI5 and operates in conjunction with the SCI5. When using the IrDA, set the SCI5.SEMR.ABCSE, SCI5.SEMR.ABCS, and SCI5.SEMR.BGDM bits to 0.

27. I^{2}C Bus Interface (IIC)

27.1 Overview

The I^{2}C bus interface (IIC) has 2 channels. The IIC module conforms with and provides a subset of the NXP I^{2}C (Inter-Integrated Circuit) bus interface functions.

Table 27.1 lists the IIC specifications, Figure 27.1 shows a block diagram, and Figure 27.2 shows an example of I/O pin connections to external circuits, with an I^{2}C bus configuration. Table 27.2 lists the I/O pins.

Table 27.1 IIC specifications (1 of 2)

Parameter	Specifications
Communications format	• I^{2}C-bus format or SMBus format • Master or slave mode selectable • Automatic securing of the setup times, hold times, and bus-free times for the transfer rate
Transfer rate	• Fast-mode Plus supported, up to 1 Mbps
SCL clock	For master operation, the duty cycle of the SCL clock is selectable in the range from 4% to 96%
Issuing and detecting conditions	• Start, restart, and stop conditions are automatically generated • Start conditions (including restart conditions) and stop conditions are detectable
Slave address	• Configurable for up to three different slave addresses • 7- and 10-bit address formats supported, including simultaneous use • General call addresses, device ID addresses, and SMBus host addresses detectable
Acknowledgment	• For transmission, automatic loading of the acknowledge bit Transfer of the next transmit data can be automatically suspended on detection of a not-acknowledge bit. • For reception, automatic transmission of the acknowledge bit If a wait between the 8th and 9th clock cycles is selected, the software can control the value in the acknowledge field in response to the received value.
Wait function	During reception, the following wait periods are available by holding the SCL clock low: • Waiting between the eighth and ninth clock cycles • Waiting between the ninth clock cycle and the 1st clock cycle of the next transfer
SDA output delay function	Output timing of transmitted data, including the acknowledge bit, can be delayed
Arbitration	• For multi-master operation: – SCL clock synchronization is possible when conflict occurs with the SCL signal from another master – When issuing the start condition creates conflict on the bus, loss of arbitration is detected by testing for a mismatch between the internal signal for the SDA line and the level on the SDA line – In master operation, loss of arbitration is detected by testing for non-matching between the signal on the SDA line and the internal signal for the SDA line • Loss of arbitration because the start condition occurs while the bus is busy is detectable, to prevent the issuing of double start conditions • Loss of arbitration is detectable on transfer of a not-acknowledge bit because the internal signal for the SDA line and the level on the SDA line do not match • Loss of arbitration because a mismatch of internal and line levels for data is detectable in slave transmission
Timeout function	Internal detection of long-interval stops of the SCL clock
Noise cancellation	• Digital noise filters for both the SCL and SDA signals • Programmable window for noise cancellation by the filters
Interrupt sources	• Transfer error or event occurrence (arbitration-lost, NACK, timeout, start or restart condition, or stop condition) • Receive data full, including matching with a slave address • Transmit data empty, including matching with a slave address • Transmit end
Module-stop function	Module-stop state can be set
IIC operating modes	• Master transmit • Master receive • Slave transmit • Slave receive

Table 27.1 IIC specifications (2 of 2)

Parameter	Specifications
Event link function (output)	● Transfer error or event occurrence (arbitration-lost, NACK, timeout, start or restart condition, or stop condition) ● Receive data full, including matching with a slave address ● Transmit data empty, including matching with a slave address ● Transmit end
Wakeup function*1	CPU can return from Software Standby mode using a wakeup event
TrustZone Filter	Security attribution can be set for each channels

Note 1. This function is only available for IIC channel IIC0. IIC1 is not supported.

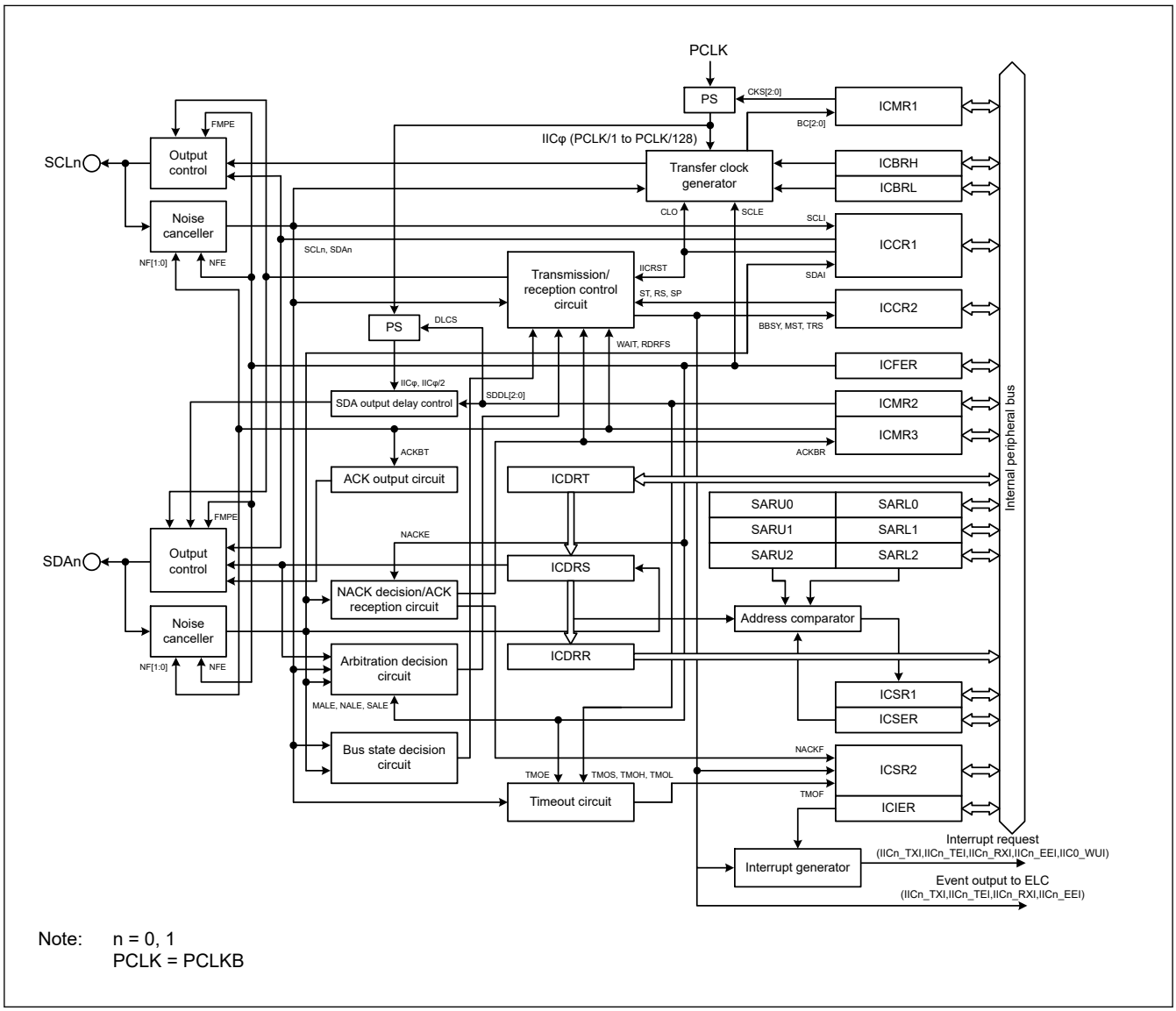

Note: n = 0, 1
PCLK = PCLKB

Figure 27.1 IIC block diagram

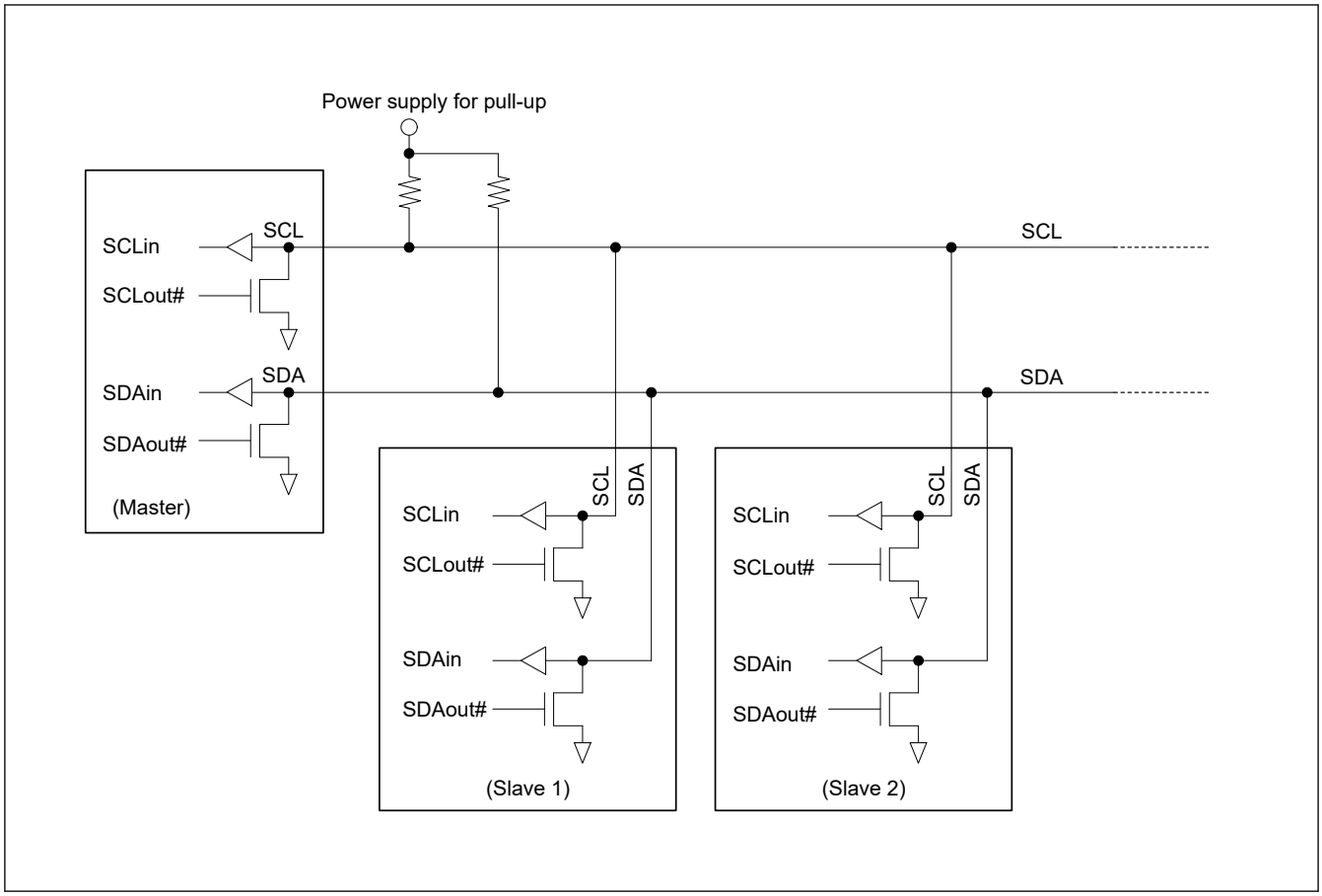

Figure 27.2 I/O pin connection to an external circuit (I²C bus configuration example)

The input level of the signals for IIC is CMOS when I²C bus is selected (ICMR3.SMBS = 0), or TTL when SMBus is selected (ICMR3.SMBS = 1).

Table 27.2 IIC I/O pins

Channel	Pin name	I/O	Function
IICn	SCLn	I/O	IICn serial clock I/O pin
	SDAn	I/O	IICn serial data I/O pin

Note: n = 0, 1

27.2 Register Descriptions

27.2.1 ICCR1 : I²C Bus Control Register 1

Base address: IICn = 0x4009_F000 + 0x0100 × n (n = 0, 1)

Offset address: 0x00

Bit position:	7	6	5	4	3	2	1	0
Bit field:	ICE	IICRST	CLO	SOWP	SCLO	SDAO	SCLI	SDAI
Value after reset:	0	0	0	1	1	1	1	1

Bit	Symbol	Function	R/W
0	SDAI	SDA Line Monitor 0: SDAn line is low 1: SDAn line is high	R

Bit	Symbol	Function	R/W
1	SCLI	SCL Line Monitor 0: SCLn line is low 1: SCLn line is high	R
2	SDAO	SDA Output Control/Monitor 0: Read: IIC drives SDAn pin low Write: IIC drives SDAn pin low 1: Read: IIC releases SDAn pin Write: IIC releases SDAn pin	R/W
3	SCLO	SCL Output Control/Monitor Use an external pull-up resistor to drive the signal high. 0: Read: IIC drives SCLn pin low Write: IIC drives SCLn pin low 1: Read: IIC releases SCLn pin Write: IIC releases SCLn pin	R/W
4	SOWP	SCLO/SDAO Write Protect This bit is read as 1. 0: Write enable SCLO and SDAO bits 1: Write protect SCLO and SDAO bits	W
5	CLO	Extra SCL Clock Cycle Output This bit clears automatically after 1 clock cycle is output. 0: Do not output extra SCL clock cycle (default) 1: Output extra SCL clock cycle	R/W
6	IICRST	I^{2}C Bus Interface Internal Reset This setting clears the bit counter and the SCLn/SDAn output latch. 0: Release IIC reset or internal reset 1: Initiate IIC reset or internal reset	R/W
7	ICE	I^{2}C Bus Interface Enable Used in combination with the IICRST bit to select either IIC or internal reset. 0: Disable (SCLn and SDAn pins in inactive state) 1: Enable (SCLn and SDAn pins in active state)	R/W

SDAO bit (SDA Output Control/Monitor) and SCLO bit (SCL Output Control/Monitor)

The SDAO and SCLO bits directly control the SDAn and SCLn signals output from the IIC. When writing to these bits, also write 0 to the SOWP bit. Setting these bits results in input to the IIC by the input buffer. When slave mode is selected, a start condition might be detected and the bus might be released, depending on the bit settings.

Do not rewrite these bits during a start condition, stop condition, restart condition, transmission, or reception. Operation after rewriting under these conditions is not guaranteed. When reading these bits, the state of signals output from the IIC can be read.

CLO bit (Extra SCL Clock Cycle Output)

The CLO bit allows output of an extra SCL clock cycle for debugging or error processing. Normally, set this bit to 0. Setting the bit to 1 in a normal communication state causes a communication error. For details on this function, see section 27.12.2. Extra SCL Clock Cycle Output Function.

IICRST bit (I^{2}C Bus Interface Internal Reset)

The IICRST bit initiates an internal state reset of the IIC. Setting this bit to 1 initiates an IIC reset or internal reset. Whether an IIC reset or internal reset is initiated is determined by the settings of this bit in combination with the ICE bit. Table 27.3 lists the IIC resets.

The IIC reset initializes all registers except ICCR1.ICE and ICCR1.IICRST bits and internal states of the IIC. In addition to the internal states of the IIC, the internal reset initializes the following:

- Bit counter (ICMR1.BC[2:0] bits)
- I^{2}C Bus Shift Register (ICDRS)
- I^{2}C Bus Status Registers (ICSR1 and ICSR2)
- SDAO and SCLO Output Control/Monitor (ICCR1.SDAO and ICCR1.SCLO bits)

- I²C Bus Control Register 2 (except ICCR2.BBSY bit)

For the reset conditions for each register, see section 27.15. State of Registers When Issuing Each Condition.

An internal reset initiated with the IICRST bit set to 1 during operation (with the ICE bit set to 1) resets the internal states of the IIC without initializing the port settings and the control and setting registers of the IIC. If the IIC hangs in a low-level output state, resetting the internal states cancels the low-level output state and releases the bus with the SCLn pin and SDAn pin at high impedance.

Note: If an internal reset is initiated using the IICRST bit for a bus hang-up that occurs during communication with the master device in slave mode, the slave and master devices might enter different states, because the bit counter information differs. For this reason, do not initiate an internal reset in slave mode. Initiate recovery processing from the master device. If an internal reset is required because the IIC hangs with the SCLn line in a low-level output state in slave mode, initiate an internal reset, then issue a restart condition from the master device, or issue a stop condition and resume communication from the start condition. If communication is restarted by initiating a reset solely in the slave device without issuing a start or restart condition from the master device, synchronization is lost because the master and slave devices operate asynchronously.

Table 27.3 IIC resets

IICRST	ICE	State	Specifications
1	0	IIC reset	Resets all registers except ICCR1.IICRST and ICCR1.ICE bits, and the internal states of the IIC
	1	Internal reset	Reset the following: ● ICMR1.BC[2:0] bits ● ICSR1, ICSR2, ICDRS registers ● SDAO and SCLO Output Control/Monitor (ICCR1.SDAO and ICCR1.SCLO bits) ● I²C Bus Control Register 2 (except ICCR2.BBSY bit) ● Internal states of the IIC

ICE bit (I²C Bus Interface Enable)

The ICE bit selects the active or inactive state of the SCLn and SDAn pins. It can also be combined with the IICRST bit to initiate two types of resets. See Table 27.3 for the reset descriptions.

Set the ICE bit to 1 when using the IIC. The SCLn and SDAn pins are placed in the active state when the ICE bit is set to 1. Set the ICE bit to 0 when the IIC is not used. The SCLn and SDAn pins are placed in the inactive state when the ICE bit is set to 0. Do not assign the SCLn or SDAn pin to the IIC when setting up the pin function control. Slave address comparison is performed if the pins are assigned to the IIC.

27.2.2 ICCR2 : I²C Bus Control Register 2

Base address: IICn = 0x4009_F000 + 0x0100 × n (n = 0, 1)

Offset address: 0x01

Bit position:	7	6	5	4	3	2	1	0
Bit field:	BBSY	MST	TRS	—	SP	RS	ST	—
Value after reset:	0	0	0	0	0	0	0	0

Bit	Symbol	Function	R/W
0	—	This bit is read as 0. The write value should be 0.	R/W
1	ST	Start Condition Issuance Request 0: Do not issue a start condition request 1: Issue a start condition request	R/W
2	RS	Restart Condition Issuance Request 0: Do not issue a restart condition request 1: Issue a restart condition request	R/W

Bit	Symbol	Function	R/W
3	SP	Stop Condition Issuance Request 0: Do not issue a stop condition request 1: Issue a stop condition request	R/W
4	—	This bit is read as 0. The write value should be 0.	R/W
5	TRS	Transmit/Receive Mode 0: Receive mode 1: Transmit mode	R/W*1
6	MST	Master/Slave Mode 0: Slave mode 1: Master mode	R/W*1
7	BBSY	Bus Busy Detection Flag 0: I^2C bus released (bus free state) 1: I^2C bus occupied (bus busy state)	R

Note 1. The MST and TRS bits can be written to when the ICMR1.MTWP bit is set to 1.

ST bit (Start Condition Issuance Request)

The ST bit requests transition to master mode and triggers a start condition. When this bit is set to 1, a start condition is issued when the BBSY flag is set to 0 (bus free state). For details on this function, see section 27.11. Start, Restart, and Stop Condition Issuing Function.

[Setting condition]

- When 1 is written to the ST bit.

[Clearing conditions]

- When 0 is written to the ST bit
- When a start condition is issued (a start condition is detected)
- When the AL (arbitration-lost) flag in ICSR2 is set to 1
- When 1 is written to the IICRST bit in ICCR1 to apply an IIC reset or an internal reset.

Note: Only set the ST bit to 1 (start condition request) when the BBSY flag is set to 0 (bus free state). Arbitration might be lost if the ST bit is set to 1 (start condition request) when the BBSY flag is 1 (bus busy state).

RS bit (Restart Condition Issuance Request)

The RS bit requests that a restart condition be issued in master mode. When this bit is set to 1 to request a restart condition, a restart condition is issued when the BBSY flag is set to 1 (bus busy state) and the MST bit is set to 1 (master mode). For details on this function, see section 27.11. Start, Restart, and Stop Condition Issuing Function.

[Setting condition]

- When 1 is written to the RS bit with the BBSY flag in ICCR2 set to 1.

[Clearing conditions]

- When 0 is written to the RS bit
- When a restart condition is issued (a start condition is detected)
- When the AL (arbitration-lost) flag in ICSR2 is set to 1
- When 1 is written to the IICRST bit in ICCR1 to apply an IIC reset or an internal reset.

Note: Do not set the RS bit to 1 while issuing a stop condition.
Note: If 1 (restart condition request) is written to the RS bit in slave mode, the restart condition is not issued, but the RS bit remains set to 1. If the operating mode changes to master mode without the bit being cleared, a restart condition might be issued.

SP bit (Stop Condition Issuance Request)

The SP bit requests that a stop condition be issued in master mode. When this bit is set to 1, a stop condition is issued when the BBSY flag is set to 1 (bus busy state) and the MST bit is set to 1 (master mode). For details on this function, see section 27.11. Start, Restart, and Stop Condition Issuing Function.

[Setting condition]

- When 1 is written to the SP bit with both the BBSY flag and the MST bit in ICCR2 set to 1.

[Clearing conditions]

- When 0 is written to the SP bit
- When a stop condition is issued (a stop condition is detected)
- When the AL (arbitration-lost) flag in ICSR2 is set to 1
- When a start condition and a restart condition are detected
- When 1 is written to the IICRST bit in ICCR1 to apply an IIC reset or an internal reset.

Note: Writing to the SP bit is not possible while the BBSY flag is 0 (bus free state).
Note: Do not set the SP bit to 1 while a restart condition is being issued.

TRS bit (Transmit/Receive Mode)

The TRS bit indicates transmit or receive mode. The IIC is in receive mode when the TRS bit is 0 and in transmit mode when the bit is 1. The combination of this bit and the MST bit indicates the IIC operating mode.

The value of the TRS bit automatically changes to 1 for transmit mode or 0 for receive mode when a start condition is issued or detected and the R/W# bit is set. Although writing to the TRS bit is possible when the MTWP bit in ICMR1 is set to 1, writing to this bit is not required during normal usage.

[Setting conditions]

- When a start condition is issued normally because of a start condition request (when a start condition is detected with the ST bit set to 1)
- When a restart condition is issued normally because of a restart condition request (when a restart condition is detected with the RS bit set to 1)
- When the R/W# bit appended to the slave address is set to 0 in master mode
- When the address received in slave mode matches the address enabled in ICSER, with the R/W# bit set to 1
- When 1 is written to the TRS bit with the MTWP bit in ICMR1 set to 1.

[Clearing conditions]

- When a stop condition is detected
- When the AL (arbitration-lost) flag in ICSR2 is set to 1
- When the R/W# bit appended to the slave address is set to 1 in master mode
- In slave mode, on a match between the received address and the address enabled in ICSER when the value of the received R/W# bit is 0, including when the received address is the general call address
- In slave mode, when a restart condition is detected (a restart condition is detected with ICCR2.BBSY = 1 and ICCR2.MST = 0)
- When 0 is written to the TRS bit with the MTWP bit in ICMR1 set to 1
- When 1 is written to the IICRST bit in ICCR1 to apply an IIC reset or an internal reset.

MST bit (Master/Slave Mode)

The MST bit indicates master or slave mode. The IIC is in slave mode when the MST bit is 0 and is in master mode when the bit is 1. The combination of this bit and the TRS bit indicates the IIC operating mode.

The value of the MST bit automatically changes to 1 for master mode or 0 for slave mode when a start condition is issued or a stop condition is issued or detected. Although writing to the MST bit is possible when the MTWP bit in ICMR1 is set to 1, writing to this bit is not required during normal usage.

[Setting conditions]

- When a start condition is issued normally because of a start condition request (when a start condition is detected with the ST bit set to 1)
- When 1 is written to the MST bit with the MTWP bit in ICMR1 set to 1.

[Clearing conditions]

- When a stop condition is detected
- When the AL (arbitration-lost) flag in ICSR2 is set to 1
- When 0 is written to the MST bit with the MTWP bit in ICMR1 set to 1
- When 1 is written to the IICRST bit in ICCR1 to apply an IIC reset or an internal reset.

BBSY flag (Bus Busy Detection Flag)

The BBSY flag indicates whether the I^2C bus is occupied (bus busy state) or released (bus free state). The flag is set to 1 when the SDAn line changes from high to low when the SCLn line is high, assuming that a start condition was issued. The flag is set to 0 if a start condition is not detected for the bus free time (ICBRL setting), assuming that a stop condition was issued.

[Setting condition]

- When a start condition is detected.

[Clearing conditions]

- When a start condition is not detected for the bus free time (ICBRL setting) after detecting a stop condition
- When 1 is written to the IICRST bit in ICCR1 with the ICE bit in ICCR1 set to 0 (IIC reset).

27.2.3 ICMR1 : I^2C Bus Mode Register 1

Base address: IICn = 0x4009_F000 + 0x0100 × n (n = 0, 1)

Offset address: 0x02

Bit position:	7	6	5	4	3	2	1	0
Bit field:	MTWP	CKS[2:0]			BCWP	BC[2:0]		
Value after reset:	0	0	0	0	1	0	0	0

Bit	Symbol	Function	R/W
2:0	BC[2:0]	Bit Counter 0 0 0: 9 bits 0 0 1: 2 bits 0 1 0: 3 bits 0 1 1: 4 bits 1 0 0: 5 bits 1 0 1: 6 bits 1 1 0: 7 bits 1 1 1: 8 bits	R/W*1
3	BCWP	BC Write Protect This bit is read as 1. 0: Write enable BC[2:0] bits 1: Write protect BC[2:0] bits	W*1
6:4	CKS[2:0]	Internal Reference Clock Select Select the internal reference clock source (IICφ) for the IIC. IICφ = (PCLKB / $2^{CKS[2:0]}$) clock	R/W
7	MTWP	MST/TRS Write Protect 0: Write protect MST and TRS bits in ICCR2 1: Write enable MST and TRS bits in ICCR2	R/W

Note 1. Rewrite the BC[2:0] bits and set the BCWP bit to 0 at the same time.

BC[2:0] bits (Bit Counter)

The BC[2:0] bits function as a counter indicating the number of bits remaining to be transferred on detection of a rising edge on the SCLn line. Although BC[2:0] are read/write bits, it is not required to access these bits under normal conditions.

To write to these bits, specify the number of bits to be transferred plus one, for an additional acknowledge bit, between transferred frames when the SCLn line is at a low level. The value in the BC[2:0] bits returns to 000b at the end of a data transfer, including the acknowledge bit, or when a start or restart condition is detected.

27.2.4 ICMR2 : I²C Bus Mode Register 2

Base address: IICn = 0x4009_F000 + 0x0100 × n (n = 0, 1)

Offset address: 0x03

Bit position:	7	6	5	4	3	2	1	0
Bit field:	DLCS	SDDL[2:0]			—	TMOH	TMOL	TMOS
Value after reset:	0	0	0	0	0	1	1	0

Bit	Symbol	Function	R/W
0	TMOS	Timeout Detection Time Select 0: Select long mode 1: Select short mode	R/W
1	TMOL	Timeout L Count Control 0: Disable count while SCLn line is low 1: Enable count while SCLn line is low	R/W
2	TMOH	Timeout H Count Control 0: Disable count while SCLn line is high 1: Enable count while SCLn line is high	R/W
3	—	This bit is read as 0. The write value should be 0.	R/W
6:4	SDDL[2:0]	SDA Output Delay Counter 0 0 0: No output delay 0 0 1: 1 IICφ cycle (When ICMR2.DLCS = 0 (IICφ)) 1 or 2 IICφ cycles (When ICMR2.DLCS = 1 (IICφ/2)) 0 1 0: 2 IICφ cycles (When ICMR2.DLCS = 0 (IICφ)) 3 or 4 IICφ cycles (When ICMR2.DLCS = 1 (IICφ/2)) 0 1 1: 3 IICφ cycles (When ICMR2.DLCS = 0 (IICφ)) 5 or 6 IICφ cycles (When ICMR2.DLCS = 1 (IICφ/2)) 1 0 0: 4 IICφ cycles (When ICMR2.DLCS = 0 (IICφ)) 7 or 8 IICφ cycles (When ICMR2.DLCS = 1 (IICφ/2)) 1 0 1: 5 IICφ cycles (When ICMR2.DLCS = 0 (IICφ)) 9 or 10 IICφ cycles (When ICMR2.DLCS = 1 (IICφ/2)) 1 1 0: 6 IICφ cycles (When ICMR2.DLCS = 0 (IICφ)) 11 or 12 IICφ cycles (When ICMR2.DLCS = 1 (IICφ/2)) 1 1 1: 7 IICφ cycles (When ICMR2.DLCS = 0 (IICφ)) 13 or 14 IICφ cycles (When ICMR2.DLCS = 1 (IICφ/2))	R/W
7	DLCS	SDA Output Delay Clock Source Select 0: Select internal reference clock (IICφ) as the clock source for SDA output delay counter 1: Select internal reference clock divided by 2 (IICφ/2) as the clock source for SDA output delay counter*1	R/W

Note 1. The setting DLCS = 1 (IICφ/2) is only valid when SCL is low. When SCL is high, the DLCS = 1 setting becomes invalid and the clock source becomes the internal reference clock (IICφ).

TMOS bit (Timeout Detection Time Select)

The TMOS bit selects long or short mode for the timeout detection time when the timeout function is enabled (ICFER.TMOE = 1). When this bit is set to 0, long mode is selected. When it is set to 1, short mode is selected. In long mode, the timeout detection internal counter functions as a 16 bit-counter. In short mode, the counter functions as a 14- bit counter. While the SCLn line is in the state that enables this counter as specified in the TMOH and TMOL bits, the counter counts up in synchronization with the internal reference clock (IICφ) as a count source. For details on this function, see section 27.12.1. Timeout Function.

TMOL bit (Timeout L Count Control)

The TMOL bit enables or disables up-counting on the internal counter of the timeout function while the SCLn line is held low and the timeout function is enabled (ICFER.TMOE = 1).

TMOH bit (Timeout H Count Control)

The TMOH bit enables or disables up-counting on the internal counter of the timeout function while the SCLn line is held high and the timeout function is enabled (ICFER.TMOE = 1).

SDDL[2:0] bits (SDA Output Delay Counter)

The SDDL[2:0] bits can be used to delay the SDA output. This counter works with the clock source selected in the DLCS bit. This setting can be used for all types of SDA output, including transmission of the acknowledge bit.

Set the SDA output delay to meet the I^{2}C bus standard for the data enable time/acknowledge enable time,[*1] or the SMBus standard, within [data hold time (300 ns or more + the SCL clock low-level period) - the data setup time (250 ns)]. If a value outside the standard is set, communication between devices might malfunction or falsely indicate a start or stop condition, depending on the bus state.

For details on this function, see section 27.5. SDA Output Delay Function.

Note 1. Data enable time/acknowledge enable time.
3,450 ns for up to 100 kbps: Standard mode (Sm)
900 ns for up to 400 kbps: Fast mode (Fm)
450 ns for up to 1 Mbps: Fast-mode Plus (Fm+)

27.2.5 ICMR3 : I^{2}C Bus Mode Register 3

Base address: IICn = 0x4009_F000 + 0x0100 × n (n = 0, 1)

Offset address: 0x04

Bit position:	7	6	5	4	3	2	1	0
Bit field:	SMBS	WAIT	RDRFS	ACKWP	ACKBT	ACKBR	NF[1:0]	
Value after reset:	0	0	0	0	0	0	0	0

Bit	Symbol	Function	R/W
1:0	NF[1:0]	Noise Filter Stage Select 0 0: Filter out noise of up to 1 IICφ cycle (single-stage filter) 0 1: Filter out noise of up to 2 IICφ cycles (2-stage filter) 1 0: Filter out noise of up to 3 IICφ cycles (3-stage filter) 1 1: Filter out noise of up to 4 IICφ cycles (4-stage filter)	R/W
2	ACKBR	Receive Acknowledge 0: 0 received as the acknowledge bit (ACK reception) 1: 1 received as the acknowledge bit (NACK reception)	R
3	ACKBT	Transmit Acknowledge 0: Send 0 as the acknowledge bit (ACK transmission) 1: Send 1 as the acknowledge bit (NACK transmission)	R/W[*1]
4	ACKWP	ACKBT Write Protect 0: Write protect ACKBT bit 1: Write enable ACKBT bit	R/W
5	RDRFS	RDRF Flag Set Timing Select Low-hold is released by writing to ACKBT. 0: Set the RDRF flag on the rising edge of the 9th SCL clock cycle. The SCLn line is not held low on the falling edge of the 8th clock cycle. 1: Set the RDRF flag on the rising edge of the 8th SCL clock cycle. The SCLn line is held low on the falling edge of the 8th clock cycle.	R/W[*2]

Bit	Symbol	Function	R/W
6	WAIT	Low-hold is released by reading ICDRR. 0: No wait (The SCLn line is not held low during the period between the 9th clock cycle and the 1st clock cycle.) 1: Wait (The SCLn line is held low during the period between the 9th clock cycle and the 1st clock cycle.)	R/W*2
7	SMBS	SMBus/I2C Bus Select 0: Select I2C Bus 1: Select SMBus	R/W

Note 1. Write to the ACKBT bit only while the ACKWP bit is already 1. If the application writes 1 to the ACKWP and ACKBT bits at the same time, the ACKBT bit is not set to 1.
Note 2. The WAIT and RDRFS bits are only valid in receive mode (invalid in transmit mode).

NF[1:0] bits (Noise Filter Stage Select)

The NF[1:0] bits select the number of stages in the digital noise filter. For details on this function, see section 27.6. Digital Noise Filter Circuits

Note: Set the noise range to be filtered within a range less than the SCLn line high- or low-level period. If the noise range is set to a value of [SCL clock width: high- or low-level period, whichever is shorter] - [1.5 internal reference clock (IICφ) cycles + analog noise filter: 120 ns (reference values)] or more, the SCL clock is regarded as noise, which might prevent the IIC from operating normally.

ACKBR bit (Receive Acknowledge)

The ACKBR bit stores the acknowledge bit information received from the receive device in transmit mode.

[Setting condition]

- When 1 is received as the acknowledge bit with the TRS bit in ICCR2 set to 1.

[Clearing conditions]

- When 0 is received as the acknowledge bit with the TRS bit in ICCR2 set to 1
- When 1 is written to the IICRST bit in ICCR1 while the ICE bit in ICCR1 is 0 (IIC reset).

ACKBT bit (Transmit Acknowledge)

The ACKBT bit sets the acknowledge bit to be sent in receive mode

[Setting condition]

- When 1 is written to this bit with the ACKWP bit set to 1.

[Clearing conditions]

- When 0 is written to this bit with the ACKWP bit set to 1
- When stop condition request is detected with the SP bit in ICCR2 set to 1
- When 1 is written to the IICRST bit in ICCR1 while the ICE bit in ICCR1 is 0 (IIC reset).

ACKWP bit (ACKBT Write Protect)

The ACKWP bit controls write enabling of the ACKBT bit.

RDRFS bit (RDRF Flag Set Timing Select)

The RDRFS bit selects the RDRF flag set timing in receive mode and also selects whether to hold the SCLn line low on the falling edge of the 8th SCL clock cycle.

When the RDRFS bit is 0, the SCLn line is not held low on the falling edge of the 8th SCL clock cycle, and the RDRF flag is set to 1 on the rising edge of the 9th SCL clock cycle.

When the RDRFS bit is 1, the RDRF flag is set to 1 on the rising edge of the 8th SCL clock cycle, and the SCLn line is held low on the falling edge of the 8th SCL clock cycle. The low-hold of the SCLn line is released by a write to the ACKBT bit.

After data is received with this setting, the SCLn line is automatically held low before the acknowledge bit is sent. This enables processing to send ACK (ACKBT = 0) or NACK (ACKBT = 1), based on the receive data.

WAIT bit (WAIT)

The WAIT bit controls whether to force a low-hold between the ninth SCL clock cycle and the first SCL clock cycle, until the receive data buffer (ICDRR) is completely read each time single-byte data is received in receive mode.

When the WAIT bit is 0, the receive operation continues without a low-hold between the ninth and the first SCL clock cycle. When both the RDRFS and WAIT bits are 0, continuous receive operation is enabled with the double buffer.

When the WAIT bit is 1, the SCLn line is held low from the falling edge of the ninth clock cycle until the ICDRR value is read each time single-byte data is received. This enables receive operation in byte units.

Note: When the value of the WAIT bit is to be read, always read ICDRR first.

SMBS bit (SMBus/I^{2}C Bus Select)

Setting the SMBS bit to 1 selects the SMBus and enables the HOAE bit in ICSER.

27.2.6 ICFER : I^{2}C Bus Function Enable Register

Base address: IICn = 0x4009_F000 + 0x0100 × n (n = 0, 1)

Offset address: 0x05

Bit position:	7	6	5	4	3	2	1	0
Bit field:	FMPE	SCLE	NFE	NACKE	SALE	NALE	MALE	TMOE
Value after reset:	0	1	1	1	0	0	1	0

Bit	Symbol	Function	R/W
0	TMOE	Timeout Function Enable 0: Disable 1: Enable	R/W
1	MALE	Master Arbitration-Lost Detection Enable 0: Disable the arbitration-lost detection function and disable automatic clearing of the MST and TRS bits in ICCR2 when arbitration is lost 1: Enable the arbitration-lost detection function and enable automatic clearing of the MST and TRS bits in ICCR2 when arbitration is lost	R/W
2	NALE	NACK Transmission Arbitration-Lost Detection Enable 0: Disable 1: Enable	R/W
3	SALE	Slave Arbitration-Lost Detection Enable 0: Disable 1: Enable	R/W
4	NACKE	NACK Reception Transfer Suspension Enable 0: Do not suspend transfer operation during NACK reception (disable transfer suspension) 1: Suspend transfer operation during NACK reception (enable transfer suspension)	R/W
5	NFE	Digital Noise Filter Circuit Enable 0: Do not use the digital noise filter circuit 1: Use the digital noise filter circuit	R/W
6	SCLE	SCL Synchronous Circuit Enable 0: Do not use the SCL synchronous circuit 1: Use the SCL synchronous circuit	R/W
7	FMPE*1	Fast-Mode Plus Enable 0: Do not use the Fm+ slope control circuit for the SCLn and SDAn pins 1: Use the Fm+ slope control circuit for the SCLn and SDAn pins.	R/W

Note 1. The Fast-mode Plus enable bit (FMPE) is supported by IIC0 (SCL0_A, SDA0_A) and IIC1 (SCL1_A, SDA1_A). Bit [7] is the reserved bit in the not supported by IIC0 (SCL0_B, SDA0_B).

TMOE bit (Timeout Function Enable)

The TMOE bit enables or disables the timeout function. For details on this function, see section 27.12.1. Timeout Function.

MALE bit (Master Arbitration-Lost Detection Enable)

The MALE bit specifies whether to use the arbitration-lost detection function in master mode. Normally, set this bit to 1.

NALE bit (NACK Transmission Arbitration-Lost Detection Enable)

The NALE bit specifies whether to cause arbitration to be lost when ACK is detected during transmission of NACK in receive mode, for example when slaves with the same address exist on the bus or when two or more masters select the same slave device simultaneously with a different number of receive bytes.

SALE bit (Slave Arbitration-Lost Detection Enable)

The SALE bit specifies whether to cause arbitration to be lost when a value different from the value being transmitted is detected on the bus in slave transmit mode, for example when slaves with the same address exist on the bus or when a mismatch with the transmit data occurs because of noise.

NACKE bit (NACK Reception Transfer Suspension Enable)

The NACKE bit specifies whether to continue or discontinue the transfer operation when NACK is received in transmit mode. Normally, set this bit to 1.

When NACK is received with the NACKE bit set to 1, the next transfer operation is suspended. When the NACKE bit is 0, the next transfer operation continues regardless of the received acknowledge content.

For details, see section 27.9.2. NACK Reception Transfer Suspension Function.

SCLE bit (SCL Synchronous Circuit Enable)

The SCLE bit specifies whether to synchronize the SCL clock with the SCL input clock. Normally, set this bit to 1.

When the SCLE bit is set to 0 (no SCL synchronous circuit used), the IIC does not synchronize the SCL clock with the SCL input clock. With this setting, the IIC outputs the SCL clock at the transfer rate set in ICBRH and ICBRL, regardless of the SCLn line state. For this reason, if the bus load of the I^2C bus line is much larger than the specification value, or if the SCL clock output overlaps in multiple masters, a short-cycle SCL clock that does not meet the specification might be output. When no SCL synchronous circuit is used, it also affects the issuing of the start, restart, and stop conditions, and the continuous output of extra SCL clock cycles.

Do not set this bit to 0 except when checking the output of the set transfer rate.

FMPE bit (Fast-Mode Plus Enable)

The FMPE bit specifies whether to use a slope control circuit for Fast-mode Plus (Fm+).

When this bit is set to 1, a slope control circuit conforming to the I^2C bus Fast-mode Plus (Fm+) standard (tof) is selected. When this bit is set to 0, a slope control circuit conforming to the I^2C bus Standard-mode (Sm) and Fast-mode (Fm) standards (tof) is selected.

Set this bit to 1 when using transmission rates up to 1 Mbps (Fast-mode Plus (Fm+) standard). Set it to 0 when using other transmission rates (up to 100 kbps (Sm) or up to 400 kbps (Fm)) or for SMBus (10 to 100 kbps).

27.2.7 ICSER : I^2C Bus Status Enable Register

Base address: IICn = 0x4009_F000 + 0x0100 × n (n = 0, 1)

Offset address: 0x06

Bit position:	7	6	5	4	3	2	1	0
Bit field:	HOAE	—	DIDE	—	GCAE	SAR2E	SAR1E	SAR0E
Value after reset:	0	0	0	0	1	0	0	1

Bit	Symbol	Function	R/W
0	SAR0E	Slave Address Register 0 Enable 0: Disable slave address in SARL0 and SARU0 1: Enable slave address in SARL0 and SARU0	R/W

Bit	Symbol	Function	R/W
1	SAR1E	Slave Address Register 1 Enable 0: Disable slave address in SARL1 and SARU1 1: Enable slave address in SARL1 and SARU1	R/W
2	SAR2E	Slave Address Register 2 Enable 0: Disable slave address in SARL2 and SARU2 1: Enable slave address in SARL2 and SARU2	R/W
3	GCAE	General Call Address Enable 0: Disable general call address detection 1: Enable general call address detection	R/W
4	—	This bit is read as 0. The write value should be 0.	R/W
5	DIDE	Device-ID Address Detection Enable 0: Disable device-ID address detection 1: Enable device-ID address detection	R/W
6	—	This bit is read as 0. The write value should be 0.	R/W
7	HOAE	Host Address Enable 0: Disable host address detection 1: Enable host address detection	R/W

SARyE bit (Slave Address Register y Enable) (y = 0 to 2)

The SARyE bit enables or disables the received slave address and the slave address set in SARLy and SARUy.

When this bit is set to 1, the slave address set in SARLy and SARUy is enabled and is compared with the received slave address. When this bit is set to 0, the slave address set in SARLy and SARUy is disabled and is ignored even if it matches the received slave address.

GCAE bit (General Call Address Enable)

The GCAE bit specifies whether to ignore the general call address (0000 000b + 0 [W]: All 0) when it is received.

When this bit is set to 1, if the received slave address matches the general call address, the IIC recognizes the received slave address as the general call address independently of the slave addresses set in SARLy and SARUy (y = 0 to 2) and performs the data receive operation. When this bit is set to 0, the received slave address is ignored even if it matches the general call address.

DIDE bit (Device-ID Address Detection Enable)

The DIDE bit specifies whether to recognize and execute the device-ID address when a device ID (1111 100b) is received in the first frame after a start or restart condition is detected.

When this bit is set to 1, if the received first frame matches the device ID, the IIC recognizes that the device-ID address was received. When the next R/W# bit is 0 (W), the IIC recognizes the second and the subsequent frames as slave addresses and continues the receive operation. When this bit is set to 0, the IIC ignores the received first frame even if it matches the device-ID address, and it recognizes the first frame as a normal slave address.

For details on this function, see section 27.7.3. Device-ID Address Detection.

HOAE bit (Host Address Enable)

The HOAE bit specifies whether to ignore the received host address (0001 000b) when the SMBS bit in ICMR3 is 1.

When this bit is set to 1 while the SMBS bit in ICMR3 is 1, if the received slave address matches the host address, the IIC recognizes the received slave address as the host address independently of the slave addresses set in SARLy and SARUy (y = 0 to 2) and performs the receive operation.

When the SMBS bit in ICMR3 or the HOAE bit is set to 0, the received slave address is ignored even if it matches the host address.

27.2.8 ICIER : I²C Bus Interrupt Enable Register

Base address: IICn = 0x4009_F000 + 0x0100 × n (n = 0, 1)

Offset address: 0x07

Bit position:	7	6	5	4	3	2	1	0
Bit field:	TIE	TEIE	RIE	NAKIE	SPIE	STIE	ALIE	TMOIE
Value after reset:	0	0	0	0	0	0	0	0

Bit	Symbol	Function	R/W
0	TMOIE	Timeout Interrupt Request Enable 0: Disable timeout interrupt (TMOI) request 1: Enable timeout interrupt (TMOI) request	R/W
1	ALIE	Arbitration-Lost Interrupt Request Enable 0: Disable arbitration-lost interrupt (ALI) request 1: Enable arbitration-lost interrupt (ALI) request	R/W
2	STIE	Start Condition Detection Interrupt Request Enable 0: Disable start condition detection interrupt (STI) request 1: Enable start condition detection interrupt (STI) request	R/W
3	SPIE	Stop Condition Detection Interrupt Request Enable 0: Disable stop condition detection interrupt (SPI) request 1: Enable stop condition detection interrupt (SPI) request	R/W
4	NAKIE	NACK Reception Interrupt Request Enable 0: Disable NACK reception interrupt (NAKI) request 1: Enable NACK reception interrupt (NAKI) request	R/W
5	RIE	Receive Data Full Interrupt Request Enable 0: Disable receive data full interrupt (IICn_RXI) request 1: Enable receive data full interrupt (IICn_RXI) request	R/W
6	TEIE	Transmit End Interrupt Request Enable 0: Disable transmit end interrupt (IICn_TEI) request 1: Enable transmit end interrupt (IICn_TEI) request	R/W
7	TIE	Transmit Data Empty Interrupt Request Enable 0: Disable transmit data empty interrupt (IICn_TXI) request 1: Enable transmit data empty interrupt (IICn_TXI) request	R/W

TMOIE bit (Timeout Interrupt Request Enable)

The TMOIE bit enables or disables timeout interrupt (TMOI) requests when the TMOF flag in ICSR2 is 1. To cancel a TMOI interrupt request, set the TMOF flag or the TMOIE bit to 0.

ALIE bit (Arbitration-Lost Interrupt Request Enable)

The ALIE bit enables or disables arbitration-lost interrupt (ALI) requests when the AL flag in ICSR2 is 1. To cancel an ALI interrupt request, set the AL flag or the ALIE bit to 0.

STIE bit (Start Condition Detection Interrupt Request Enable)

The STIE bit enables or disables start condition detection interrupt (STI) requests when the START flag in ICSR2 is 1. To cancel an STI interrupt request, set the START flag or the STIE bit to 0.

SPIE bit (Stop Condition Detection Interrupt Request Enable)

The SPIE bit enables or disables stop condition detection interrupt (SPI) requests when the STOP flag in ICSR2 is 1. To cancel an SPI interrupt request, set the STOP flag or the SPIE bit to 0.

NAKIE bit (NACK Reception Interrupt Request Enable)

The NAKIE bit enables or disables NACK reception interrupt (NAKI) requests when the NACKF flag in ICSR2 is 1. To cancel an NAKI interrupt request, set the NACKF flag or the NAKIE bit to 0.

RIE bit (Receive Data Full Interrupt Request Enable)

The RIE bit enables or disables receive data full interrupt (IICn_RXI) requests when the RDRF flag in ICSR2 is 1.

TEIE bit (Transmit End Interrupt Request Enable)

The TEIE bit enables or disables transmit end interrupt (IICn_TEI) requests when the TEND flag in ICSR2 is 1. To cancel an IICn_TEI interrupt request, set the TEND flag or the TEIE bit to 0.

TIE bit (Transmit Data Empty Interrupt Request Enable)

The TIE bit enables or disables transmit data empty interrupt (IICn_TXI) requests when the TDRE flag in ICSR2 is 1.

27.2.9 ICSR1 : I^{2}C Bus Status Register 1

Base address: IICn = 0x4009_F000 + 0x0100 × n (n = 0, 1)

Offset address: 0x08

Bit position:	7	6	5	4	3	2	1	0
Bit field:	HOA	—	DID	—	GCA	AAS2	AAS1	AAS0
Value after reset:	0	0	0	0	0	0	0	0

Bit	Symbol	Function	R/W
0	AAS0	Slave Address 0 Detection Flag 0: Slave address 0 not detected 1: Slave address 0 detected	R/(W)*1
1	AAS1	Slave Address 1 Detection Flag 0: Slave address 1 not detected 1: Slave address 1 detected	R/(W)*1
2	AAS2	Slave Address 2 Detection Flag 0: Slave address 2 not detected 1: Slave address 2 detected	R/(W)*1
3	GCA	General Call Address Detection Flag 0: General call address not detected 1: General call address detected	R/(W)*1
4	—	This bit is read as 0. The write value should be 0.	R/W
5	DID	Device-ID Address Detection Flag This bit is set to 1 when the first frame received immediately after a start condition is detected matches a value of (device ID (1111 100b) + 0[W]). 0: Device-ID command not detected 1: Device-ID command detected	R/(W)*1
6	—	This bit is read as 0. The write value should be 0.	R/W
7	HOA	Host Address Detection Flag This bit is set to 1 when the received slave address matches the host address (0001 000b). 0: Host address not detected 1: Host address detected	R/(W)*1

Note 1. Only 0 can be written to clear the flag.

AASy flag (Slave Address y Detection flag) (y = 0 to 2)

The AASy flag indicates whether slave address y was detected.

[Setting conditions]

For 7-bit address format (SARUy.FS = 0):

- When the received slave address matches the SVA[6:0] value in SARLy, with the SARyE bit in ICSER set to 1 (slave address y detection enabled).
  The AASy flag is set to 1 on the rising edge of the ninth SCL clock cycle in the frame.

For 10-bit address format: (SARUy.FS = 1):

- When the received slave address matches a value of (11110b + SVA[1:0] in SARUy), and the subsequent address matches the SARLy value, with the SARyE bit in ICSER set to 1 (slave address y detection enabled).
  The AASy flag is set to 1 on the rising edge of the ninth SCL clock cycle in the frame.

[Clearing conditions]

- When 0 is written to the AASy flag after reading AASy = 1
- When a stop condition is detected
- When 1 is written to the IICRST bit in ICCR1 to apply an IIC reset or an internal reset.

For 7-bit address format (SARUy.FS = 0):

- When the received slave address does not match the SVA[6:0] value in SARLy, with the SARyE bit in ICSER set to 1 (slave address y detection enabled).
  The AASy flag is set to 0 on the rising edge of the ninth SCL clock cycle in the frame.

For 10-bit address format (SARUy.FS = 1):

- When the received slave address does not match a value of (11110b + SVA[1:0] in SARUy), with the SARyE bit in ICSER set to 1 (slave address y detection enabled)
  The AASy flag is set to 0 on the rising edge of the ninth SCL clock cycle in the frame.
- When the received slave address matches a value of (11110b + SVA[1:0] in SARUy), and the subsequent address does not match the SARLy value, with the SARyE bit in ICSER set to 1 (slave address y detection enabled).
  The AASy flag is set to 0 on the rising edge of the ninth SCL clock cycle in the frame.

GCA flag (General Call Address Detection Flag)

The GCA flag indicates whether the general call address was detected.

[Setting condition]

- When the received slave address matches the general call address (0000 000b + 0 [W]), with the GCAE bit in ICSER set to 1 (general call address detection enabled).
  The GCA flag is set to 1 on the rising edge of the ninth SCL clock cycle in the frame.

[Clearing conditions]

- When 0 is written to the GCA flag after reading GCA = 1
- When a stop condition is detected
- When the received slave address does not match the general call address (0000 000b + 0 [W]), with the GCAE bit in ICSER set to 1 (general call address detection enabled)
  The GCA flag is set to 0 on the rising edge of the ninth SCL clock cycle in the frame.
- When 1 is written to the IICRST bit in ICCR1 to apply an IIC reset or an internal reset.

DID flag (Device-ID Address Detection Flag)

The DID flag indicates whether the device-ID address was detected.

[Setting condition]

- When the first frame received immediately after a start or restart condition is detected matches a value of (device ID (1111 100b) + 0 [W]), with the DIDE bit in ICSER set to 1 (device-ID address detection enabled).
  The DID flag is set to 1 on the rising edge of the ninth SCL clock cycle in the frame.

[Clearing conditions]

- When 0 is written to the DID flag after reading DID = 1
- When a stop condition is detected
- When the first frame received immediately after a start or restart condition is detected does not match a value of (device ID (1111 100b)), with the DIDE bit in ICSER set to 1 (device-ID address detection enabled)
  The DID flag is set to 0 on the rising edge of the ninth SCL clock cycle in the frame.

- When the first frame received immediately after a start or restart condition is detected matches a value of (device ID (1111 100b) + 0 [W]), and the second frame does not match any slave address from 0 to 2, with the DIDE bit in ICSER set to 1 (device-ID address detection enabled)
  The DID flag is set to 0 on the rising edge of the ninth SCL clock cycle in the frame.
- When 1 is written to the IICRST bit in ICCR1 to apply an IIC reset or an internal reset.

HOA flag (Host Address Detection Flag)

The HOA flag indicates whether the host address was detected.

[Setting condition]

- When the received slave address matches the host address (0001 000b), with the HOAE bit in ICSER set to 1 (host address detection enabled).
  The HOA flag is set to 1 on the rising edge of the ninth SCL clock cycle in the frame.

[Clearing conditions]

- When 0 is written to the HOA flag after reading HOA = 1
- When a stop condition is detected
- When the received slave address does not match the host address (0001 000b), with the HOAE bit in ICSER set to 1 (host address detection enabled)
  The HOA flag is set to 0 on the rising edge of the ninth SCL clock cycle in the frame.
- When 1 is written to the IICRST bit in ICCR1 to apply an IIC reset or an internal reset.

27.2.10 ICSR2 : I2C Bus Status Register 2

Base address: IICn = 0x4009_F000 + 0x0100 × n (n = 0, 1)

Offset address: 0x09

Bit position:	7	6	5	4	3	2	1	0
Bit field:	TDRE	TEND	RDRF	NACKF	STOP	START	AL	TMOF
Value after reset:	0	0	0	0	0	0	0	0

Bit	Symbol	Function	R/W
0	TMOF	Timeout Detection Flag 0: Timeout not detected 1: Timeout detected	R/(W)*1
1	AL	Arbitration-Lost Flag 0: Arbitration not lost 1: Arbitration lost	R/(W)*1
2	START	Start Condition Detection Flag 0: Start condition not detected 1: Start condition detected	R/(W)*1
3	STOP	Stop Condition Detection Flag 0: Stop condition not detected 1: Stop condition detected	R/(W)*1
4	NACKF	NACK Detection Flag 0: NACK not detected 1: NACK detected	R/(W)*1
5	RDRF	Receive Data Full Flag 0: ICDRR contains no receive data 1: ICDRR contains receive data	R/(W)*1
6	TEND	Transmit End Flag 0: Data being transmitted 1: Data transmit complete	R/(W)*1

Bit	Symbol	Function	R/W
7	TDRE	Transmit Data Empty Flag 0: ICDRT contains transmit data 1: ICDRT contains no transmit data	R

Note 1. Only 0 can be written, to clear the flag.

TMOF flag (Timeout Detection Flag)

The TMOF flag is set to 1 when the IIC detects a timeout because the SCLn line state remains unchanged for the set period.

[Setting condition]

- When the SCLn line state remains unchanged for the period specified in the ICMR2.TMOH, TMOL, and TMOS bits while the ICFER.TMOE bit is 1 (timeout function enabled) in master or in slave mode and the received slave address matches.

[Clearing conditions]

- When 0 is written to the TMOF flag after reading TMOF = 1
- When 1 is written to the IICRST bit in ICCR1 to apply an IIC reset or an internal reset.

AL flag (Arbitration-Lost Flag)

The AL flag indicates that bus mastership was lost in arbitration because of a bus conflict or some other reason when a start condition was issued or an address and data was transmitted. The IIC monitors the level on the SDAn line during transmission and, if the level on the line does not match the value of the bit being output, is set the value of the AL flag to 1 to indicate that the bus is occupied by another device.

The IIC can also set the AL flag to indicate the detection of arbitration loss during NACK transmission or during data transmission.

[Setting conditions]

When master arbitration-lost detection is enabled (ICFER.MALE = 1):

- When the internal SDA output state does not match the SDAn line level on the rising edge of the SCL clock except for the ACK period during data transmission in master transmit mode
- When a start condition is detected while the ST bit in ICCR2 is 1 (start condition requested) or the internal SDA output state does not match the SDAn line level
- When the ST bit in ICCR2 is 1 (start condition requested), with the BBSY flag in ICCR2 set to 1.

When NACK arbitration-lost detection is enabled (ICFER.NALE = 1):

- When the internal SDA output state does not match the SDAn line level on the rising edge of the SCL clock in the ACK period during NACK transmission in receive mode.

When slave arbitration-lost detection is enabled (ICFER.SALE = 1):

- When the internal SDA output state does not match the SDAn line level on the rising edge of the SCL clock, except for the ACK period during data transmission in slave transmit mode.

[Clearing conditions]

- When 0 is written to the AL flag after reading AL = 1
- When 1 is written to the IICRST bit in ICCR1 to apply an IIC reset or an internal reset.

Table 27.4 Relationship between arbitration-lost generation sources and arbitration-lost enable functions

ICFER			ICSR2		
MALE	NALE	SALE	AL	Error	Arbitration-lost generation source
1	x	x	1	Start condition issuance error	When internal SDA output state does not match SDAn line level when a start condition is detected, while the ST bit in ICCR2 is 1
					When ST in ICCR2 is set to 1 while BBSY in ICCR2 is 1
			1	Transmit data mismatch	When transmit data (including slave address) does not match the bus state in master transmit mode
x	1	x	1	NACK transmission mismatch	When ACK is detected during transmission of NACK in master or slave receive mode
x	x	1	1	Transmit data mismatch	When transmit data does not match the bus state in slave transmit mode

x: Don’t care

START flag (Start Condition Detection Flag)

The START flag indicates whether a start or restart condition was detected.

[Setting condition]

- When a start or restart condition is detected.

[Clearing conditions]

- When 0 is written to the START flag after reading START = 1
- When a stop condition is detected
- When 1 is written to the IICRST bit in ICCR1 to apply an IIC reset or an internal reset.

STOP flag (Stop Condition Detection Flag)

The STOP flag indicates whether a stop condition was detected.

[Setting condition]

- When a stop condition is detected.

[Clearing conditions]

- When 0 is written to the STOP flag after reading STOP = 1
- When 1 is written to the IICRST bit in ICCR1 to apply an IIC reset or an internal reset.

NACKF flag (NACK Detection Flag)

The NACKF flag indicates whether a NACK was detected.

[Setting condition]

- When acknowledge is not received (NACK received) from the receive device in transmit mode, with the NACKE bit in ICFER set to 1 (transfer suspension enabled).

[Clearing conditions]

- When 0 is written to the NACKF flag after reading NACKF = 1
- When 1 is written to the IICRST bit in ICCR1 to apply an IIC reset or an internal reset.

Note: When the NACKF flag is set to 1, the IIC suspends data transmission and reception. Writing to ICDRT in transmit mode or reading from ICDRR in receive mode with the NACKF flag set to 1 does not enable data transmit or receive operation. To restart data transmission or reception, set the NACKF flag to 0.

RDRF flag (Receive Data Full Flag)

The RDRF flag indicates whether the ICDRR contains receive data.

[Setting conditions]

- When receive data is transferred from ICDRS to ICDRR
  The RDRF flag is set to 1 on the rising edge of the eighth or ninth SCL clock cycle (selected in the RDRFS bit in ICMR3).
- When the received slave address matches after a start or restart condition is detected with the TRS bit in ICCR2 set to 0.

[Clearing conditions]

- When 0 is written to the RDRF flag after reading RDRF = 1
- When data is read from ICDRR
- When 1 is written to the IICRST bit in ICCR1 to apply an IIC reset or an internal reset.

TEND flag (Transmit End Flag)

The TEND flag indicates completion of transmission.

[Setting condition]

- On the rising edge of the ninth SCL clock cycle while the TDRE flag is 1.

[Clearing conditions]

- When 0 is written to the TEND flag after reading TEND = 1
- When data is written to ICDRT
- When a stop condition is detected
- When 1 is written to the IICRST bit in ICCR1 to apply an IIC reset or an internal reset.

TDRE flag (Transmit Data Empty Flag)

The TDRE flag indicates whether the ICDRT contains transmit data.

[Setting conditions]

- When data is transferred from ICDRT to ICDRS and ICDRT becomes empty
- When the TRS bit in ICCR2 is set to 1
- When the received slave address matches while the TRS bit is 1.

[Clearing conditions]

- When data is written to ICDRT
- When the TRS bit in ICCR2 is set to 0
- When 1 is written to the IICRST bit in ICCR1 to apply an IIC reset or an internal reset.

Note: When the NACKF flag is set to 1 while the NACKE bit in ICFER is 1, the IIC suspends data transmission and reception. In this case, if the TDRE flag is 0 (next transmit data written), data is transferred to the ICDRS register and the ICDRT register becomes empty on the rising edge of the 9th clock cycle, but the TDRE flag does not set to 1.

27.2.11 ICWUR : I^{2}C Bus Wakeup Unit Register

Base address: IIC0WU = 0x4009_F014

Offset address: 0x02

Bit position:	7	6	5	4	3	2	1	0
Bit field:	WUE	WUIE	WUF	WUACK	—	—	—	WUAFA
Value after reset:	0	0	0	1	0	0	0	0

Bit	Symbol	Function	R/W
0	WUAFA	Wakeup Analog Filter Additional Selection 0: Do not add the wakeup analog filter 1: Add the wakeup analog filter	R/W
3:1	—	These bits are read as 0. The write value should be 0.	R/W
4	WUACK	ACK Bit for Wakeup Mode Choice of four response modes in combination with ICCR1.IICRST and WUACK. See Table 27.5.	R/W
5	WUF	Wakeup Event Occurrence Flag 0: Slave address not matching during wakeup 1: Slave address matching during wakeup	R/W
6	WUIE	Wakeup Interrupt Request Enable 0: Disable wakeup interrupt request (IIC0_WUI) 1: Enable wakeup interrupt request (IIC0_WUI)	R/W
7	WUE	Wakeup Function Enable 0: Disable wakeup function 1: Enable wakeup function	R/W

Table 27.5 Wakeup mode

IICRST	WUACK	Operation mode	Description
0	0	Normal wakeup mode 1	ACK response on 9th SCL, and SCL low-hold after 9th SCL.
0	1	Normal wakeup mode 2	No ACK response immediately and SCL low-hold between 8th and 9th SCL. SCL low-hold release and ACK response on 9th SCL.
1	0	Command recovery mode	ACK response on 9th SCL and no SCL low-hold.
1	1	EEP response mode	NACK response on 9th SCL and no SCL low-hold.

WUF flag (Wakeup Event Occurrence Flag)

The WUF flag indicates whether the slave address is matching during wakeup.

[Setting condition]

- When PCLKB is supplied after a slave-address match in the first 8th SCL low during wakeup mode.

[Clearing conditions]

- When 0 is written to the WUF flag after reading WUF = 1
- When ICE = 0 and IICRST = 1.

27.2.12 ICWUR2 : I^{2}C Bus Wakeup Unit Register 2

Base address: IIC0WU = 0x4009_F014

Offset address: 0x03

Bit position:	7	6	5	4	3	2	1	0
Bit field:	—	—	—	—	—	WUSYF	WUASYF	WUSEN
Value after reset:	1	1	1	1	1	1	0	1

Bit	Symbol	Function	R/W
0	WUSEN	Wakeup Function Synchronous Enable 0: IIC asynchronous circuit enable 1: IIC synchronous circuit enable	R/W
1	WUASYF	Wakeup Function Asynchronous Operation Status Flag 0: IIC synchronous circuit enable condition 1: IIC asynchronous circuit enable condition	R

Bit	Symbol	Function	R/W
2	WUSYF	Wakeup Function Synchronous Operation Status Flag 0: IIC asynchronous circuit enable condition 1: IIC synchronous circuit enable condition	R
7:3	—	These bits are read as 1. The write value should be 1.	R/W

WUSEN bit (Wakeup Function Synchronous Enable)

The WUSEN bit is used in combination with the WUASYF flag (or WUSYF flag) to switch between the PCLKB synchronous and asynchronous operation, when the wakeup effective function is enabled (ICWUR.WUE = 1).

The PCLKB operation switches from synchronous to asynchronous operation:

When the ICCR2.BBSY flag is 0, if 0 is written to the WUSEN bit while the WUASYF flag is 0, the reception occurs independently of the operation of PCLKB (with PCLKB stopped) after it switches to the PCLKB asynchronous operation, on wakeup event detection.

The PCLKB operation switches from asynchronous to synchronous operation:

- When 1 is written to the WUSEN bit, with the WUASYF flag at 1, when a wakeup event is detected. After writing 1, the WUASYF flag immediately becomes 0.
- When the stop condition is detected with a wakeup event undetected.

WUASYF flag (Wakeup Function Asynchronous Operation Status Flag)

The WUASYF flag can place the IIC in PCLKB asynchronous operation when the wakeup effective function is enabled (ICWUR.WUE = 1).

[Setting condition]

- When the ICCR2.BBSY flag is 0, and the WUSEN bit is set to 0 with the ICWUR.WUE bit set to 1.

[Clearing conditions]

- When 1 is written to the WUSEN bit after detecting the wake-up event with ICWUR.WUE bit set to 1.
- When a stop condition is detected with WUSEN bit set to 1 before detecting the wake-up event with WUASYF flag set to 1 with ICWUR.WUE bit set to 1.
- When you write 1 in the WUSEN bit with the WUASYF flag detected 1 and the wake-up event in the state of ICWUR.WUE = 1.
- ICCR1.ICE = 0 and ICCRST = 1 (ICC reset)
- ICWUR.WUE = 0.

WUSYF flag (Wakeup Function Synchronous Operation Status Flag)

It is shown that IIC is in the PCLKB synchronous operation at wake-up effective function (ICWUR.WUE = 1). This flag is a value in which the WUASYF flag is always reserved.

[Setting conditions]

- When 1 is written to the WUSEN bit after detecting the wake-up event with ICWUR.WUE bit set to 1 with WUSYF flag set to 0 with ICWUR.WUE bit set to 1.
- When a stop condition is detected with WUSEN bit set to 1 before detecting the wake-up event with WUSYF flag set to 0 with ICWUR.WUE bit set to 1.
- ICCR1.ICE = 0 and ICCRST = 1 (ICC reset)
- ICWUR.WUE = 0.

[Clearing condition]

- When the ICCR2.BBSY flag is 0 with the ICWUR.WUE bit set to 1 after writing 0 to the WUSEN bit.

27.2.13 SARLy : Slave Address Register L y (y = 0 to 2)

Base address: IICn = 0x4009_F000 + 0x0100 × n (n = 0, 1)

Offset address: 0x0A + 0x02 × y

Bit position:	7	6	5	4	3	2	1	0
Bit field:	SVA[6:0]							SVA0
Value after reset:	0	0	0	0	0	0	0	0

Bit	Symbol	Function	R/W
0	SVA0	10-bit Address LSB Slave address setting.	R/W
7:1	SVA[6:0]	7-bit Address/10-bit Address Lower Bits Slave address setting.	R/W

SVA0 bit (10-bit Address LSB)

When the 10-bit address format is selected (SARUy.FS = 1), the SVA0 bit functions as the LSB of a 10-bit address and is combined with the SVA[6:0] bits to form the lower 8 bits of a 10-bit address.

This bit is valid when the SARyE bit in ICSER is set to 1 (SARLy and SARUy enabled) and the SARUy.FS bit is 1. When the SARUy.FS or SARyE bit is 0, the setting in this bit is ignored.

SVA[6:0] bits (7-bit Address/10-bit Address Lower Bits)

When the 7-bit address format is selected (SARUy.FS = 0), the SVA[6:0] bits function as a 7-bit address. When the 10-bit address format is selected (SARUy.FS = 1), these bits combine with the SVA0 bit to form the lower 8 bits of a 10-bit address.

When the SARyE bit in ICSER is 0, the setting in these bits is ignored.

27.2.14 SARUy : Slave Address Register U y (y = 0 to 2)

Base address: IICn = 0x4009_F000 + 0x0100 × n (n = 0, 1)

Offset address: 0x0B + 0x02 × y

Bit position:	7	6	5	4	3	2	1	0
Bit field:	—	—	—	—	—	SVA[1:0]		FS
Value after reset:	0	0	0	0	0	0	0	0

Bit	Symbol	Function	R/W
0	FS	7-bit/10-bit Address Format Select 0: Select 7-bit address format 1: Select 10-bit address format	R/W
2:1	SVA[1:0]	10-bit Address Upper Bits Slave address setting.	R/W
7:3	—	These bits are read as 0. The write value should be 0.	R/W

FS bit (7-bit/10-bit Address Format Select)

The FS bit selects 7- or 10-bit format for slave address y (in SARLy and SARUy).

When the SARyE bit in ICSER is set to 1 (SARLy and SARUy enabled) and the SARUy.FS bit is 0, the 7-bit address format is selected for slave address y, the SVA[6:0] setting in SARLy is valid, and the SVA[1:0] and SVA0 settings in SARLy are ignored.

When the SARyE bit in ICSER is set to 1 (SARLy and SARUy enabled) and the SARUy.FS bit is 1, the 10-bit address format is selected for slave address y and the SVA[1:0] and SARLy settings are valid.

When the SARyE bit in ICSER is 0 (SARLy and SARUy disabled), the SARUy.FS setting is invalid.

SVA[1:0] bits (10-bit Address Upper Bits)

When the 10-bit address format is selected (FS = 1), the SVA[1:0] bits function as the upper 2 bits of a 10-bit address.

These bits are valid when the SARyE bit in ICSER is set to 1 (SARLy and SARUy enabled) and the SARUy.FS bit is 1. When the SARUy.FS or SARyE bit is 0, the setting in these bits is ignored.

27.2.15 ICBRL : I²C Bus Bit Rate Low-Level Register

Base address: IICn = 0x4009_F000 + 0x0100 × n (n = 0, 1)

Offset address: 0x10

Bit position:	7	6	5	4	3	2	1	0
Bit field:	—	—	—	BRL[4:0]				
Value after reset:	1	1	1	1	1	1	1	1

Bit	Symbol	Function	R/W
4:0	BRL[4:0]	Bit Rate Low-Level Period Low-level period of SCL clock.	R/W
7:5	—	These bits are read as 1. The write value should be 1.	R/W

BRL[4:0] bits (Bit Rate Low-Level Period)

The BRL[4:0] bits set the low-level period of the SCL clock. ICBRL counts the low-level period with the internal reference clock source (IICφ) specified by the CKS[2:0] bits in ICMR1. ICBRL also generates the data setup time for automatic SCL low-hold operation, see section 27.9. Automatic Low-Hold Function for SCL. When the IIC is used in slave mode, the BRL[4:0] bits must be set to a value longer than the data setup time*1.

If the digital noise filter is enabled (NFE bit in ICFER is 1), set the BRL[4:0] bits to a value at least one greater than the number of stages in the noise filter. For details on the number of stages, see the description of the NF[1:0] bits in section 27.2.5. ICMR3 : I²C Bus Mode Register 3.

Note 1. Data setup time (t_{SU}: DAT)

250 ns for up to 100 kbps: Standard-mode (Sm)

100 ns for up to 400 kbps: Fast-mode (Fm)

50 ns for up to 1 Mbps: Fast-mode Plus (Fm+)

27.2.16 ICBRH : I²C Bus Bit Rate High-Level Register

Base address: IICn = 0x4009_F000 + 0x0100 × n (n = 0, 1)

Offset address: 0x11

Bit position:	7	6	5	4	3	2	1	0
Bit field:	—	—	—	BRH[4:0]				
Value after reset:	1	1	1	1	1	1	1	1

Bit	Symbol	Function	R/W
4:0	BRH[4:0]	Bit Rate High-Level Period High-level period of SCL clock.	R/W
7:5	—	These bits are read as 1. The write value should be 1.	R/W

BRH[4:0] bits (Bit Rate High-Level Period)

The BRH[4:0] bits set the high-level period of SCL clock. BRH[4:0] bits are valid in master mode. If the IIC is used only in slave mode, do not set the BRH[4:0] bits.

ICBRH counts the high-level period with the internal reference clock source (IICφ) specified in the CKS[2:0] bits in ICMR1.

If the digital noise filter is enabled (the NFE bit in ICFER is 1), set these bits to a value at least one greater than the number of stages in the noise filter. For the number of stages in the noise filter, see the description of the NF[1:0] bits in section 27.2.5. ICMR3 : I^2C Bus Mode Register 3.

The IIC transfer rate and the SCL clock duty are calculated using the following expressions (1) to (5):

1. ICFER.SCLE = 0
   Transfer rate = 1/[{(BRH + 1) + (BRL + 1)}/IICφ*1 + tr*2 + tf*2]
   Duty cycle = [tr + {(BRH + 1)/IICφ}]/[tr + tf + {(BRH + 1) + (BRL + 1)}/IICφ]
2. ICFER.SCLE = 1 and ICFER.NFE = 0 and CKS[2:0] = 000b (IICφ = PCLKB)
   Transfer rate = 1/[{(BRH + 3) + (BRL+ 3)}/IICφ + tr + tf]
   Duty cycle = [tr + {(BRH + 3)/IICφ}]/[tr + tf + {(BRH + 3) + (BRL + 3)}/IICφ]
3. ICFER.SCLE = 1 and ICFER.NFE = 1 and CKS[2:0] = 000b (IICφ = PCLKB)
   Transfer rate = 1/[{(BRH + 3 + nf*3) + (BRL + 3 + nf)}/IICφ + tr + tf]
   Duty cycle = [tr + {(BRH + 3 + nf)/IICφ}]/[tr + tf + {(BRH + 3 + nf) + (BRL + 3 + nf)}/IICφ]
4. ICFER.SCLE = 1 and ICFER.NFE = 0 and CKS[2:0] ≠ 000b
   Transfer rate = 1/[{(BRH + 2) + (BRL + 2)}/IICφ + tr + tf]
   Duty cycle = [tr + {(BRH + 2)/IICφ}]/[tr + tf + {(BRH + 2) + (BRL + 2)}/IICφ]
5. ICFER.SCLE = 1 and ICFER.NFE = 1 and CKS[2:0] ≠ 000b
   Transfer rate = 1/[{(BRH + 2 + nf) + (BRL + 2 + nf)}/IICφ + tr + tf]
   Duty cycle = [tr + {(BRH + 2 + nf)/IICφ}]/[tr + tf + {(BRH + 2 + nf) + (BRL + 2 + nf)}/IICφ]

Note 1. IICφ = PCLKB × division ratio
Note 2. The SCLn line rise time (tr) and SCLn line fall time (tf) depend on the total bus line capacitance (Cb) and the pull-up resistor (Rp). For details, see the I^2C bus standard from NXP Semiconductors.
Note 3. nf = Number of digital noise filters selected in the ICMR3.NF bit.

Table 27.6 Example of ICBRH/ICBRL Settings for Transfer Rate IIC when SCLE = 0

Transfer rate (kbps)	CKS[2:0] (ICMR1)	BRH[4:0] (ICBRH)	BRL[4:0] (ICBRL)	PCLKB (MHz)	NF[1:0]	Computation expression
100	011b	19 (0xF3)	23 (0xF7)	40	—	(1)
400	010b	6 (0xE6)	11 (0xEB)	40	—	(1)
1000	000b	10 (0xEA)	18 (0xF2)	40	—	(1)

Table 27.7 Example of ICBRH/ICBRL Settings for Transfer Rate when SCLE = 1 and NFE = 0

Transfer rate (kbps)	CKS[2:0] (ICMR1)	BRH[4:0] (ICBRH)	BRL[4:0] (ICBRL)	PCLKB (MHz)	NF[1:0]	Computation expression
100	100b	8 (0xE8)	10 (0xEA)	40	—	(4)
400	001b	9 (0xE9)	25 (0xF9)	40	—	(4)
1000	000b	7 (0xE7)	17 (0xF1)	40	—	(2)

Table 27.8 Example of ICBRH/ICBRL Settings for Transfer Rate when SCLE = 1 and NFE = 1

Transfer rate (kbps)	CKS[2:0] (ICMR1)	BRH[4:0] (ICBRH)	BRL[4:0] (ICBRL)	PCLKB (MHz)	NF[1:0]	Computation expression
100	011b	16 (0xF0)	20 (0xF4)	40	01b	(5)
400	001b	8 (0xE8)	22 (0xF6)	40	01b	(5)
1000	000b	5 (0xE5)	15 (0xEF)	40	01b	(3)

27.2.17 ICDRT : I²C Bus Transmit Data Register

Base address: IICn = 0x4009_F000 + 0x0100 × n (n = 0, 1)

Offset address: 0x12

Bit position:	7	6	5	4	3	2	1	0
Bit field:								
Value after reset:	1	1	1	1	1	1	1	1

When ICDRT detects a space in the I²C Bus Shift Register (ICDRS), it transfers the transmit data that was written to ICDRT to ICDRS and starts transmitting data in transmit mode. The double-buffer structure of ICDRT and ICDRS allows continuous transmit operation if the next transmit data is written to ICDRT while the ICDRS data is being transmitted.

ICDRT can always be read and written to. Write transmit data to ICDRT once when a transmit data empty interrupt (IICn_TXI) request is generated.

27.2.18 ICDRR : I²C Bus Receive Data Register

Base address: IICn = 0x4009_F000 + 0x0100 × n (n = 0, 1)

Offset address: 0x13

Bit position:	7	6	5	4	3	2	1	0
Bit field:								
Value after reset:	0	0	0	0	0	0	0	0

When 1 byte of data is received, the received data is transferred from the I²C Bus Shift Register (ICDRS) to ICDRR to enable the next data to be received. The double-buffer structure of ICDRS and ICDRR allows continuous receive operation if the received data is read from ICDRR while ICDRS is receiving data. ICDRR cannot be written to. Read data from ICDRR once when a receive data full interrupt (IICn_RXI) request is generated.

If ICDRR receives the next receive data before the current data is read from ICDRR (while the RDRF flag in ICSR2 is 1), the IIC automatically holds the SCL clock low 1 cycle before the RDRF flag is set to 1 next.

27.2.19 ICDRS : I²C Bus Shift Register

Base address: n/a

Offset address: n/a

Bit position:	7	6	5	4	3	2	1	0
Bit field:								
Value after reset:	—	—	—	—	—	—	—	—

ICDRS is an 8-bit shift register for data transmit and receive. During transmission, transmit data is transferred from ICDRT to ICDRS and is transmitted from the SDAn pin. During reception, data is transferred from ICDRS to ICDRR after 1 byte of data is received. ICDRS cannot be accessed directly.

27.3 Operation

27.3.1 Communication Data Format

The I²C bus format consists of 8-bit data and 1-bit acknowledge. The frame following a start or restart condition is an address frame that specifies a slave device with which the master device communicates. The specified slave is valid until a new slave is specified or a stop condition is issued.

Figure 27.3 shows the I²C bus format, and Figure 27.4 shows the I²C bus timing.

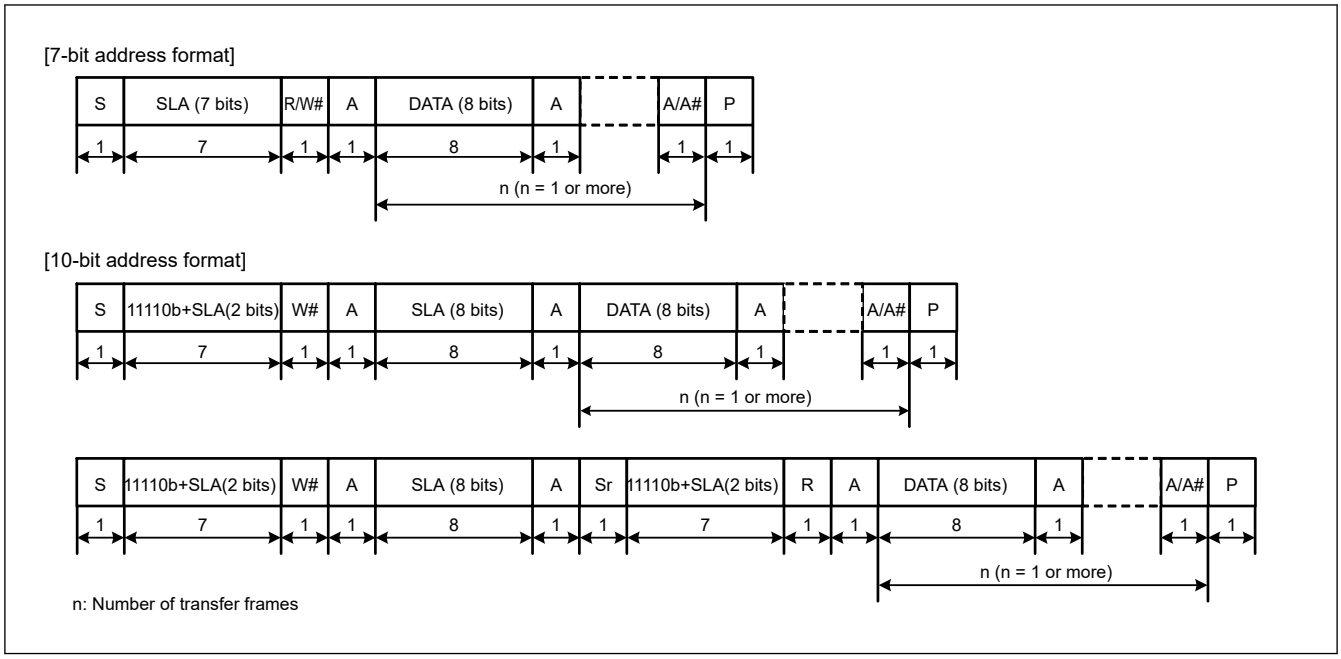

Figure 27.3 **I²C bus format**

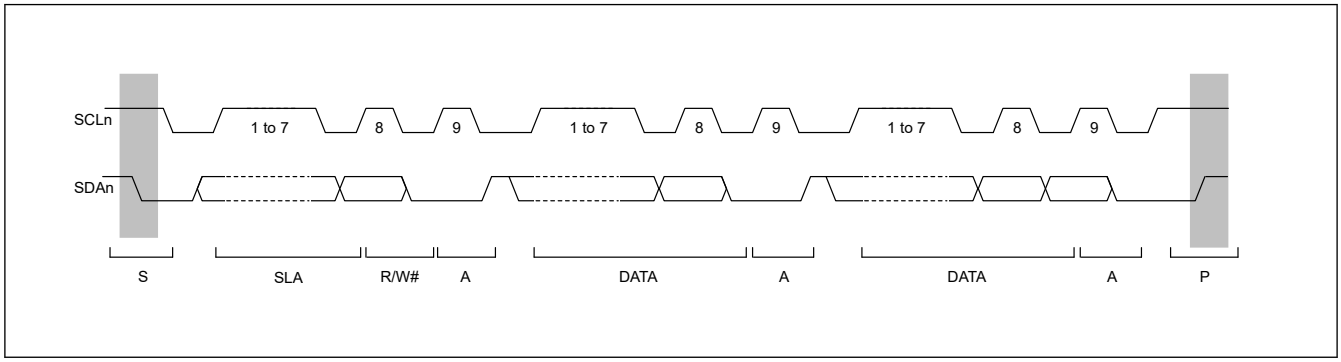

Figure 27.4 **I²C bus timing when the SLA setting = 7 bits**

S:	Start condition. The master device drives the SDAn line low from high while the SCLn line is high.
SLA:	Slave address, by which the master device selects a slave device.
R/W#:	Indicates the direction of data transfer: from the slave device to the master device when R/W# is 1, or from the master device to the slave device when R/W# is 0.
A:	Acknowledge. The receive device drives the SDAn line low. In master transmit mode, the slave device returns acknowledge. In master receive mode, the master device returns acknowledge.
A#:	Not Acknowledge. The receive device drives the SDAn line high.
Sr:	Restart condition. The master device drives the SDAn line low from the high level after the setup time has elapsed with the SCLn line high.
DATA:	Transmitted or received data.
P:	Stop condition. The master device drives the SDAn line high from low while the SCLn line is high.

27.3.2 Initial Settings

Before starting data transmission or reception, initialize the IIC using the procedure shown in Figure 27.5.

1. Set the ICCR1.ICE bit to 0 to set the SCLn and SDAn pins to the inactive state.
2. Set the ICCR1.IICRST bit to 1 to initiate IIC reset.
3. Set the ICCR1.ICE bit to 1 to initiate internal reset.

4. Set the SARLy, SARUy, ICSER, ICMR1, ICBRH, and ICBRL registers (y = 0 to 2), and set the other registers as required. For initial settings of the IIC, see Figure 27.5.
5. When the required register settings are complete, set the ICCR1.IICRST bit to 0 to release the IIC reset.

This procedure is not required if the IIC initialization is already complete.

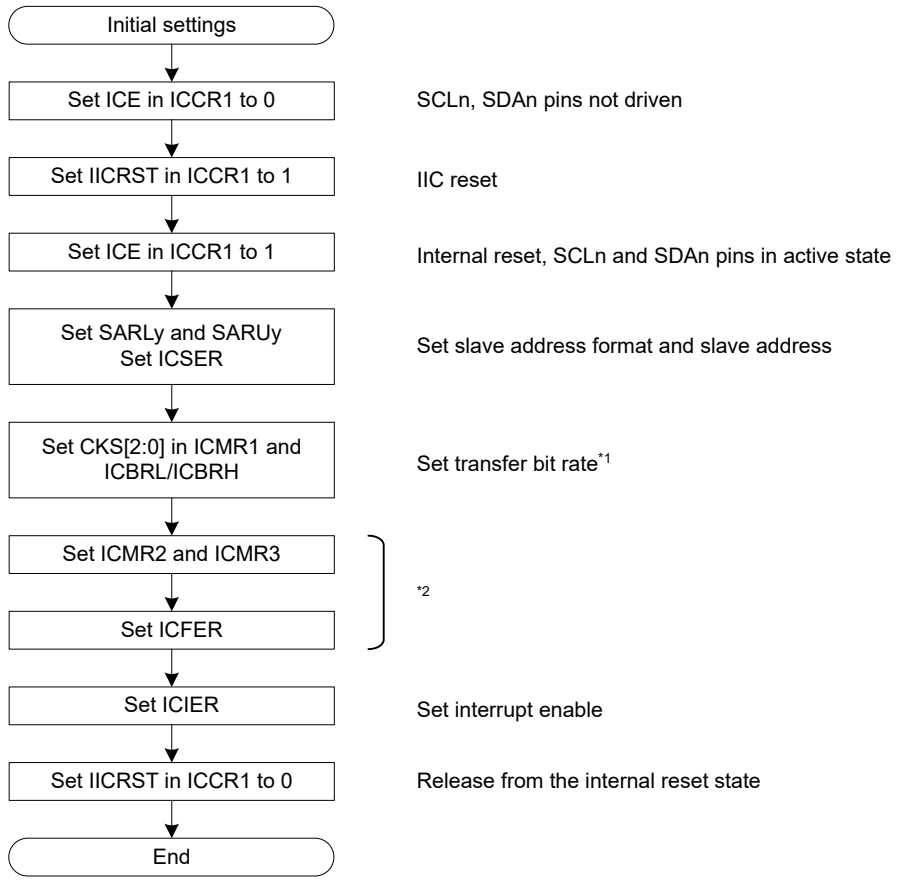

Note: n = 0
Note 1. When the IIC is used only in slave mode, set the ICBRL register to a value longer than the data setup time.
Note 2. Set these registers as required.

Figure 27.5 Example IIC initialization flow

27.3.3 Master Transmit Operation

In master transmit operation, the IIC outputs the SCL clock and transmitted data signals as the master device, and the slave device returns acknowledgments. Figure 27.6 shows an example of master transmission, and Figure 27.7 to Figure 27.9 show the operation timing in master transmission.

To set up and perform master transmission:

1. Process initial settings. For details, see section 27.3.2. Initial Settings.
2. Read the BBSY flag in ICCR2 to check that the bus is free, and then set the ST bit in ICCR2 to 1 (start condition request). On receiving the request, the IIC issues a start condition. At the same time, the BBSY and START flags in ICSR2 automatically set to 1 and the ST bit automatically is set to 0. At this time, if the start condition is detected and the internal levels for the SDA output state and the levels on the SDAn line match while the ST bit is 1, the IIC recognizes that issuance of the start condition as requested by the ST bit is successfully complete, and the MST and

TRS bits in ICCR2 automatically set to 1, placing the IIC in master transmit mode. The TDRE flag in ICSR2 also automatically is set to 1 in response to the setting of the TRS bit to 1.

3. Check that the TDRE flag in ICSR2 is 1, and then write the value for transmission (the slave address and the R/W# bit) to ICDRT. When the transmit data is written to ICDRT, the TDRE flag automatically is set to 0, the data is transferred from ICDRT to ICDRS, and the TDRE flag again is set to 1. After the byte containing the slave address and R/W# bit is transmitted, the value of the TRS bit automatically updates to select master transmit or master receive mode based on the value of the transmitted R/W# bit. If the value of the R/W# bit was 0, the IIC continues in master transmit mode. Because the ICSR2.NACKF flag being 1 at this time indicates that no slave device recognized the address or there was an error in communications, write 1 to the ICCR2.SP bit to issue a stop condition.
   For data transmission with an address in the 10-bit format, start by writing 11110b, the 2 higher-order bits of the slave address, and W to ICDRT as the first address transmission. For the second address transmission, write the 8 lower-order bits of the slave address to ICDRT.
4. Check that the TDRE flag in ICSR2 is 1, and then write the transmit data to the ICDRT register. The IIC automatically holds the SCLn line low until the transmit data is ready or a stop condition is issued.
5. After all bytes of transmit data are written to the ICDRT register, wait until the value in the TEND flag in ICSR2 returns to 1, and then set the SP bit in ICCR2 to 1 (stop condition requested). On receiving a stop condition request, the IIC issues the stop condition. Regarding issuing a stop condition, see section 27.11.3. Issuing a Stop Condition.
6. On detecting the stop condition, the IIC automatically sets the MST and TRS bits in ICCR2 to 00b and enters slave receive mode. Additionally, it automatically sets the TDRE and TEND flags to 0, and sets the STOP flag in ICSR2 to 1.
7. Check that the ICSR2.STOP flag is 1, and then set the ICSR2.NACKF and STOP flags to 0 for the next transfer operation.

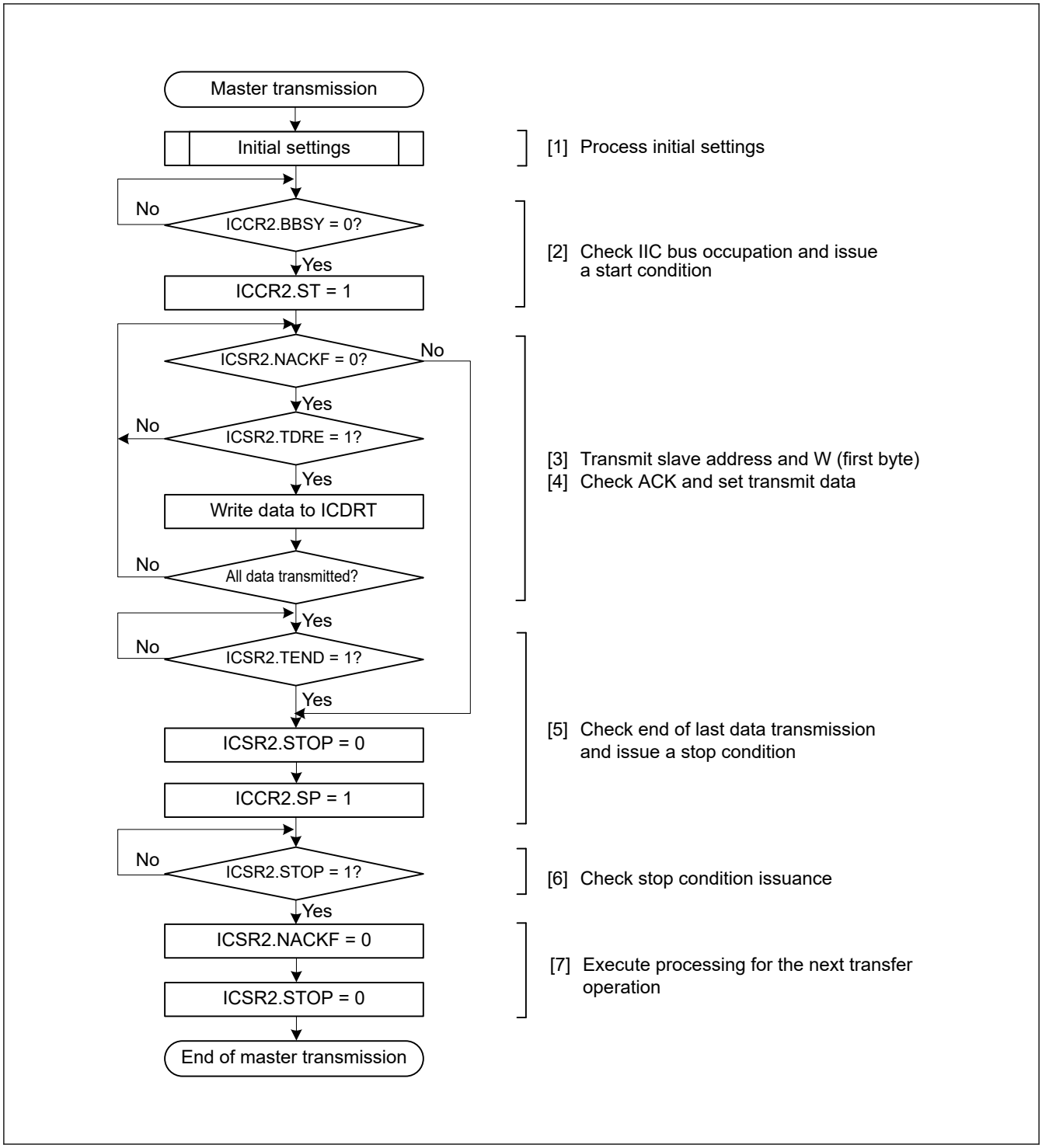

Figure 27.6 Example master transmission flow

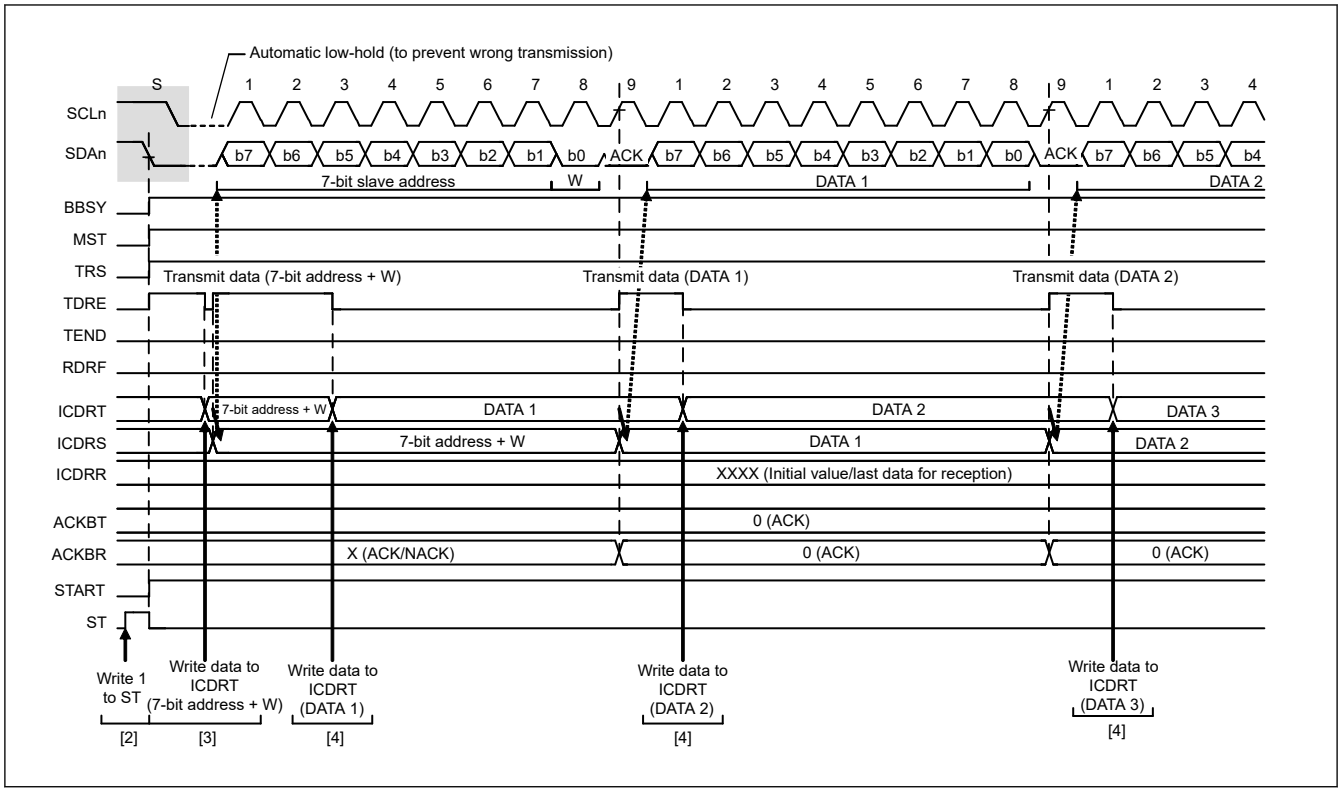

Figure 27.7 Master transmit operation timing (1) with 7-bit address format

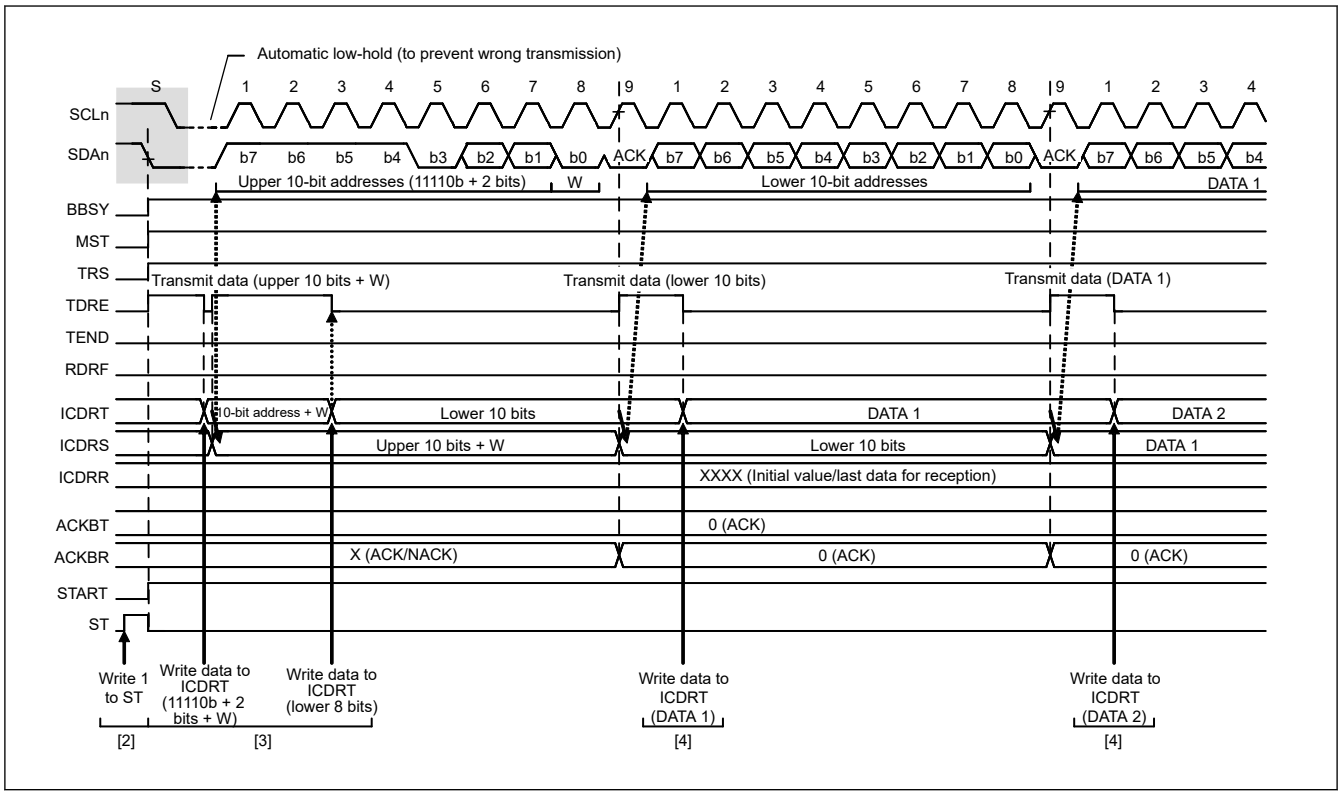

Figure 27.8 Master transmit operation timing (2) with 10-bit address format

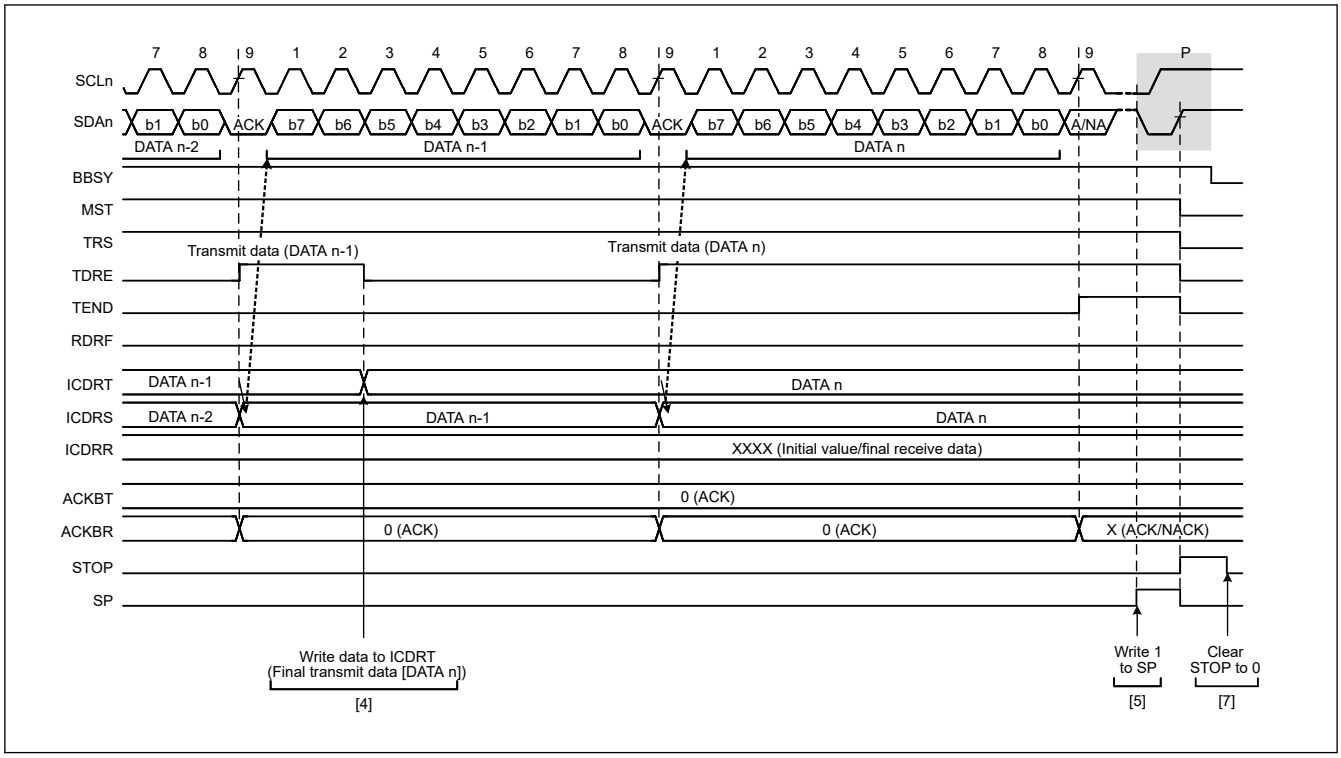

Figure 27.9 Master transmit operation timing (3)

27.3.4 Master Receive Operation

In master receive operation, the IIC as a master device outputs the SCL clock, receives data from the slave device, and returns acknowledgments. Because the IIC must start by sending a slave address to the associated slave device, this part of the procedure is performed in master transmit mode, but the subsequent steps are in master receive mode.

Figure 27.10 and Figure 27.11 show examples of master reception (7-bit address format), and Figure 27.12 to Figure 27.14 show the operation timing in master reception.

To set up and perform master reception:

1. Process initial settings. For details, see section 27.3.2. Initial Settings.
2. Read the BBSY flag in ICCR2 to check that the bus is free, and then set the ST bit in ICCR2 to 1 (start condition request). On receiving the request, the IIC issues a start condition. When the IIC detects the start condition, the BBSY and START flags in ICSR2 automatically set to 1, and the ST bit automatically is set to 0. At this time, if the start condition is detected and the levels for the SDA output and the levels on the SDAn line match while the ST bit is 1, the IIC recognizes that issuance of the start condition as requested by the ST bit is successfully complete, and the MST and TRS bits in ICCR2 automatically set to 1, placing the IIC in master transmit mode. The TDRE flag in ICSR2 also automatically is set to 1 in response to the setting of the TRS bit to 1.
3. Check that the TDRE flag in ICSR2 is 1, and then write the value for transmission (the first byte indicates the slave address and value of the R/W# bit) to ICDRT. When the transmit data is written to ICDRT, the TDRE flag automatically is set to 0, the data is transferred from ICDRT to ICDRS, and the TDRE flag again is set to 1. When the byte containing the slave address and R/W# bit is transmitted, the value of the ICCR2.TRS bit automatically updates to select transmit or receive mode based on the value of the transmitted R/W# bit. If the value of the R/W# bit is 1, the TRS bit is set to 0 on the rising edge of the ninth cycle of the SCL clock, placing the IIC in master receive mode. At this time, the TDRE flag is set to 0 and the ICSR2.RDRF flag automatically is set to 1.
   Because the ICSR2.NACKF flag being 1 at this time indicates that no slave device recognized the address or there was an error in communications, write 1 to the ICCR2.SP bit to issue a stop condition.
   For master reception from a device with a 10-bit address, start by using master transmission to issue the 10-bit address, and then issue a restart condition. After that, transmitting 11110b, the two higher-order bits of the slave address, and the R bit places the IIC in master receive mode.
4. Dummy read ICDRR after confirming that the RDRF flag in ICSR2 is 1. This makes the IIC start output of the SCL clock and start data reception.

5. After 1 byte of data is received, the RDRF flag in ICSR2 is set to 1 on the rising edge of the 8th or 9th cycle of the SCL clock, as selected in the RDRFS bit in ICMR3. Reading ICDRR at this time produces the received data, and the RDRF flag is automatically set to 0 at the same time. Additionally, the value of the acknowledgment field received during the ninth cycle of the SCL clock is returned as the value set in the ICMR3.ACKBT bit. If the next byte to be received is the second-to-last byte, set the ICMR3.WAIT bit to 1 for wait insertion before reading ICDRR, containing the second-to-last byte. In addition to enabling NACK output, even when interrupts or other operations result in delays in setting the ICMR3.ACKBT bit to 1 (NACK) in step (6), this fixes the SCLn line to the low level on the rising edge of the ninth clock cycle in reception of the last byte, which enables the issuing of a stop condition.
6. When the ICMR3.RDRFS bit is 0, and the slave device must be notified that it is to end transfer for data reception after transfer of the next and final byte, set the ICMR3.ACKBT bit to 1 (NACK).
7. After reading the second-to-last byte from the ICDRR register, if the value of the ICSR2.RDRF flag is 1, write 1 to the SP bit in ICCR2 (stop condition requested), and then read the last byte from ICDRR. When ICDRR is read, the IIC is released from the wait state and issues the stop condition after low-level output in the ninth clock cycle is complete or the SCLn line is released from the low-hold state.
8. On detecting the stop condition, the IIC automatically sets the MST and TRS bits in ICCR2 to 00b and enters slave receive mode. Additionally, detection of the stop condition sets the ICSR2.STOP flag to 1.
9. Check that the ICSR2.STOP flag is 1, then set the ICSR2.NACKF and STOP flags to 0 for the next transfer operation.

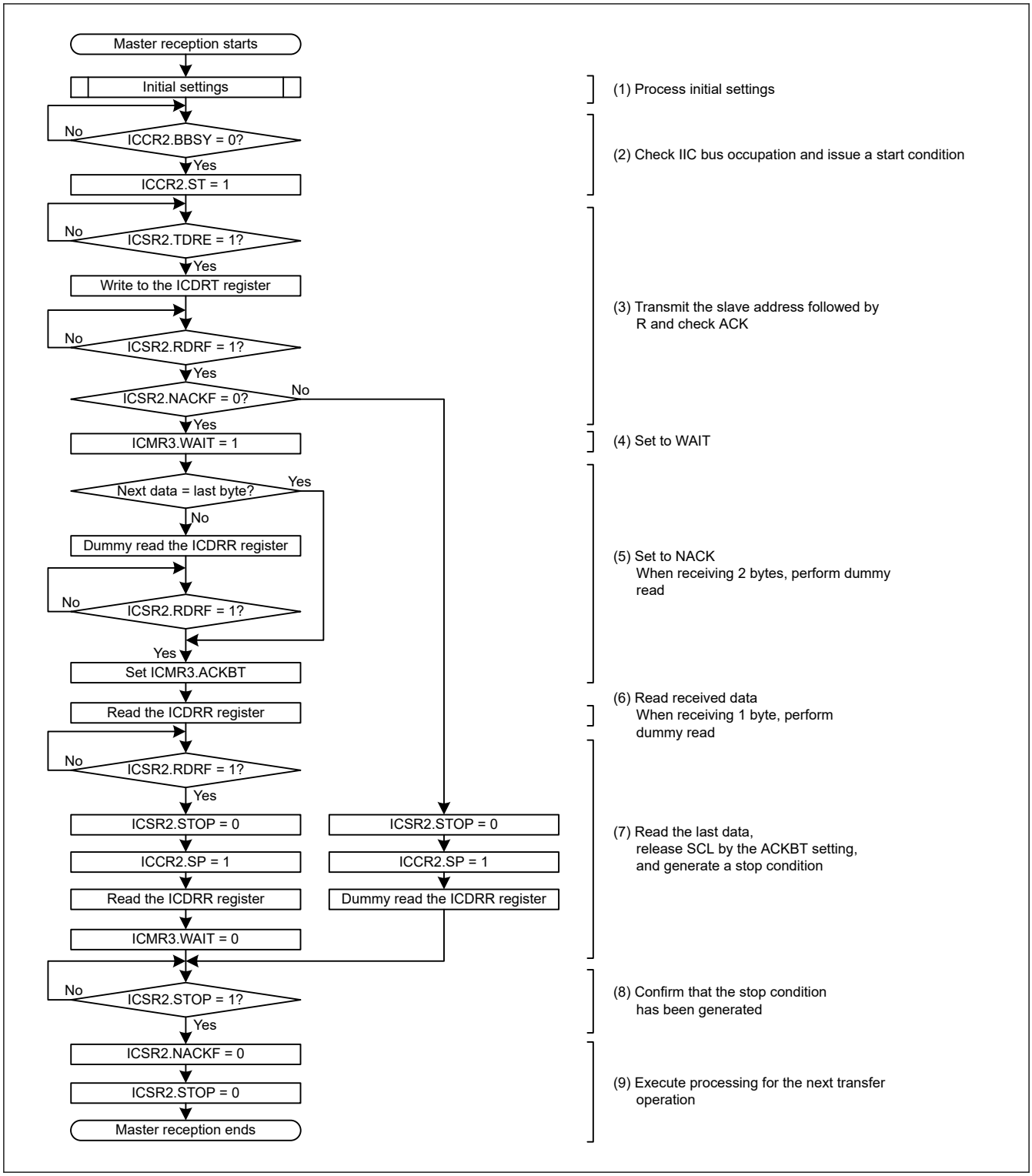

Figure 27.10 Example master reception flow with 7-bit address format of 1 byte or 2 bytes

Figure 27.11 Example master reception flow with 7-bit address format of 3 or more bytes

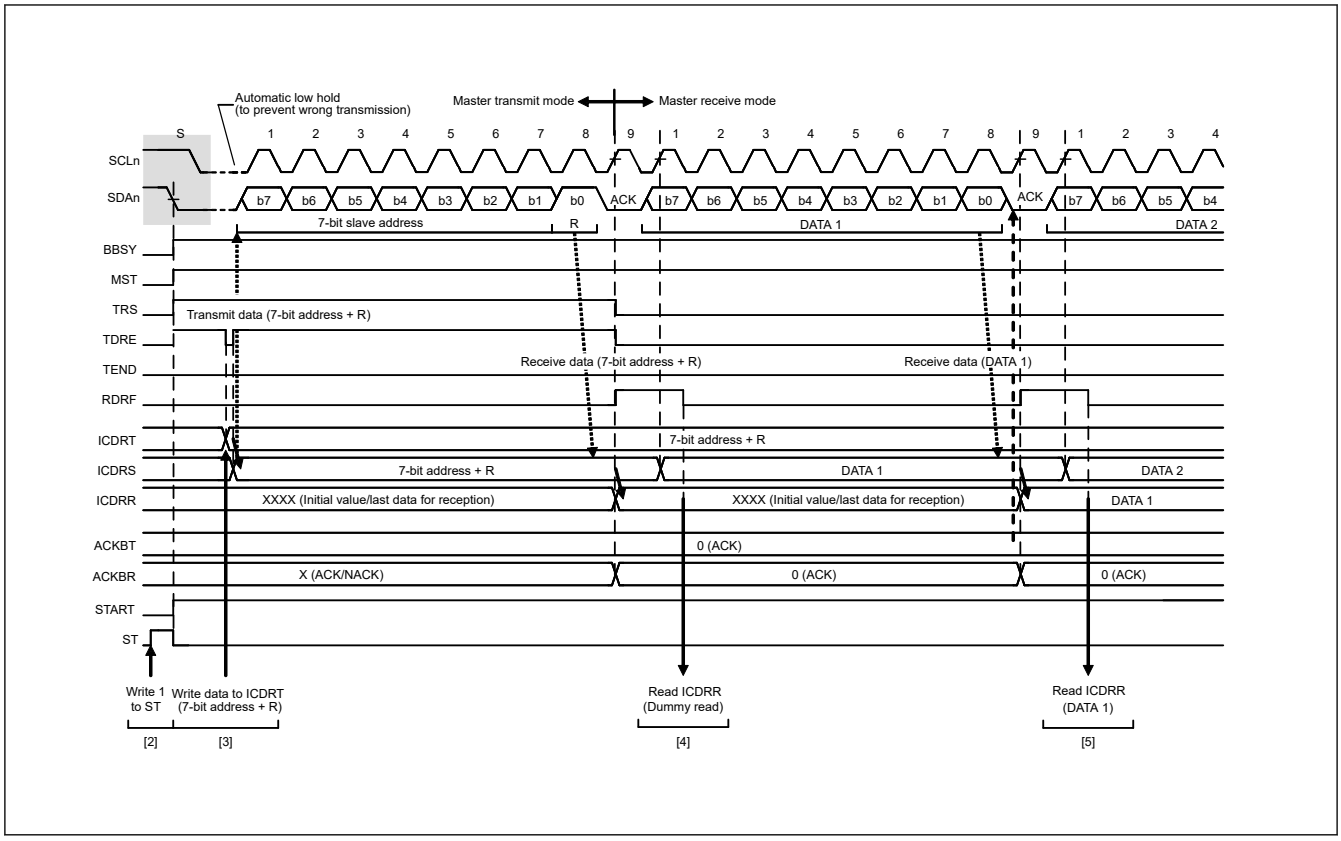

Figure 27.12 Master receive operation timing (1) with 7-bit address format when RDRFS = 0

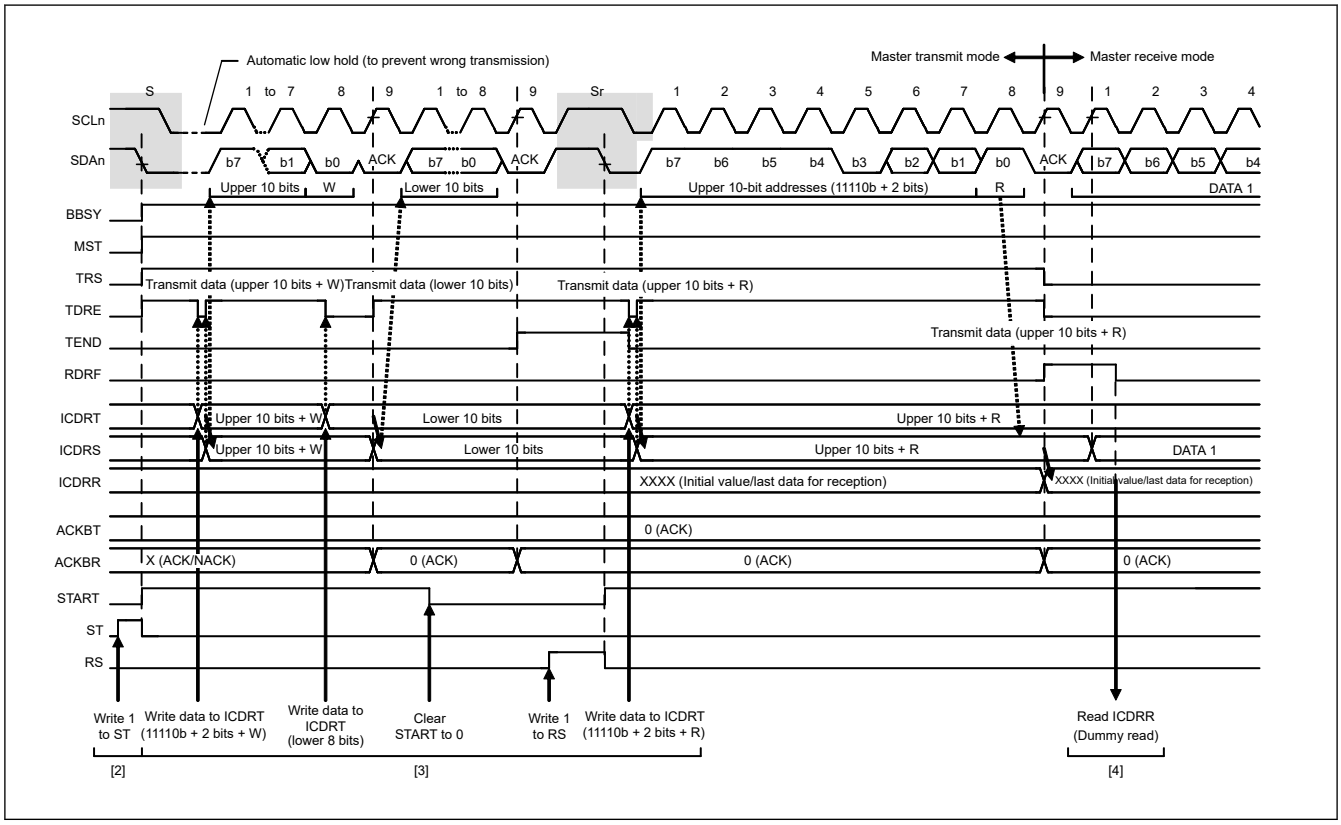

Figure 27.13 Master receive operation timing (2) with 10-bit address format when RDRFS = 0

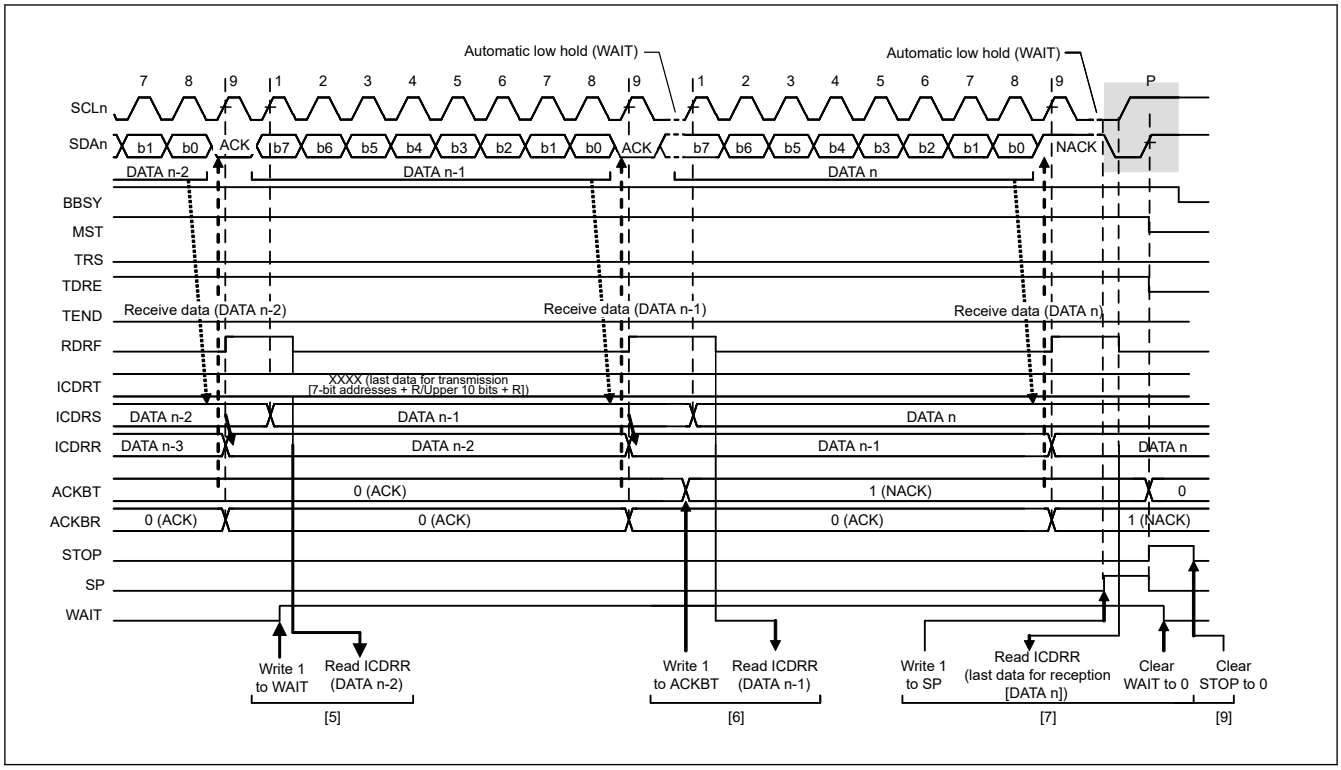

Figure 27.14 Master receive operation timing (3) when RDRFS = 0

27.3.5 Slave Transmit Operation

In slave transmit operation, the master device outputs the SCL clock, the IIC transmits data as a slave device, and the master device returns acknowledgments.

Figure 27.15 shows an example of slave transmission, and Figure 27.16 and Figure 27.17 show the operation timing in slave transmission.

To set up and perform slave transmission:

1. Initialize the IIC using the procedure in section 27.3.2. Initial Settings.
   After initialization, the IIC stays in the standby state until it receives a slave address that matches.
2. After receiving a matching slave address, the IIC sets one of the associated ICSR1.HOA, GCA, and AASy flags (y = 0 to 2) to 1 on the rising edge of the ninth cycle of the SCL clock and outputs the value set in the ICMR3.ACKBT bit to the acknowledge bit on the ninth cycle of the SCL clock. If the value of the R/W# bit is 1, the IIC automatically places itself in slave transmit mode by setting both the ICCR2.TRS bit and the ICSR2.TDRE flag to 1.
3. Check that the ICSR2.TDRE flag is 1, then write the transmit data to the ICDRT register. If the IIC receives no acknowledge from the master device (receives an NACK signal) while the ICFER.NACKE bit is 1, the IIC suspends transfer of the next data.
4. Wait until the ICSR2.TEND flag is set to 1 while the ICSR2.TDRE flag is 1, after the ICSR2.NACKF flag is set to 1 or the last byte for transmission is written to the ICDRT register. When the ICSR2.NACKF flag or the TEND flag is 1, the IIC drives the SCLn line low on the ninth falling edge of the SCL clock.
5. When the ICSR2.NACKF or ICSR2.TEND flag is 1, dummy read ICDRR to complete the processing. This releases the SCLn line.
6. On detecting the stop condition, the IIC automatically sets the ICSR1.HOA, GCA, and AASy flags (y = 0 to 2), the ICSR2.TDRE and TEND flags, and the ICCR2.TRS bit to 0, and enters slave receive mode.
7. Check that the ICSR2.STOP flag is 1, then set the ICSR2.NACKF and STOP flags to 0 for the next transfer operation.

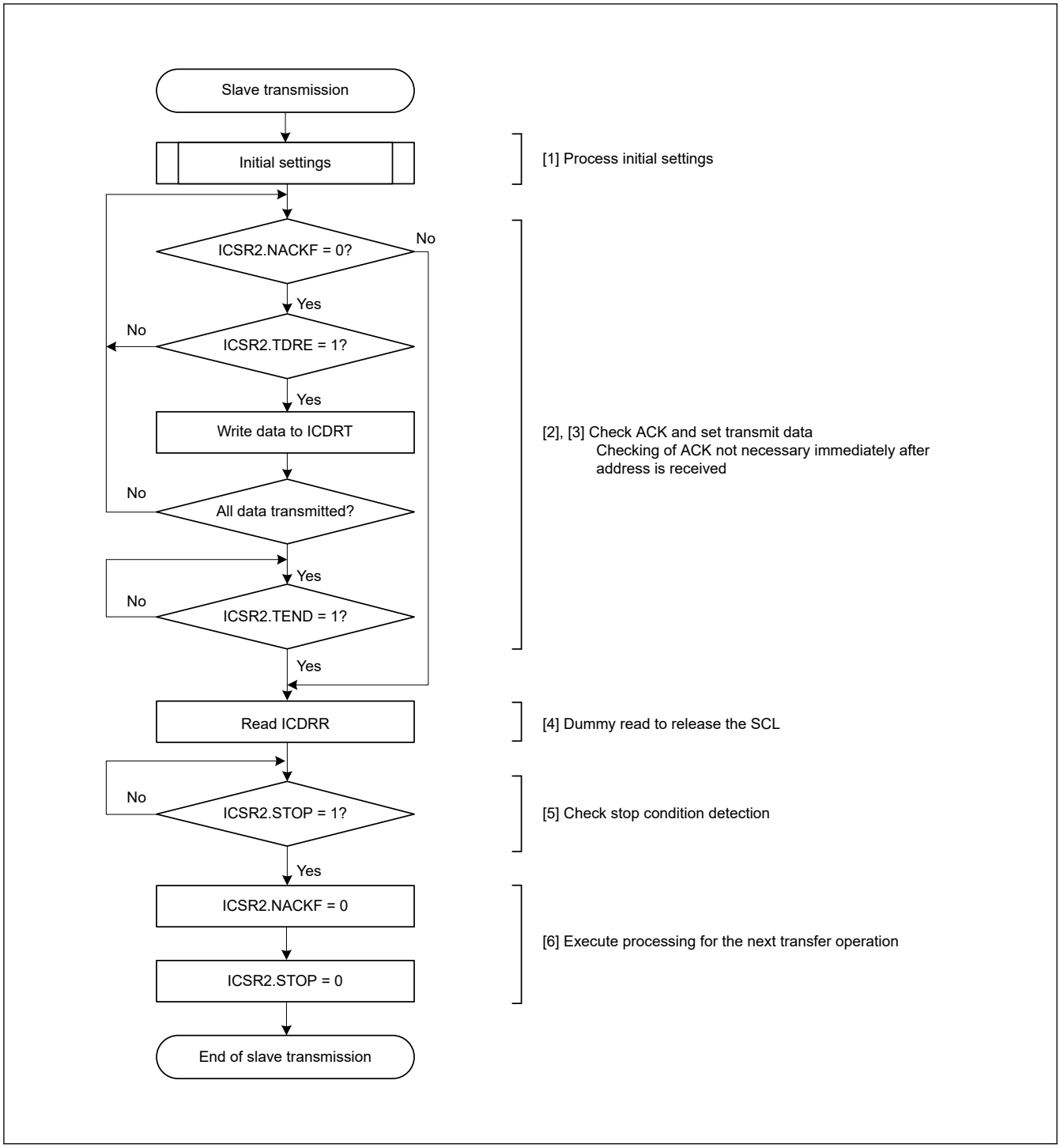

Figure 27.15 Example slave transmission flow

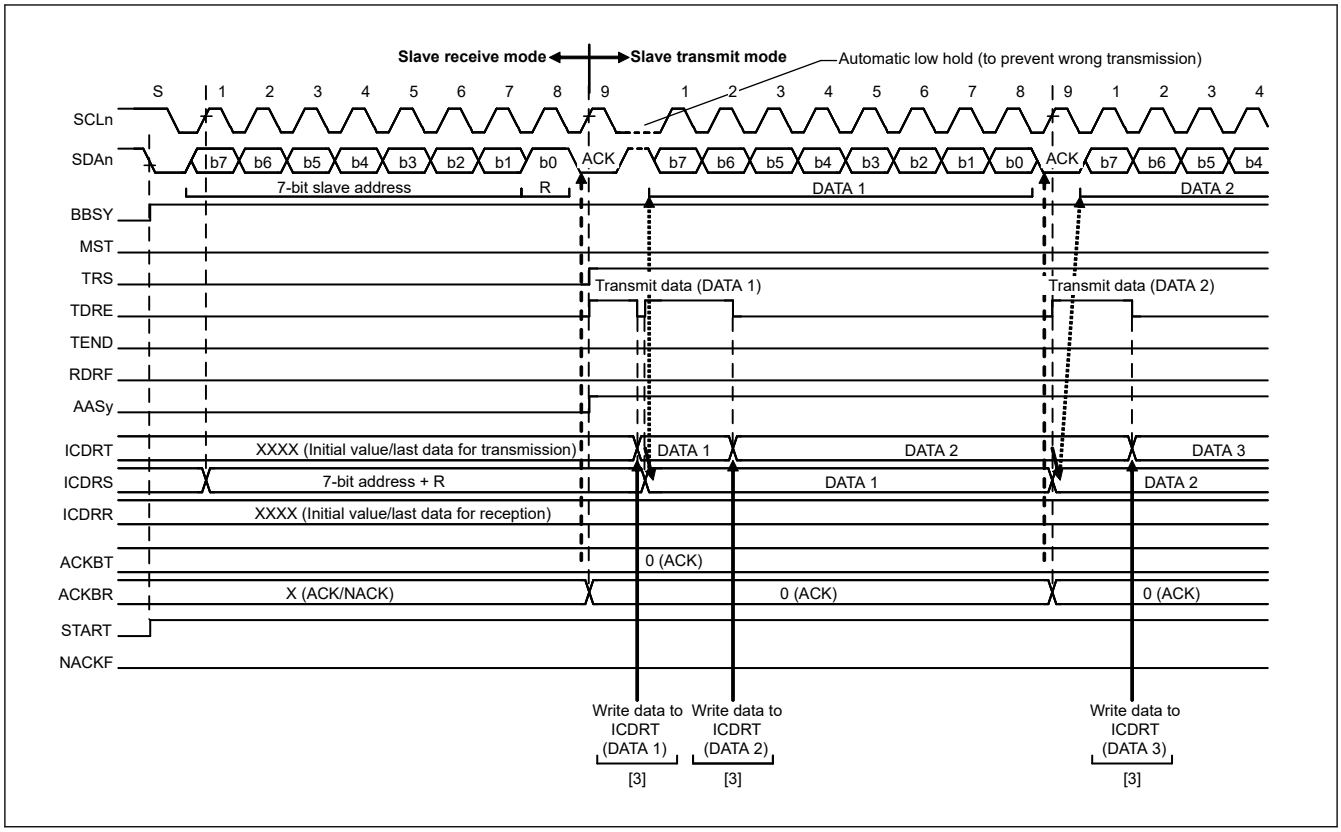

Figure 27.16 Slave transmit operation timing (1) with 7-bit address format

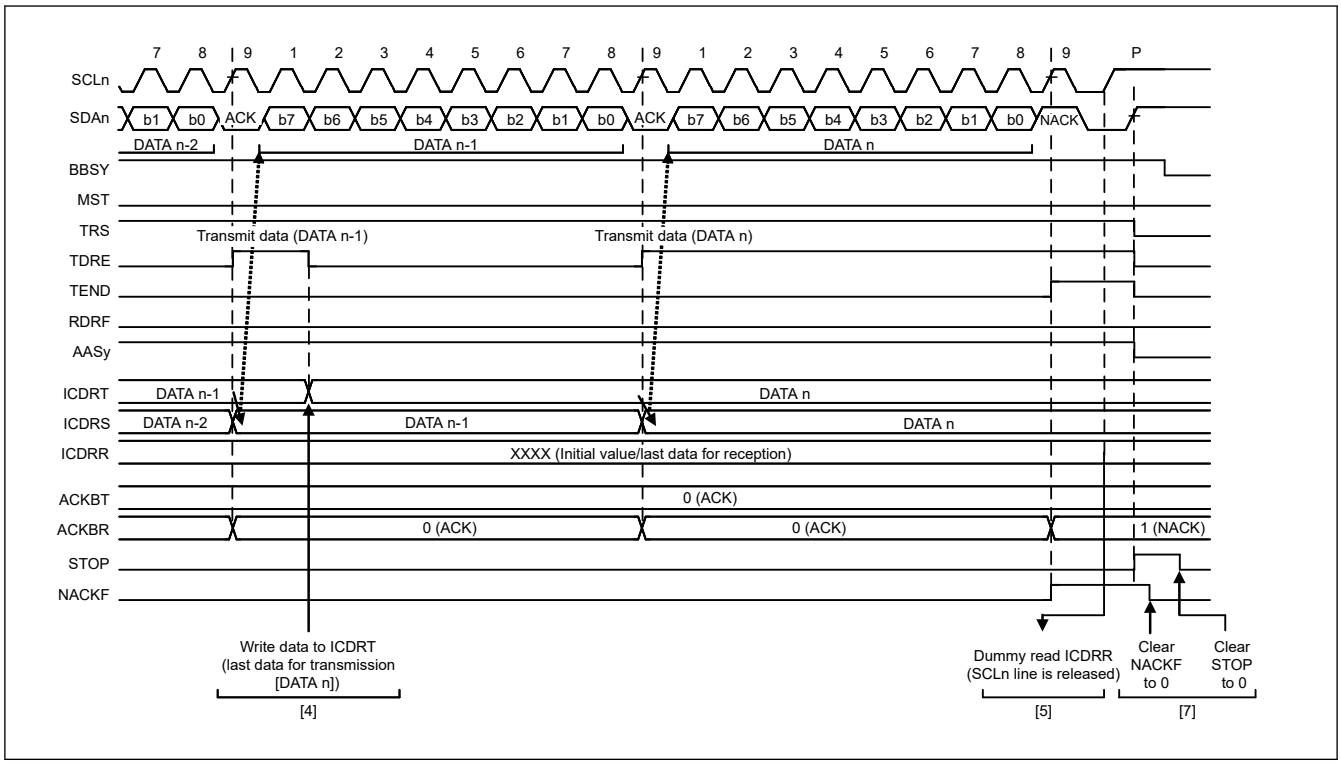

Figure 27.17 Slave transmit operation timing (2)

27.3.6 Slave Receive Operation

In slave receive operation, the master device outputs the SCL clock and transmit data, and the IIC returns acknowledgments as a slave device.

Figure 27.18 shows an example of slave reception, and Figure 27.19 and Figure 27.20 show the operation timing in slave reception.

To set up and perform slave reception:

1. Initialize the IIC using the procedure in section 27.3.2. Initial Settings.
   After initialization, the IIC stays in the standby state until it receives a slave address that matches.
2. After receiving a matching slave address, the IIC sets one of the associated ICSR1.HOA, GCA, and AASy flags (y = 0 to 2) to 1 on the rising edge of the ninth cycle of the SCL clock and outputs the value set in the ICMR3.ACKBT bit to the acknowledge bit on the ninth cycle of the SCL clock. If the value of the R/W# bit is 0, the IIC continues to place itself in slave receive mode and sets the RDRF flag in ICSR2 to 1.
3. Check that the ICSR2.STOP flag is 0 and the ICSR2.RDRF flag is 1, then dummy read ICDRR. The dummy value consists of the slave address and R/W# bit when the 7-bit address format is selected, or the lower 8 bits when the 10-bit address format is selected.
4. When ICDRR is read, the IIC automatically sets the ICSR2.RDRF flag to 0. If reading of ICDRR is delayed and a next byte is received while the RDRF flag is still set to 1, the IIC holds the SCLn line low at the SCL clock one cycle before the point where the RDRF is set. In this case, reading ICDRR releases the SCLn line from being held low.
   When the ICSR2.STOP flag is 1 and the ICSR2.RDRF flag is also 1, read ICDRR until all the data is completely received.
5. On detecting the stop condition, the IIC automatically clears the ICSR1.HOA, GCA, and AASy flags (y = 0 to 2) to 0.
6. Check that the ICSR2.STOP flag is 1, then set the ICSR2.STOP flag to 0 for the next transfer operation.

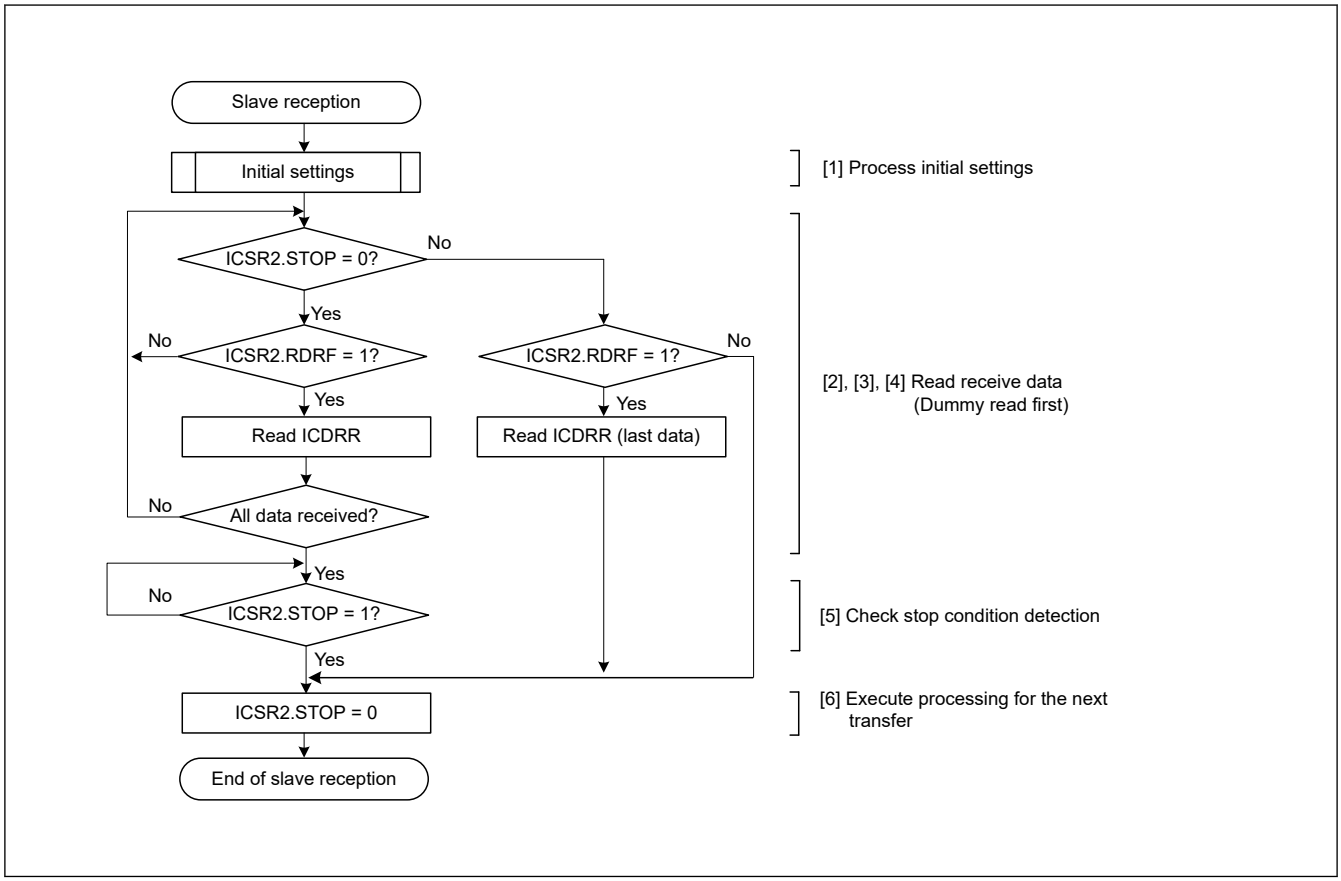

Figure 27.18 Example slave reception flow

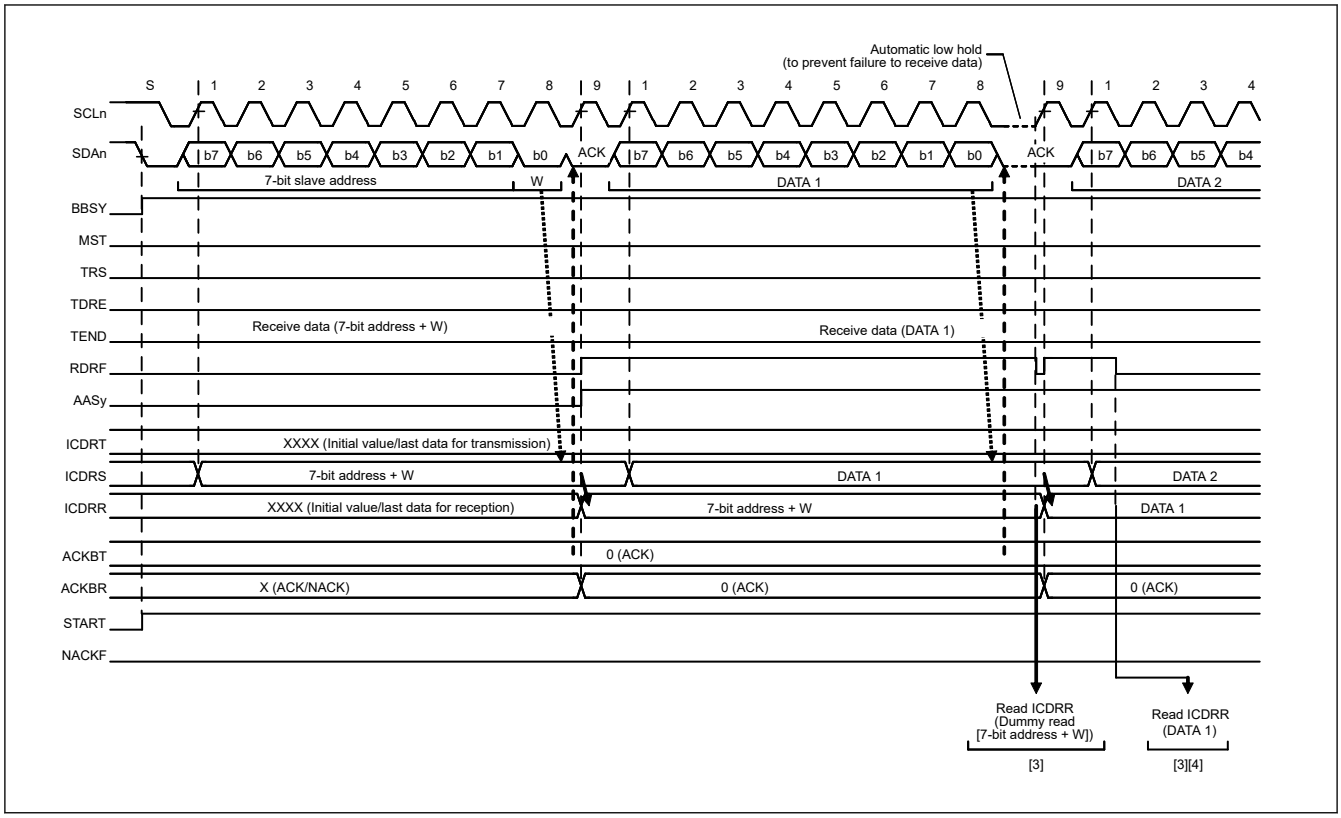

Figure 27.19 Slave receive operation timing (1) with 7-bit address format when RDRFS = 0

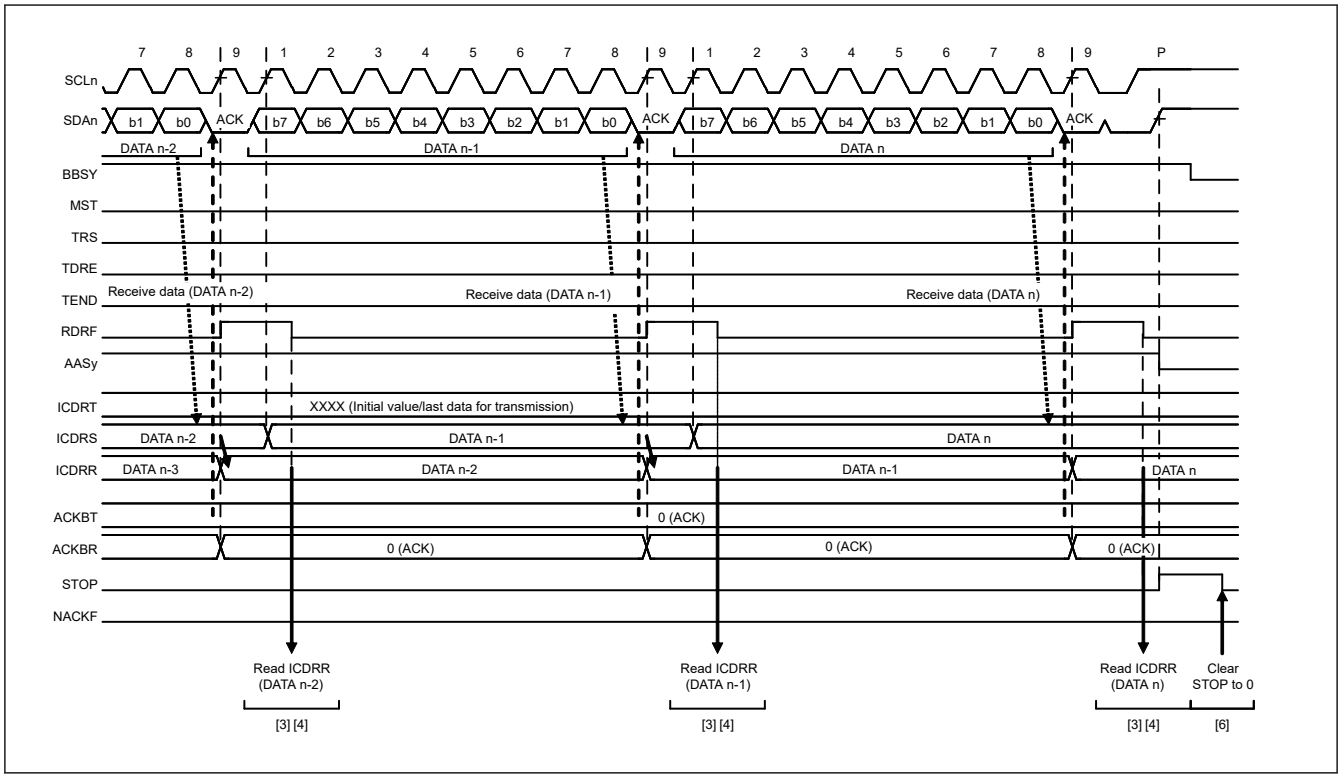

Figure 27.20 Slave receive operation timing (2) when RDRFS = 0

27.4 SCL Synchronization Circuit

For generation of the SCL clock, the IIC starts counting the value for the high-level period specified in ICBRH when it detects a rising edge on the SCLn line, and it drives the SCLn line low when it completes counting. When the IIC detects

the falling edge of the SCLn line, it starts counting the value for the low-level period specified in ICBRL, and then it stops driving the SCLn line, releasing the line, when it completes counting. The IIC repeats this process to generate the SCL clock.

If multiple master devices are connected to the I^2C bus, a collision of SCL signals might arise because of contention with another master device. In such cases, the master devices must synchronize their SCL signals. Because this synchronization of SCL signals must be bit-by-bit, the IIC is equipped with an SCL synchronization circuit to obtain bit-by-bit synchronization of the SCL clock signals by monitoring the SCLn line while in master mode.

When the IIC detects a rising edge on the SCLn line and starts counting the high-level period specified in ICBRH.BRH[4:0], and the level on the SCLn line falls because an SCL signal is being generated by another master device, the IIC performs the following:

1. Stops counting when it detects the falling edge.
2. Drives the level on the SCLn line low.
3. Starts counting the low-level period specified in ICBRL.BRL[4:0].

When the IIC finishes counting the low-level period, it stops driving the SCLn line low to release the line. If the low-level period of the SCL clock signal from the other master device is longer than the low-level period set in the IIC, the low-level period of the SCL signal is extended. When the low-level period for the other master device ends, the SCL signal rises because the SCLn line is released.

When the IIC finishes outputting the low-level period of the SCL clock, the SCLn line is released and the SCL clock rises. That is, when SCL signals from more than one master are contending, the high-level period of the SCL signal is synchronized with that of the clock with the narrower period, and the low-level period of the SCL signal is synchronized with that of the clock with the broader period. However, such synchronization of the SCL signal is only enabled when the SCLE bit in ICFER is set to 1.

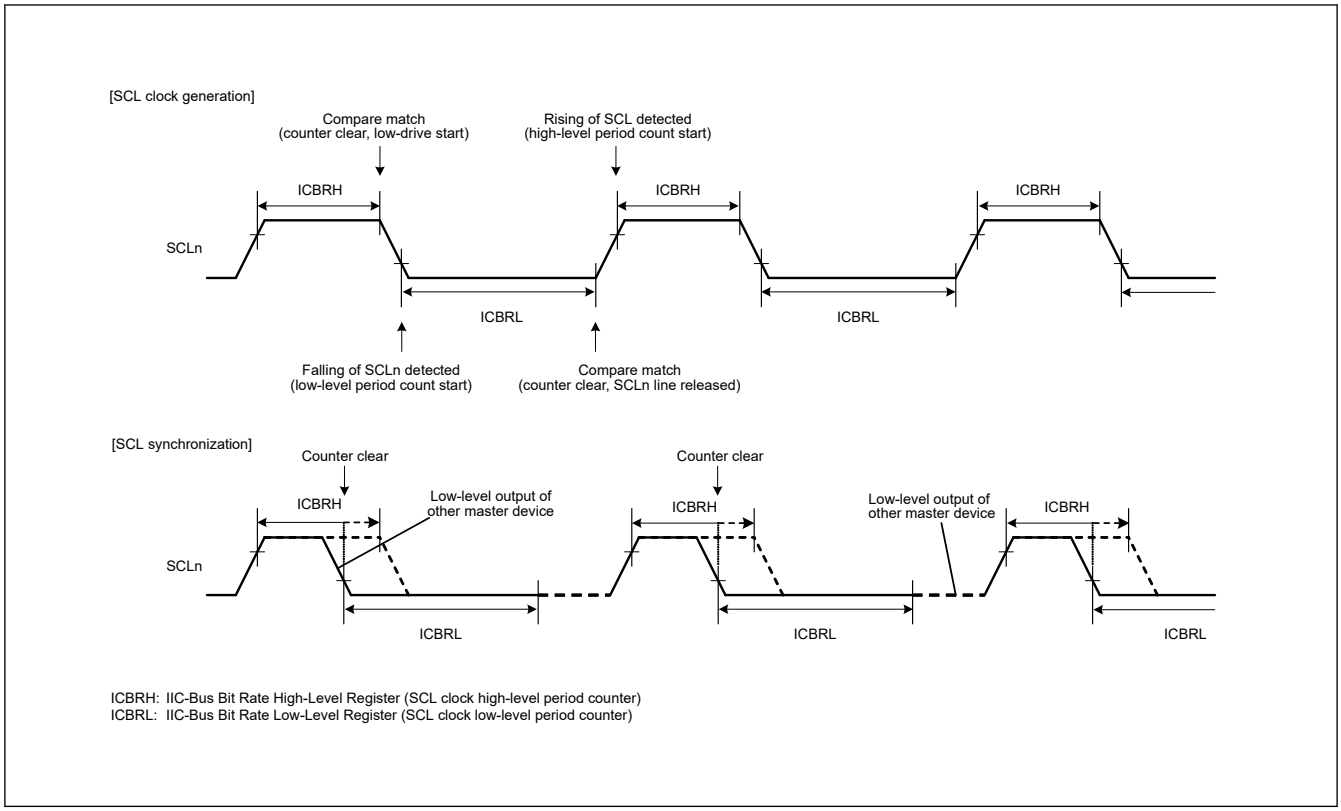

Figure 27.21 Generation and synchronization of SCL signal from IIC

27.5 SDA Output Delay Function

The IIC module incorporates a function for delaying output on the SDA line. The delay can be applied to all output on the SDA line, including issuing of the start, restart, and stop conditions, data, and the ACK and NACK signals.

With this function, SDA output is delayed from the detection of a falling edge of the SCL signal to ensure that the SDA signal is output within the interval during which the SCL clock is low. This approach helps prevent erroneous operation of communications devices, with the aim of satisfying the 300-ns minimum data-hold time requirement of the SMBus specification. The output delay function is enabled by setting the SDDL[2:0] bits in ICMR2 to a value other than 000b, and disabled by setting the same bits to 000b.

When the SDA output delay function is enabled, for example, the DLCS bit in ICMR2 selects the clock source for the SDA output delay counter, either as the internal base clock (IICφ) for the IIC module or as the internal base clock divided by 2 (IICφ/2). The counter counts the number of cycles set in the SDDL[2:0] bits in ICMR2. When the delay cycles count is reached, the IIC module places the required output (start, restart, or stop condition, data, or an ACK or NACK signal) on the SDA line.

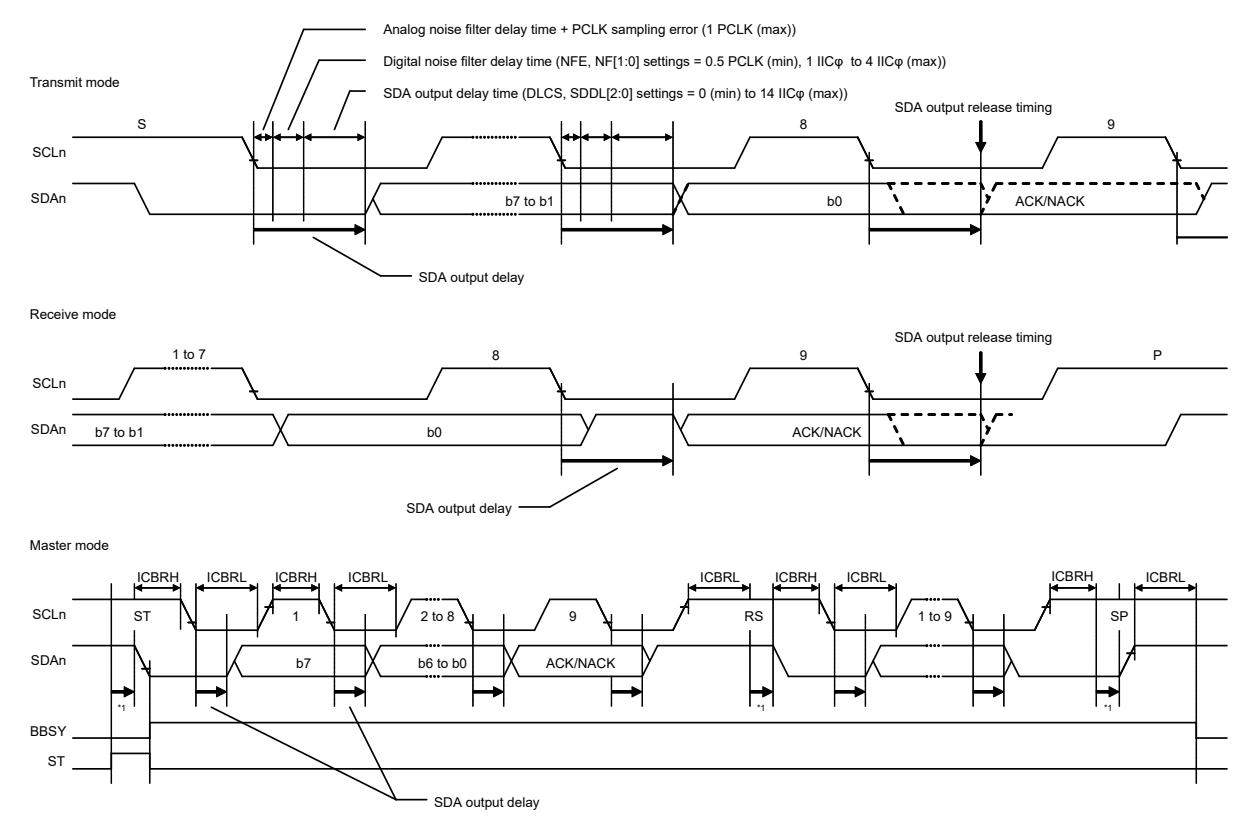

Note: PCLK = PCLKB

Note 1. The output delay function is set by the DLCS and SDDL[2:0] bits when a start (ST), restart (RS), or stop (SP) condition is issued.

Figure 27.22 SDA output delay function

27.6 Digital Noise Filter Circuits

The internal circuitry sees the states of the SCLn and SDAn pins through analog and digital noise-filter circuits. Figure 27.23 shows a block diagram of the digital noise-filter circuit.

The on-chip digital noise-filter circuit of the IIC consists of four flip-flop circuit stages connected in series and a match-detection circuit. The number of valid stages in the digital noise filter is selected in the NF[1:0] bits in ICMR3. The selected number of valid stages determines the noise-filtering capability as a period from 1 to 4 IICφ cycles.

The input signal to the SCLn pin (or SDAn pin) is sampled on falling edges of the IICφ signal. When the input signal level matches the output level of the number of valid flip-flop circuit stages as selected in the NF[1:0] bits in ICMR3, the signal level is seen in the subsequent stage. If the signal levels do not match, the previous value is saved.

If the ratio between the frequency of the internal operating clock (PCLKB) and the transfer rate is small, for example, if data transfer is 400 kbps with PCLKB = 4 MHz, the characteristics of the digital noise filter might lead to the elimination of

required signals as noise. In such cases, it is possible to disable the digital noise-filter circuit by setting the ICFER.NFE bit to 0, and use only the analog noise filter circuit.

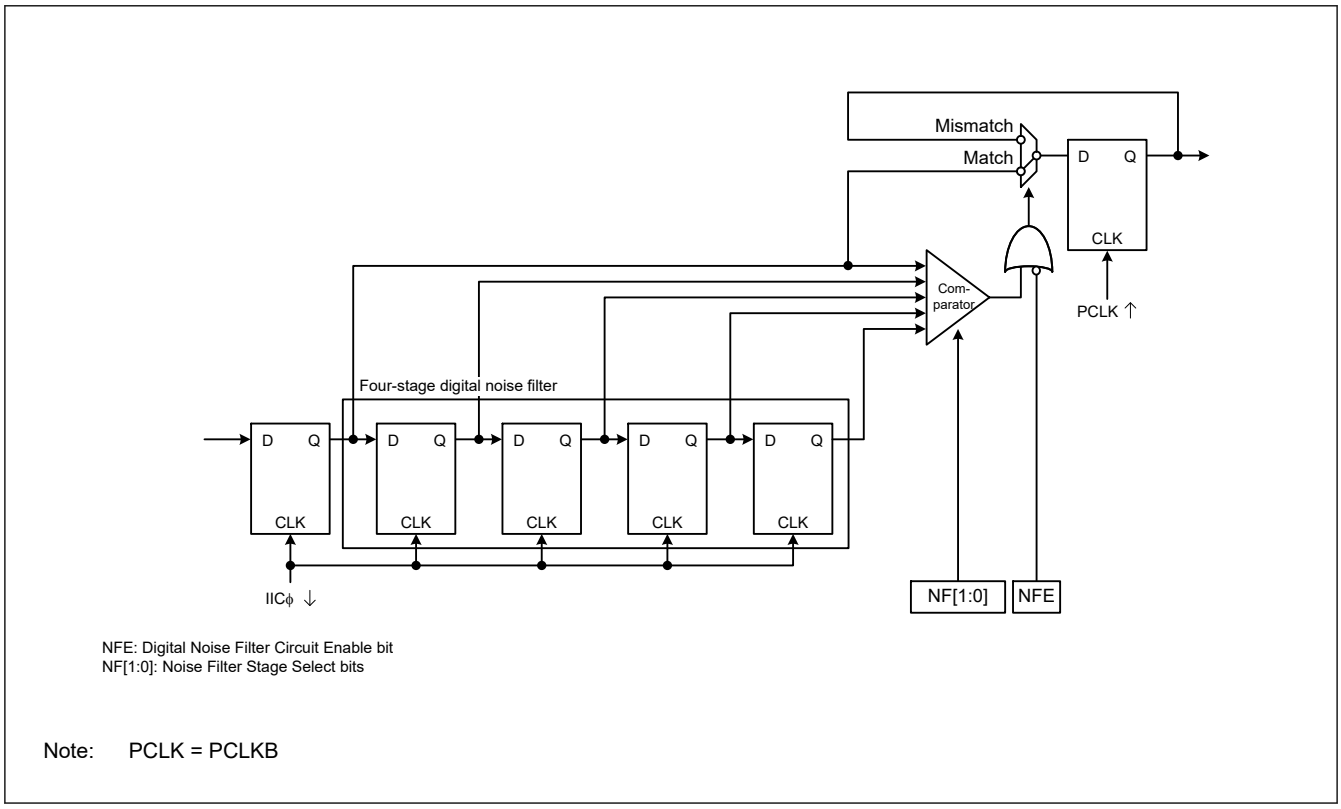

Figure 27.23 Digital noise filter circuit block diagram

27.7 Address Match Detection

The IIC can set three unique slave addresses in addition to the general call address and host address. The slave addresses can be 7-bit or 10-bit slave addresses.

27.7.1 Slave-Address Match Detection

The IIC can set three unique slave addresses and has a slave address detection function for each unique slave address. When the SARyE bit (y = 0 to 2) in ICSER is set to 1, the slave addresses set in SARUy and SARLy (y = 0 to 2) can be detected.

When the IIC detects a match of the set slave address, the associated AASy flag (y = 0 to 2) in ICSR1 is set to 1 on the rising edge of the ninth SCL clock cycle, and the RDRF flag in ICSR2 or the TDRE flag in ICSR2 is set to 1 by the subsequent R/W# bit. This causes a receive data full interrupt (IICn_RXI) or transmit data empty interrupt (IICn_TXI) to be generated. The AASy flag identifies which slave address is specified.

Figure 27.24 to Figure 27.26 show the AASy flag set timing in three cases.

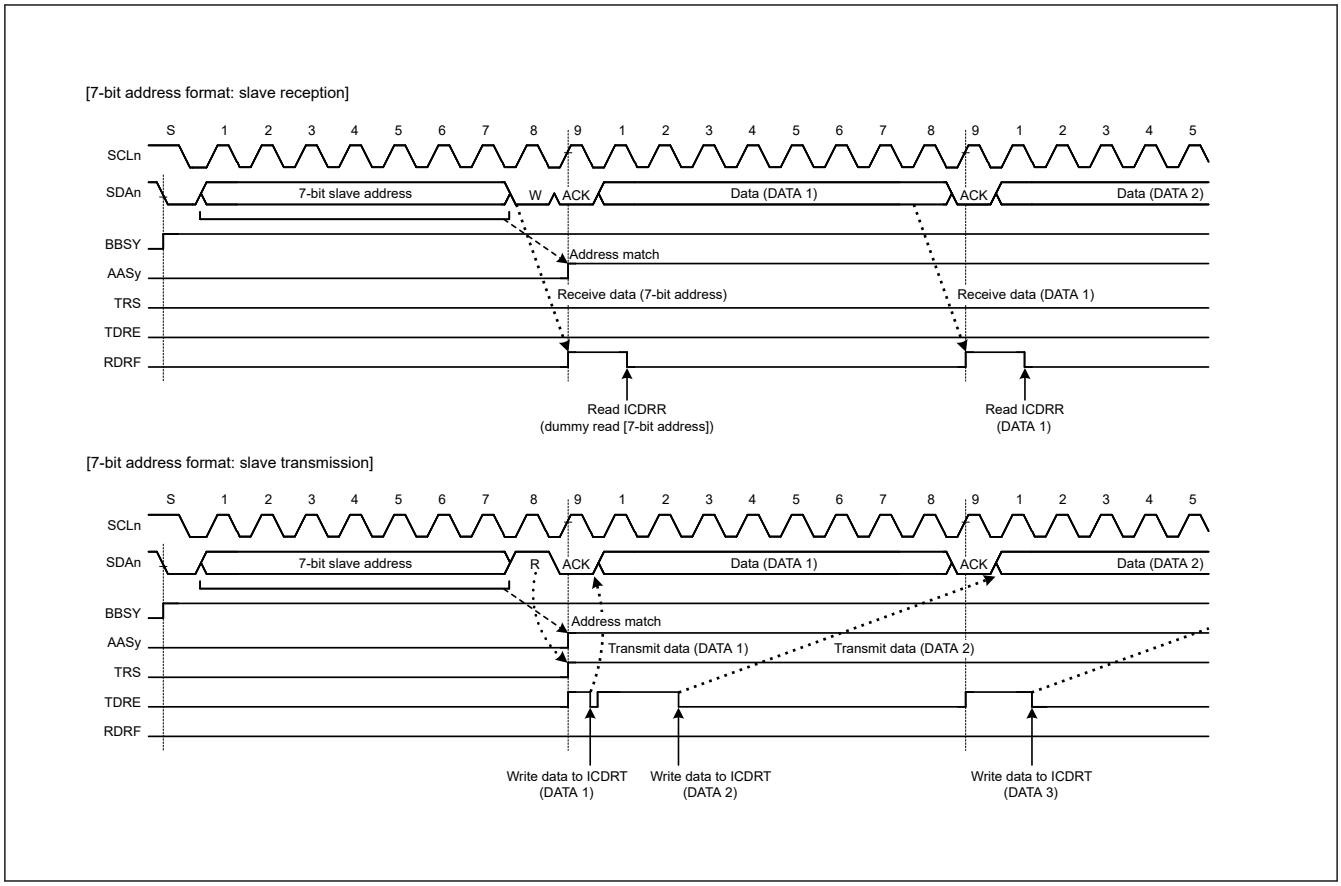

Figure 27.24 AASy flag set timing with 7-bit address format

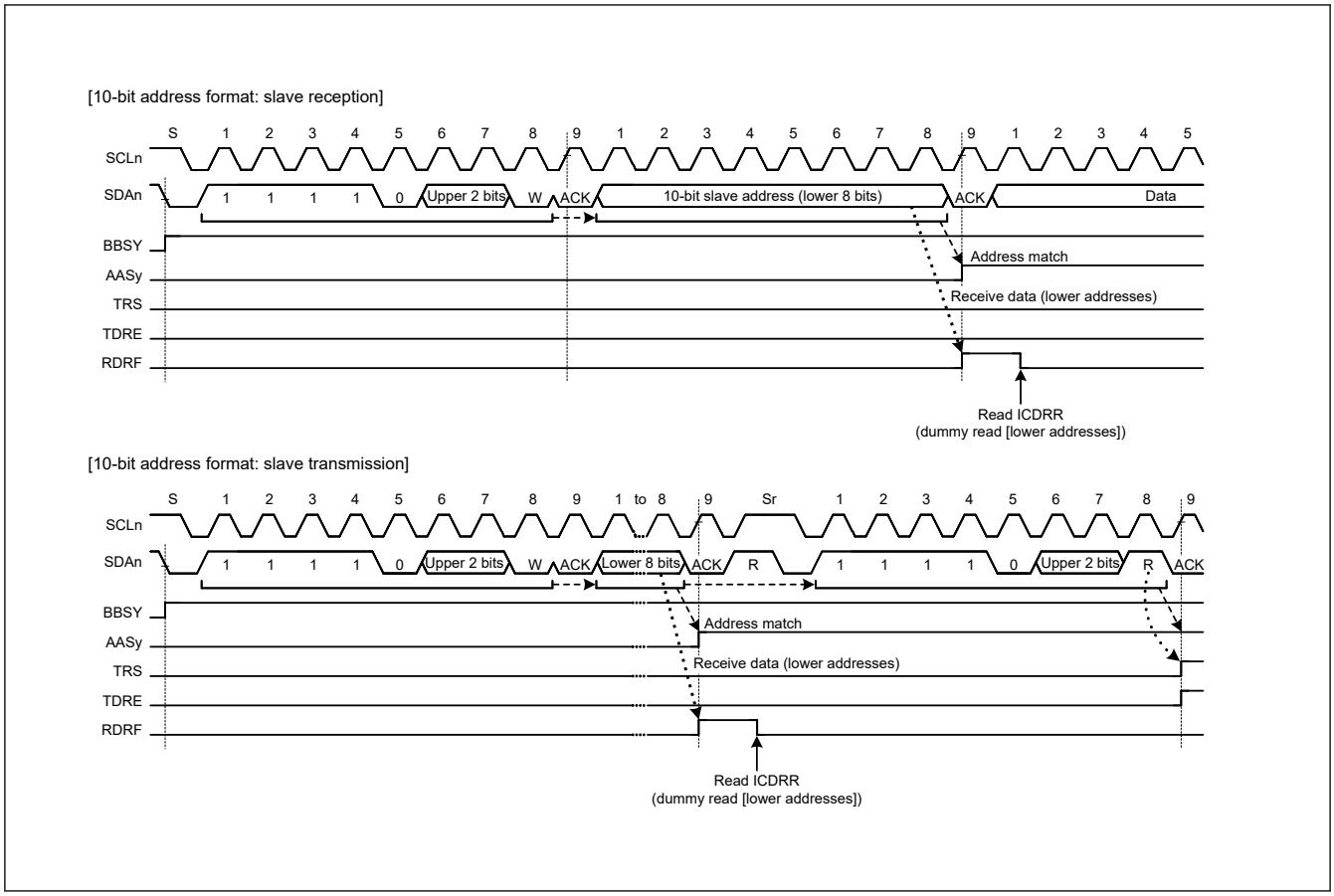

Figure 27.25 AASy flag set timing with 10-bit address format

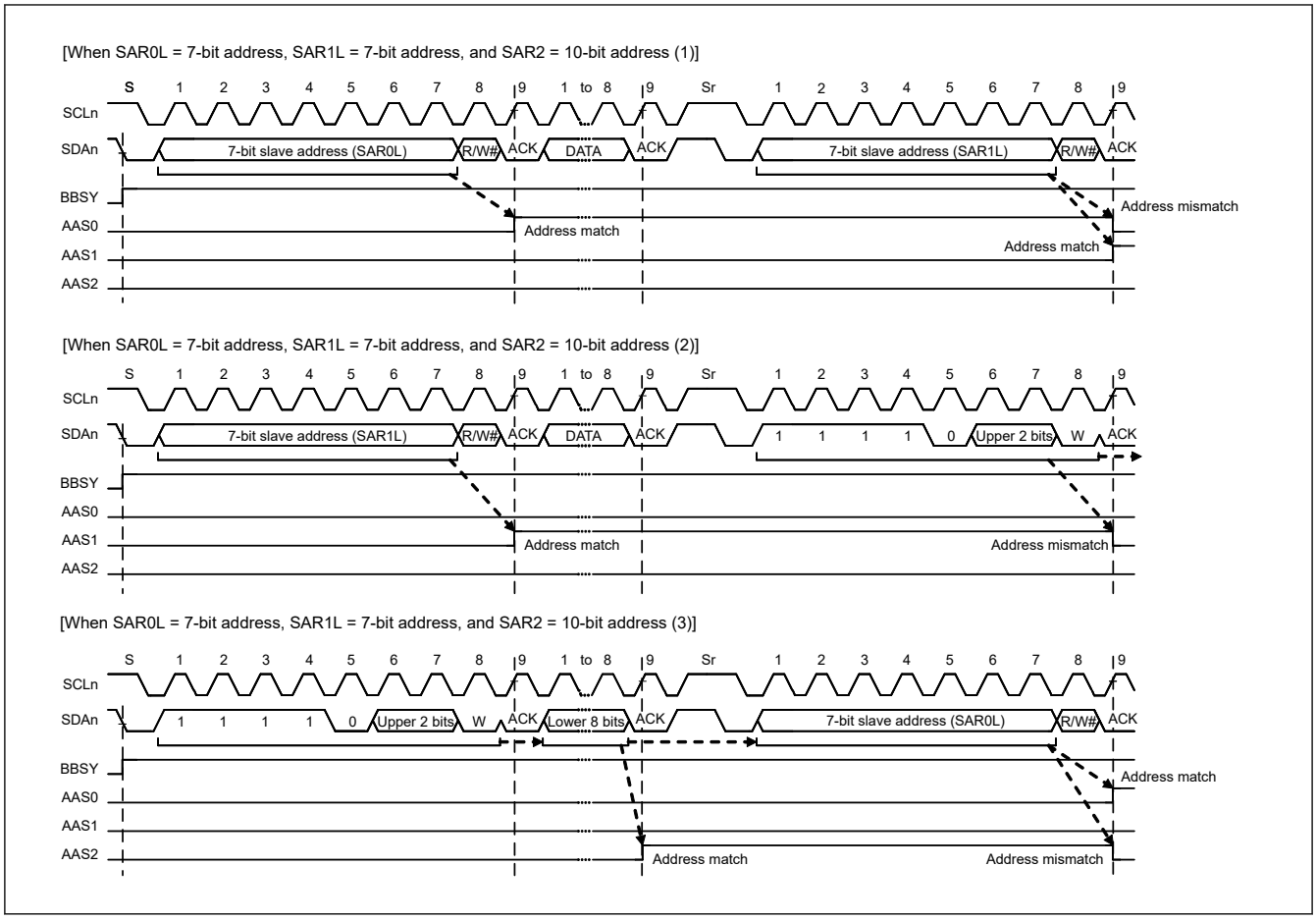

Figure 27.26 AASy flag set and clear timing with mixed 7-bit and 10-bit address formats

27.7.2 Detection of General Call Address

The IIC provides detection of the general call address (0000 000b + 0 [W]). This is enabled by setting the GCAE bit in ICSER to 1.

If the address received after a start or restart condition is issued is 0000 000b + 1[R] (start byte), the IIC recognizes this as the address of a slave device with an all-zero address, but not as the general call address.

When the IIC detects the general call address, both the GCA flag in ICSR1 and the RDRF flag in ICSR2 set to 1 on the rising edge of the ninth cycle of the SCL clock. This leads to the generation of a receive data full interrupt (IICn_RXI). The value of the GCA flag can be checked to confirm that the general call address was transmitted.

Operation after detection of the general call address is the same as normal slave receive operation.

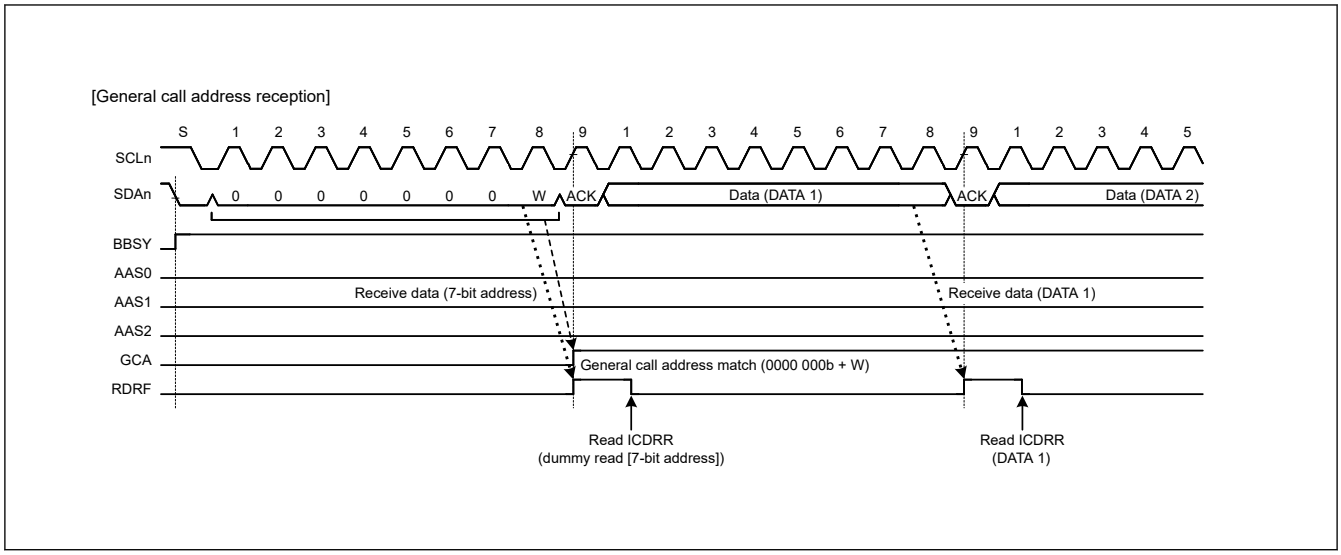

Figure 27.27 Timing of GCA flag setting during reception of general call address

27.7.3 Device-ID Address Detection

The IIC module provides detection of device-ID address compliant with the I^2C bus specification (revision 03). When the IIC receives 1111 100b as the first byte after a start or restart condition is issued with the DIDE bit in ICSER set to 1, it recognizes the address as a device ID, sets the DID flag in ICSR1 to 1 on the rising edge of the ninth SCL clock cycle when the subsequent R/W# bit is 0, then compares the second and subsequent bytes with its own slave address. If the address matches the value in the slave address register, the IIC sets the associated AASy flag (y = 0 to 2) in ICSR1 to 1.

When the first byte received after the issue of a start or restart condition matches the device ID address (1111 100b) again and the subsequent R/W# bit is 1, the IIC does not compare the second and subsequent bytes and sets the ICSR2.TDRE flag to 1.

In the device ID address detection function, the IIC sets the DID flag to 0 if a match with the IIC slave address is not obtained or a match with the device ID address is not obtained after a match with the IIC slave address and a restart condition is not detected. If the first byte after detection of a start or restart condition matches the device ID address (1111 100b), and the R/W# bit is 0, the IIC sets the DID flag to 1 and compares the second and subsequent bytes with the slave address of the IIC. If the R/W# bit is 1, the DID flag holds the previous value and the IIC does not compare the second and subsequent bytes. Therefore, the reception of a device ID address can be checked by reading the DID flag after confirming that TDRE = 1.

Additionally, prepare the device ID fields (3 bytes: 12 bits indicating the manufacturer + 9 bits identifying the part + 3 bits indicating the revision) that must be sent to the host after reception of a continuous device-ID field as normal transmit data. For details on the information that must be included in device ID fields, contact NXP Semiconductors.

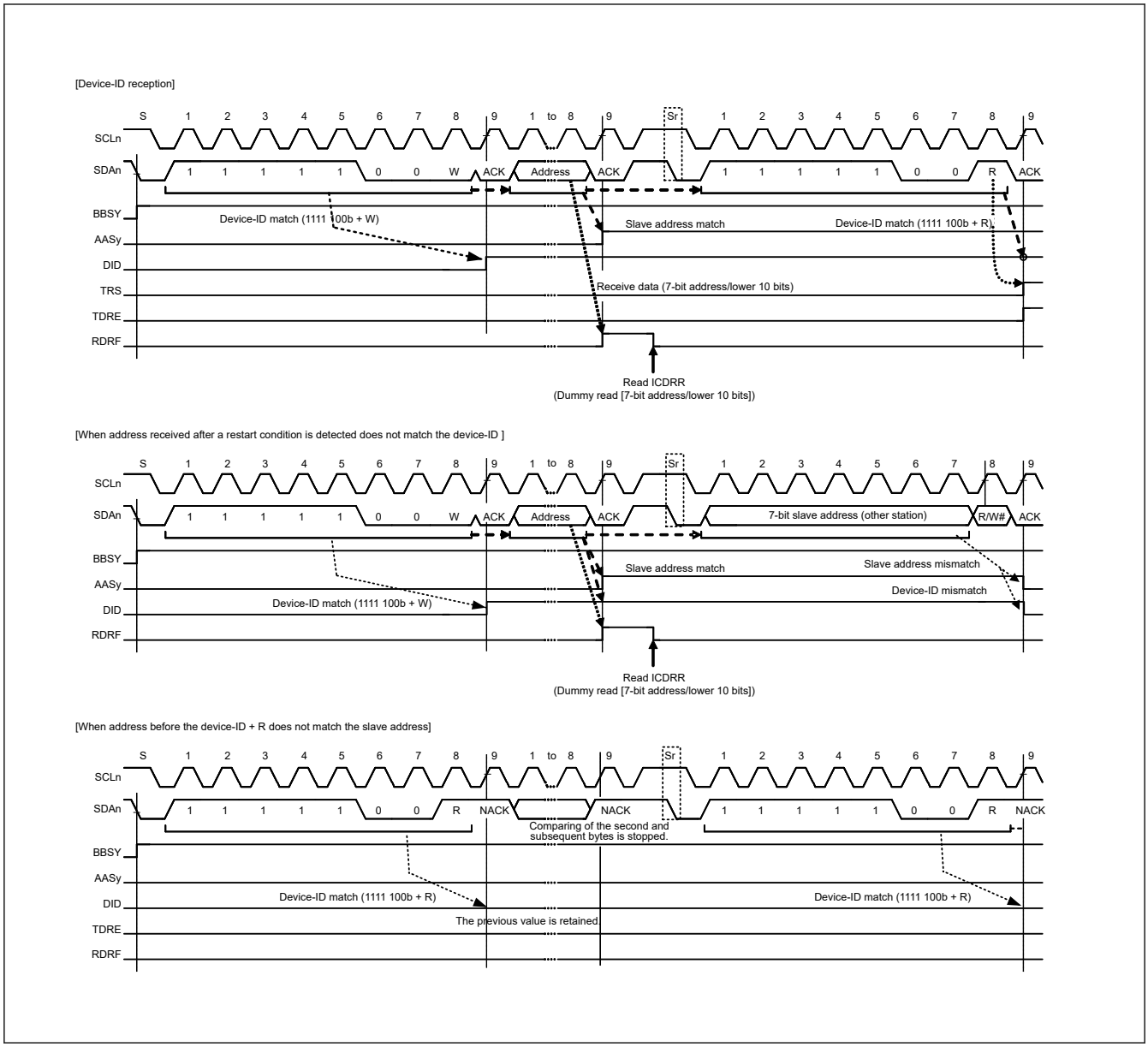

Figure 27.28 AASy and DID flag set and clear timing during reception of device ID

27.7.4 Host Address Detection

The IIC provides host address detection when operating in SMBus. When the HOAE bit in ICSER is set to 1 while the SMBS bit in ICMR3 is 1, the IIC can detect the host address (0001 000b) in slave receive mode (MST and TRS bits = 00b in ICCR2).

When the IIC detects the host address, the HOA flag in ICSR1 is set to 1 on the rising edge of the 9th SCL clock cycle, and at the same time, the RDRF flag in ICSR2 is set to 1 when the R/W# bit is 0 (Wr bit). This causes a receive data full interrupt (IICn_RXI) to be generated. The HOA flag indicates that the host address was sent from another device.

If the bit following the host address (0001 000b) is an Rd bit (R/W# bit = 1), the IIC can also detect the host address. After the host address is detected, the IIC operates in the same manner as in normal slave operation.

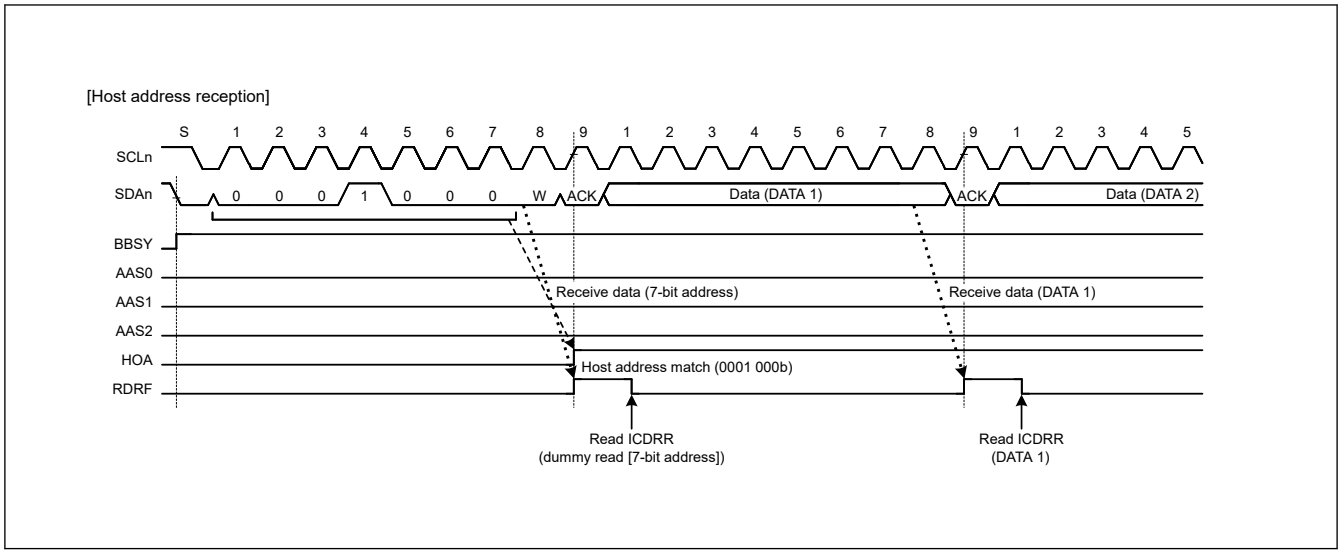

Figure 27.29 HOA flag set timing during reception of host address

27.8 Wakeup Function

The IIC provides a wakeup function that causes the MCU to transition from Software Standby mode or Snooze mode to normal operation. The wakeup function enables the reception of data when the system clock (PCLKB) is stopped, and generates a wakeup interrupt signal on a match of the slave address of the received data. This wakeup interrupt signal triggers the return to normal operation. After the wakeup interrupt occurs, switch the IIC to PCLKB synchronous operation so that communication can continue.

The wakeup function has four operation modes:

- Normal wakeup mode 1
- Normal wakeup mode 2
- Command recovery mode
- EEP response mode

Table 27.9 describes the behavior in these modes.

Table 27.9 Wakeup operation modes

Operation mode	ACK response timing	ACK response before wakeup to PCLKB synchronous operation	SCL state during wakeup to PCLKB synchronous operation
Normal wakeup mode 1	Before wakeup to PCLKB synchronous operation*1	ACK	Fixed low
Normal wakeup mode 2	After wakeup to PCLKB synchronous operation*2	Before wakeup: no response (NACK level retained) After wakeup: ACK response	Fixed low
Command recovery mode	Before wakeup to PCLKB synchronous operation*1	ACK	Open
EEP response mode	Before recovery to PCLKB synchronous operation*1	NACK	Open

Note 1. Switching timing from PCLKB asynchronous operation to PCLKB synchronous operation is the falling edge of the 9th clock of the SCL.
Note 2. Switching timing from PCLKB asynchronous operation to PCLKB synchronous operation is the falling edge of the 8th clock of the SCL.

The following can be selected as wakeup interrupt sources:

- Host address detection (valid when ICSER.HOAE = 1)
- General call address detection (valid when ICSER.GCAE = 1)
- Slave address 0*1 detection (valid when ICSER.SAR0E = 1)

- Slave address 1[*1] detection (valid when ICSER.SAR1E = 1)
- Slave address 2[*1] detection (valid when ICSER.SAR2E = 1)

Note 1. Only 7-bit address can be set. Set the FS bit in SARUy (y = 0 to 2) to 0.

Precautions on the use of the wakeup function

- Do not change the content of the IIC registers except the ICIER register and WUSEN bit in ICWUR2 while the WUASYF flag in ICWUR2 is 1 (during PCLKB asynchronous operation).
- Set ICWUR.WUE and ICWUR.WUIE to 1, and ICCR2.MST and ICCR2.TRS to 0 (slave reception mode) before switching to PCLKB asynchronous mode.
- The device ID and the 10-bit slave address cannot be selected for the wakeup interrupt source. Set the DIDE bit in ICSER and FS bit in SARUy (y = 0 to 2) to 0.
- Set bits TIE, TEIE, RIE, NAKIE, SPIE, STIE, ALIE, and TMOIE in the ICIER register to 0 (interrupt disabled) after switching to PCLKB asynchronous operation (ICWUR2.WUASYF = 1).
- When the wakeup function is enabled, do not use the timeout function (ICWUR.WUE = 1)
- Even when a wakeup interrupt is generated during PCLKB asynchronous operation (when ICWUR2.WUASYF = 1), if the slave addresses match in PCLKB synchronous mode (ICWUR2.WUASYF = 0), the wakeup interrupt does not occur and the WUF flag is not set.
- If the timing of writing 0 to the ICWUR2.WUSEN bit and the timing of detecting a start condition conflict, the IIC might start the next reception in PCLKB synchronous operation mode. In this case, ICWUR2.WUASYF flag becomes 1 (switch to PCLKB asynchronous mode) when data communication is complete, a stop condition is detected, and detection of a wakeup event starts.
- After writing 0 to the WUSEN bit in ICWUR2, do not change registers relate to the IIC operation mode setting (ICMR3, ICSER, and SARLy) until the mode is switched to PCLKB asynchronous operation from PCLKB synchronous operation (while the ICWUR2.WUASYF flag is 1). If the register value changes during this period by an interrupt handling or another factor, the IIC might malfunction before switching to the asynchronous operation.

27.8.1 Normal Wakeup Mode 1

This section describes the behavior, the timing, and an example operation of normal wakeup mode 1.

In normal wakeup mode 1, a wakeup interrupt triggered by the match of the slave address initiates the transition to normal operation as follows:

Before wakeup:	ACK is sent in response to the data received with its own slave address of the IIC.
During wakeup:	ACK response is made on the 9th clock cycle of SCL, after which SCL is held low[*1].
After wakeup:	Normal operation continues.

Note 1. Between the 9th clock cycle and 1st clock cycle during wakeup, WAIT = 1 is invalid.

If the slave address does not match, the SCL line is not held low after the 9th clock cycle of SCL, and the slave operation continues. Figure 27.30 shows an operation example, and Figure 27.32 shows the detailed timing.

If the transition from Software Standby mode or Snooze mode is triggered by an interrupt other than a wakeup interrupt, for example the IRQn, the WUF flag is not set to 1. Figure 27.31 shows an operation example.

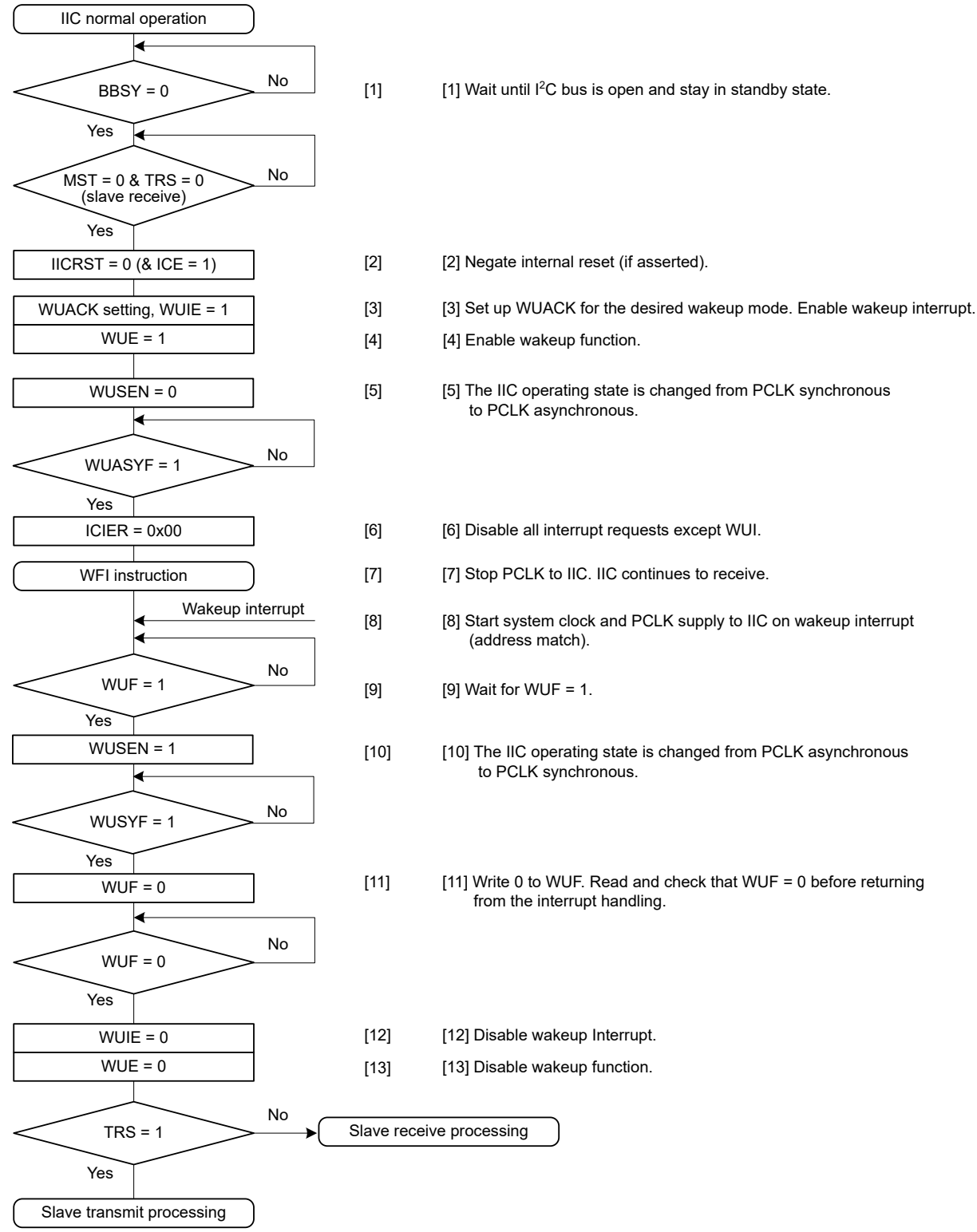

Figure 27.30 Example operation of normal wakeup mode 1 when wakeup is triggered by a wakeup interrupt on match of the slave address

Note: See Precautions on the use of the wakeup function.

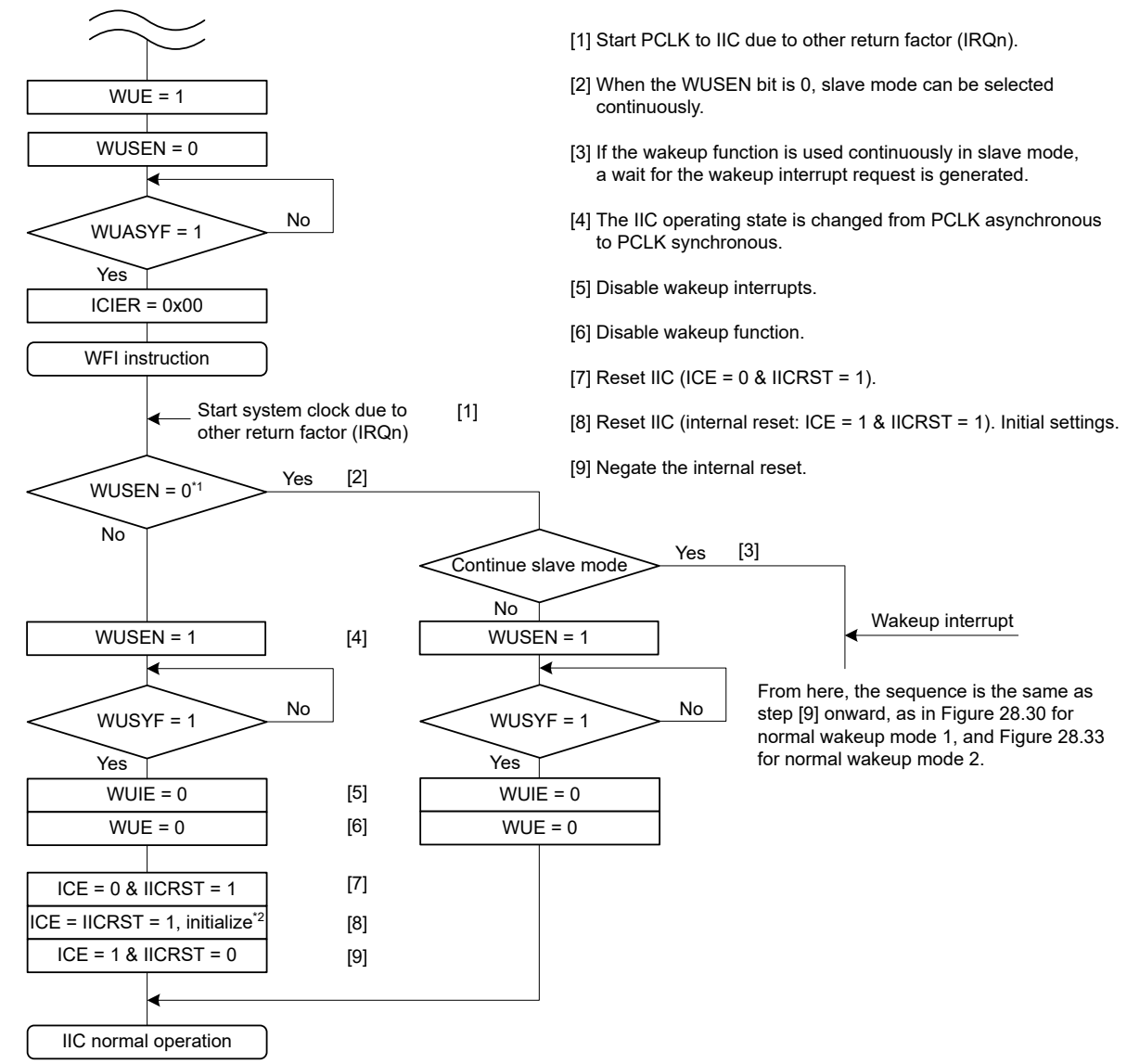

Note: PCLK = PCLKB
Note 1. In the MCU, WUSEN bit is always 0 in the IIC.
Note 2. For details on the IIC initial settings, see section 27.3.2. Initial Settings.

Figure 27.31 Example operation of normal wakeup modes 1 and 2 when wakeup is triggered by an interrupt other than IIC wakeup interrupt, for example, the IRQn

Note: For details on the IIC initial settings, see section 27.3.2. Initial Settings.

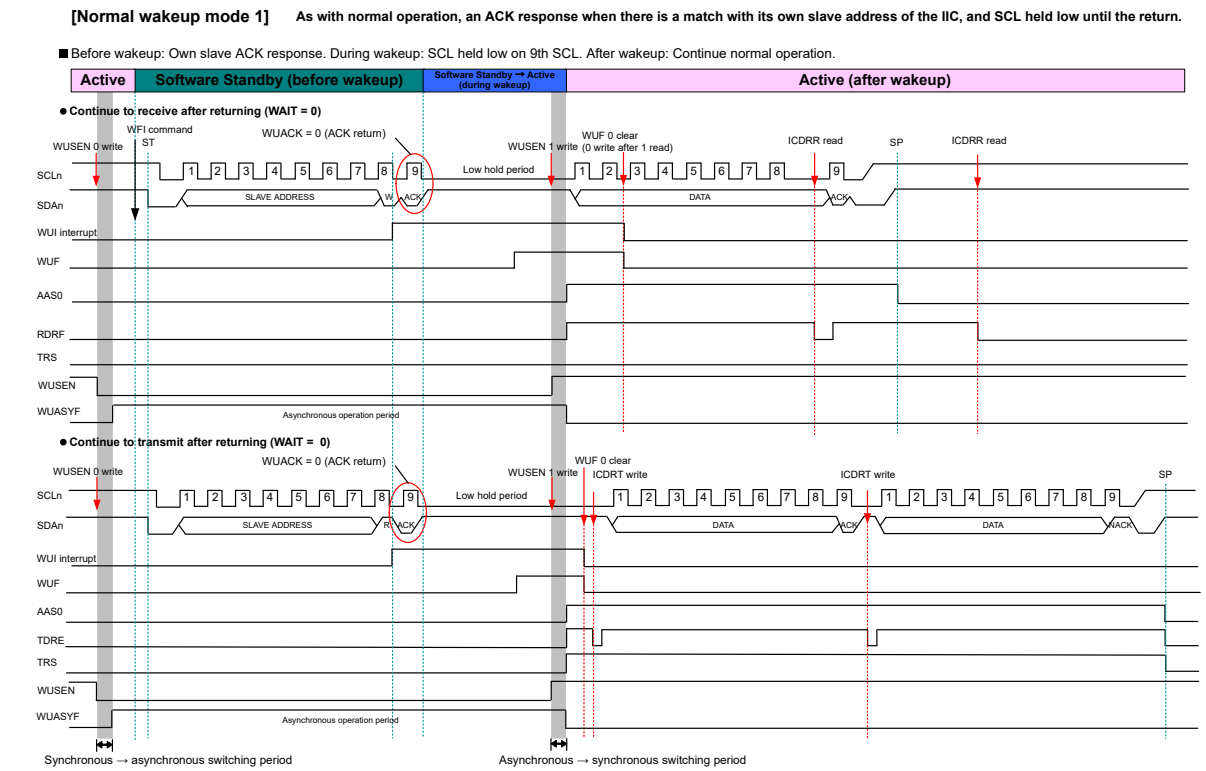

Note: n = 0

Figure 27.32 Timing of normal wakeup mode 1

27.8.2 Normal Wakeup Mode 2

This section describes the behavior, the timing, and an example operation of normal wakeup mode 2.

In normal wakeup mode 2, a wakeup interrupt triggered by a match of the slave address initiates the transition to normal operation as follows:

Before wakeup:	No response to data received with its own slave address until the end of the 8th SCL cycle.
During wakeup:	SCL line held low during the 8th and 9th clock cycles.
After wakeup:	ACK returns on the 9th clock cycle of SCL, and normal operation continues.

If the slave address does not match, the SCL line is not held low after the 8th SCL clock cycle, and the slave operation continues. Figure 27.33 shows an example operation, and Figure 27.34 shows the detailed timing.

If the transition from Software Standby mode or Snooze mode is triggered by an interrupt other than a wakeup interrupt, such as the IRQn, for example, the WUF flag is not set to 1. Figure 27.31 shows an operation example.

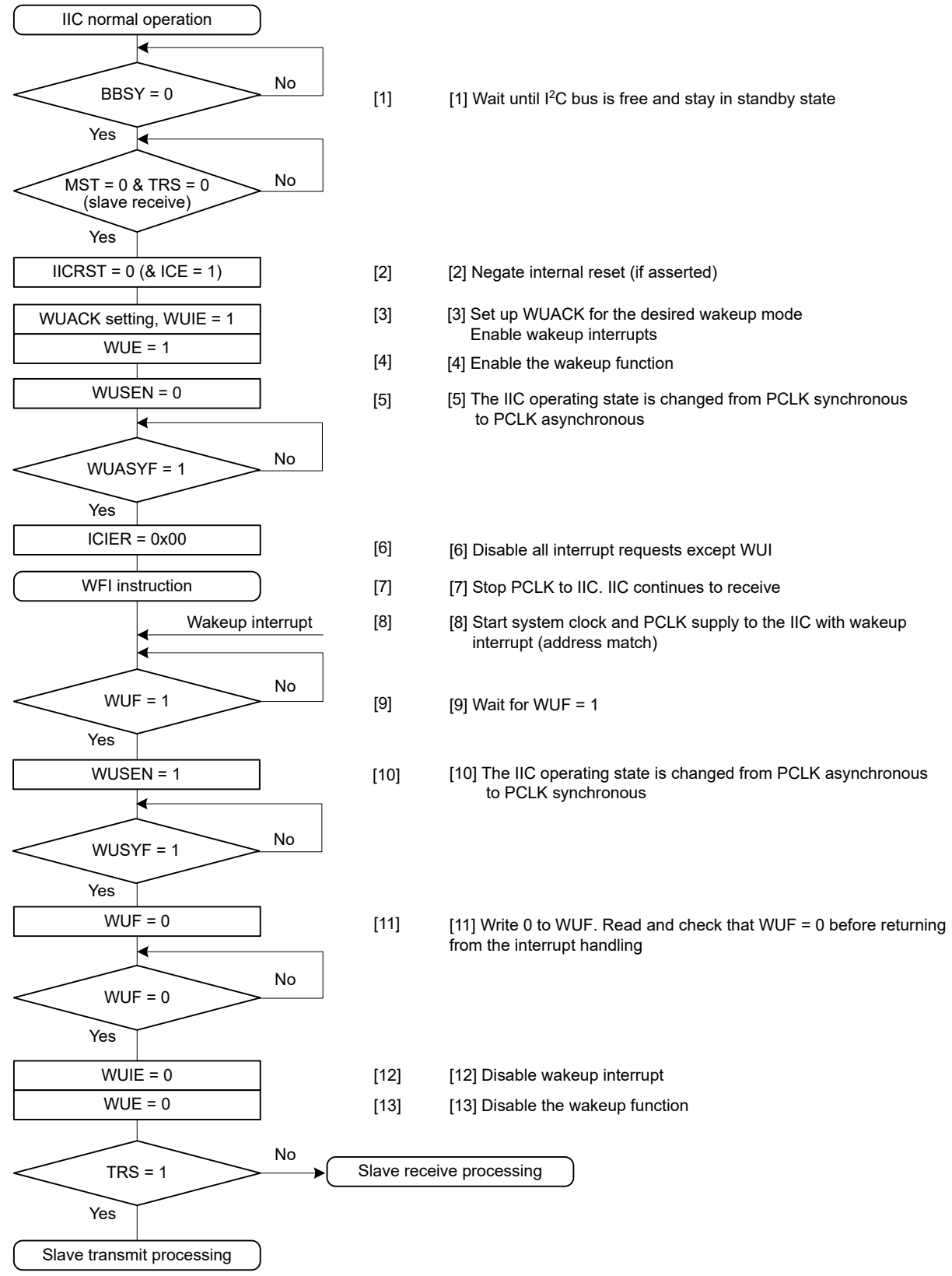

Figure 27.33 Example operation of normal wakeup mode 2 when wakeup is triggered by a wakeup interrupt on match of the slave address

Note: See Precautions on the use of the wakeup function.

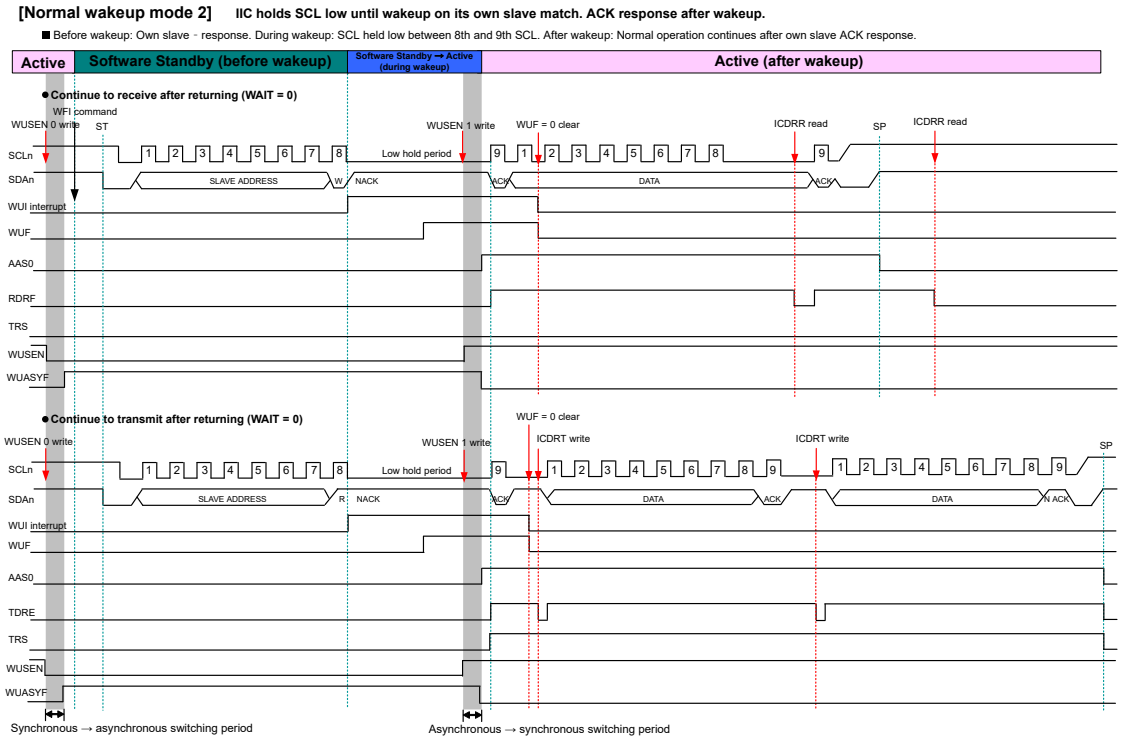

Note: n = 0

Figure 27.34 Timing of normal wakeup mode 2

27.8.3 Command Recovery Mode and EEP Response Mode (Special Wakeup Modes)

This section describes the behavior, the timing, and example operations of the command recovery and EEP response modes.

In the command recovery and EEP response modes, the SCL line is not held low during the wakeup period (after the rise of the 9th clock cycle of SCL). Therefore, other IIC devices can use the I^2C bus during this period.

A wakeup interrupt triggered by a match of the slave address initiates the transition to normal operation as follows:

Before wakeup:	In response to the data received with its own slave address, the IIC returns ACK (command recovery mode) or NACK (EEP response mode).
During wakeup:	The SCL line is not held low.
After wakeup:	Normal operation continues after IIC initialization.

If the slave address does not match, the slave operation continues.

Note: Because the SCL line is not held low during wakeup, transmission or reception of the data that follows the slave address is not possible.

Note: The command recovery and EEP response modes are internal reset states (ICE = IICRST = 1). Therefore, the match of the slave address does not set the flags, HOA, GCA, ASS0, ASS1, and ASS2 in the ICSR1 register.

Figure 27.35 shows an example operation in recovery and EEP response modes. Figure 27.37 shows the detailed timing.

If the transition from Software Standby mode or Snooze mode is triggered by an interrupt other than a wakeup interrupt, such as IRQn for example, the WUF flag is not set to 1. Follow the processing shown in Figure 27.36.

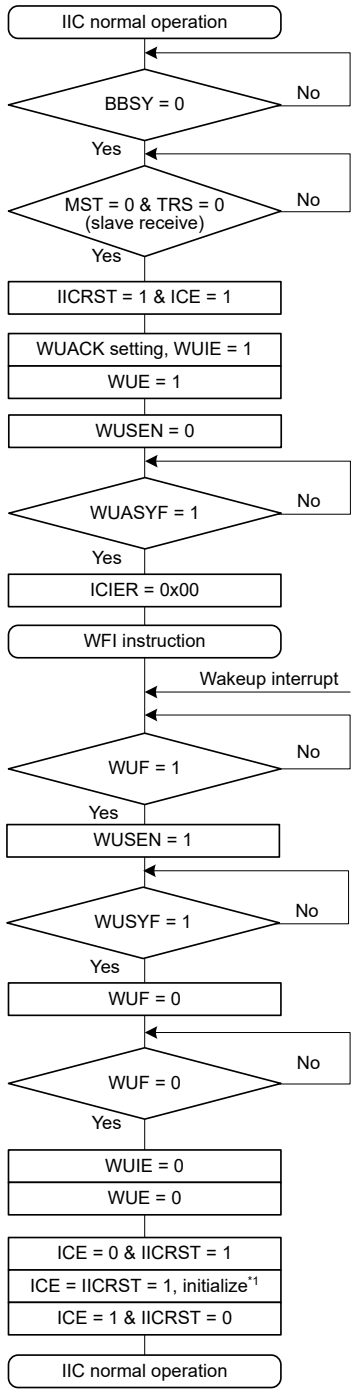

[1] [1] Wait until I²C bus is open and stay in standby state.

[2] [2] Internal reset is asserted.

[3] [3] Set up WUACK for the desired wakeup mode. Enable wakeup interrupt.

[4] [4] Enable wakeup function.

[5] [5] The IIC operating state is changed from PCLK synchronous to PCLK asynchronous.

[6] [6] Disable all interrupt requests except WUI.

[7] [7] Stop PCLK to IIC. IIC continues to receive.

[8] [8] Start system clock and PCLK supply to the IIC with wakeup interrupt (address match).

[9] [9] Wait for WUF = 1.

[10] [10] The IIC operating state is changed from PCLK asynchronous to PCLK synchronous.

[11] [11] Write 0 to WUF. Read and check that WUF = 0 before returning from the interrupt handling.

[12] [12] Disable wakeup interrupt.

[13] [13] Disable wakeup function.

[14] [14] Reset IIC (ICE = 0 & IICRST = 1).

[15] [15] Reset IIC (internal reset: ICE = 1 & IICRST = 1). Initial settings.

[16] [16] Negate the internal reset.

Note: PCLK = PCLKB

Note 1. For details on IIC initialization, see section 27.3.2. Initial Settings.

Figure 27.35 Example operation of command recovery mode and EEP response mode when wakeup is triggered by a wakeup interrupt on match of the slave address

Note: See Precautions on the use of the wakeup function.

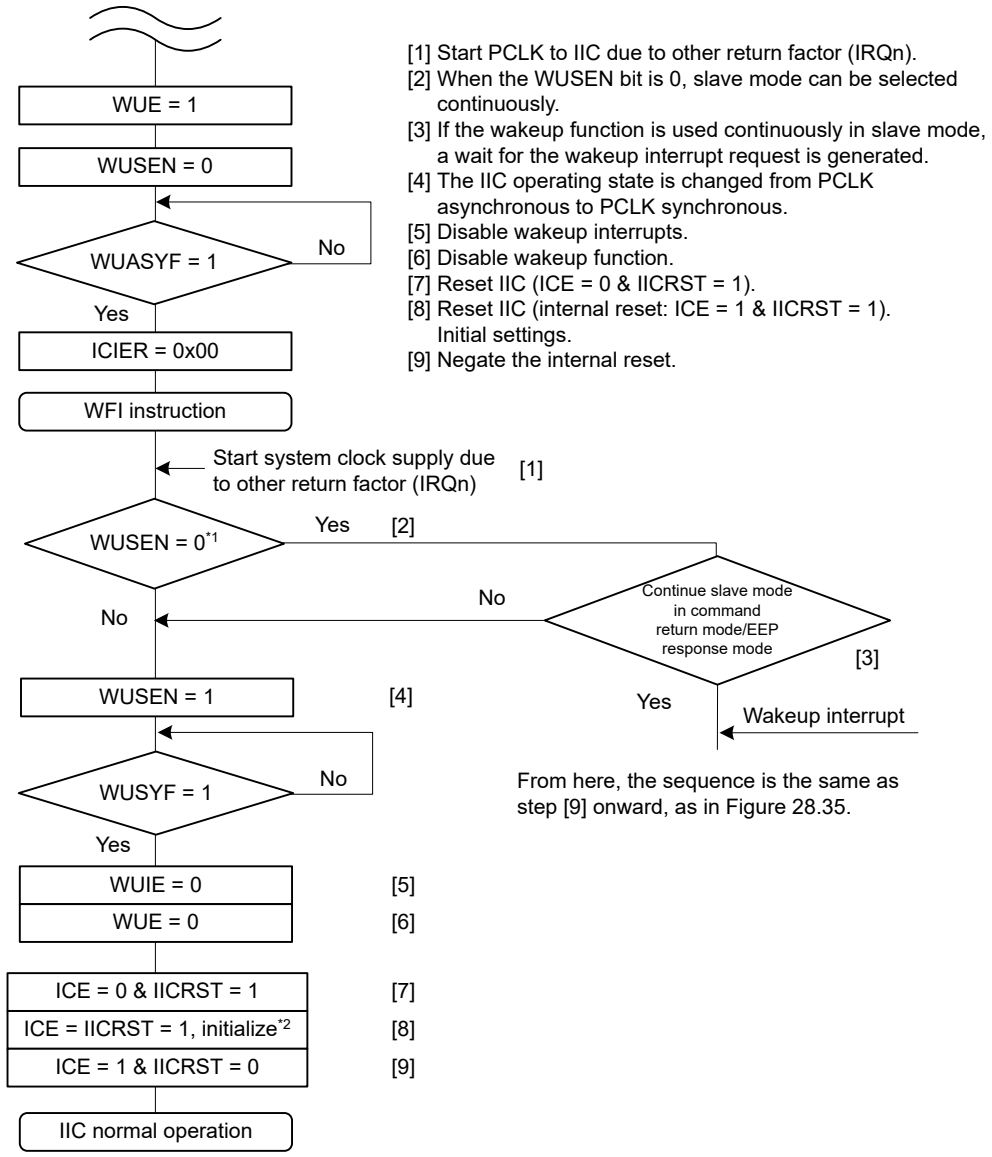

[1] Start PCLK to IIC due to other return factor (IRQn).
[2] When the WUSEN bit is 0, slave mode can be selected continuously.
[3] If the wakeup function is used continuously in slave mode, a wait for the wakeup interrupt request is generated.
[4] The IIC operating state is changed from PCLK asynchronous to PCLK synchronous.
[5] Disable wakeup interrupts.
[6] Disable wakeup function.
[7] Reset IIC (ICE = 0 & IICRST = 1).
[8] Reset IIC (internal reset: ICE = 1 & IICRST = 1). Initial settings.
[9] Negate the internal reset.

Note: PCLK = PCLKB
Note 1. In the MCU, WUSEN bit is always 0 in the IIC.
Note 2. For details on IIC initialization, see section 27.3.2. Initial Settings.

Figure 27.36 Example operation of command recovery and EEP response modes when wakeup is triggered by an interrupt other than IIC wakeup interrupt, for example, the IRQn

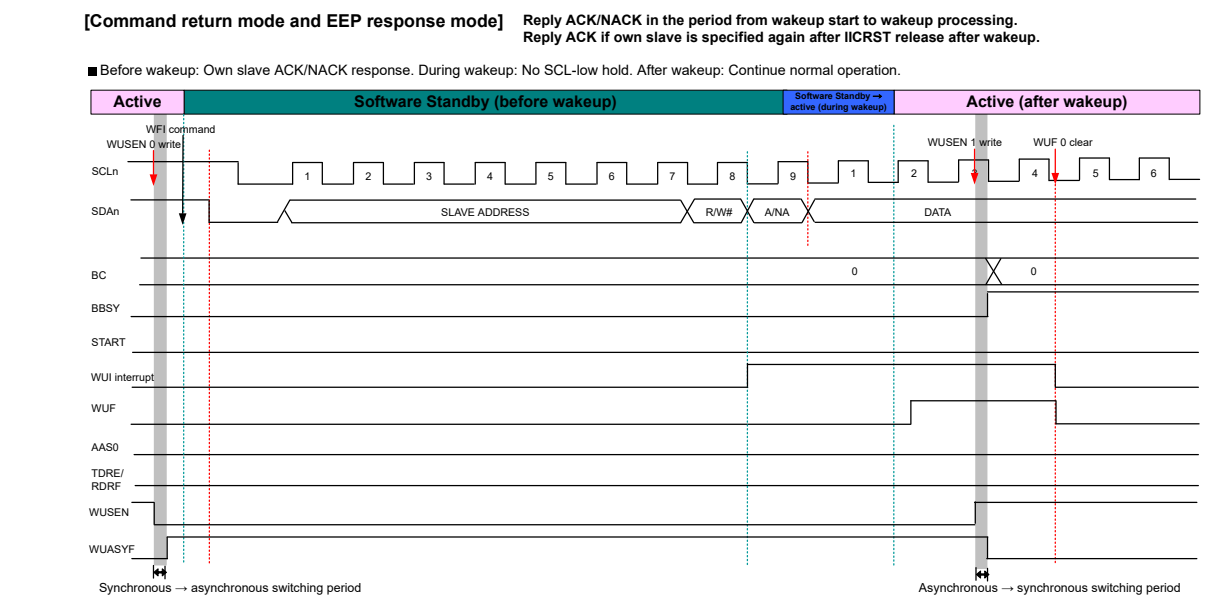

Note: n = 0

Figure 27.37 Timing of command recovery and EEP response modes

27.9 Automatic Low-Hold Function for SCL

27.9.1 Function to Prevent Wrong Transmission of Transmit Data

If the I^{2}C Bus Shift Register (ICDRS) is empty and data has not been written to the I^{2}C Bus Transmit Data Register (ICDRT) with the IIC in transmission mode (TRS bit = 1 in ICCR2), the SCLn line is automatically held low over the subsequent intervals. This low-hold period is extended until the transmit data is written, which prevents the unintended transmission of erroneous data.

Master transmit mode:

- Low-level interval after a start or restart condition is issued
- Low-level interval between the 9th clock cycle of one transfer and the 1st clock cycle of the next.

Slave transmit mode:

- Low-level interval between the 9th clock cycle of one transfer and the 1st clock cycle of the next.

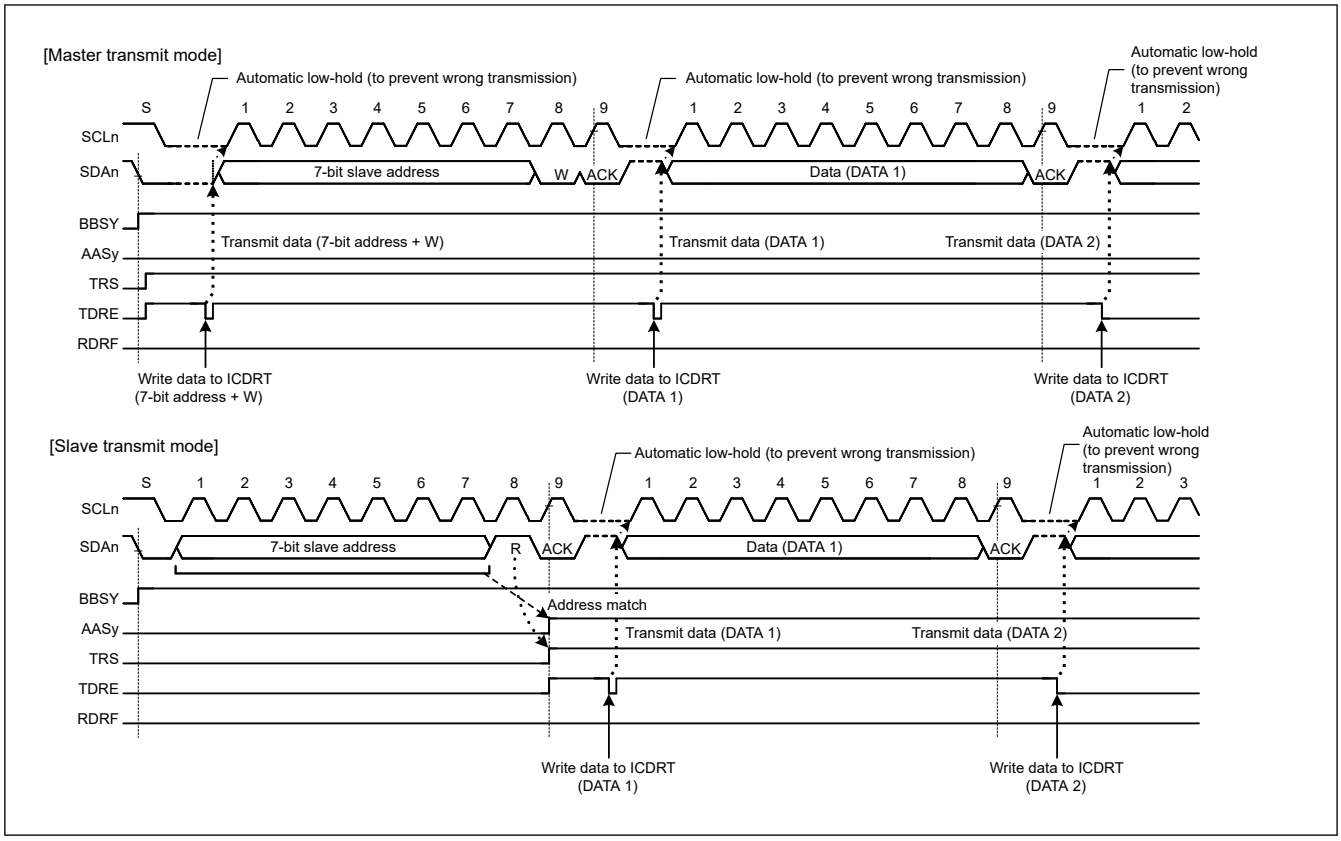

Figure 27.38 Automatic low-hold operation in transmit mode

27.9.2 NACK Reception Transfer Suspension Function

This function suspends transfer operation when NACK is received in transmit mode (TRS bit = 1 in ICCR2). This function is enabled when the NACKE bit in ICFER is set to 1. If the next transmit data is already written (TDRE flag = 0 in ICSR2) when NACK is received, the next data transmission on the falling edge of the 9th SCL clock cycle is automatically suspended. This prevents the SDAn line output level from being held low when the MSB of the next transmit data is 0.

If the transfer operation is suspended by this function (NACKF flag = 1 in ICSR2), transmit and receive operations are discontinued. To restore transmit or receive operation, after issuing the restart condition, you need to set the NACKF flag to 0 and try again, or set the NACKF flag to 0 after issuing the stop condition and then start again from issuing the start condition.

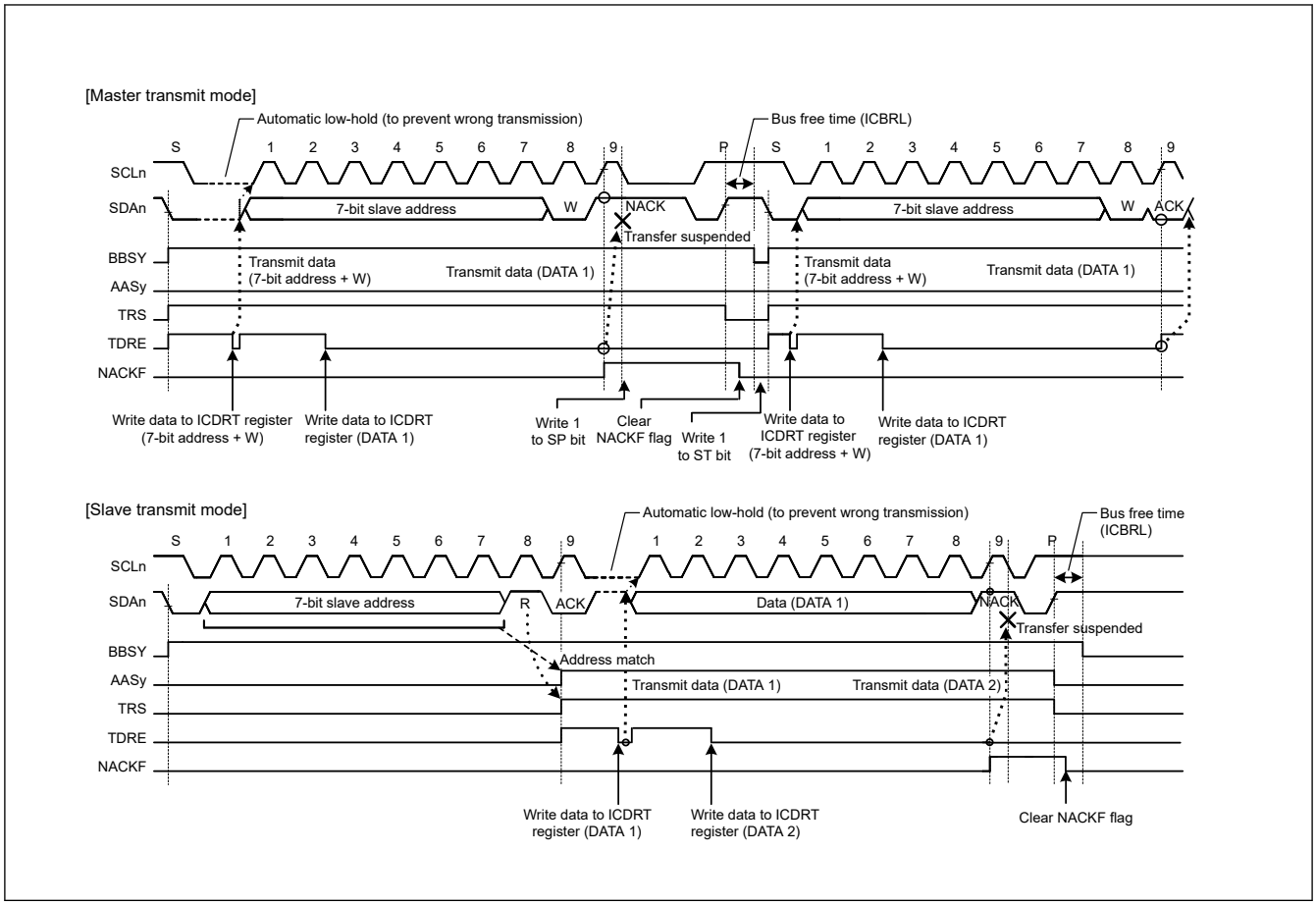

Figure 27.39 Suspension of data transfer when NACK is received, when NACKE = 1

27.9.3 Function to Prevent Failure to Receive Data

If response processing is delayed when receive data (ICDRR) read is delayed for a period of one transfer frame or more with receive data full (RDRF flag = 1 in ICSR2) in receive mode (TRS = 0 in ICCR2), the IIC holds the SCLn line low automatically immediately before the next data is received to prevent a failure to receive data.

This function is enabled even if the read processing of the final receive data is delayed and, in the meantime, the IIC slave address is designated after a stop condition is issued. This function does not interfere with other communication because the IIC does not hold the SCLn line low when a mismatch with its own slave address occurs after a stop condition is issued.

Periods in which the SCLn line is held low can be selected with a combination of the WAIT and RDRFS bits in ICMR3.

(1) 1-byte receive operation and automatic low-hold function using the WAIT bit

When the WAIT bit in ICMR3 is set to 1, the IIC performs a 1-byte receive operation using the WAIT bit function. Additionally, when the ICMR3.RDRFS bit is 0, the IIC automatically sends the ACKBT bit value in ICMR3 for the acknowledge bit in the period from the falling edge of the 8th SCL clock cycle to the falling edge of the 9th SCL clock cycle, and automatically holds the SCLn line low on the falling edge of the 9th SCL clock cycle using the WAIT bit function. This low-hold is released by reading data from ICDRR, which enables byte-wise receive operation.

The WAIT bit function is enabled for receive frames after a match with the IIC slave address, including the general call address and host address, is obtained in master or slave receive mode.

(2) 1-byte receive operation (ACK/NACK transmission control) and automatic low-hold function using the RDRFS bit

When the RDRFS bit in ICMR3 is set to 1, the IIC performs a 1-byte receive operation using the RDRFS bit function. When the RDRFS bit is set to 1, the RDRF flag in ICSR2 is set to 1 (receive data full) on the rising edge of the eighth SCL clock cycle, and the SCLn line is automatically held low on the falling edge of the eighth SCL clock cycle. This low-hold is released by writing a value to the ACKBT bit in ICMR3, but cannot be released by reading data from ICDRR, which enables receive operation through the ACK or NACK transmission control based on the data received in byte units.

The RDRFS bit function is enabled for receive frames after a match with the IIC slave address, including the general call address and host address, is obtained in master or slave receive mode.

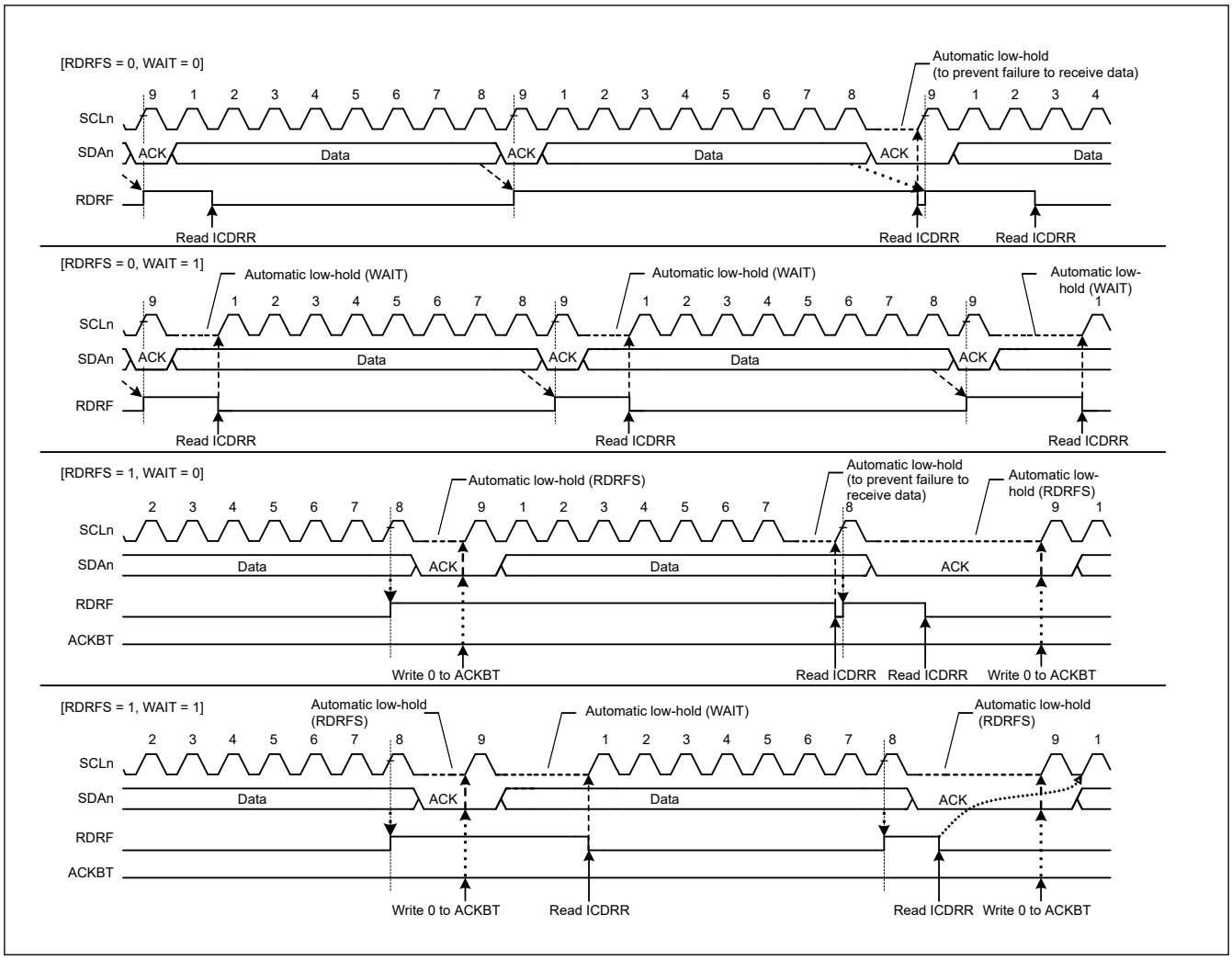

Figure 27.40 Automatic low-hold operation in receive mode using the RDRFS and WAIT bits

27.10 Arbitration-Lost Detection Functions

In addition to the normal arbitration-lost detection function defined by the I^2C bus standard, the IIC provides functions to prevent double-issue of a start condition, detect arbitration-lost during transmission of NACK, and detect arbitration-lost in slave transmit mode.

27.10.1 Master Arbitration-Lost Detection (MALE Bit)

The IIC drives the SDAn line low to issue a start condition. However, if the SDAn line was already driven low by another master device issuing a start condition, the IIC regards its own start condition as an error and considers this a loss in arbitration. Priority is given to transfer by the other master device. Similarly, if a request to issue a start condition is made by setting the ST bit in ICCR2 to 1 while the bus is busy (BBSY flag = 1 in ICCR2), the IIC regards this as a double-issuing-of-start-condition error and considers itself to have lost in arbitration. This prevents a failure of transfer resulting from a start condition being issued while transfer is in progress.

When a start condition is issued successfully, if the transmit data including the address bits (internal SDA output level) and the level on the SDAn line do not match (high output as the internal SDA output, meaning the SDAn pin is in the high-impedance state and a low level is detected on the SDAn line), the IIC loses in arbitration.

After a loss in arbitration of mastership, the IIC immediately enters slave receive mode. If a slave address, including the general call address, matches its own address at this time, the IIC continues in slave operation.

A loss in arbitration of mastership is detected when the following conditions are met while the MALE bit in ICFER is 1 (master arbitration-lost detection enabled).

[Master arbitration-lost conditions]

- Mismatching of the internal level for output on SDA and the level on the SDAn line after a start condition was issued by setting the ST bit in ICCR2 to 1 while the BBSY flag in ICCR2 is set to 0 (erroneous issuing of a start condition)
- Setting of the ST bit in ICCR2 to 1 (start condition double-issue error) while the BBSY flag is 1
- When the transmit data excluding acknowledge (internal SDA output level) does not match the level on the SDAn line in master transmit mode (MST and TRS bits = 11b in ICCR2).

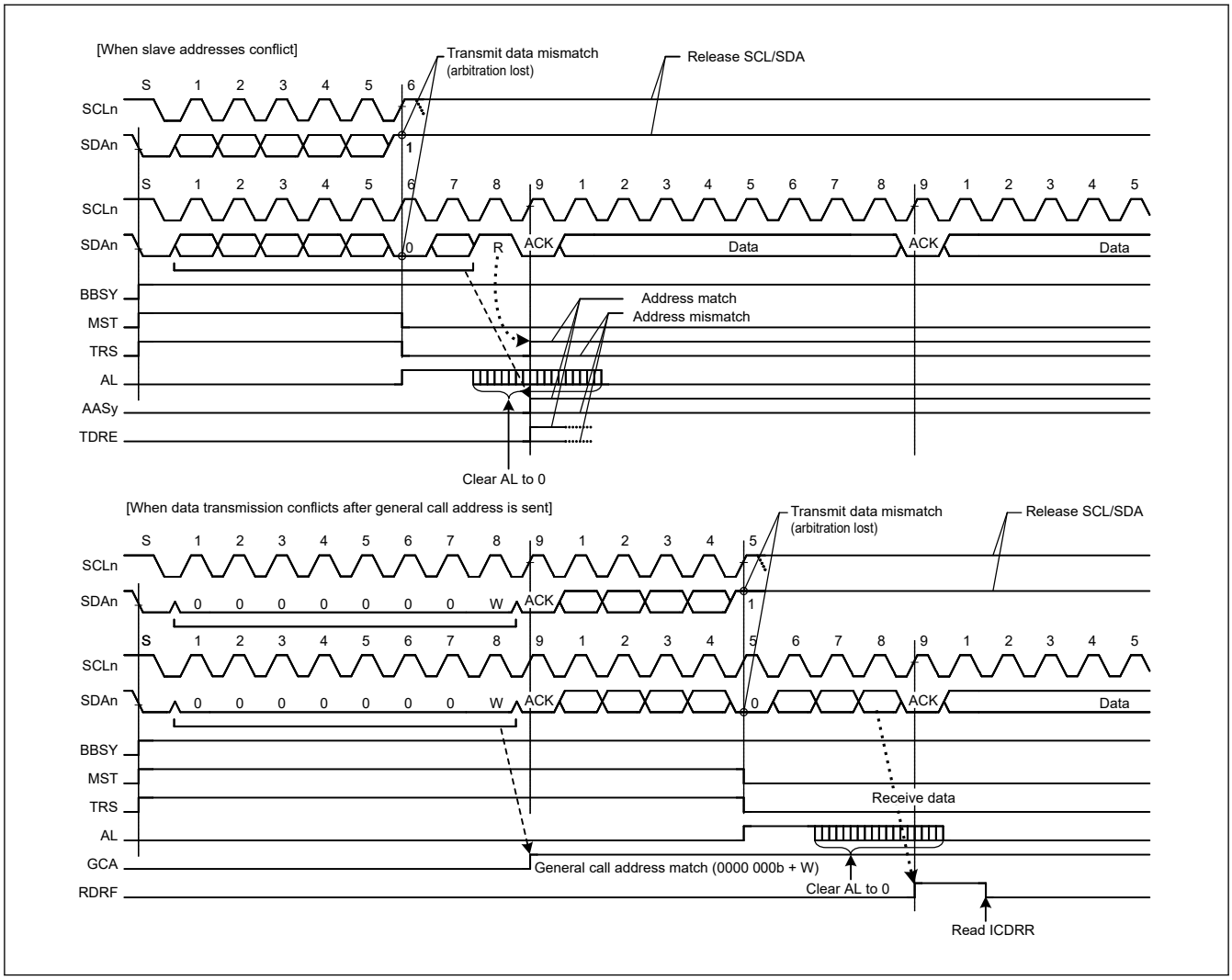

Figure 27.41 Examples of master arbitration-lost detection when MALE = 1

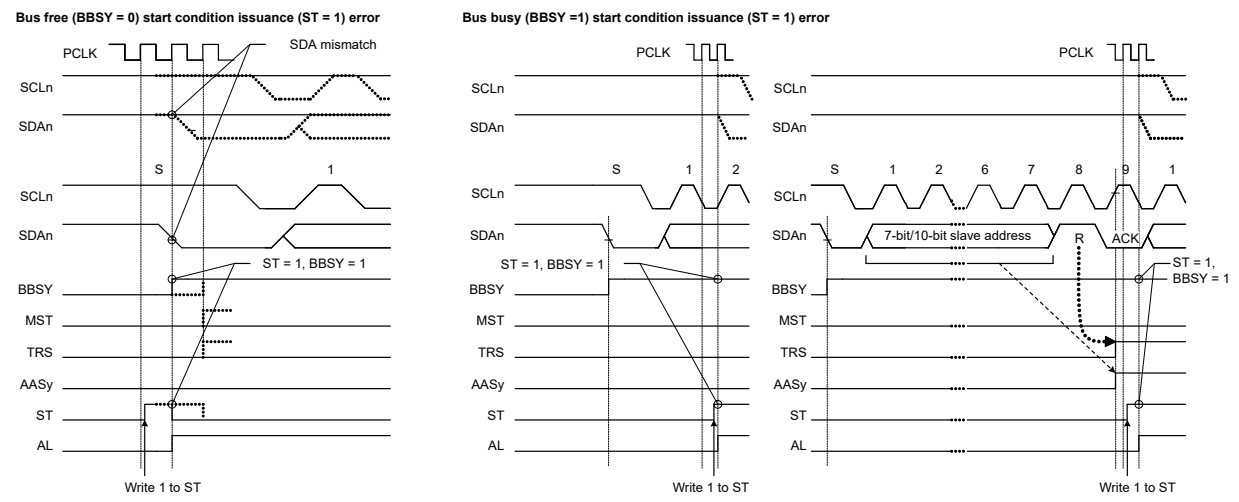

Note: PCLK = PCLKB

Figure 27.42 Arbitration-lost when start condition is issued when MALE = 1

27.10.2 Function to Detect Loss of Arbitration During NACK Transmission (NALE Bit)

This function causes arbitration to be lost if the internal SDA output level does not match the level on the SDAn line (high output as the internal SDA output, meaning the SDAn pin is in the high-impedance state and the low level is detected on the SDAn line) during transmission of NACK in receive mode. Arbitration is lost because of a conflict between NACK and ACK transmissions when two or more master devices receive data from the same slave device simultaneously in a multi-master system. Such a conflict occurs when multiple master devices send or receive the same information through a single slave device. Figure 27.43 shows an example of arbitration-lost detection during transmission of NACK.

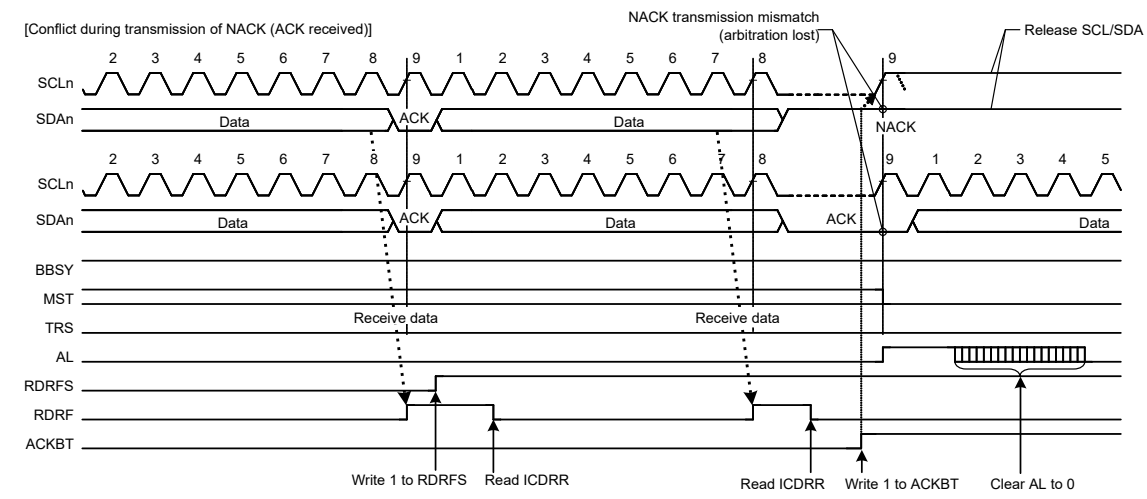

Figure 27.43 Example of arbitration-lost detection during transmission of NACK when NALE = 1

The following explains arbitration-lost detection using an example in which two master devices (master A and master B) and a single slave device are connected through the bus. In this example, master A receives 2 bytes of data from the slave device, and master B receives 4 bytes of data from the slave device.

If master A and master B access the slave device simultaneously, because the slave address is identical, arbitration is not lost in either master A or master B during access to the slave device. Therefore, both master A and master B recognize that they have obtained the bus mastership and operate as such. Master A sends NACK when it has received 2 final bytes of data from the slave device. Meanwhile, master B sends ACK because it has not received the required 4 bytes of data. At this time, the NACK transmission from master A and the ACK transmission from master B conflict. In general, if a conflict like

this occurs, master A cannot detect the ACK transmitted by master B and issues a stop condition. The stop condition issue conflicts with the SCL clock output of master B, which disrupts communication.

When the IIC receives ACK during transmission of NACK, it detects a defeat in conflict with other master devices and causes arbitration to be lost. If arbitration is lost during transmission of NACK, the IIC immediately cancels the slave match condition and enters slave receive mode. This prevents a stop condition from being issued, preventing a communication failure on the bus.

Similarly, in the ARP command processing of SMBus, the function to detect loss of arbitration during transmission of NACK is also available for eliminating the extra clock cycle processing, such as 0xFF transmission processing, which is required if the UDID (Unique Device Identifier) of the assigned address does not match in the Get UDID general processing after the Assign Address command.

The IIC detects arbitration-lost during transmission of NACK when the following condition is met with the NALE bit in ICFER set to 1 (arbitration-lost detection during NACK transmission enabled).

[Condition for arbitration-lost during NACK transmission]

- When the internal SDA output level does not match the SDAn line (ACK is received) during transmission of NACK (ACKBT bit = 1 in ICMR3).

27.10.3 Slave Arbitration-Lost Detection (SALE Bit)

This function causes arbitration to be lost if the transmit data (internal SDA output level) and the level on the SDAn line do not match (high output as the internal SDA output, meaning the SDAn pin is in the high-impedance state and a low level is detected on the SDAn line) in slave transmit mode. This arbitration-lost detection function is mainly used when transmitting a UDID (Unique Device Identifier) over an SMBus.

When the IIC loses slave arbitration, the IIC is immediately released from the slave-matched state and enters slave receive mode. This function can detect conflicts of data during transmission of UDIDs over an SMBus and eliminates subsequent redundant processing for the transmission of 0xFF.

The IIC detects slave arbitration-lost when the following condition is met with the SALE bit in ICFER set to 1 (slave arbitration-lost detection enabled).

[Condition for slave arbitration-lost]

- When transmit data excluding acknowledge (internal SDA output level) does not match the SDAn line in slave transmit mode (MST and TRS bits = 01b in ICCR2).

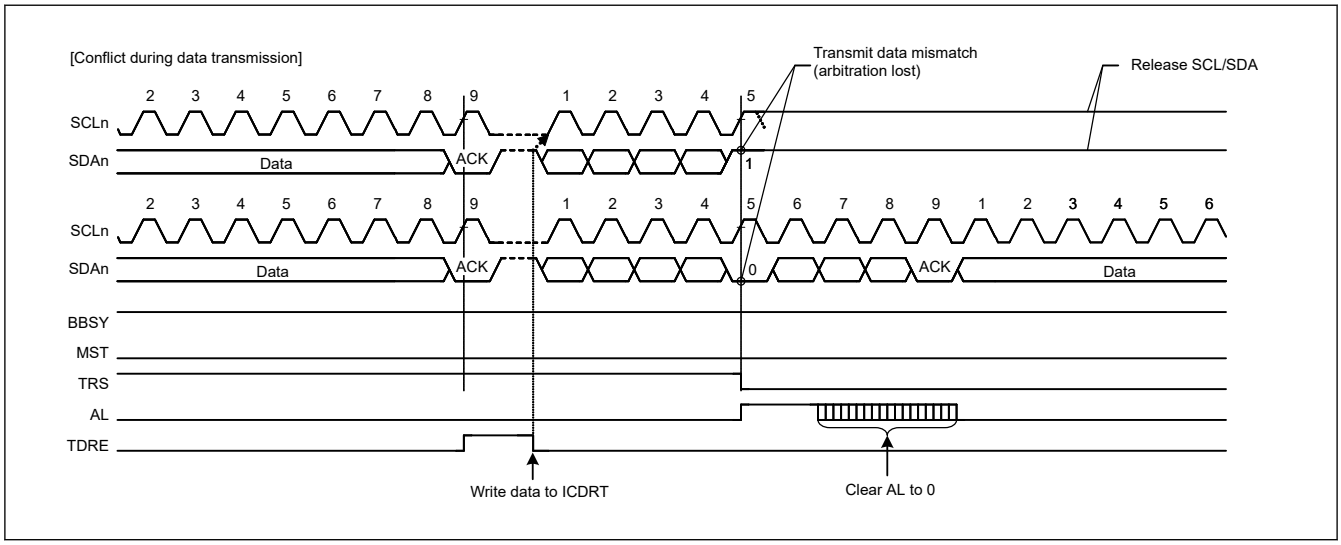

Figure 27.44 Example of slave arbitration-lost detection when SALE = 1

27.11 Start, Restart, and Stop Condition Issuing Function

27.11.1 Issuing a Start Condition

The IIC issues a start condition when the ST bit in ICCR2 is set to 1. When the ST bit is set to 1, a start condition request is made, and the IIC issues a start condition when the BBSY flag in ICCR2 is 0 (bus free state). When a start condition is issued normally, the IIC automatically shifts to the master transmit mode.

To issue a start condition:

1. Drive the SDAn line low (high level to low level).
2. Ensure that the time set in ICBRH and the start condition hold time elapse.
3. Drive the SCLn line low (high level to low level).
4. Detect low level on the SCLn line and ensure the low-level period of the SCLn line set in ICBRL elapses.

27.11.2 Issuing a Restart Condition

The IIC issues a restart condition when the RS bit in ICCR2 is set to 1. When the RS bit is set to 1, a restart condition request is made, and the IIC issues a restart condition when the BBSY flag in ICCR2 is 1 (bus busy state) and the MST bit in ICCR2 is 1 (master mode).

To issue a restart condition:

1. Release the SDAn line.
2. Ensure the low-level period of the SCLn line set in ICBRL elapses.
3. Release the SCLn line (low level to high level).
4. Detect a high level on the SCLn line and ensure the time set in ICBRL and the restart condition setup time elapse.
5. Drive the SDAn line low (high level to low level).
6. Ensure the time set in ICBRH and the restart condition hold time elapse.
7. Drive the SCLn line low (high level to low level).
8. Detect a low level on the SCLn line and ensure the low-level period of the SCLn line set in ICBRL elapses.

Note: When issuing restart condition requests, write the slave address to ICDRT after confirming that ICCR2.RS = 0. Data written while ICCR2.RS = 1 is not forwarded because of the retransmission condition before the occurrence.

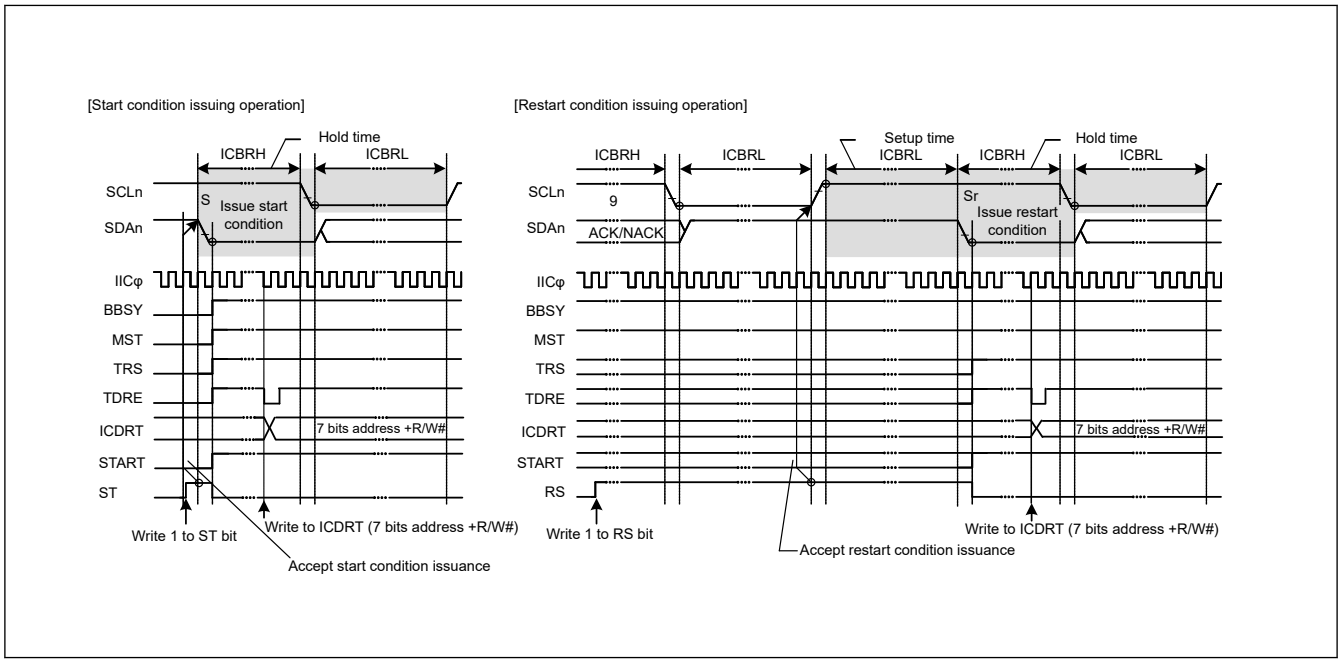

Figure 27.45 Start and restart condition issue timing using the ST and RS bits

Figure 27.46 shows the operation timing when a restart condition is issued after the master transmission.

[To issue a restart condition after the master transmission:]

1. Initialize the IIC using the procedure in section 27.3.2. Initial Settings.
2. Read the BBSY flag in ICCR2 to check that the bus is open, then set the ST bit in ICCR2 to 1 (start condition issuance request). On receiving the request, the IIC issues a start condition. At the same time, the BBSY and the START flags in ICSR2 are automatically set to 1 and the ST bit is automatically set to 0. If the start condition is detected and the internal levels for the SDA output state and the levels on the SDAn line match while the ST bit is 1, the IIC recognizes that a start condition is successfully issued as requested by the ST bit has been successfully completed. The MST and TRS bits in ICCR2 are automatically set to 1, placing the IIC in master transmit mode. The TDRE flag in ICSR2 is also automatically set to 1 when the TRS bit is set to 1.
3. Check that the TDRE flag in ICSR2 is 1, and then write the value for transmission (the slave address and the R/W# bit) to ICDRT. After the data for transmission is written to ICDRT, the TDRE flag is automatically set to 0, data is transferred from ICDRT to ICDRS, and the TDRE flag is again set to 1. After the byte containing the slave address and R/W# bit has been transmitted, the value of the TRS bit is automatically updated to select master transmit or master receive mode according to the value of the transmitted R/W# bit. If the value of the R/W# bit is 0, the IIC continues in master transmit mode. If the ICSR2.NACKF flag is 1 at this time, indicating that no slave device recognized the address or that there was an error in communications, write 1 to ICCR2.SP bit to issue a stop condition. To transmit data with an address in the 10-bit format, start by writing 1111 0b, the 2 upper bits of the slave address, and W to ICDRT as the first address transmission. Then, as the second address transmission, write the 8 lower bits of the slave address to ICDRT.
4. After confirming that the TDRE flag in ICSR2 is 1, write data for transmission to the ICDRT register. The IIC automatically holds the SCLn line low until data for transmission is ready, a restart condition is issued or a stop condition is issued.
5. After all bytes of data for transmission are written to the ICDRT register, wait until the value of the TEND flag in ICSR2 returns to 1. Then after checking that the START flag in ICSR2 is 1, set the START flag in ICSR2 to 0.
6. Set the RS bit in ICCR2 to 1 (restart condition issue request). On receiving the request, the IIC issues a restart condition.
7. After checking that the START flag in ICSR2 is 1, write the value for transmission (the slave address and the R/W# bit) to ICDRT.

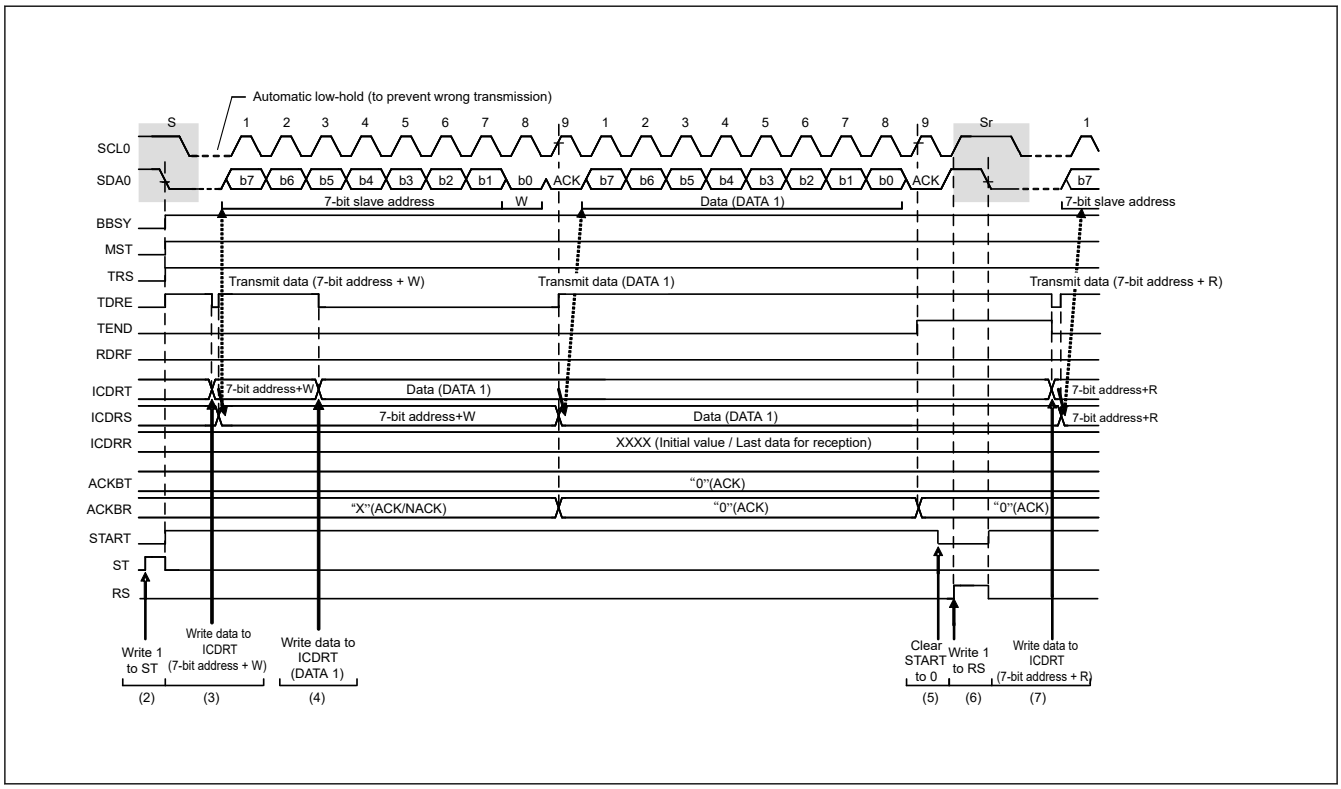

Figure 27.46 Restart condition issue timing after master transmission.

27.11.3 Issuing a Stop Condition

The IIC issues a stop condition when the SP bit in ICCR2 is set to 1. When the SP bit is set to 1, a stop condition request is made, and the IIC issues a stop condition when the BBSY flag in ICCR2 is 1 (bus busy state) and the MST bit in ICCR2 is 1 (master mode).

To issue a stop condition:

1. Drive the SDAn line low (high level to low level).
2. Ensure the low-level period of the SCLn line set in ICBRL elapses.
3. Release the SCLn line (low level to high level).
4. Detect a high level on the SCLn line and ensure the time set in ICBRH and the stop condition setup time elapse.
5. Release the SDAn line (low level to high level).
6. Ensure the time set in ICBRL and the bus free time elapse.
7. Clear the BBSY flag to 0 to release the bus mastership.

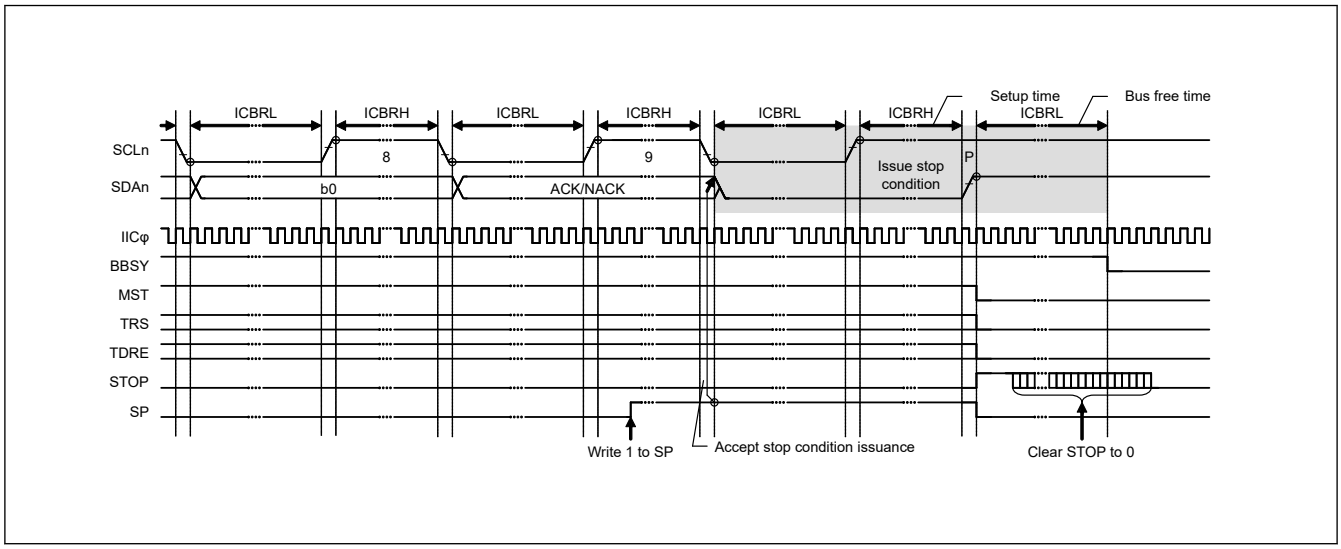

Figure 27.47 Stop condition issue timing using the SP bit

27.12 Bus Hanging

If the clock signals from the master and slave devices are out of synchronization because of noise or other factors, the I^2C bus might hang with a fixed level on the SCLn line or SDAn line.

To manage bus hanging, the IIC has a timeout function to detect hanging by monitoring the SCLn line, and a function for outputting an extra SCL clock cycle to release the bus from:

- A timeout function to detect hanging by monitoring the SCLn line
- The IIC reset function
- An internal reset function.

By checking the SCLO, SDAO, SCLI, and SDAI bits in ICCR1, it is possible to see whether the IIC or its communicating partner is placing the low level on the SCLn or SDAn line.

27.12.1 Timeout Function

The timeout function can detect when the SCLn line is stuck longer than the predetermined time. The IIC can detect an abnormal bus state by monitoring that the SCLn line is stuck low or high for a predetermined time.

The timeout function monitors the SCLn line state and counts the low- or high-level period using the internal counter. The timeout function resets the internal counter each time the SCLn line changes (rises or falls), but continues to count unless the SCLn line changes. If the internal counter overflows because no SCLn line changes, the IIC can detect the timeout and report the bus hung state.

This timeout function is enabled when the ICFER.TMOE bit is 1. It detects a hung state when the SCLn line is stuck low or high during the following conditions:

- The bus is busy (ICCR2.BBSY flag is 1) in master mode (ICCR2.MST bit is 1)
- The IIC slave address is detected (ICSR1 register is not 0x00) and the bus is busy (ICCR2.BBSY flag is 1) in slave mode (ICCR2.MST bit is 0)
- The bus is open (ICCR2.BBSY flag is 0) while a start condition is requested (ICCR2.ST bit is 1).

The internal counter of the timeout function uses the internal reference clock (IICφ) set in the CKS[2:0] bits in ICMR1 as a count source. It functions as a 16-bit counter when long mode is selected (TMOS bit = 0 in ICMR2) or a 14-bit counter when short mode is selected (TMOS bit = 1).

The SCLn line level (low, high, or both levels) during which this counter is activated can be selected in the TMOH and TMOL bits in ICMR2. If both TMOL and TMOH bits are set to 0, the internal counter is disabled.

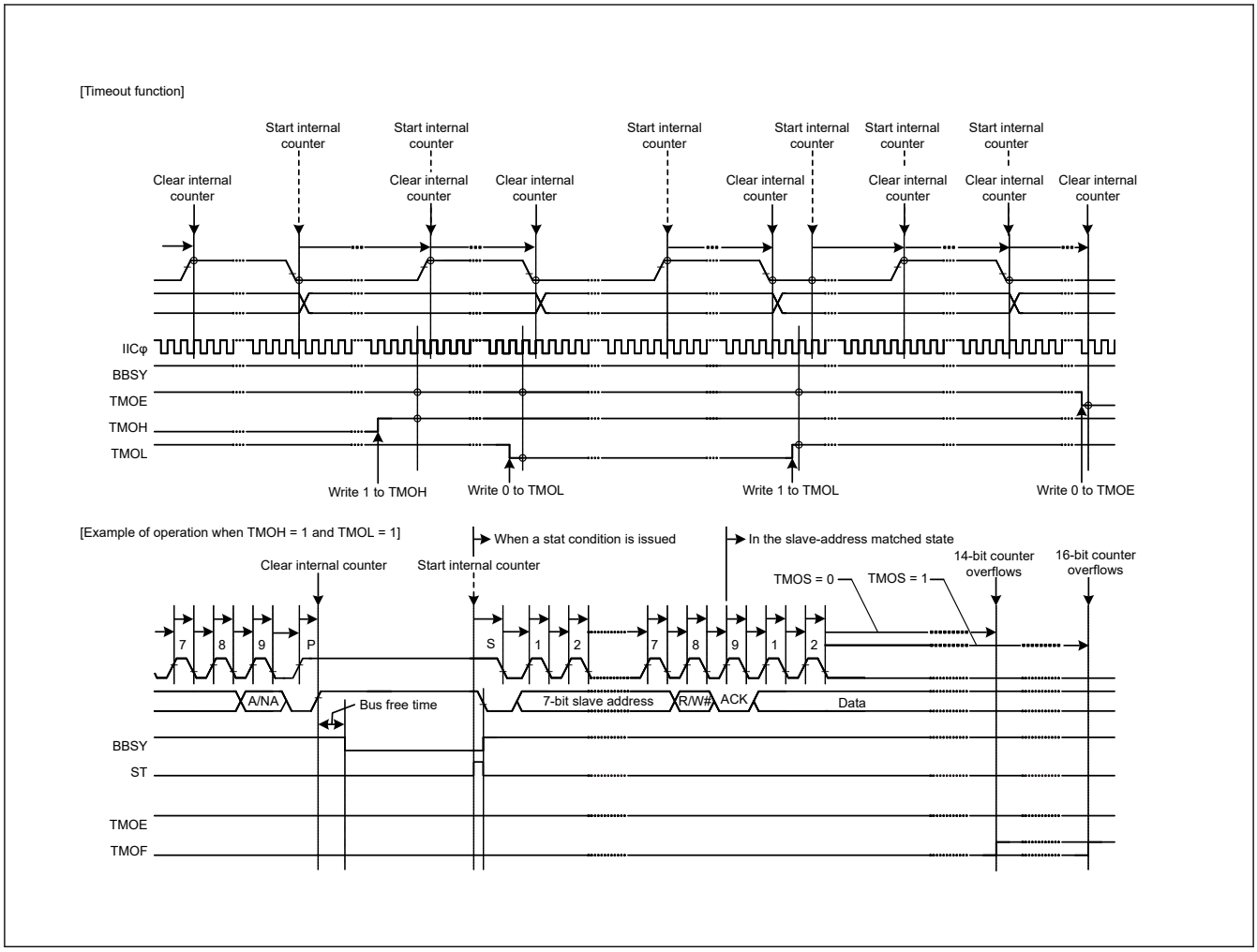

Figure 27.48 Timeout function using the TMOE, TMOS, TMOH, and TMOL bits

27.12.2 Extra SCL Clock Cycle Output Function

In master mode, this function outputs extra SCL clock cycles to release the SDAn line of the slave device from being held low because the master is out of synchronization with the slave device. This function is mainly used in master mode to release the SDAn line of the slave device from being fixed low by including extra cycles of SCL output from the IIC. It uses single cycles of the SCL clock for a bus error where the IIC cannot issue a stop condition because the slave device is holding the SDAn line at the low level. Do not use this function in normal situations. Using it when communications are proceeding correctly leads to malfunctions.

When the CLO bit in ICCR1 is set to 1 in master mode, a single cycle of the SCL clock at the frequency specified in the CKS[2:0] bits in ICMR1, and in the ICBRH and ICBRL registers, is output as an extra clock cycle. After output of this

single cycle of the SCL clock, the CLO bit is automatically set to 0. At this time, if ICCR2.BBSY = 1, the SCL pin goes low, and when ICCR2.BBSY = 0, the SCL pin goes high. After confirming that the CLO bit is 0 by software, write 1 to the CLO bit to output the additional clock continuously.

When the IIC module is in master mode and the slave device is holding the SDAn line low because synchronization with the slave device is lost because of effects like noise, the output of a stop condition is not possible. This function can be used to output extra cycles of SCL one by one to make the slave device release the SDAn line from being held low, and so recover the bus from an unusable state. Release of the SDAn line by the slave device can be monitored by reading the SDAI bit in ICCR1. After confirming the release of the SDAn line by the slave device, complete communications by reissuing the stop condition.

[Output conditions for using the CLO bit in ICCR1]

- When the bus is open (BBSY flag in ICCR2 = 0) or in master mode (MST bit = 1 and BBSY flag = 1 in ICCR2)
- When the communication device does not hold the SCLn line low.

Figure 27.49 shows the operation timing of the extra SCL clock cycle output function (CLO bit).

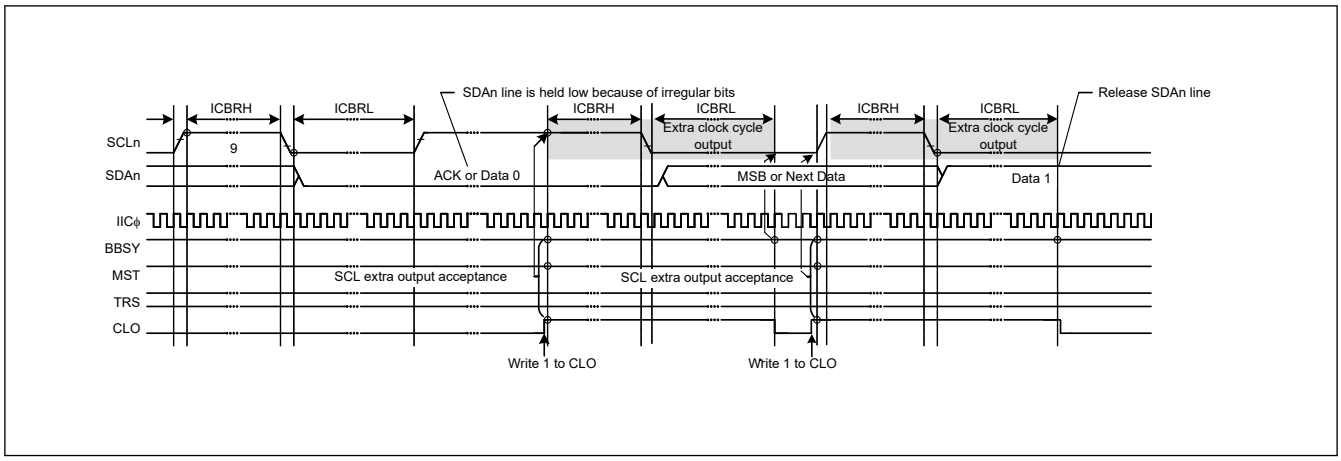

Figure 27.49 Extra SCL clock cycle output function using the CLO bit

27.12.3 IIC Reset and Internal Reset

The IIC module incorporates a function for resetting itself. It uses two types of resets:

- An IIC reset, which initializes all registers, including the BBSY flag in ICCR2.
- An internal reset, which releases the IIC from the slave-address matched state and initializes the internal counter while saving other settings.

After issuing a reset, always set the IICRST bit in ICCR1 to 0. Both types of resets are valid for release from bus-hung states, because both restore the output state of the SCLn and SDAn pins to the high-impedance state.

Issuing a reset during slave operation might lead to a loss of synchronization between the master device clock and the slave device clock, so avoid this when possible. In addition, monitoring of the bus state, such as for the presence of a start condition, is not possible during an IIC reset (ICE and IICRST bits = 01b in ICCR1).

For a detailed description of the IIC and internal resets, see section 27.15. State of Registers When Issuing Each Condition.

27.13 SMBus Operation

The IIC supports data communication conforming to the SMBus Specification (version 2.0). To perform SMBus communication, set the SMBS bit in ICMR3 to 1. To use the transfer rate within a range of 10 to 100 kbps of the SMBus standard, set the CKS[2:0] bits in ICMR1, the ICBRH, and ICBRL registers. In addition, specify the values in the DLCS bit in ICMR2 and the SDDL[2:0] bits in ICMR2 to meet the data hold time specification of 300 ns or more. When the IIC is used only as a slave device, the transfer rate setting is not required, but ICBRL must be set to a value longer than the data setup time (250 ns).

For the SMBus device default address (1100 001b), use one of the slave address registers L0 to L2 (SARL0, SARL1, and SARL2), and set the associated FS bit (7- or 10-bit address format select) in SARUy (y = 0 to 2) to 0 (7-bit address format).

When transmitting the UDID (Unique Device Identifier), set the SALE bit in ICFER to 1 to enable the slave arbitration-lost detection function.

27.13.1 SMBus Timeout Measurement

(1) Measuring slave device timeout

The following period (timeout interval: $T_{LOW: SEXT}$) must be measured for slave devices in SMBus communication:

- From start condition to stop condition.

To measure timeout for slave devices, measure the period from start condition detection to stop condition detection with the GPT using the IIC start condition detection interrupt (STIn) and stop condition detection interrupt (SPIn). The measured timeout period must be within the total clock low-level period [slave device] $T_{LOW: SEXT}$: 25 ms (maximum) of the SMBus standard.

If the time measured with the GPT exceeds the clock low-level detection timeout $T_{TIMEOUT}$: 25 ms (minimum) of the SMBus standard, the slave device must release the bus by writing 1 to the IICRST bit in ICCR1 to issue an internal reset of the IIC. When an internal reset is issued, the IIC stops driving the bus for the SCLn and SDAn pins, making them output high-impedance, which releases the bus.

(2) Measuring master device timeout

The following periods (timeout interval: $T_{LOW: MEXT}$) must be measured for master devices in SMBus communication:

- From start condition to acknowledge bit
- Between acknowledge bits
- From acknowledge bit to stop condition.

To measure timeout for master devices, measure these periods with the GPT using the IIC start condition detection interrupt (STIn), stop condition detection interrupt (SPIn), transmit end interrupt (IICn_TEI), or receive data full interrupt (IICn_RXI). The measured timeout period must be within the total clock low-level extended period (master device) $T_{LOW: MEXT}$: 10 ms (maximum) of the SMBus standard, and the total of all $T_{LOW: MEXT}$ values from start condition to stop condition must be within $T_{LOW: SEXT}$: 25 ms (maximum).

For the ACK receive timing (rising edge of the 9th SCL clock cycle), monitor the TEND flag in ICSR2 in master transmit mode (master transmitter) and the RDRF flag in ICSR2 in master receive mode (master receiver). Perform byte-wise transmit operations in master transmit mode, and hold the RDRFS bit in ICMR3 at 0 until the byte immediately before reception of the final byte in master receive mode. While the RDRFS bit is 0, the RDRF flag is set to 1 on the rising edge of the 9th SCL clock cycle.

If the period measured with the GPT exceeds the total clock low-level extended period (master device) $T_{LOW: MEXT}$: 10 ms (maximum) of the SMBus standard or the total of measured periods exceeds the clock low-level detection timeout $T_{TIMEOUT}$: 25 ms (minimum) of the SMBus standard, the master device must stop the transaction by issuing a stop condition. In master transmit mode, immediately stop the transmit operation (stop writing data to ICDRT).

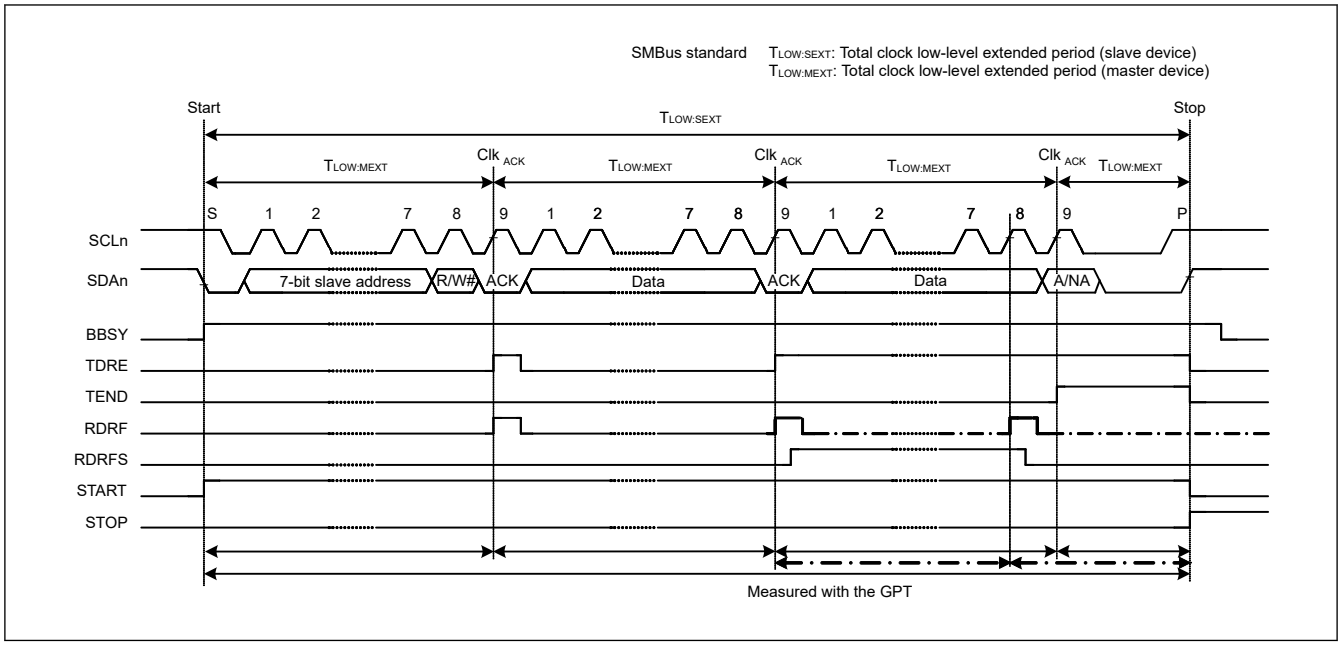

Figure 27.50 SMBus timeout measurement

27.13.2 Packet Error Code (PEC)

The MCU provides a CRC calculator that enables transmission of a Packet Error Code (PEC) or allows checking of the received data in SMBus data communication for the IIC. For the CRC-generating polynomials of the CRC calculator, see section 33, Cyclic Redundancy Check (CRC).

In master transmit mode, the PEC data can be generated by writing all transmit data to the CRC Data Input Register (CRCDIR) in the CRC calculator.

In master receive mode, the PEC data can be checked by writing all receive data to CRCDIR in the CRC calculator and comparing the obtained value in the CRC Data Output Register (CRCDOR) with the received PEC data.

To send ACK or NACK based on the match or mismatch result when the final byte is received as a result of the PEC code check, set the RDRFS bit in ICMR3 to 1 before the rising edge of the 8th SCL clock cycle during reception of the final byte, and hold the SCLn line low on the falling edge of the 8th clock cycle.

27.13.3 SMBus Host Notification Protocol (Notify ARP Master Command)

In communicating over an SMBus, a slave device can temporarily act as a master device to notify the SMBus host (or ARP master) of its own slave address, or to request its own slave address from the SMBus host.

For a product using the MCU to operate as an SMBus host or ARP master, the host address (0001 000b) sent from the slave device must be detected as a slave address, and so the IIC provides a function for detecting the host address. To detect the host address as a slave address, set the SMBS bit in ICMR3 and the HOAE bit in ICSER to 1. Operation after the host address is detected is the same as normal slave operation.

27.14 Interrupt Sources

The IIC issues five types of interrupt requests:

- Transfer error or event generation (arbitration-lost, NACK detection, timeout detection, start condition detection, and stop condition detection)
- Receive data full
- Transmit data empty
- Transmit end
- Address match during wakeup function

Table 27.10 lists details about the interrupt requests. The receive data full and transmit data empty interrupts can activate data transfer by the DTC or DMAC.

Table 27.10 Interrupt sources

Symbol	Interrupt source	Interrupt flag	DTC or DMAC activation	Interrupt condition
IICn_EEI*5	Transfer error or event occurrence	AL	Not possible	AL = 1, ALIE = 1
		NACKF		NACKF = 1, NAKIE = 1
		TMOF		TMOF = 1, TMOIE = 1
		START		START = 1, STIE = 1
		STOP		STOP = 1, SPIE = 1
IICn_RXI*2 *5	Receive data full	RDRF	Possible	RDRF = 1, RIE = 1
IICn_TXI*1 *5	Transmit data empty	RDRF	Possible	TDRE = 1, TIE = 1
IICn_TEI*3 *5	Transmit end	TEND	Not possible	TEND = 1, TEIE = 1
IIC0_WUI*4	Slave address match during wakeup function	WUF	Not possible	Slave address match Slave receive complete RWAK operation ASY0 = 1 WUIE = 1

Note: There is a delay between the execution of a write instruction for a peripheral module by the CPU and the actual writing to the module. When an interrupt flag is cleared or masked, read the relevant flag again to check whether clearing or masking is complete, then return from interrupt handling. Not doing so creates the possibility of repeated processing of the same interrupt.

Note 1. Because IICn_TXI is edge-detected, it does not require clearing. Additionally, the TDRE flag in ICSR2 (condition for IICn_TXI) is automatically set to 0 when transmit data is written to the ICDRT register or a stop condition is detected (STOP flag = 1 in ICSR2).

Note 2. Because IICn_RXI is edge-detected, it does not require clearing. Additionally, the RDRF flag in ICSR2 (condition for IICn_RXI) is automatically set to 0 when data is read from ICDRR.

Note 3. When using the IICn_TEI interrupt, clear the TEND flag in ICSR2 in the IICn_TEI interrupt handling. The TEND flag in ICSR2 automatically is set to 0 when transmit data is written to the ICDRT register or a stop condition is detected (STOP flag = 1 in ICSR2).

Note 4. Only channel 0 has a wakeup function, so IIC0_WUI is for channel 0 only.

Note 5. Channel number (n = 0, 1).

Clear or mask each flag during interrupt handling.

27.14.1 Buffer Operation for IICn_TXI and IICn_RXI Interrupts

If the conditions for generating an IICn_TXI or IICn_RXI interrupt are satisfied while the associated IR flag is 1, the interrupt request is not output for the ICU but is saved internally. One request per source can be saved internally.

An interrupt request that is saved in the ICU is output when the ICU.IELSRn.IR flag becomes 0. Internally saved interrupt requests are automatically cleared under normal conditions. They can also be cleared by writing 0 to the interrupt enable bit within the associated peripheral module.

27.15 State of Registers When Issuing Each Condition

The IIC has two dedicated resets, IIC reset and Internal reset. Table 27.11 lists the registers states when issuing each condition.

Table 27.11 Register states when issuing each condition (1 of 2)

Registers		Reset	IIC reset (ICE = 0, IICRST = 1)	Internal reset (ICE = 1, IICRST = 1)	Start or restart condition detection	Stop condition detection
ICCR1	ICE, IICRST	In reset	Saved	Saved	Saved	Saved
	SCLO, SDAO		In reset	In reset		
	Others			Saved		
ICCR2	BBSY	In reset	In reset	Saved	Set	In reset
	ST, RS			In reset	In reset	Saved
	SP					In reset
	TRS				Set or saved	
	MST					

Table 27.11 Register states when issuing each condition (2 of 2)

Registers		Reset	IIC reset (ICE = 0, IICRST = 1)	Internal reset (ICE = 1, IICRST = 1)	Start or restart condition detection	Stop condition detection
ICMR1	BC[2:0]	In reset	In reset	In reset	In reset	Saved
	Others			Saved	Saved	
ICMR2		In reset	In reset	Saved	Saved	Saved
ICMR3	ACKBT	In reset	In reset	Saved	Saved	In reset
	Others					Saved
ICFER		In reset	In reset	Saved	Saved	Saved
ICSER		In reset	In reset	Saved	Saved	Saved
ICIER		In reset	In reset	Saved	Saved	Saved
ICSR1		In reset	In reset	In reset	Saved	In reset
ICSR2	TEND	In reset	In reset	In reset	Saved	In reset
	TDRE				Set or saved	
	START				Set	
	STOP				Saved	Set
	Others				Saved	Saved
ICWUR		In reset	In reset	Saved	Saved	Saved
SARL0, SARL1, SARL2 SARU0, SARU1, SARU2		In reset	In reset	Saved	Saved	Saved
ICBRH, ICBRL		In reset	In reset	Saved	Saved	Saved
ICDRT		In reset	In reset	Saved	Saved	Saved
ICDRR		In reset	In reset	Saved	Saved	Saved
ICDRS		In reset	In reset	In reset	Saved	Saved
Timeout function		In reset	In reset	In reset	Operating	Operating
Bus free time measurement		In reset	In reset	Operating	Operating	Operating
ICWUR2	WUSEN	In reset	In reset	Saved	Saved	Saved
	Others					Saved or set or reset

27.16 Event Link Output

The IIC0 module handles the event output for the Event Link Controller (ELC) for the following sources:

(1) Transfer error event

When a transfer error event occurs, the associated event signal can be output to another module by the ELC.

(2) Receive data full

When a receive data register becomes full, the associated event signal can be output to another module by the ELC.

(3) Transmit data empty

When a transmit data register becomes empty, the associated event signal can be output to another module by the ELC.

(4) Transmit end

On completion of the transfer, the associated event signal can be output to another module by the ELC.

27.16.1 Interrupt Handling and Event Linking

Each of the IIC interrupt types (see Table 27.10) has an enable bit to control enabling and disabling of the associated interrupt signal. An interrupt request signal is output to the CPU when an interrupt source condition is satisfied while the associated enable bit is set.

The associated event link output signals are sent to other modules as event signals by the ELC when the interrupt source conditions are satisfied, regardless of the interrupt enable bit settings. For details on interrupt sources, see Table 27.10.

27.17 Usage Notes

27.17.1 Settings for the Module-Stop Function

The Module Stop Control Register B (MSTPCRB) can enable or disable IIC operation. The IIC is initially stopped after reset. Releasing the module-stop state enables access to the registers. For details, see section 10, Low Power Modes.

27.17.2 Notes on Starting Transfer

If the IR flag associated with the IIC interrupt is 1 when transfer is started (ICCR1.ICE bit = 1), follow the procedure in this section to clear the interrupts before enabling operations. Starting transfer with the IR flag set to 1 while the ICCR1.ICE bit is 1 leads to an interrupt request being internally saved after transfer starts, and this can lead to unexpected behavior of the IR flag.

To clear interrupts before starting transfer operation:

1. Confirm that the ICCR1.ICE bit is 0.
2. Set the relevant interrupt enable bits, such as ICIER.TIE to 0.
3. Read the relevant interrupt enable bits, such as ICIER.TIE, and confirm that the value is 0.
4. Set the IR flag to 0.

28. Serial Interface UARTA (UARTA)

28.1 Overview

Table 28.1 lists specifications of the serial interface UARTA.

Table 28.1 UARTA specifications

Item	Specifications
Serial interface modes	• Operation stop mode • UART mode
Interfaces	• TxDAn: Transmit data output pin • RxDAn: Receive data input pin • CLKAn: Transmit clock output pin
Operation clock sources	Operating clock independent of the system/peripheral module clock selectable to UARTAMCLK, UARTALCLK, UARTASCLK, UARTAHCLK, and UARTAMOCLK
Transfer rate	Up to 153.6 kbps
Baud rate	Settable with the dedicated internal 8-bit baud rate generator
Data format	• MSB-first or LSB-first selectable • Transfer bit length selectable to 5, 7, or 8 bits
Interrupt sources	• Transfer completion interrupt • Reception transfer end • Reception error interrupt
Other functions	• Transmission and reception independent of each other (full-duplex communication) • Inversion control of communication logic level provided
Module-stop function	Module-stop state can be set to reduce power consumption
TrustZone Filter	Security attribution can be set

Note:
- UARTAMCLK: UARTA external clock
- UARTASCLK: UARTA sub clock
- UARTAHCLK: UARTA HOCO clock
- UARTAMOCLK: UARTA MOCO clock
- UARTALCLK: UARTA LOCO clock

Note: n: Unit number (n = 0, 1)

Figure 28.1 shows a block diagram of UARTAn and Table 28.2 shows the pin configuration of UARTAn.

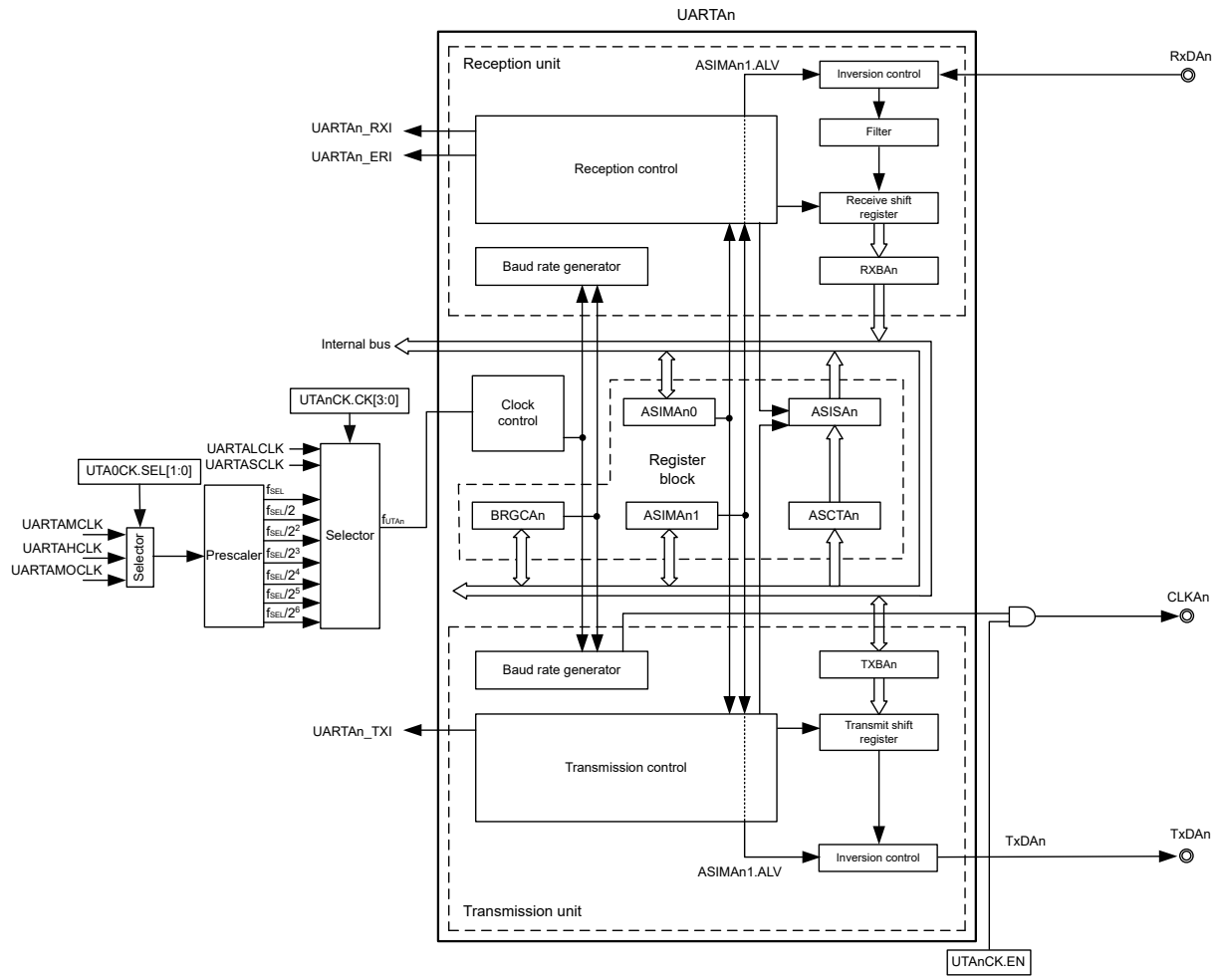

Note:
- f_{SEL}: Selected clock to be divided for the UARTA
- f_{UTAn}: UARTAn operation clock
- UARTAMCLK: UARTA external clock
- UARTASCLK: UARTA sub clock
- UARTAHCLK: UARTA HOCO clock
- UARTAMOCLK: UARTA MOCO clock
- UARTALCLK: UARTA LOCO clock

Note: n: Unit number (n = 0, 1)

Figure 28.1 Block diagram of UARTAn

Table 28.2 UARTAn pin configuration

Name	I/O	Function
RxDAn	Input	Serial data input signal
TxDAn	Output	Serial data output signal
CLKAn	Output	Serial clock output signal

Note: n: Unit number (n = 0, 1)

28.2 Register Descriptions

28.2.1 TXBAn : Transmit Buffer Register n (n = 0, 1)

Base address: UARTA = 0x4009_7000

Offset address: 0x00 + 0x8 × n

Bit position:	7	6	5	4	3	2	1	0
Bit field:								
Value after reset:	1	1	1	1	1	1	1	1

Bit	Symbol	Function	R/W
7:0	n/a	Transmit data buffer	R/W

TXBAn is a buffer register for setting transmit data.

Transmission starts by writing data for transmission to the TXBAn register.

When a character length of 8 bits is specified:

- Data in bits [7:0] of TXBAn are transferred.

When a character length of 7 bits is specified:

- Data in bits [6:0] of TXBAn are transferred in either MSB- or LSB-first mode. Bit 7 is invalid.

When a character length of 5 bits is specified:

- Data in bits [4:0] of TXBAn are transferred in either MSB- or LSB-first mode. Bits [7:5] are invalid.

Note: When the TXBFA bit of the ASISAn register is 1, do not write data for transmission to the TXBAn register.

Note: After setting the TXEA bit of the ASIMAn0 register to 1, wait for the period of at least one cycle of the UARTAn operation clock (f_{UTAn}) before setting the first data for transmission in the TXBAn register. If data for transmission is set within one cycle of the UARTAn operation clock after the ASIMAn0.TXEA bit is set to 1, the start of transmission is delayed by one cycle of the UARTAn operation clock.

Note: Data is transferred from the TXBAn register to this register, and is then transmitted as serial data through the TxDAn pin. In the first transmission, data is transferred from the TXBAn register to this register immediately after data is written to the TXBAn register. In continuous transmission, data is transferred after transmission of one frame and just before generation of the transfer completion interrupt.

The transmit shift register cannot be manipulated directly by software.

28.2.2 RXBAn : Receive Buffer Register n (n = 0, 1)

Base address: UARTA = 0x4009_7000

Offset address: 0x01 + 0x8 × n

Bit position:	7	6	5	4	3	2	1	0
Bit field:								
Value after reset:	1	1	1	1	1	1	1	1

Bit	Symbol	Function	R/W
7:0	n/a	Receive data buffer	R

The RXBAn register stores the parallel data converted by the receive shift register. Every time one byte of data is received, the next receive data is transferred from the receive shift register [*1] to this register.

Note 1. The receive shift register converts the serial data that is input through the RxDAn pin to parallel data.

The receive shift register cannot be manipulated directly by software.

When a character length of 8 bits is specified:

- Receive data is transferred to bits [7:0] of this register.

When a character length of 7 bits is specified:

- Receive data is transferred to bits [6:0] of this register in either MSB- or LSB-first mode. Bit 7 is always 0.

When a character length of 5 bits is specified:

- Receive data is transferred to bits [4:0] of this register in either MSB- or LSB-first mode. Bits [7:5] are always 0.

Note: If an overrun error (ASISAn.OVEA) occurs, the data received at that time is not stored in the RXBAn register.

28.2.3 ASIMAn0 : Operation Mode Setting Register n0 (n = 0, 1)

Base address: UARTA = 0x4009_7000

Offset address: 0x02 + 0x8 × n

Bit position:	7	6	5	4	3	2	1	0
Bit field:	EN	TXEA	RXEA	—	—	—	ISSMA	ISRMA
Value after reset:	0	0	0	0	0	0	0	1

Bit	Symbol	Function	R/W
0	ISRMA	Receive interrupt mode select 0: The UARTAn_ERI interrupt is generated when a reception error occurs (UARTAn_RXI is not generated) 1: The UARTAn_RXI interrupt is generated when a reception error occurs (UARTAn_ERI is not generated)	R/W
1	ISSMA	Transmit interrupt mode select 0: The UARTAn_TXI interrupt is generated on completion of transmission 1: The UARTAn_TXI interrupt is generated when the transmit buffer becomes empty (for continuous transmission)	R/W
4:2	—	These bits are read as 0. The write value should be 0.*1	R/W
5	RXEA	Reception enable 0: Disables reception (reset the reception circuit) 1: Enables reception	R/W
6	TXEA	Transmission enable 0: Disables transmission (resets the transmission circuit) 1: Enables transmission	R/W
7	EN*2	UART operation enable 0: Disables the UART operation clock (resets the internal circuits*3) 1: Enables the UART operation clock	R/W

Note 1. Be sure to clear bits [4:2] to 0.

Note 2. When EN = 0, the level being output from the TxDAn pin and the level being input from the RxDAn pin are determined according to the setting of the ASIMAn1.ALV bit as follow:

- When ASIMAn1.ALV = 0, output from the TxDAn pin is high.
- When ASIMAn1.ALV = 1, output from the TxDAn pin is low.

Note 3. The ASISAn and RXBAn registers are reset by clearing the EN bit to 0.

The ASIMAn0 register controls serial communication of the serial interface UARTAn.

To start transmission, set the EN bit to 1 and then set the TXEA bit to 1. To stop transmission, clear the TXEA bit to 0 and then clear the EN bit to 0.

To start reception, set the EN bit to 1 and then set the RXEA bit to 1. To stop reception, clear the RXEA bit to 0 and then clear the EN bit to 0.

Use the following procedure when setting the EN bit to 1 and then setting the RXEA bit to 1.

- When ASIMAn1.ALV = 0

The setting must be made while the level being input to the RxDAn pin is high. Otherwise, reception starts at that point and a framing error may occur.

- When ASIMAn1.ALV = 1
  The setting must be made while the level being input to the RxDAn pin is low. Otherwise, reception starts at that point and a framing error may occur.

The TXEA and RXEA bits are synchronized with the UARTAn operation clock (f_{UTAn}).

To enable transmission or reception again, set the TXEA or RXEA bit to 1 at least two cycles of the UARTAn operation clock after clearing the TXEA or RXEA bit to 0. If the bit is set to 1 within two cycles of the UARTAn operation clock after the clearing, the transmission or reception circuit may not be able to initialize.

After setting TXEA bit to 1, wait for at least one cycle of the UARTAn operation clock (f_{UTAn}) before setting the transmit data in the TXBAn register.

Clear the RXEA bit to 0 before modifying the ISRMA bit.

28.2.4 ASIMAn1 : Operation Mode Setting Register n1 (n = 0, 1)

Base address: UARTA = 0x4009_7000

Offset address: 0x03 + 0x8 × n

Bit position:	7	6	5	4	3	2	1	0
Bit field:	—	PS[1:0]		CL[1:0]		SL	DIR	ALV
Value after reset:	0	0	0	1	1	0	1	0

Bit	Symbol	Function	R/W
0	ALV	Transmission and reception level setting 0: Positive logic (wait state = high level, start bit = low level, stop bit = high level) 1: Negative logic (wait state = low level, start bit = high level, stop bit = low level)	R/W
1	DIR	Transmission and reception order setting 0: MSB-first 1: LSB-first	R/W
2	SL	Transmission stop bit length setting 0: Stop bit length = 1 bit 1: Stop bit length = 2 bits	R/W
4:3	CL[1:0]	Transmission and reception character length setting 0 0: Character length of data = 5 bits 0 1: Setting prohibited 1 0: Character length of data = 7 bits 1 1: Character length of data = 8 bits	R/W
6:5	PS[1:0]	Transmission and reception parity bit setting 0 0: Transmission: No parity bit is output. Reception: Data is received without parity. 0 1: Transmission: 0 parity is output. Reception: Data is received with 0 parity.*1 1 0: Transmission: Odd parity is output. Reception: Check is made for odd parity. 1 1: Transmission: Even parity is output. Reception: Check is made for even parity.	R/W
7	—	This bit is read as 0. The write value should be 0.	R/W

Note 1. When “Data is received with 0 parity” is set, parity check is not performed. Accordingly the PEA bit of the ASISAn register is not set: no reception error interrupts are generated.

The ASIMAn1 register controls serial communication of the serial interface UARTAn.

The ASIMAn1 register must be modified while ASIMAn0.TXEA = 0 and ASIMAn0.RXEA = 0.

Clear both the ASIMAn0.TXEA and RXEA bits to 0 before modifying the ASIMAn1 register. Reception is always handled as including a stop bit. The setting of the SL bit does not affect reception.

28.2.5 BRGCAn : Baud Rate Generator Control Register n (n = 0, 1)

Base address: UARTA = 0x4009_7000

Offset address: 0x04 + 0x8 × n

Bit position:	7	6	5	4	3	2	1	0
Bit field:								
Value after reset:	1	1	1	1	1	1	1	1

Bit	Symbol	Function	R/W
7:0	n/a	Controls the UART baud rate (serial transfer speed) Selection of 8-bit counter output clock (f_{UTAn} / BRGCAn) 0x02: $f_{UTAn}/2$ 0x03: $f_{UTAn}/3$ ⋮ ⋮ 0xFC: $f_{UTAn}/252$ 0xFD: $f_{UTAn}/253$ 0xFE: $f_{UTAn}/254$ 0xFF: $f_{UTAn}/255$ Others: Setting prohibited	R/W

The BRGCAn register sets the frequency divisor for the 8-bit counter in the serial interface UARTAn.

Modify the BRG[7:0] bits while the ASIMAn0.TXEA and RXEA bits are 0 (in the transmission and reception stopped state). The baud rate is one half the frequency of the output clock signal from the 8-bit counter. For an example of the baud rate setting, see (c) Baud rate setting example.

28.2.6 ASISAn : Status Register n (n = 0, 1)

Base address: UARTA = 0x4009_7000

Offset address: 0x05 + 0x8 × n

Bit position:	7	6	5	4	3	2	1	0
Bit field:	—	—	TXBFA	TXSFA	—	PEA	FEA	OVEA
Value after reset:	0	0	0	0	0	0	0	0

Bit	Symbol	Function	R/W
0	OVEA	Overrun error flag 0: No error has occurred 1: An error has occurred	R
1	FEA	Framing error flag 0: No error has occurred 1: An error has occurred	R
2	PEA	Parity error flag 0: No error has occurred 1: An error has occurred	R
3	—	This bit is read as 0.	R
4	TXSFA	Transmit shift register data flag 0: Data is not being transmitted 1: Data is being transmitted	R
5	TXBFA	Transmit buffer data flag 0: No valid data exists in the TXBAn register 1: Valid data exists in the TXBAn register	R
7:6	—	These bits are read as 0.	R

The ASISAn register indicates the error status and the transmission status on completion of reception by the serial interface UARTAn. It consists of three error flag bits (PEA, FEA, and OVEA) and two transmission status flag bits (TXBFA and TXSFA).

The PEA, FEA, and OVEA bits are initialized by clearing the ASIMAn0.EN or RXEA bit to 0. These bits are also cleared by writing to the corresponding bit of the ASCTAn register. The TXBFA and TXSFA flags are initialized by clearing the ASIMAn0.EN or TXEA bit to 0.

For continuous transmission, be sure to check that the TXBFA flag is 0 after writing the first transmit data (the first byte) to the TXBAn register and then write the next transmit data (the second byte) to the TXBAn register. Otherwise, the transmit data becomes undefined. However, the TXBFA flag need not be checked when continuous transmission is performed using the buffer empty interrupt (ASIMAn0.ISSMA bit = 1).

When initializing the transmission unit (ASIMAn0.TXEA = 0) after completion of continuous transmission, be sure to check that the TXSFA flag is 0 after the transfer completion interrupt is generated, and then initialize the unit. Otherwise, the transmit data becomes undefined.

The operation of the PEA bit depends on the setting of the PS[1:0] bits of the ASIMAn1 register. For receive data, only the first one bit of the stop bits is checked regardless of the stop bit length. When an overrun error occurs, the next receive data is not written to the RXBAn register and is discarded.

OVEA flag (Overrun error flag)

[Clearing condition]

- The ASIMAn0.EN or RXEA bit is cleared to 0.
- 1 is written to the ASCTAn.OVECTA bit.

[Setting condition]

- The next reception is completed before the receive data in the RXBAn register is read.

FEA flag (Framing error flag)

[Clearing condition]

- The ASIMAn0.EN or RXEA bit is cleared to 0.
- 1 is written to the ASCTAn.FECTA bit.

[Setting condition]

- A stop bit is not detected when receiving data.

PEA flag (Parity error flag)

[Clearing condition]

- The ASIMAn0.EN or RXEA bit is cleared to 0.
- 1 is written to the ASCTAn.PECTA bit.

[Setting condition]

- The parity of the received data does not match the parity bit.

TXSFA flag (Transmit shift register data flag)

[Clearing condition]

- The ASIMAn0.EN or TXEA bit is cleared to 0.
- Data is transferred from the transmit shift register and then no subsequent data is transferred from the TXBAn register.

[Setting condition]

- Data is transferred from the TXBAn register. (Data is being transmitted.)

TXBFA flag (Transmit buffer data flag)

[Clearing condition]

- The ASIMAn0.EN or TXEA bit is cleared to 0.
- Data is transferred to the transmit shift register.

[Setting condition]

- Data is written to the TXBAn register. (Data exists in the TXBAn register.)

28.2.7 ASCTAn : Status Clear Trigger Register n (n = 0, 1)

Base address: UARTA = 0x4009_7000

Offset address: 0x06 + 0x8 × n

Bit position:	7	6	5	4	3	2	1	0
Bit field:	—	—	—	—	—	PECTA	FECTA	OVECTA
Value after reset:	0	0	0	0	0	0	0	0

Bit	Symbol	Function	R/W
0	OVECTA*1	Overrun error flag clear trigger 0: Does not clear the ASISAn.OVEA flag (the flag is retained) 1: Clears the ASISAn.OVEA flag	R/W
1	FECTA*1	Framing error flag clear trigger 0: Does not clear the ASISAn.FEA flag (the flag is retained) 1: Clears the ASISAn.FEA flag	R/W
2	PECTA*1	Parity error flag clear trigger 0: Does not clear the ASISAn.PEA flag (the flag is retained) 1: Clears the ASISAn.PEA flag	R/W
7:3	—	These bits are read as 0. The write value should be 0.	R/W

Note 1. When reading the ASCTAn register, 0 is returned.

The ASCTAn register sets the trigger to clear the error status on completion of reception of the serial interface UARTAn. It contains 3 bits of the error clear trigger flags (PECTA, FECTA, and OVECTA).

When the ASCTAn register is read, 0x00 is always read.

Writing 1 to the PECTA, FECTA, and OVECTA bits clears the PEA, FEA, and OVEA flags of the ASISAn register, respectively. When writing 0, the corresponding error flags are not cleared.

After writing 1 to the trigger bit, the corresponding error flag is cleared on the next rising edge of the operating clock (f_{UTAn}). Accordingly, if reading the ASISAn register immediately after writing 1 to the trigger bit, the corresponding error flag may not have been cleared yet.

28.2.8 UTA0CK : UARTA Clock Select Register 0

Base address: UARTA = 0x4009_7000

Offset address: 0x10

Bit position:	7	6	5	4	3	2	1	0
Bit field:	EN	—	SEL[1:0]		CK[3:0]			
Value after reset:	0	0	0	0	0	0	0	0

Bit	Symbol	Function	R/W
3:0	CK[3:0]	UARTA0 operation clock select (f_{UTA0}) 0x0: f_{SEL} 0x1: $f_{SEL}/2$ 0x2: $f_{SEL}/4$ 0x3: $f_{SEL}/8$ 0x4: $f_{SEL}/16$ 0x5: $f_{SEL}/32$ 0x6: $f_{SEL}/64$ 0x8: UARTLCLK 0x9: UARTSCLK Others: Setting prohibited	R/W
5:4	SEL[1:0]	f_{SEL} clock select 0 0: Stop 0 1: UARTAMCLK 1 0: UARTAHCLK 1 1: UARTAMOCLK	R/W
6	—	This bit is read as 0. The write value should be 0.	R/W
7	EN	UARTA0 clock output function enable 0: Disables CLKA0 output 1: Enables CLKA0 output	R/W

Note:
- f_{SEL}: Selected clock to be divided for the UARTA
- UARTAMCLK: UARTA external clock
- UARTASCLK: UARTA sub clock
- UARTAHCLK: UARTA HOCO clock
- UARTAMOCLK: UARTA MOCO clock
- UARTALCLK: UARTA LOCO clock
- PCLKB > f_{UTA0}

The UTA0CK register selects the operating clock of the UARTAn. The SEL[1:0] bits select the clock source, f_{SEL}, for UARTAn from UARTAMCLK, UARTAHCLK, and UARTAMOCLK. The CK[3:0] bits select the operating clock for UARTA0 from f_{SEL} to $f_{SEL}/64$, UARTALCLK, and UARTASCLK.

Setting the EN bit to 1 selects the UARTA0 clock output mode, and the operating clock for UARTA0 is output from the CLKA0 pin.

This register should be read or written when the ASIMAn0.TXEA and RXEA bits are 0 (in the transmission and reception stopped state).

28.2.9 UTA1CK : UARTA Clock Select Register 1

Base address: UARTA = 0x4009_7000

Offset address: 0x11

Bit position:	7	6	5	4	3	2	1	0
Bit field:	EN	—	—	—	CK[3:0]			
Value after reset:	0	0	0	0	0	0	0	0

Bit	Symbol	Function	R/W
3:0	CK[3:0]	UARTA1 operation clock select (f_{UTA1}) 0x0: f_{SEL} 0x1: $f_{SEL}/2$ 0x2: $f_{SEL}/4$ 0x3: $f_{SEL}/8$ 0x4: $f_{SEL}/16$ 0x5: $f_{SEL}/32$ 0x6: $f_{SEL}/64$ 0x8: UARTLCLK 0x9: UARTSCLK Others: Setting prohibited	R/W
6:4	—	These bits are read as 0. The write value should be 0.	R/W
7	EN	UARTA1 clock output function enable 0: Disables CLKA1 output 1: Enables CLKA1 output	R/W

Note:
- f_{SEL}: Selected clock to be divided for the UARTA
- UARTALCLK: UARTA LOCO clock
- UARTASCLK: UARTA sub clock
- PCLKB > f_{UTA1}

The UTA1CK register selects the operating clock of UARTA1. The CK[3:0] bits select the operating clock for UARTA1 from f_{SEL} to $f_{SEL}/64$, UARTALCLK, and UARTASCLK.

Setting the EN bit to 1 selects the UARTA1 clock output mode, and the operating clock for UARTA1 is output from the CLKA1 pin.

This register should be read or written when the ASIMA10.TXEA and RXEA bits are 0 (in the transmission and reception stopped state).

28.3 Operation

UARTAn operates in the following two modes:

- Operation stop mode
- UART mode

28.3.1 Operation Stop Mode

In the operation stop mode, serial communication is not performed, and thus the power consumption can be reduced. In addition, in this mode, the pins can be used as ordinary port pins. To set the operation stop mode, clear the EX, TXEA, and RXEA bits of the ASIMAn0 register to 0.

28.3.2 UART Mode

In this mode, one byte of data is transmitted and one byte is received following the start bit. This means, operation is full duplex.

A dedicated UART baud rate generator is incorporated, so that communication can be executed at a wide range of baud rates.

(1) Communication procedure

Table 28.3 shows the step of communication procedure.

Table 28.3 Step of communication procedure

Step		Process	Detail
Step of communication procedure	<1>	Enable clock supply	Set bit 0 of the MSTPCRB register to 0.
	<2>	Baud rate setting	Set the BRGCAn register.
	<3>	Operation mode setting 1	Set the ALV, DIR, SL, CL[1:0], and PS[1:0] bits of the ASIMAn1 register.
	<4>	Operation mode setting 2	Set the ISSMA and ISRMA bits of the ASIMAn0 register.
	<5>	Enable operation	Set the EN bit of the ASIMAn0 register to 1.
	<6>	Enable communication	Set the TXEA bit of the ASIMAn0 register to 1 to enable transmission. Set the RXEA bit of the ASIMAn0 register to 1 to enable reception.
	<7>	Write transmit data	Write transmit data to the TXBAn register.
	<8>	Start of transmission	—

Note: Make I/O port settings to enable input and output functions as required for TXDAn, RXDAn, and CLKAn pins in advance. For details, see section 18, I/O Ports.

Note: n: Unit number (n = 0, 1)

(2) Format and waveform example of transmit and receive data

The following describes the communication data format of UARTAn.

Figure 28.2 shows the data format.

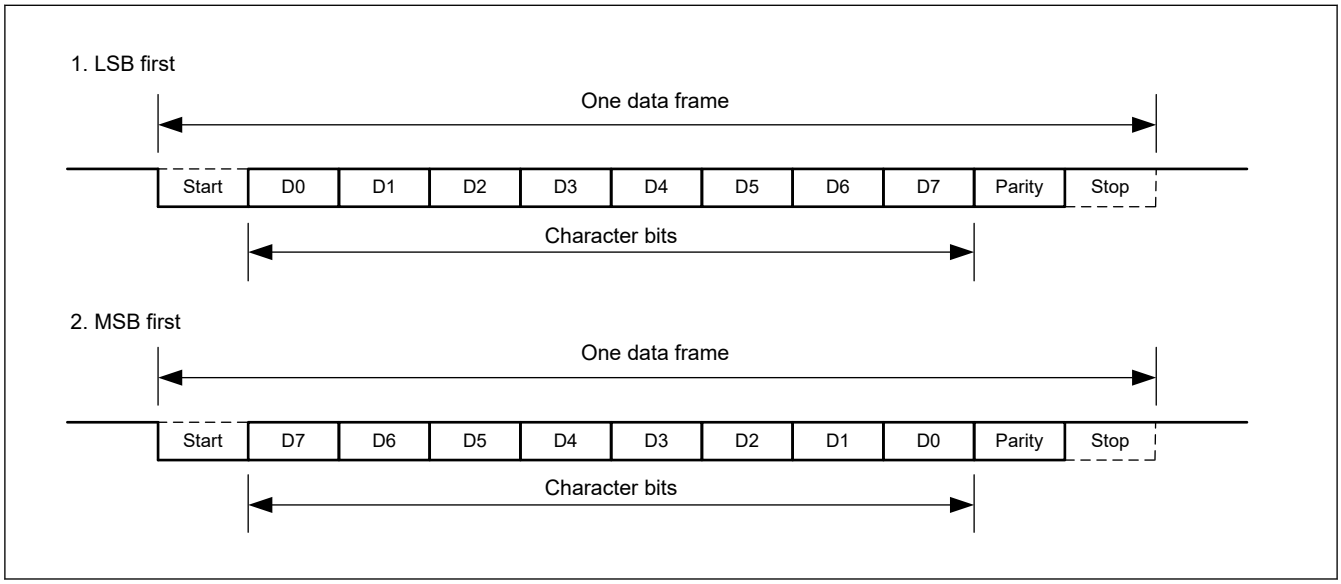

Figure 28.2 Transmit and receive data format

One data frame consists of the following bits.

- Start bit: 1 bit
- Character bits: 5, 7 or 8 bits
- Parity bit: Even parity, odd parity, 0 parity, or no parity
- Stop bit: 1 or 2 bits

The character bit length, the parity, the stop bit length, the transfer direction (LSB or MSB first), and the TxDAn pin output (direct or inverted) in one data frame are specified by the ASIMAn1 register.

Note: n: Unit number (n = 0, 1)

Figure 28.3 shows the examples of transmit and receive data waveforms.

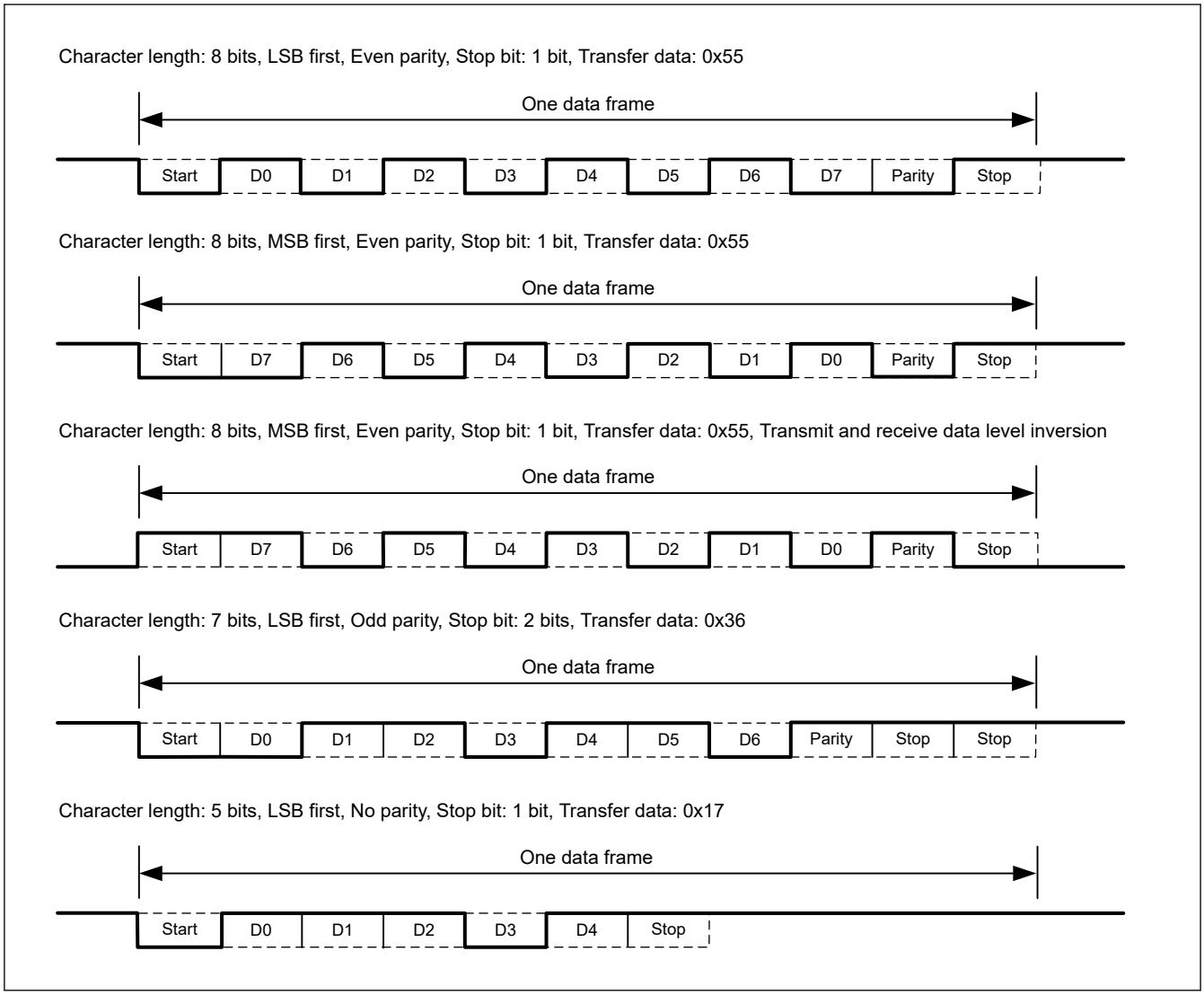

Figure 28.3 Example of transmit and receive data waveform

(3) Parity types and operation

The parity bit is used to detect a bit error in communication data. Usually, the same type of parity bit is used on both the transmitting and reception sides. With even and odd parity, a 1-bit (odd number) error can be detected. With zero and no parity, an error cannot be detected.

(a) Even parity

- In transmission
  Data for transmission, including the parity bit, are controlled so that an even number of bits have the value 1. The value of the parity bit is set as follows.
  If the data for transmission have an odd number of bits with the value 1:1
  If the data for transmission have an even number of bits with the value 1:0
- In reception
  In the data for reception, including the parity bit, the number of bits with the value 1, is counted. If it is odd, a parity error occurs.

(b) Odd parity

- In transmission
  Unlike even parity, data for transmission, including the parity bit, are controlled so that an odd number of bits have the value 1.
  If the data for transmission have an odd number of bits with the value 1:0
  If the data for transmission have an even number of bits with the value 1:1

- In reception
  In the data for reception, including the parity bit, the number of bits with the value 1, is counted. If it is even, a parity error occurs.

(c) 0 parity

The parity bit is cleared to 0 when data is transmitted, regardless of the transmit data.

The parity bit is not detected when the data is received. Therefore, a parity error does not occur regardless of whether the parity bit is 0 or 1.

(d) No parity

No parity bit is appended to the transmit data.

Reception is performed assuming that there is no parity bit. A parity error does not occur, because there is no parity bit.

(4) Normal transmission

Transmission is enabled by setting the EN bit of the operation mode setting register 0 (ASIMAn0) to 1 and then setting the TXEA bit of ASIMAn0 to 1. Transmission can be started by writing the data for transmission to the transmission buffer register (TXBAn). The start bit, parity bit, and stop bit are automatically appended to the data. When transmission is started, the data in the TXBAn register are transferred to the transmit shift register. After that, the transmit data are sequentially output from the transmit shift register to the TxDAn pin in the specified transfer direction. When transmission is completed, the parity and stop bits which are set by the ASIMAn0 register are appended and a transfer completion interrupt request signal (UARTAn_TXI) is generated.

Transmission is suspended until the next transmit data is written to the TXBAn register.

Figure 28.4 shows the timing of the transfer completion interrupt request signal (UARTAn_TXI). UARTAn_TXI is issued at the following timing.

a. When ASIMAn0.ISSMA = 0 (UARTAn_TXI functions as a transfer completion interrupt.)
   UARTAn_TXI is issued after the output of the last stop bit.

b. ASIMAn0.ISSMA = 1 (UARTAn_TXI functions as a buffer empty interrupt.)
   UARTAn_TXI is issued when the start bit is output.

Note: n: Unit number (n = 0, 1)

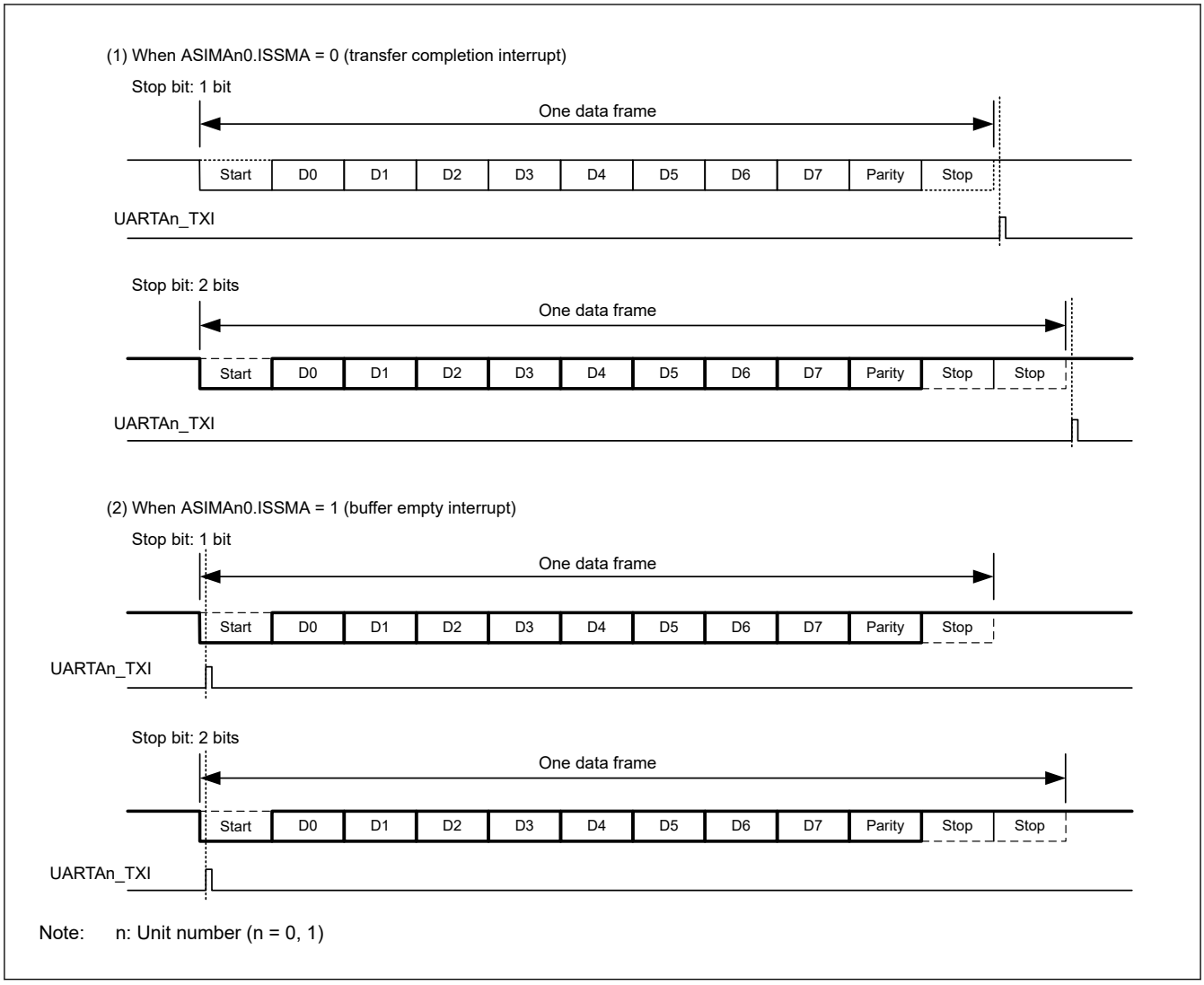

Figure 28.4 Interrupt output timing

(5) Continuous transmission

UARTAn has two separate registers for continuous transmission: the transmit buffer register (TXBAn) and the transmit shift register.

At the moment the transmit shift register starts a shift operation, the next transmit data can be written to the transmit buffer register (TXBAn). This operation enables continuous transmission, thereby improving communication rate.

Note that continuous transmission is not achieved when writing to the TXBAn register is not completed within the maximum number of clock cycles defined below from generation of the buffer empty interrupt.

Maximum number of clock cycles = Data transfer length × 2k − (2k + 3)

k: the value set with the BRGCAn register (k = 2, 3, 4, 5, 6, …, 255)

An example of calculating the maximum number of clock cycles is described below. When the BRGCAn register = 0x02 (k = 2),

start bit = 1 bit, character length = 8 bits, parity used, and stop bit = 1 bit:

The maximum number of clock cycles = Transfer length × 2k − (2k + 3) = 11 × 2 × 2 − (2 × 2 + 3) = 37

(Writing must be completed within 37 cycles of the UARTAn operating clock (f_{UTAn}).)

Continuous transmission is achieved by the following two methods.

(a) Continuous transmission by polling

Continuous transmission is achieved by polling the TXBFA and TXSFA flags of the status register (ASISAn).

When using this method, clear the ISSMA bit of the operation mode setting register 0 (ASIMAn0) to 0.

At the start of and during continuous transmission

At the start of continuous transmission, write the first byte of data to the TXBAn register, check that the transmit buffer data flag (ASISAn.TXBFA) is 0, and then write the second byte of data. In a similar way, check that the ASISAn.TXBFA flag is 0 and then write the subsequent data to the TXBAn register.

Table 28.4 shows the determination flag indicating that writing to the TXBAn register is enabled or disabled at the start of continuous transmission.

Table 28.4 Determination flag indicating that writing to the TXBAn register is enabled or disabled at the start of continuous transmission

ASISAn.TXBFA	Description
0	Writing is enabled.
1	Writing is disabled.

Note: To determine if continuous transmission is enabled or disabled, only check the ASISAn.TXBFA flag. The ASISAn.TXSFA flag must not be used for the determination in combination with this flag.
Note: n: Unit number (n = 0, 1)

Completion of continuous transmission

In continuous transmission, when data in the transmit shift register and the TXBAn register are transmitted after the required number of transmit data are written to the TXBAn register, the continuous transmission is completed. To confirm the completion, check the setting of the transmit shift register data flag (ASISAn.TXSFA).

Table 28.5 shows the confirmation flag indicating whether transmission is in progress or not.

Table 28.5 Confirmation flag indicating whether transmission is in progress or not

ASISAn.TXSFA	Description
0	Transmission is completed.
1	Transmission is in progress.

Note: When initializing the transmission unit after completion of continuous transmission, check that the ASISAn.TXSFA flag is 0 after the transfer completion interrupt is generated, and then initialize the unit.
Note: During continuous transmission, after transmission of one data frame, the subsequent transmission may be completed before execution of the UARTAn_TXI interrupt processing.
This can be detected by incorporating the program that counts the number of transmit data and by referencing the ASISAn.TXSFA flag.
Note: n: Unit number (n = 0, 1)

Table 28.6 shows a step example of continuous transmission processing by polling.

Table 28.6 Step example of continuous transmission processing by polling

Step		Process	Detail
Step example of continuous transmission processing by polling	<1>	Set registers	ASIMAn0.ISSMA = 0
	<2>	Check if the required number of transmit data are written to the TXBAn register. If yes, go to <5> If no, go to <3>	—
	<3>	Wait until the ASISAn.TXBFA flag is cleared.	Data is transferred to the transmit shift register.
	<4>	Write transmit data to the TXBAn register. Go to <2>	—
	<5>	Wait until the ASISAn.TXSFA flag is cleared.	Data is transferred from the transmit shift register and then no subsequent data is transferred from the TXBAn register.
	<6>	End of transmission processing	—

Note: n: Unit number (n = 0, 1)

(b) Continuous transmission by using an interrupt

Continuous transmission is achieved by using the interrupt (UARTAn_TXI).

An interrupt can be generated when data in the transmit buffer register (TXBAn) are transferred to the transmit shift register by setting the ISSMA bit to 1 in the operation mode setting register 0 (ASIMAn0).

With this setting, continuous transmission is enabled by writing data to the TXBAn register on occurrence of the buffer empty interrupt.

In addition, the transfer completion interrupt can be generated on completion of continuous transmission by clearing the ISSMA bit to 0 after writing the last transmit data to the TXBAn register.

Table 28.7 shows a step example of continuous transmission using interrupt.

Table 28.7 Step example of continuous transmission using interrupt

Step		Process	Detail
Step example of continuous transmission using interrupt	<1>	Set registers	ASIMAn0.ISSMA = 1
	<2>	Write to the TXBAn register	—
	<3>	Waiting for UARTAn_TXI	Buffer empty interrupt
	<4>	Generation of UARTAn_TXI	—
	<5>	Check if the required number of transmit data are written to the TXBAn register. If yes, go to step <6>. If no, go to step <2>.	—
	<6>	Set the ASIMAn0 register	ASIMAn0.ISSMA = 0
	<7>	Waiting for UARTAn_TXI	Transfer completion interrupt
	<8>	Generation of UARTAn_TXI	—
	<9>	End of transmission processing	—

Note: n: Unit number (n = 0, 1)

Figure 28.5 and Figure 28.6 show the timing when continuous transmission is started and completed, respectively.

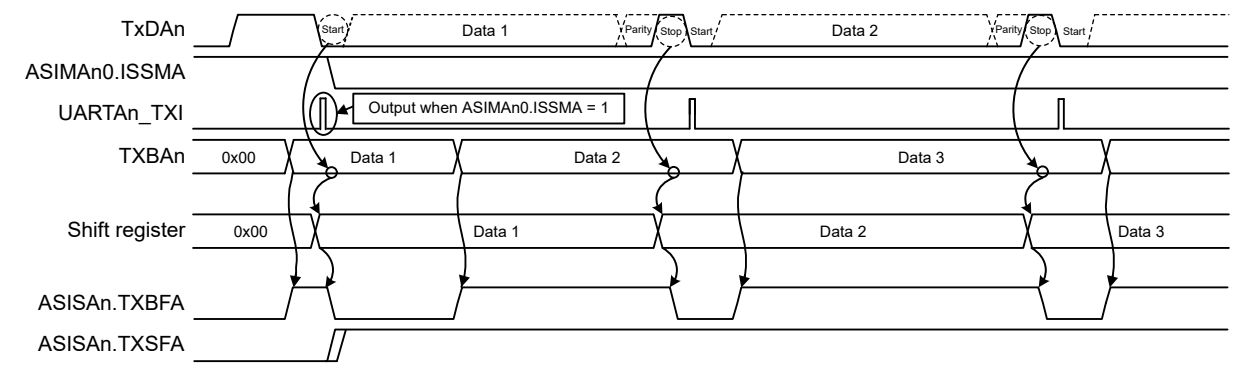

Note: n: Unit number (n = 0, 1)

Figure 28.5 Timing when continuous transmission is started

Note: When the ASISAn register is read, both the ASISAn.TXBFA and TXSFA flags are read as 1 within this period. Accordingly, use only the ASISAn.TXBFA flag to determine if writing is enabled or disabled.

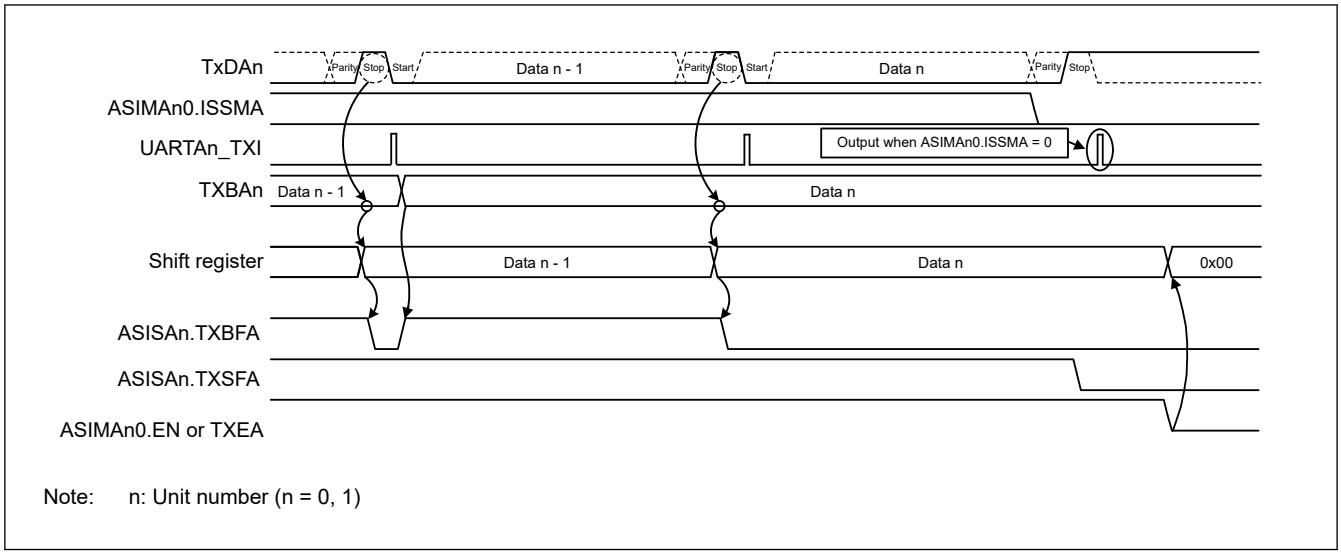

Figure 28.6 Timing when continuous transmission is completed

(6) Normal reception

When setting the EN bit of the operation mode setting register 0 (ASIMAn0) to 1 and then setting the RXEA bit of the ASIMAn0 register to 1, reception is enabled, and sampling of the input to the RxDAn pin is performed.

When the ASIMAn1.ALV bit is 0, the 8-bit counter of the baud rate generator starts counting on detection of the falling edge on the RxDAn pin. When the counter reaches the set value of the baud rate generator control register (BRGCAn), the input to the RxDAn pin is sampled again (at the point indicated with ∇ in Figure 28.7). If the RxDAn pin is low, it is regarded as a start bit.

When the ASIMAn1.ALV bit is 1, the 8-bit counter of the baud rate generator starts counting on detection of the rising edge on the RxDAn pin. When the counter reaches the set value of the baud rate generator control register (BRGCAn), the input to the RxDAn pin is sampled again (at the point indicated with ∇ in Figure 28.7). If the RxDAn pin is high, it is regarded as a start bit.

Figure 28.7 shows the timing chart of receive operation.

On detection of a start bit, receive operation is started: serial data is sequentially stored in the receive shift register at a specified baud rate. On reception of a stop bit, the transfer completion interrupt (UARTAn_RXI) is generated, and at the same time, the data in the receive shift register is written to the receive buffer register (RXBAn).

Note that when an overrun error (ASISAn.OVEA) occurs, the data received on occurrence of the error is not written to the RXBAn register.

When a parity error (ASISAn.PEA) or a framing error (ASISAn.FEA) occurs during reception, reception continues until a stop bit is received. After completion of the reception, the reception error interrupt (UARTAn_RXI or UARTAn_ERI) set in the ASIMAn0.ISRMA bit is generated.

When a reception error occurs, read the status register (ASISAn) and then read the receive buffer register (RXBAn) to clear the error flag.

If the receive buffer register (RXBAn) is not read, an overrun error will occur when the next data is received: the reception error state will continue.

Reception is always handled as including a stop bit. Accordingly, the second stop bit is ignored.

Note: n: Unit number (n = 0, 1)

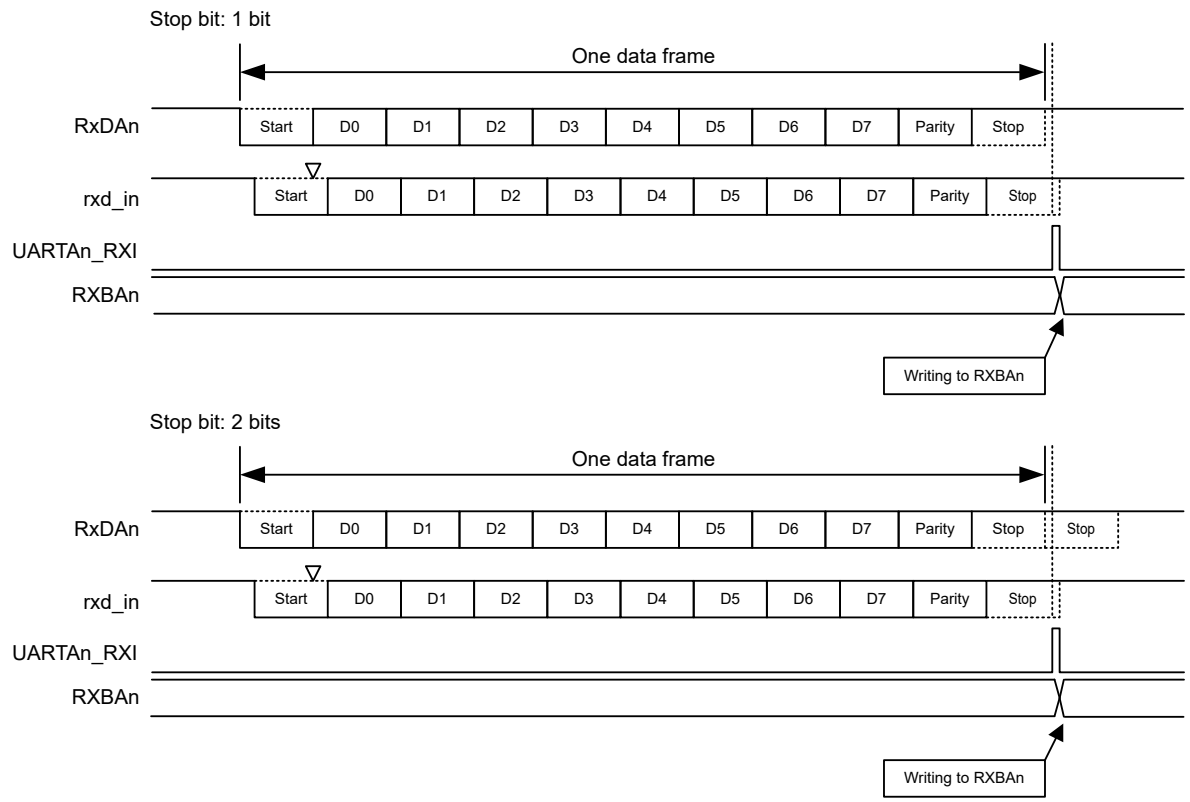

Note: rxd_in: The internal signal generated by latching RxDAn with a noise filter
(rxd_in is delayed relative to RxDAn by maximum of 3 cycles of the UART operation clock.)
Note: The UARTAn_RXI output timing in the figure is just an example.
The timing relative to RxDAn varies according to the setting of the BRGCAn register.
Note: n: Unit number (n = 0, 1)

Figure 28.7 Timing of UART receive operation

(7) Reception error

Three types of errors may occur during reception; parity error, framing error, and overrun error.

When these errors occur, the corresponding error flag in the status register (ASISAn) is set, and the reception error interrupt request signal (UARTAn_RXI or UARTAn_ERI) is generated.

The type of the reception error can be identified by the reception error interrupt processing routine, which reads and checks the contents of the status register (ASISAn).

The contents of the ASISAn register is cleared to 0 by setting the corresponding bit of the status clear trigger register (ASCTAn) to 1.

Table 28.8 shows the causes of the reception errors.

Table 28.8 Causes of reception errors

Error flag	Reception error	Cause
ASISAn.PEA	Parity error	The parity specified for reception does not match the parity of receive data.
ASISAn.FEA	Framing error	No stop bit is detected.
ASISAn.OVEA	Overrun error	Before the receive data is read from the receive buffer, the next data reception is completed.

Setting the ISRMA bit of the operation mode setting register 0 (ASIMAn0) to 0 allows the reception error interrupt to be separated from UARTAn_RXI and allows it to be generated as UARTAn_ERI.

Figure 28.8 shows the interrupt output waveform which varies depending on the setting of the ASIMAn0.ISRMA bit.

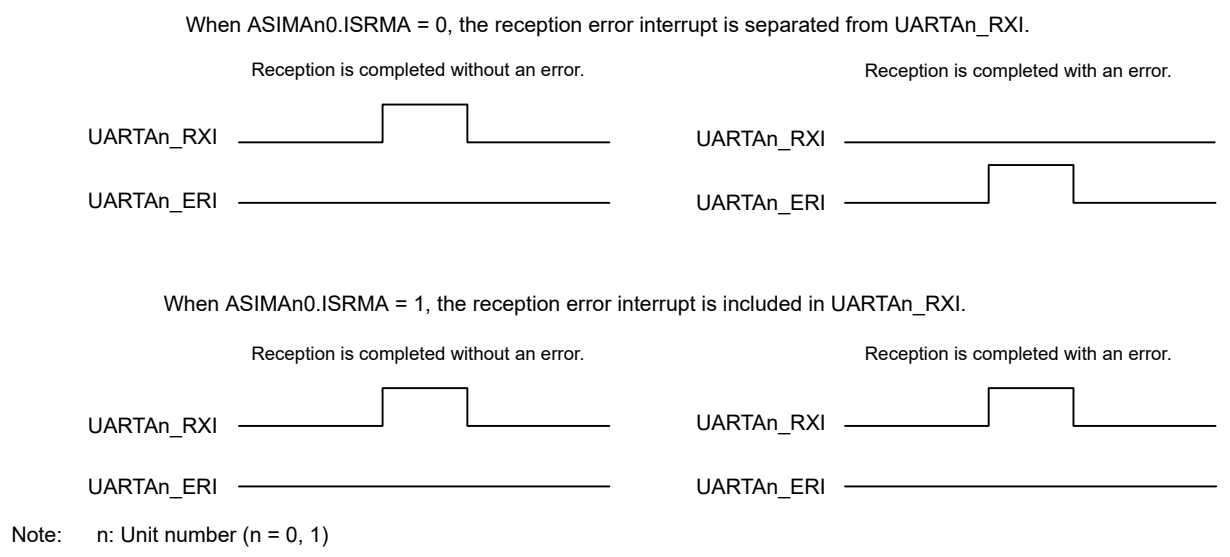

Note: n: Unit number (n = 0, 1)

Figure 28.8 Various interrupt output waveforms depending on ASIMAn0.ISRMA setting

28.3.3 Receive Data Noise Filter

This filter samples the receive data (RxDAn), and determines the level when the same level is sampled twice.

The receive data is delayed by a maximum of 3 cycles of the operating clock because of the circuit configuration.

Figure 28.9 shows the noise filter circuit.

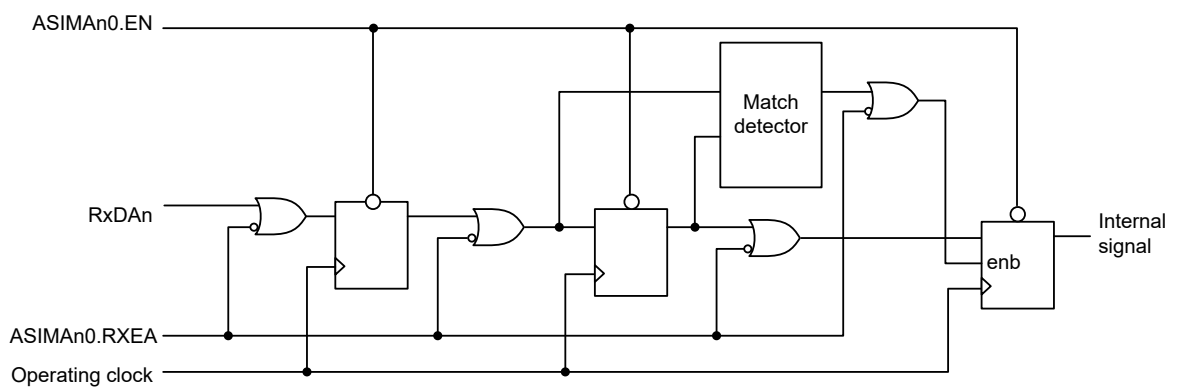

Note: When ASIMAn1.ALV = 0 (wait state = high level; start bit = low level), the initial value of the receive data (RxDAn) must be high.

Note: When ASIMAn1.ALV = 1 (wait state = low level; start bit = high level), the initial value of the receive data (RxDAn) must be low.

Note: n: Unit number (n = 0, 1)

Figure 28.9 Noise filter

28.3.4 Baud Rate Generator

The baud rate generator consists of 8-bit programmable counters, and generates a serial clock for transmission and reception of UARTAn.

An 8-bit counter is provided each for transmission and reception.

(1) Configuration of baud rate generator

(a) UARTAn operation clock

When ASIMAn0.EN = 1, the UARTAn operation clock (f_{UTAn}) is supplied to each module. When ASIMAn0.EN = 0, the UARTAn operation clock is fixed to low level.

(b) Transmission counter

This counter is cleared to 0 and stops when ASIMAn0.EN = 0 or ASIMAn0.TXEA = 0. It starts counting when ASIMAn0.EN = 1 and ASIMAn0.TXEA = 1.

The counter is cleared to 0 when the first transmit data is written to the transmit buffer register (TXBAn).

When continuous transmission is performed, the counter is cleared to 0 again when transmission of one frame of data has been completed. If there is no data to be transmitted next, the counter is not cleared to 0 and continues counting until the ASIMAn0.EN or TXEA bit is cleared to 0. When ASIMAn0.EN = 0 or ASIMAn0.TXEA = 0, the counter stops at 0x00.

(c) Reception counter

This counter is cleared to 0 and stops when ASIMAn0.EN = 0 or ASIMAn0.RXEA = 0. It starts counting when the start bit is detected.

The counter stops operation after one frame has been received, until the next start bit is detected. When ASIMAn0.EN = 0 or ASIMAn0.RXEA = 0, the counter stops at 0x00.

Note: n: Unit number (n = 0, 1)

Figure 28.10 shows the configuration of the baud rate generator.

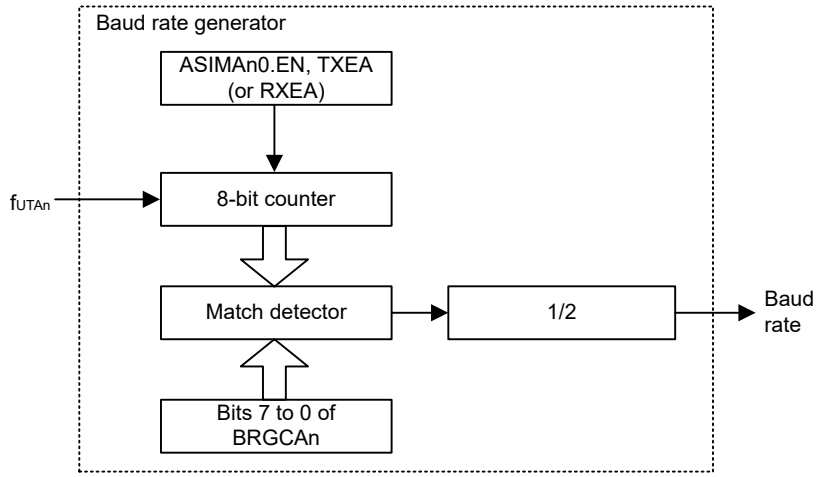

Note: n: Unit number (n = 0, 1)

Figure 28.10 Configuration of baud rate generator

(2) Generation of serial clock

A serial clock to be generated can be specified by using the baud rate generator control register (BRGCAn).

The baud rate generator divides the frequency of the input clock signal to the 8-bit counter (f_{UTAn}) by the divisor set by the BRGCAn register. The result of this division is further divided by 2 to produce the serial clock.

(3) Baud rate calculation

(a) Baud rate calculation expression

The baud rate can be calculated by the following expression.

Baud rate = $f_{UTAn} \div (2 \times k)$ [bps]

f_{UTAn}: Frequency of operating clock

k: Value set by bits 7 to 0 of the BRGCAn register (k = 2, 3, 4, …, 255)

(b) Baud rate error

The baud rate error can be calculated by the following expression.

$$\text{Error} = \left[\frac{\text{Actual baud rate (baud rate with error)}}{\text{Desired baud rate (correct baud rate)}} - 1\right] \times 100[\%]$$

Note: Keep the baud rate error during transmission to within the permissible error range on the reception side.

Note: Make sure that the baud rate error during reception satisfies the permissible baud rate error range during reception. Permissible baud rate error during reception is described in (d) Permissible baud rate range during reception.

Note: n: Unit number (n = 0, 1)

(c) Baud rate setting example

Table 28.9 to Table 28.12 show the set data of the baud rate generator.

Table 28.9 Set data of baud rate generator (1/4)

Desired baud rate	In operation with UARTAHCLK = 80 MHz (UTA0CK.SEL[1:0] = 10b)													
	No division		×1/2		×1/4		×1/8		×1/16		×1/32		×1/64	
	(UTAnCK.CK[3:0] = 0x0)		(UTAnCK.CK[3:0] = 0x1)		(UTAnCK.CK[3:0] = 0x2)		(UTAnCK.CK[3:0] = 0x3)		(UTAnCK.CK[3:0] = 0x4)		(UTAnCK.CK[3:0] = 0x5)		(UTAnCK.CK[3:0] = 0x6)	
	k	Error from the desired baud rate	k	Error from the desired baud rate	k	Error from the desired baud rate	k	Error from the desired baud rate	k	Error from the desired baud rate	k	Error from the desired baud rate	k	Error from the desired baud rate
200 bps	Disabled		Disabled		Disabled		Disabled		Disabled		Disabled		Disabled	
300 bps	Disabled		Disabled		Disabled		Disabled		Disabled		Disabled		Disabled	
600 bps	Disabled		Disabled		Disabled		Disabled		Disabled		Disabled		Disabled	
1200 bps	Disabled		Disabled		Disabled		Disabled		Disabled		Disabled		Disabled	
2400 bps	Disabled		Disabled		Disabled		Disabled		Disabled		Disabled		255	2.12%
4800 bps	Disabled		Disabled		Disabled		Disabled		Disabled		255	2.12%	130	0.16%
9600 bps	Disabled		Disabled		Disabled		Disabled		255	2.12%	130	0.16%	65	0.16%
19200 bps	Disabled		Disabled		Disabled		255	2.12%	130	0.16%	65	0.16%	33	-1.36%
38400 bps	Disabled		Disabled		255	2.12%	130	0.16%	65	0.16%	33	-1.36%	16	1.73%
76800 bps	Disabled		255	2.12%	130	0.16%	65	0.16%	33	-1.36%	16	1.73%	8	1.73%
115200 bps	Disabled		174	-0.22%	87	-0.22%	43	0.94%	22	-1.36%	11	-1.36%	Disabled	
153600 bps	255	2.12%	130	0.16%	65	0.16%	33	-1.36%	16	1.73%	8	1.73%	4	1.73%

Table 28.10 Set data of baud rate generator (2/4) (1 of 2)

Desired baud rate	In operation with UARTAMOCLK = 8 MHz (UTA0CK.SEL[1:0] = 11b)													
	No division		×1/2		×1/4		×1/8		×1/16		×1/32		×1/64	
	(UTAnCK.CK[3:0] = 0x0)		(UTAnCK.CK[3:0] = 0x1)		(UTAnCK.CK[3:0] = 0x2)		(UTAnCK.CK[3:0] = 0x3)		(UTAnCK.CK[3:0] = 0x4)		(UTAnCK.CK[3:0] = 0x5)		(UTAnCK.CK[3:0] = 0x6)	
	k	Error from the desired baud rate	k	Error from the desired baud rate	k	Error from the desired baud rate	k	Error from the desired baud rate	k	Error from the desired baud rate	k	Error from the desired baud rate	k	Error from the desired baud rate
200 bps	Disabled		Disabled		Disabled		Disabled		Disabled		Disabled		Disabled	
300 bps	Disabled		Disabled		Disabled		Disabled		Disabled		Disabled		208	0.16%
600 bps	Disabled		Disabled		Disabled		Disabled		Disabled		208	0.16%	104	0.16%
1200 bps	Disabled		Disabled		Disabled		Disabled		208	0.16%	104	0.16%	52	0.16%
2400 bps	Disabled		Disabled		Disabled		208	0.16%	104	0.16%	52	0.16%	26	0.16%
4800 bps	Disabled		Disabled		208	0.16%	104	0.16%	52	0.16%	26	0.16%	13	0.16%

Table 28.10 Set data of baud rate generator (2/4) (2 of 2)

Desired baud rate	In operation with UARTAMOCLK = 8 MHz (UTA0CK.SEL[1:0] = 11b)													
	No division		×1/2		×1/4		×1/8		×1/16		×1/32		×1/64	
	(UTAnCK.CK[3:0] = 0x0)		(UTAnCK.CK[3:0] = 0x1)		(UTAnCK.CK[3:0] = 0x2)		(UTAnCK.CK[3:0] = 0x3)		(UTAnCK.CK[3:0] = 0x4)		(UTAnCK.CK[3:0] = 0x5)		(UTAnCK.CK[3:0] = 0x6)	
	k	Error from the desired baud rate	k	Error from the desired baud rate	k	Error from the desired baud rate	k	Error from the desired baud rate	k	Error from the desired baud rate	k	Error from the desired baud rate	k	Error from the desired baud rate
9600 bps	Disabled		208	0.16%	104	0.16%	52	0.16%	26	0.16%	13	0.16%	Disabled	
19200 bps	208	0.16%	104	0.16%	52	0.16%	26	0.16%	13	0.16%	Disabled		Disabled	
38400 bps	104	0.16%	52	0.16%	26	0.16%	13	0.16%	Disabled		Disabled		Disabled	
76800 bps	52	0.16%	26	0.16%	13	0.16%	Disabled		Disabled		Disabled		Disabled	
115200 bps	35	-0.79%	17	2.12%	Disabled		Disabled		Disabled		Disabled		Disabled	
153600 bps	26	0.16%	13	0.16%	Disabled		Disabled		Disabled		Disabled		Disabled	

Table 28.11 Set data of baud rate generator (3/4)

Desired baud rate	In operation with UARTAMCLK = 20 MHz (UTA0CK.SEL[1:0] = 01b)													
	No division		×1/2		×1/4		×1/8		×1/16		×1/32		×1/64	
	(UTAnCK.CK[3:0] = 0x0)		(UTAnCK.CK[3:0] = 0x1)		(UTAnCK.CK[3:0] = 0x2)		(UTAnCK.CK[3:0] = 0x3)		(UTAnCK.CK[3:0] = 0x4)		(UTAnCK.CK[3:0] = 0x5)		(UTAnCK.CK[3:0] = 0x6)	
	k	Error from the desired baud rate	k	Error from the desired baud rate	k	Error from the desired baud rate	k	Error from the desired baud rate	k	Error from the desired baud rate	k	Error from the desired baud rate	k	Error from the desired baud rate
200 bps	Disabled		Disabled		Disabled		Disabled		Disabled		Disabled		Disabled	
300 bps	Disabled		Disabled		Disabled		Disabled		Disabled		Disabled		Disabled	
600 bps	Disabled		Disabled		Disabled		Disabled		Disabled		Disabled		255	2.12%
1200 bps	Disabled		Disabled		Disabled		Disabled		Disabled		255	2.12%	130	0.16%
2400 bps	Disabled		Disabled		Disabled		Disabled		255	2.12%	130	0.16%	65	0.16%
4800 bps	Disabled		Disabled		Disabled		255	2.12%	130	0.16%	65	0.16%	33	−1.36%
9600 bps	Disabled		Disabled		255	2.12%	130	0.16%	65	0.16%	33	−1.36%	16	1.73%
19200 bps	Disabled		255	2.12%	130	0.16%	65	0.16%	33	−1.36%	16	1.73%	8	1.73%
38400 bps	255	2.12%	130	0.16%	65	0.16%	33	−1.36%	16	1.73%	8	1.73%	4	1.73%
76800 bps	130	0.16%	65	0.16%	33	−1.36%	16	1.73%	8	1.73%	4	1.73%	Disabled	
115200 bps	87	−0.22%	43	0.94%	22	−1.36%	11	−1.36%	Disabled		Disabled		Disabled	
153600 bps	65	0.16%	33	−1.36%	16	1.73%	8	1.73%	4	1.73%	Disabled		Disabled	

Table 28.12 Set data of baud rate generator (4/4) (1 of 2)

Desired baud rate	In operation with UARTALCLK = 32.768 kHz (UTAnCK.CK[3:0] = 0x8)	
	k	Error from the desired baud rate
200 bps	82	−0.10%
300 bps	55	−0.70%
600 bps	27	−1.14%
1200 bps	14	−2.48%

Table 28.12 Set data of baud rate generator (4/4) (2 of 2)

Desired baud rate	In operation with UARTALCLK = 32.768 kHz (UTAnCK.CK[3:0] = 0x8)	
	k	Error from the desired baud rate
2400 bps	7	−2.48%
4800 bps	Disabled	
9600 bps	Disabled	
19200 bps	Disabled	
38400 bps	Disabled	
76800 bps	Disabled	
115200 bps	Disabled	
153600 bps	Disabled	

Note:
- UARTAMCLK: UARTA external clock
- UARTASCLK: UARTA sub clock
- UARTAHCLK: UARTA HOCO clock
- UARTAMOCLK: UARTA MOCO clock
- UARTALCLK: UARTA LOCO clock

Note: k: Value set by bits 7 to 0 of the baud rate generator control register (BRGCAn) (k = 2, 3, 4, …, 255)
n: Unit number (n = 0, 1)

(d) Permissible baud rate range during reception

Figure 28.11 shows the permissible error from the baud rate on the transmitting side during reception.

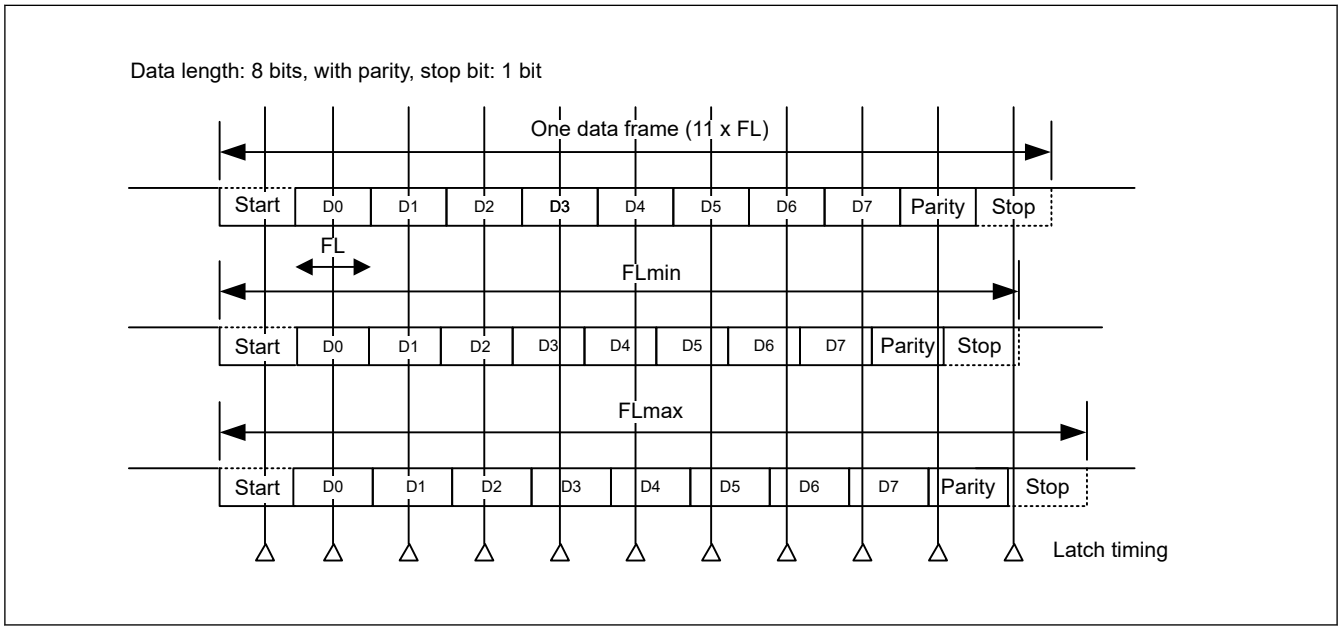

Figure 28.11 Permissible baud rate range during reception

Note: Be sure to make settings so that the baud rate error during reception is within the permissible error range. Use the calculation expression below to check if the error is within the permissible range.

After the start bit is detected, the latch timing of receive data is determined by the counter specified with the baud rate generator control register (BRGCAn). If the whole frame including the stop bit has been received before this latching, reception can proceed correctly.

Assuming that 11 bits of data are received, the theoretical values can be calculated as follows.

- The relation between 1-bit data length and baud rate
  FL = (Brate) - 1
  Brate: Baud rate of UART
  k: Set value of the BRGCAn register

FL: 1-bit data length
Margin of latch timing: 2 clock

- Minimum permissible data frame length (FLmin)
  $\mathrm{FLmin} = 11 \times \mathrm{FL} - \frac{k-2}{2k} \times \mathrm{FL} = \frac{21k+2}{2k}\mathrm{FL}$
- Maximum permissible baud rate for reception on the transmitting side (BRmax)
  $\mathrm{BRmax} = \frac{22k+1}{22k}\mathrm{Brate}$ (when $k = 2$)
  $\mathrm{BRmax} = (\mathrm{FLmin}/11)^{-1} = \frac{22k}{21k+2}\mathrm{Brate}$ (when $k \geq 3$)
- Maximum permissible data frame length (FLmax)
  $\mathrm{FLmax} = \frac{21k+2}{20k}\mathrm{FL} \times 11$
- Minimum permissible baud rate for reception on the transmitting side (BRmin)
  $\mathrm{BRmin} = \frac{22k-1}{22k}\mathrm{Brate}$ (when $k = 2$)
  $\mathrm{BRmin} = (\mathrm{FLmax}/11)^{-1} = \frac{20k}{21k-2}\mathrm{Brate}$ (when $k \geq 3$)

Table 28.13 shows the permissible baud rate error between UART and the transmitting side that can be calculated from the above minimum and maximum baud rate expressions.

Table 28.13 Maximum and minimum permissible baud rate error

Division ratio (k)	Maximum permissible baud rate error	Minimum permissible baud rate error
2	+2.27%	−2.27%
4	+2.33%	−2.44%
8	+3.53%	−3.61%
20	+4.27%	−4.31%
50	+4.56%	−4.58%
100	+4.66%	−4.67%
255	+4.72%	−4.73%

Note: The permissible error of reception depends on the number of bits in one frame, input clock frequency, and division ratio (k). The higher the input clock frequency and the division ratio (k), the higher the permissible error.
Note: k: Set value of the BRGCAn register
Note: n: Unit number (n = 0, 1)

28.4 Usage Notes

28.4.1 Port Setting for RxDAn Pin

When ASIMAn1.ALV = 0 (wait state = high level, start bit = low level), the initial value of receive data (RxDAn) must be high. When ASIMAn1.ALV = 1 (wait state = low level, start bit = high level), the initial value of receive data (RxDAn) must be low. Accordingly, port setting is required for the RxDAn pin before setting ASIMAn0.EN = 1.

28.4.2 Point for Caution when Selecting the UARTAn Operation Clock (f_{UTAn})

When UARTAMOCLK is selected for f_{UTAn}, communication may not be executed correctly due to the oscillation frequency accuracy of the middle-speed on-chip oscillator. Adjust the accuracy, therefore, by using the MOCO user trimming control register (MOCOUTCR).

When the low-speed on-chip oscillator peripheral clock (UARTALCLK) is selected for f_{UTAn}, communication may not be executed correctly due to the oscillation frequency accuracy of the low-speed on-chip oscillator. Adjust the accuracy, therefore, by using the LOCO user trimming control register (LOCOUTCR).

29. CAN with Flexible Data-rate (CANFD)

29.1 Overview

The CAN with Flexible Data-rate (CANFD) supports the following functions:

- CAN with Flexible Data-rate.*1

Note 1. This feature is not available in the classical CAN function.

The CANFD module has a flexible message buffer and FIFO structure that meet the requirements of various applications. It also provides test modes to achieve high testability of the module that can be useful for power-on testing.

This specification describes of the CANFD module.

29.1.1 CANFD Module

Table 29.1 CANFD module specifications (1 of 2)

Parameter		Specifications
Communication		CAN functionality conforms to CANFD ISO 11898-1 (2015)
Protocol engine version		RS-CANFD_PE V3.0
Data transfer rate	CANFD*1	Up to 1 Mbps for arbitration phase and up to 8 Mbps for data phase
	Classical CAN	Up to 1 Mbps
Operation frequency of Peripheral module clock		40 MHz (PCLKB) RAM clock: 80 MHz (PCLKA)
Data Link Layer (DLL) clock		8 MHz to 40 MHz The following clocks can be selected. ● CANMCLK : External Oscillator Clock ● CANFDCLK : CANFD Core Clock
Input/Output pins		CRXn/CTXn (n = 0)
CAN channels		1 channel
Selectable ID type		11-bit Standard ID
		11-bit Standard ID + 18-bit Extended ID
Selectable frame type		Data frame (RTR = 0) (CAN and CANFD frames)
		Remote frame (RTR = 1) (only CAN frames)
Variable data byte count for data frames		DLC range: 0 to F
Message buffer		Up to 16 reception message buffers
		4 transmit message buffers
		1 transmission queue Automatic message transfer into transmission queues supported
FIFO number		2 reception FIFO buffers 1 COMMON FIFO individually configurable as: ● Reception FIFO ● Transmission FIFO
Automatic delay interval timer for transmission		The delay timer can be applied to: ● Transmission FIFO

Table 29.1 CANFD module specifications (2 of 2)

Parameter	Specifications
Enhanced reception filtering	Support of 11 bits and 29 bits CAN identifier
	Programmable 29 bits CAN identifier acceptance filter mask for each entry
	Programmable routing capability for each FIFO and reception message buffers (up to 2 routing destinations)
	RTR and IDE masking
	Data Length Code (DLC) filter
	Message buffer payload overload protection
	Payload filter
	Updating Acceptance Filter List (AFL) entry during communication
General software support	Automatic label information added to receive message (for upper software layer support)
Timer	TX and RX Time Stamp function
Power down function	Module start stop function for CAN node (Channel and Global Sleep mode)
RAM	RAM ECC protected (2 bits error detection, 1-bit error correction)
Module-stop function	Module-stop state can be set to reduce power consumption.
TrustZone Filter	Security attribution can be set.

Note 1. The maximum reliable communication bit-rate depends on board-design and environmental factors. Sufficient evaluation is recommended on actual target hardware.

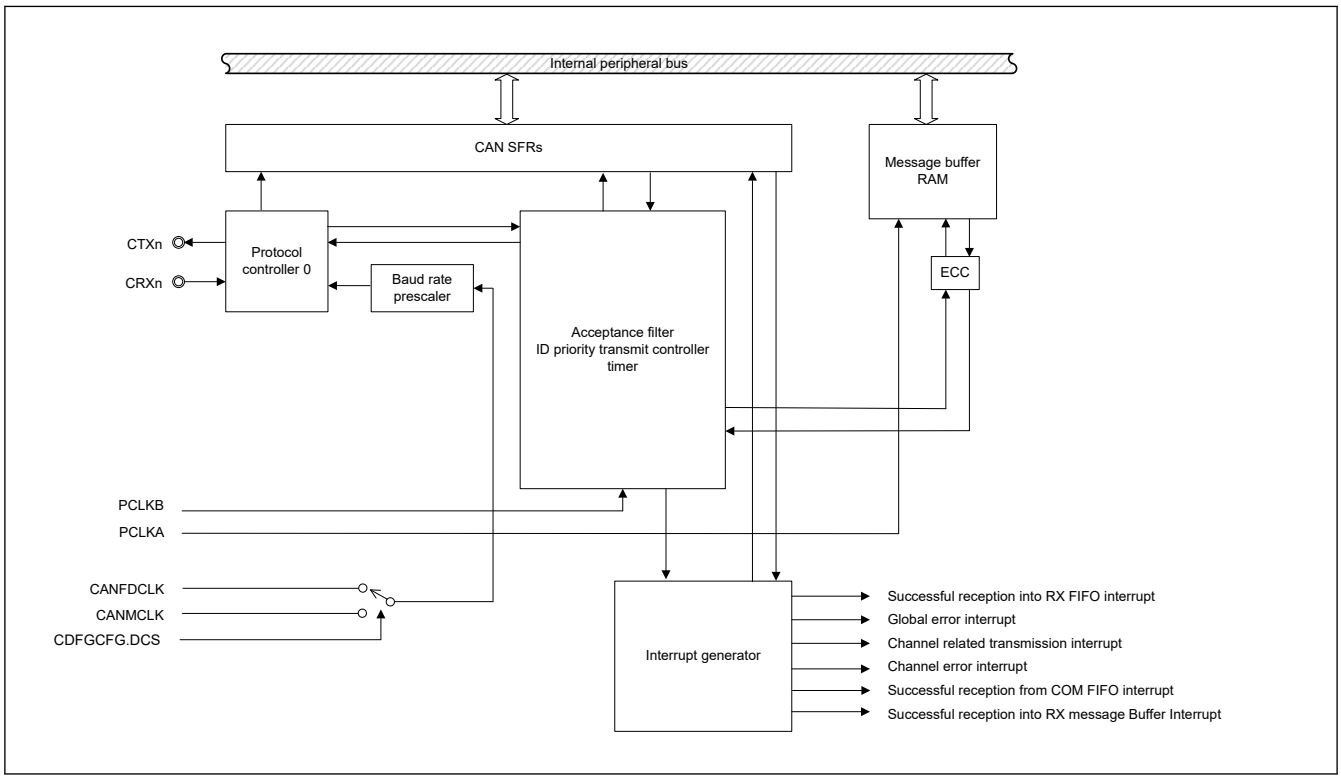

Figure 29.1 Overview of the CANFD module

- CRXn/CTXn:
  Input/Output pins of the CANFD module
- Protocol controller:
  Handles CAN protocol processing such as bus arbitration, bit timing at transmission and reception, stuffing, error handling

- Message buffer RAM (MBRAM):
  This RAM is used to store messages after reception or for transmission using a normal message buffer or a FIFO. Each message entry has an individual ID, data length code, data field, message pointer for upper layer application usage and a time stamp.
  This RAM is used to store the message acceptance filtering entries. Each acceptance filter entry has an individual ID, data length code, data field, message pointer for upper layer application usage and message direction pointer.
- Acceptance filter list RAM (AFLRAM):
  Performs filtering of received messages. The entries in the Acceptance filter list RAM are used for the filtering process.
- Two timers:
  - Reception Timestamp function
  - Transmission separation time for FIFO buffers
- Interrupt generator:
  Generates several types of global and channel interrupts
- CAN Special Function Registers (SFRs):
  Registers associated with CAN. See section 29.2. Register Descriptions.

29.1.2 Clock restriction

For the CAN communication the following restriction for the clocks should be satisfied:

- PCLKA / 2 = PCLKB ≥ CANFDCLK
- PCLKA / 2 = PCLKB ≥ CANMCLK

To avoid missing events the CAN engine clock (CANFDCLK or CANMCLK) frequency must be less than the PCLKB clock frequency.

To avoid loss of CAN message, the PCLKB should be set to a clock with a frequency depend on the CAN communication Baud Rate. The constraint of a baud rate and a PCLKB clock is shown in Table 29.2.

Table 29.2 Clock restriction

	Baud rate	PCLKB
CANFD	1 Mbps Nominal 8 Mbps Data*1	PCLKB = 40 MHz
	500 Kbps Nominal 5 Mbps Data	PCLKB ≥ 32 MHz
Classical CAN	1 Mbps Data	PCLKB ≥ 32 MHz

Note 1. The maximum reliable communication bit-rate depends on board-design and environmental factors. Sufficient evaluation is recommended on actual target hardware.

The frequency of CANFDCLK and CANMCLK depend on the required baud rate. For information how to configure the baud rate, refer to section 29.4.1.3. Baud Rate.

29.2 Register Descriptions

29.2.1 Register Table

The reset value shown for the RAM area, consisting of CFDGAFLIDr, CFDGAFLMr, CFDGAFLP0r, CFDGAFLP1r, CFDRMBCPb, CFDRFMBCPb, CFDCFMBCP0, CFDTMBCPb, CFDTHLACC0, CFDTHLACC1 and CFDRPGACCk is valid after initialization of a hardware reset. See section 29.4.2. CAN Module Configuration after Hardware Reset for details of the initialization process.

If a write access with a size of 8 or 16 bits is performed for the RAM area, then the CANFD module does a read-modify write-access to the RAM location, because the RAM requires a 32-bit access through the ECC module.

For single bit error, the correct data is written back. For multiple bit errors, unknown data is written back.

Do not access the space where the register is not assigned.

The read data from the space where the register is not assigned is unknown.

29.2.2 CFDC0NCFG : Nominal Baud Rate Configuration Register

Base address: CANFD = 0x400B_0000

Offset address: 0x0000

Bit position:	31						25	24						17	16					10	9								0
Bit field:	NTSEG2[6:0]							NTSEG1[7:0]							NSJW[6:0]						NBRP[9:0]								
Value after reset:	0	0	0	0	0	0	0	0	0	0	0	0	0	0	0	0	0	0	0	0	0	0	0	0	0	0	0	0	0

Bit	Symbol	Function	R/W
9:0	NBRP[9:0]	Channel Nominal Baud Rate Prescaler Nominal baud rate prescaler division ratio	R/W
16:10	NSJW[6:0]	Resynchronization Jump Width 0x00: 1 Tq 0x01: 2 Tq ⋮ 0x7E: 127 Tq 0x7F: 128 Tq	R/W
24:17	NTSEG1[7:0]	Timing Segment 1 0x00: Reserved 0x01: 2 Tq 0x02: 3 Tq 0x03: 4 Tq ⋮ 0xFE: 255 Tq 0xFF: 256 Tq	R/W
31:25	NTSEG2[6:0]	Timing Segment 2 0x00: Reserved 0x01: 2 Tq ⋮ 0x7E: 127 Tq 0x7F: 128 Tq	R/W

Note: Tq means time quantum.

This register configures the transmission/reception nominal baud rate parameters of the channels.

NBRP[9:0] bits (Channel Nominal Baud Rate Prescaler)

The NBRP[9:0] bits are used to define the peripheral bus clock periods contained in a time quantum.

Do not write to these bits in CH_OPERATION or CH_SLEEP mode.

Only write to these bits when the CANFD channel is in CH_RESET or CH_HALT mode.

NSJW[6:0] bits (Resynchronization Jump Width)

The NSJW[6:0] bits set the synchronization jump width. A value from 1 to 128 time quanta can be set.

Do not write to these bits in CH_OPERATION or CH_SLEEP mode.

Only write to these bits when the CANFD channel is in CH_RESET or CH_HALT mode.

NTSEG1[7:0] bits (Timing Segment 1)

The NTSEG1[7:0] bits set the segment TSEG1 to compensate for edges on the CAN bus with a positive phase error. These bits contain the propagation segment.

Do not write to these bits in CH_OPERATION or CH_SLEEP mode.

Only write to these bits when the CANFD channel is in CH_RESET or CH_HALT mode.

Additionally, configure a Tq value only between 2 and 256, inclusive. See section 29.4.1.2. CAN Bit Timing for more details.

NTSEG2[6:0] bits (Timing Segment 2)

The NTSEG2[6:0] bits set the segment TSEG2 to compensate for edges on the CAN bus with a negative phase error.

Do not write to these bits in CH_OPERATION or CH_SLEEP mode.

Only write to these bits when the CANFD channel is in CH_RESET or CH_HALT mode.

Additionally, configure a Tq value only between 2 and 128, inclusive.

29.2.3 CFDC0CTR : Control Register

Base address: CANFD = 0x400B_0000

Offset address: 0x0004

Bit position:	31	30	29	28	27	26	25	24	23	22	21	20	19	18	17	16
Bit field:	ROM	BFT	—	—	—	CTMS[1:0]		CTME	ERRD	BOM[1:0]		—	TDCVFIE	SOCOIE	EOCOIE	TAIE
Value after reset:	0	0	0	0	0	0	0	0	0	0	0	0	0	0	0	0

Bit position:	15	14	13	12	11	10	9	8	7	6	5	4	3	2	1	0
Bit field:	ALIE	BLIE	OLIE	BORIE	BOEIE	EPIE	EWIE	BEIE	—	—	—	—	RTBO	CSLPR	CHMDC[1:0]	
Value after reset:	0	0	0	0	0	0	0	0	0	0	0	0	0	1	0	1

Bit	Symbol	Function	R/W
1:0	CHMDC[1:0]	Channel Mode Control 0 0: Channel operation mode request 0 1: Channel reset request 1 0: Channel halt request 1 1: Keep current value	R/W
2	CSLPR	Channel Sleep Request 0: Channel sleep request disabled 1: Channel sleep request enabled	R/W
3	RTBO	Return from Bus-Off 0: Channel is not forced to return from bus-off 1: Channel is forced to return from bus-off	R/W
7:4	—	These bits are read as 0. The write value should be 0.	R/W
8	BEIE	Bus Error Interrupt Enable 0: Bus error interrupt disabled 1: Bus error interrupt enabled	R/W
9	EWIE	Error Warning Interrupt Enable 0: Error warning interrupt disabled 1: Error warning interrupt enabled	R/W
10	EPIE	Error Passive Interrupt Enable 0: Error passive interrupt disabled 1: Error passive interrupt enabled	R/W
11	BOEIE	Bus-Off Entry Interrupt Enable 0: Bus-off entry interrupt disabled 1: Bus-off entry interrupt enabled	R/W
12	BORIE	Bus-Off Recovery Interrupt Enable 0: Bus-off recovery interrupt disabled 1: Bus-off recovery interrupt enabled	R/W
13	OLIE	Overload Interrupt Enable 0: Overload interrupt disabled 1: Overload interrupt enabled	R/W
14	BLIE	Bus Lock Interrupt Enable 0: Bus lock interrupt disabled 1: Bus lock interrupt enabled	R/W

Bit	Symbol	Function	R/W
15	ALIE	Arbitration Lost Interrupt Enable 0: Arbitration lost interrupt disabled 1: Arbitration lost interrupt enabled	R/W
16	TAIE	Transmission Abort Interrupt Enable 0: TX abort interrupt disabled 1: TX abort interrupt enabled	R/W
17	EOCOIE	Error Occurrence Counter Overflow Interrupt Enable 0: Error occurrence counter overflow interrupt disabled 1: Error occurrence counter overflow interrupt enabled	R/W
18	SOCOIE	Successful Occurrence Counter Overflow Interrupt Enable 0: Successful occurrence counter overflow interrupt disabled 1: Successful occurrence counter overflow interrupt enabled	R/W
19	TDCVFIE*1	Transceiver Delay Compensation Violation Interrupt Enable 0: Transceiver delay compensation violation interrupt disabled 1: Transceiver delay compensation violation interrupt enabled	R/W
20	—	This bit is read as 0. The write value should be 0.	R/W
22:21	BOM[1:0]	Channel Bus-Off Mode 0 0: Normal mode (comply with ISO 11898-1) 0 1: Entry to Halt mode automatically at bus-off start 1 0: Entry to Halt mode automatically at bus-off end 1 1: Entry to Halt mode (during bus-off recovery period) by software	R/W
23	ERRD	Channel Error Display 0: Only the first set of error codes displayed 1: Accumulated error codes displayed	R/W
24	CTME	Channel Test Mode Enable 0: Channel test mode disabled 1: Channel test mode enabled	R/W
26:25	CTMS[1:0]	Channel Test Mode Select 0 0: Basic test mode 0 1: Listen-only mode 1 0: Self-test mode 0 (External loopback mode) 1 1: Self-test mode 1 (Internal loopback mode)	R/W
29:27	—	These bits are read as 0. The write value should be 0.	R/W
30	BFT	Bit Flip Test 0: First data bit of reception stream not inverted 1: First data bit of reception stream inverted	R/W
31	ROM*1	Restricted Operation Mode 0: Restricted operation mode disabled 1: Restricted operation mode enabled	R/W

Note 1. These bits are not available in the classical CAN function.

Channel Control register controls the modes of the related channel. It is used to enable generation of interrupts if errors are detected on the CAN bus connected to this channel. It is also used to configure the channel in test mode.

CHMDC[1:0] bits (Channel Mode Control)

The CHMDC[1:0] bits can be used to configure modes of the CAN channel.

CAN mode transitions are described in more details in section 29.3.3. Channel Modes.

Setting CHMDC[1:0] bits to 11b has no effect. When the CANFD module is in GL_HALT mode, these bits can only be set to 10b or 01b. These bits cannot be set in CH_SLEEP mode.

These bits can change automatically when transitioning to Halt mode by the CFDC0CTR.BOM settings.

If CPU write access to CFDC0CTR.CHMDC occurs at the same time when the CAN channel enters Halt mode (at the start of bus-off when CFDC0CTR.BOM = 01b, or at the end of bus-off when CFDC0CTR.BOM = 10b), then the CPU write access has the highest priority.

The CAN channel changes the value of CFDC0CTR.CHMDC within the Channel Control Registers for the specified cases only if the CFDC0CTR.CHMDC value is 00b (Operation mode).

CSLPR bit (Channel Sleep Request)

When the CSLPR bit is 1, a Sleep mode request is generated for the corresponding CAN channel

When this bit is 0, a request to exit Sleep mode is generated for the related CANFD channel.

Only write to this bit when the related CANFD channel is in CH_RESET or CH_SLEEP mode.

RTBO bit (Return from Bus-Off)

When the protocol controller of the CAN channel enters bus-off state, you can force a recovery from bus-off state by setting the RTBO bit in the Channel Control Register to 1.

The error state changes from bus-off state to integrating with a maximum delay of 1 CAN bit time.

When the RTBO bit is set to 1, the REC and TEC registers are initialized and the Bus-Off Status bit (Channel Bus-off Status, CFDC0STS.BOSTS) is set to 0.

Registers other than the REC and TEC registers are not initialized by this command. Even if CFDC0CTR.BORIE is set, a bus-off recovery interrupt is not generated by this recovery from the bus-off state.

The RTBO bit cannot be set in CH_SLEEP mode. Setting this bit in any state other than bus-off state has no effect and the bit is cleared immediately. The read value is always 0.

Return from the Bus-Off command should be used only when CFDC0CTR.BOM is set to 00b.

Only write to this bit when the related CANFD channel is in CH_OPERATION mode. This bit is automatically cleared when set by software.

BEIE bit (Bus Error Interrupt Enable)

When the BEIE and the CFDC0ERFL.BEF bits are both 1, an error interrupt request is generated.

This bit cannot be set in CH_SLEEP mode. Only write to this bit when the related CANFD channel is in CH_RESET mode.

EWIE bit (Error Warning Interrupt Enable)

When the EWIE and the CFDC0ERFL.EWF bits are both 1, an error interrupt request is generated.

The EWIE bit cannot be set in CH_SLEEP mode. Only write to this bit when the related CANFD channel is in CH_RESET mode.

EPIE bit (Error Passive Interrupt Enable)

An error interrupt request is generated when the EPIE bit and the CFDC0ERFL.EPF are both 1.

The EPIE bit cannot be set in CH_SLEEP mode. Only write to this bit when the related CANFD channel is in CH_RESET mode.

BOEIE bit (Bus-Off Entry Interrupt Enable)

When the BOEIE and the CFDC0ERFL.BOEF bits are both 1, an error interrupt request is generated.

The BOEIE bit cannot be set in CH_SLEEP mode. Only write to this bit when the related CANFD channel is in CH_RESET mode.

BORIE bit (Bus-Off Recovery Interrupt Enable)

When the BORIE and the CFDC0ERFL.BORF bits are both 1, an error interrupt request is generated.

The BORIE bit cannot be set in CH_SLEEP mode. Only write to this bit when the related CANFD channel is in CH_RESET mode.

OLIE bit (Overload Interrupt Enable)

When the OLIE and the CFDC0ERFL.OVLF bits are both 1, an error interrupt request is generated.

Do not write to this bit in CH_SLEEP mode. Only write to this bit when the related CANFD channel is in CH_RESET mode.

BLIE bit (Bus Lock Interrupt Enable)

When the BLIE and the CFDC0ERFL.BLF bits are both 1, an error interrupt request is generated.

Do not write to this bit in CH_SLEEP mode. Only write to this bit when the related CANFD channel is in CH_RESET mode.

ALIE bit (Arbitration Lost Interrupt Enable)

When the ALIE and the CFDC0ERFL.ALF bits are both 1, an error interrupt request is generated.

Do not write to this bit in CH_SLEEP mode. Only write to this bit when the related CANFD channel is in CH_RESET mode.

TAIE bit (Transmission Abort Interrupt Enable)

When the TAIE bit is 1 and a transmission is successfully aborted from a TX MB belonging to the corresponding CAN channel, an interrupt request is generated.

Do not write to this bit in CH_SLEEP mode. Only write to this bit when the related CANFD channel is in CH_RESET mode.

EOCOIE bit (Error Occurrence Counter Overflow Interrupt Enable)

When the EOCOIE bit is 1 and the CFDC0FDSTS.EOCO bit belonging to the corresponding CAN channel is 1, an error interrupt request is generated.

The EOCOIE bit cannot be set in CH_SLEEP mode. Only write to this bit when the related CANFD channel is in CH_RESET mode.

SOCOIE bit (Successful Occurrence Counter Overflow Interrupt Enable)

When the SOCOIE bit is 1 and the CFDC0FDSTS.SOCO bit belonging to the corresponding CAN channel is 1, an error interrupt request is generated.

The SOCOIE bit cannot be set in CH_SLEEP mode. Only write to this bit when the related CANFD channel is in CH_RESET mode.

TDCVFIE bit (Transceiver Delay Compensation Violation Interrupt Enable)

When the TDCVFIE bit is 1 and the CFDC0FDSTS.TDCVF bit belonging to the corresponding CAN channel is 1, an error interrupt request is generated.

The TDCVFIE bit cannot be set in CH_SLEEP mode.

Only write to this bit when the related CANFD channel is in CH_RESET mode. Do not set this bit when in Classical CAN mode.

Note: This bit is not available in the classical CAN function.

BOM[1:0] bits (Channel Bus-Off Mode)

The BOM[1:0]bits control the timing of the recovery from Bus-Off mode of the CANFD Channel.

Do not write to these bits in CH_SLEEP mode. Only write to these bits when the related CANFD channel is in CH_RESET mode.

Only write to these bits when the related CANFD channel is in CH_RESET mode.

ERRD bit (Channel Error Display)

The ERRD bit controls the display mode of the error flag bits [14:8] in the Channel Error Flag Register (CFDC0ERFL).

If the ERRD bit is 0 and more than one error occur at the same time, the error flag bits are set for all the errors that occurred at the same time. No further errors are flagged until CFDC0ERFL[14:8] is cleared.

Do not write to the ERRD bit in CH_SLEEP mode. Only write to this bit when the related CANFD channel is in CH_RESET or CH_HALT mode.

CTME bit (Channel Test Mode Enable)

The CTME bit enables the channel test modes.

Do not write to this bit in CH_SLEEP mode. Only write to this bit when the related CANFD channel is in CH_HALT mode.

CTMS[1:0] bits (Channel Test Mode Select)

The CTMS[1:0] bits are used to select the required test mode.

Do not write to these bits in CH_SLEEP or CH_RESET mode. Only write to these bits when the related CANFD channel is in CH_HALT mode.

These bits are cleared automatically when the related CANFD channel is in CH_RESET mode.

BFT bit (Bit Flip Test)

The BFT bit checks the internal CRC generator logic of the protocol controller.

It inverts the first bit (ID bit) of the CAN message data stream being received, so that the internal generated CRC result will not match the received CRC value of the frame. Refer to the bit stuffing rule, when using this feature, as there is the possibility of receiving a stuff error (due to the inversion) rather than a CRC error.

The internal generated CRC value is always observed in the following registers:

- CFDC0ERFL.CRCREG (Classical CAN frames)
- CFDC0FDCRC.CRCREG (CANFD frames).*1

Note 1. This feature is not available in the classical CAN function.

Some restriction exist when using this bit:

Other CAN node will send a reference message and the receiver node(s) can invert one bit of incoming bit stream.

Note: The transmitter and receiver modes share the same CRC generator, therefore it is not necessary to consider the modes separately when testing.

The Bit Flip test mode is enabled if the BFT (new control signal that inverts the first bit of the bit stream) and CTME bits are both 1 and CFDC0CTR.CTMS is 0x00.

If this function is used by a transmitting node, a bit error or an arbitration lost will occur.

Do not write to the BFT bit in CH_SLEEP mode. Users should not use this function when the Self test mode 1 (Internal Loop back mode). Only write to this bit when the related CANFD channel is in CH_HALT mode.

This bit is cleared automatically when the related CANFD channel is in CH_RESET mode.

ROM bit (Restricted Operation Mode)

When the ROM and CTME bits are both 1, the restricted operation mode is enabled. This mode should only be used in basic test mode (CFDC0CTR.CTMS[1:0] = 00b).

The ROM bit cannot be set in CH_SLEEP mode. Only write to this bit when the related CANFD channel is in CH_HALT mode.

This bit is cleared automatically when the related CANFD channel is in CH_RESET mode. Do not set this bit when in Classical CAN mode.

Note: This bit is not available in the classical CAN function.

29.2.4 CFDC0STS : Status Register

Base address: CANFD = 0x400B_0000

Offset address: 0x0008

Bit position:	31	30	29	28	27	26	25	24	23	22	21	20	19	18	17	16
Bit field:	TEC[7:0]								REC[7:0]							
Value after reset:	0	0	0	0	0	0	0	0	0	0	0	0	0	0	0	0

Bit position:	15	14	13	12	11	10	9	8	7	6	5	4	3	2	1	0
Bit field:	—	—	—	—	—	—	—	ESIF	COMSTS	RECSTS	TRMSTS	BOSTS	EPSTS	CSLPSTS	CHLTSTS	CRSTSTS
Value after reset:	0	0	0	0	0	0	0	0	0	0	0	0	0	1	0	1

Bit	Symbol	Function	R/W
0	CRSTSTS	Channel Reset Status 0: Channel not in Reset mode 1: Channel in Reset mode	R
1	CHLTSTS	Channel Halt Status 0: Channel not in Halt mode 1: Channel in Halt mode	R
2	CSLPSTS	Channel Sleep Status 0: Channel not in Sleep mode 1: Channel in Sleep mode	R
3	EPSTS	Channel Error Passive Status 0: Channel not in error passive state 1: Channel in error passive state	R
4	BOSTS	Channel Bus-Off Status 0: Channel not in bus-off state 1: Channel in bus-off state	R
5	TRMSTS	Channel Transmit Status 0: Channel is not transmitting 1: Channel is transmitting	R
6	RECSTS	Channel Receive Status 0: Channel is not receiving 1: Channel is receiving	R
7	COMSTS	Channel Communication Status 0: Channel is not ready for communication 1: Channel is ready for communication	R
8	ESIF*1	Error State Indication Flag 0: No CANFD message has been received when the ESI flag was set 1: At least one CANFD message was received when the ESI flag was set	R/W
15:9	—	These bits are read as 0. The write value should be 0.	R/W
23:16	REC[7:0]	Reception Error Count These bits increment or decrement the counter value according to error status of the CAN channel during reception.	R
31:24	TEC[7:0]	Transmission Error Count These bits increment or decrement the counter value according to error status of the CAN channel during transmission.	R

Note 1. This bit is not available in the classical CAN function.

Channel Status Register shows the mode, error and transmission or reception status of the related channel together with its reception and transmission error count values.

CRSTSTS bit (Channel Reset Status)

The CRSTSTS bit indicates whether the related CAN channel is in Reset mode.

This bit is set automatically when the related CAN channel enters Channel Reset mode. When the mode is changed from Reset mode to Sleep mode, the CRSTSTS bit remains 1.

This bit is cleared automatically when the related CAN channel exits the Channel Reset mode, except when changing to Sleep mode.

CHLTSTS bit (Channel Halt Status)

The CHLTSTS bit indicates whether the related CAN channel is in Halt mode.

This bit is set automatically when the related CAN module enters Halt mode, and is cleared automatically when the related CAN module exits Halt mode.

CSLPSTS bit (Channel Sleep Status)

The CSLPSTS bit indicates whether the related CAN channel is in Sleep mode.

This bit is set automatically when the related CANFD channel enters Sleep mode, and is cleared automatically when the related CANFD channel exits Sleep mode.

EPSTS bit (Channel Error Passive Status)

The EPSTS bit indicates whether the related CANFD channel has entered the error passive state.

This bit is set automatically when the value of the CAN Transmission or Reception Counter Register exceeds the value of 0x7F.

This bit is cleared automatically when the related CANFD channel exits the error passive state or enters Reset mode.

BOSTS bit (Channel Bus-Off Status)

The BOSTS bit indicates whether the related CANFD channel has entered the error bus-off state.

This bit is set automatically when the value of the related CAN Transmission Error Count Register exceeds 0xFF and the related CANFD channel is in the bus-off state (CAN Transmission Error Count Register > 0xFF).

This bit is cleared automatically when the related CANFD channel exits bus-off state.

TRMSTS bit (Channel Transmit Status)

The TRMSTS bit indicates whether the related CANFD channel is transmitting a message.

This bit is set automatically when the related CANFD channel is operating as a transmitter node or is in the bus-off state.

This bit is cleared automatically when the related CANFD channel is in the bus-idle state or starts operating as a receiver node.

RECSTS bit (Channel Receive Status)

The RECSTS bit indicates whether the related CANFD channel is receiving a message.

This bit is set automatically when the related CANFD channel is operating as a receiver node.

This bit is cleared automatically when the related CANFD channel is in the bus-idle state or starts operating as a transmitter node.

COMSTS bit (Channel Communication Status)

The COMSTS bit indicates whether the related CANFD channel is ready for communication.

This bit is set automatically when the related CANFD channel is ready to perform communication following the detection of 11 consecutive recessive bits after exiting the Reset or Halt mode.

This bit is cleared automatically when the related CANFD channel is in CH_RESET or CD_HALT mode.

Note: This bit is 1 during bus-off state.

ESIF bit (Error State Indication Flag)

The ESIF bit is set when the ESI bit is sampled recessively for a reception CAN message without any error. When in Loopback or Mirror mode, the self-transmitted messages are considered reception messages.

If a set from the CANFD channel occurs simultaneously with a clear by a write access, then the bit is set.

This bit is cleared by writing 0 to it. This bit is cleared automatically when the related CANFD channel is in CH_RESET mode.

Only write to this bit when the related CANFD channel is in CH_HALT or CH_OPERATION mode.

Do not use the bit clear instruction to clear this bit. Use the MOV instruction to ensure that only the specified bit is cleared. Other bits remain 1.

Note: This bit is not available in the classical CAN function.

REC[7:0] bits (Reception Error Count)

The REC[7:0] bits increment or decrement the counter value according to error status of the CANFD channel during reception, and display the value of the REC error counter.

The value in bus-off state is indeterminate.

These bits are cleared automatically when the CANFD module enters GL_RESET or the CANFD channel is in CH_RESET mode.

TEC[7:0] bits (Transmission Error Count)

The TEC[7:0] bits increment or decrement the counter value according to error status of the CANFD channel during transmission, and display the value of the TEC error counter.

Only write to these bits when in test mode and CANFD channel is in CH_HALT mode.

These bits are cleared automatically when CANFD module is in GL_RESET or CANFD channel is in CH_RESET mode.

29.2.5 CFDC0ERFL : Error Flag Register

Base address: CANFD = 0x400B_0000

Offset address: 0x000C

Bit position:	31	30	29	28	27	26	25	24	23	22	21	20	19	18	17	16
Bit field:	—	CRCREG[14:0]														
Value after reset:	0	0	0	0	0	0	0	0	0	0	0	0	0	0	0	0

Bit position:	15	14	13	12	11	10	9	8	7	6	5	4	3	2	1	0
Bit field:	—	ADERR	B0ERR	B1ERR	CERR	AERR	FERR	SERR	ALF	BLF	OVLF	BORF	BOEF	EPF	EWF	BEF
Value after reset:	0	0	0	0	0	0	0	0	0	0	0	0	0	0	0	0

Bit	Symbol	Function	R/W
0	BEF	Bus Error Flag 0: Channel bus error not detected 1: Channel bus error detected	R/W
1	EWF	Error Warning Flag 0: Channel error warning not detected 1: Channel error warning detected	R/W
2	EPF	Error Passive Flag 0: Channel error passive not detected 1: Channel error passive detected	R/W
3	BOEF	Bus-Off Entry Flag 0: Channel bus-off entry not detected 1: Channel bus-off entry detected	R/W
4	BORF	Bus-Off Recovery Flag 0: Channel bus-off recovery not detected 1: Channel bus-off recovery detected	R/W
5	OVLF	Overload Flag 0: Channel overload not detected 1: Channel overload detected	R/W
6	BLF	Bus Lock Flag 0: Channel bus lock not detected 1: Channel bus lock detected	R/W
7	ALF	Arbitration Lost Flag 0: Channel arbitration lost not detected 1: Channel arbitration lost detected	R/W
8	SERR	Stuff Error 0: Channel stuff error not detected 1: Channel stuff error detected	R/W
9	FERR	Form Error 0: Channel form error not detected 1: Channel form error detected	R/W
10	AERR	Acknowledge Error 0: Channel acknowledge error not detected 1: Channel acknowledge error detected	R/W

Bit	Symbol	Function	R/W
11	CERR	CRC Error 0: Channel CRC error not detected 1: Channel CRC error detected	R/W
12	B1ERR	Bit 1 Error 0: Channel bit 1 error not detected 1: Channel bit 1 error detected	R/W
13	B0ERR	Bit 0 Error 0: Channel bit 0 error not detected 1: Channel bit 0 error detected	R/W
14	ADERR	Acknowledge Delimiter Error 0: Channel acknowledge delimiter error not detected 1: Channel acknowledge delimiter error detected	R/W
15	—	This bit is read as 0. The write value should be 0.	R/W
30:16	CRCREG[14:0]	CRC Register value These bits show the CRC value calculated for the CAN2.0 CAN frame.	R
31	—	This bit is read as 0. The write value should be 0.	R/W

Channel Error Flag register shows the status of various error conditions detectable regardless of the setting of the related CAN Channel Error Interrupt Enable Register. It also shows the status of the various bus errors detectable by the CAN channel. Refer to the CAN specification (ISO 11898-1) to check when each error condition occurs.

For this register, only a single bit can be cleared by software. Do not use the bit clear instruction to clear the bit. Use the MOV instruction to ensure that only the specified bit is cleared. Other bits remain 1.

Example in assembler language to clear the CFDC0ERFL.BEF bit:

mov.b #0x0FE, CFDC0ERFL ;

BEF bit (Bus Error Flag)

The BEF bit indicates a detection of a CAN channel bus error state, flagged by bits [14:8] in this register.

This bit is cleared by writing 0 to it, and can only be set by CANFD module logic. Writing 1 has no effect.

This bit is set automatically when a bus error is detected, and is cleared automatically when the related CANFD channel is in CH_RESET mode.

If a set from the CAN channel occurs simultaneously with a clear by a write access, then the bit is set.

Only write to this bit when the related CANFD channel is in CH_HALT or CH_OPERATION mode.

EWF bit (Error Warning Flag)

The EWF bit indicates whether an error warning condition has been detected for the CAN channel.

This bit is cleared by writing 0 to it, and can only be set by CANFD module logic. Writing 1 has no effect.

This bit is set automatically when either TEC or REC exceeds 0x5F.

The setting of this bit only occurs when the TEC or REC initially exceeds 0x5F. Therefore, if the TEC or REC remains > 0x5F and the EWF bit is cleared by software, it is not set again until both the TEC and REC go below 0x60 and either TEC or REC crosses over again from a value 0x5F to a value > 0x5F.

If a set condition occurs simultaneously with a clear condition, then the bit is set. It is cleared automatically when the related CANFD channel is in CH_RESET mode.

Only write to this bit when the related CANFD channel is in CH_HALT or CH_OPERATION mode.

EPF bit (Error Passive Flag)

The EPF bit indicates a detection of a CAN channel error passive state.

This bit is cleared by writing 0 to it, and can only be set by CANFD module logic. Writing 1 has no effect.

This bit is set automatically when the CAN error state becomes error passive state.

The setting of this bit only occurs when the TEC or REC initially exceeds 0x7F. Therefore, if the TEC or REC remains > 0x7F and the bit is cleared by software, it is not set again until both the TEC and REC go below 0x80 and either TEC or REC crosses over again from a value ≤ 0x7F to a value > 0x7F.

If a set condition occurs simultaneously with a clear condition, then the bit is set. It is cleared automatically when the related CANFD channel is in CH_RESET mode.

Only write to this bit when the related CANFD channel is in CH_HALT or CH_OPERATION mode.

BOEF bit (Bus-Off Entry Flag)

The BOEF bit indicates a detection of a CAN channel bus-off entry state.

This bit is cleared by writing 0 to it, and can only be set by CANFD module logic. Writing 1 has no effect.

This bit is set automatically when the CAN error state enters the bus-off state.

This bit is cleared automatically when the related CANFD channel is in CH_RESET mode. If a set condition occurs simultaneously with a clear condition, then the bit is set.

Only write to this bit when the related CANFD channel is in CH_HALT or CH_OPERATION mode.

BORF bit (Bus-Off Recovery Flag)

The BORF bit indicates a detection of a CAN channel bus-off recovery state.

This bit is cleared by writing 0 to it, and can only be set by CANFD module logic. Writing 1 has no effect.

This bit is set automatically if CAN channel recovers from bus-off state in the following conditions:

- When CFDC0CTR.BOM is 00b and normal recovery (11 consecutive recessive bits x 128 times detected) occurs
- When CFDC0CTR.BOM is 10b and normal recovery (11 consecutive recessive bits x 128 times detected) occurs
- When CFDC0CTR.BOM is 11b and normal recovery (11 consecutive recessive bits x 128 times detected) occurs.

The bit is not set if CAN channel recovers from bus-off state in the following conditions:

- When CAN Reset mode is requested
- When CFDC0CTR.RTBO is set to 1 (the CAN channel returns to error active)
- When CFDC0CTR.BOM is 01b
- When CFDC0CTR.BOM is 11b and a halt request is asserted before the CAN channel reaches the end of the bus-off state.

This bit is cleared automatically when the related CANFD channel is in CH_RESET mode. If a set condition occurs simultaneously with a clear condition, the flag is set.

Only write to this bit when the related CANFD channel is in CH_HALT or CH_OPERATION mode.

OVLF bit (Overload Flag)

The OVLF flag indicates a detection of a CAN channel overload state.

The OVLF bit is cleared by writing 0 to it, and can only be set by CANFD module logic. Writing 1 has no effect.

This bit is set automatically when an overload condition is detected. If a set condition occurs simultaneously with a clear condition, then the bit is set.

This bit is cleared automatically when the related CANFD channel is in CH_RESET mode.

Only write to this bit when the related CANFD channel is in CH_HALT or CH_OPERATION mode.

BLF bit (Bus Lock Flag)

The BLF bit indicates a detection of a CAN channel bus lock condition.

This bit is cleared by writing 0 to it, and can only be set by CANFD module logic. Writing 1 has no effect.

This bit is set automatically when 32 consecutive dominant bits are detected on the CAN bus while the CAN channel is in Operation mode.

If a set condition occurs simultaneously with a clear condition, then the bit is set. It is cleared automatically when the related CANFD channel is in CH_RESET mode.

Only write to this bit when the related CANFD channel is in CH_HALT or CH_OPERATION mode.

It is cleared automatically when the related CANFD channel is in CH_RESET mode.

ALF bit (Arbitration Lost Flag)

The ALF bit indicates a detection of a CAN channel bus arbitration lost condition.

This bit is cleared by writing 0 to it, and can only be set by CANFD module logic. Writing 1 has no effect.

The bit is set automatically when an arbitration lost condition is detected on the CAN bus while the CAN channel is in Operation mode.

If a set condition occurs simultaneously with a clear condition, then the bit is set. It is cleared automatically when the related CANFD channel is in CH_RESET mode.

Only write to this bit when the related CANFD channel is in CH_HALT or CH_OPERATION mode.

SERR bit (Stuff Error)

The SERR bit indicates a detection of a CAN stuff error.

This bit is cleared by writing 0 to it, and can only be set by CANFD module logic. Writing 1 has no effect.

To clear this bit, use the following sequence:

1. Clear the corresponding flag bit.
2. Read if the flag bit is cleared.
3. If yes, continue, else go back to step 1.

This bit is set automatically when a stuff error is detected. If CFDC0CTR.ERRD bit is 1 and if the set and clear conditions occur at the same time for this bit, then this bit is set.

This bit is cleared automatically when the related CANFD channel is in CH_RESET mode. If CFDC0CTR.ERRD bit is 0 and the set and clear conditions occur at the same time for this bit, then it is cleared if a bit at CFDC0ERFL[14:8] is already set. Otherwise, this bit is set if CFDC0ERFL[14:8] is 0000000b.

Only write to this bit when the related CANFD channel is in CH_HALT or CH_OPERATION mode.

FERR bit (Form Error)

The FERR bit indicates a detection of a CAN form error.

This bit is cleared by writing 0 to it, and can only be set by CANFD module logic. Writing 1 has no effect.

To clear this bit, use the following sequence:

1. Clear the corresponding flag bit.
2. Read if the flag bit is cleared.
3. If yes, continue, else go back to step 1.

This bit is set automatically when a form error is detected. If CFDC0CTR.ERRD bit is 1 and if the set and clear conditions occur at the same time for this bit, then this bit is set.

This bit is cleared automatically when the related CANFD channel is in CH_RESET mode. If CFDC0CTR.ERRD bit is 0 and the set and clear conditions occur at the same time for this bit, then it is cleared if a bit at CFDC0ERFL[14:8] is already set. Otherwise, this bit is set if CFDC0ERFL[14:8] is 0000000b.

Only write to this bit when the related CANFD channel is in CH_HALT or CH_OPERATION mode.

AERR bit (Acknowledge Error)

The AERR bit indicates a detection of a CAN acknowledge error.

This bit is cleared by writing 0 to it, and can only be set by CANFD module logic. Writing 1 has no effect.

To clear this bit, use the following sequence:

1. Clear the corresponding flag bit.
2. Read if the flag bit is cleared.
3. If yes, continue, else go back to step 1.

This bit is set automatically when an acknowledge error is detected. If CFDC0CTR.ERRD bit is 1 and if the set and clear conditions occur at the same time for this bit, then this bit is set.

This bit is cleared automatically when the related CANFD channel is in CH_RESET mode. If CFDC0CTR.ERRD bit is 0 and the set and clear conditions occur at the same time for this bit, then it is cleared if a bit at CFDC0ERFL[14:8] is already set. Otherwise, this bit is set if CFDC0ERFL[14:8] is 0000000b.

Only write to this bit when the related CANFD channel is in CH_HALT or CH_OPERATION.

CERR bit (CRC Error)

The CERR bit indicates a detection of a CAN CRC error.

This bit is cleared by writing 0 to it, and can only be set by CANFD module logic. Writing 1 has no effect.

To clear this bit, use the following sequence:

1. Clear the corresponding flag bit.
2. Read if the flag bit is cleared.
3. If yes, continue, else go back to step 1.

This bit is set automatically when a CRC error is detected. If CFDC0CTR.ERRD bit is 1 and if the set and clear conditions occur at the same time for this bit, then this bit is set.

This bit is cleared automatically when the related CANFD channel is in CH_RESET mode. If CFDC0CTR.ERRD bit is 0 and the set and clear conditions occur at the same time for this bit, then it is cleared if a bit at CFDC0ERFL[14:8] is already set. Otherwise, this bit is set if CFDC0ERFL[14:8] is 0000000b.

Only write to this bit when the related CANFD channel is in CH_HALT or CH_OPERATION mode.

B1ERR bit (Bit 1 Error)

The B1ERR bit indicates a detection of a recessive bit error.

This bit is cleared by writing 0 to it, and can only be set by CANFD module logic. Writing 1 has no effect.

To clear this bit, use the following sequence:

1. Clear the corresponding flag bit.
2. Read if the flag bit is cleared.
3. If yes, continue, else go back to step 1.

This bit is set automatically when a recessive bit error (expected recessive bit, sampled as dominant bit) is detected. If CFDC0CTR.ERRD bit is 1 and if the set and clear conditions occur at the same time for this bit, then this bit is set.

This bit is cleared automatically when the related CANFD channel is in CH_RESET mode. If CFDC0CTR.ERRD bit is 0 and the set and clear conditions occur at the same time for this bit, then it is cleared if a bit at CFDC0ERFL[14:8] is already set. Otherwise, this bit is set if CFDC0ERFL[14:8] is 0000000b.

Only write to this bit when the related CANFD channel is in CH_HALT or CH_OPERATION mode.

B0ERR bit (Bit 0 Error)

The B0ERR bit indicates a detection of a dominant bit error.

This bit is cleared by writing 0 to it, and can only be set by CANFD module logic. Writing 1 has no effect.

To clear this bit, use the following sequence:

1. Clear the corresponding flag bit.
2. Read if the flag bit is cleared.
3. If yes, continue, else go back to step 1.

This bit is set automatically when a dominant bit error (expected dominant bit, sampled as recessive bit) is detected. If CFDC0CTR.ERRD bit is 1 and if the set and clear conditions occur at the same time for this bit, then this bit is set.

This bit is cleared automatically when the related CANFD channel is in CH_RESET mode. If CFDC0CTR.ERRD bit is 0 and the set and clear conditions occur at the same time for this bit, then it is cleared if a bit at CFDC0ERFL[14:8] is already set. Otherwise, this bit is set if CFDC0ERFL[14:8] is 0000000b.

Only write to this bit when the related CANFD channel is in CH_HALT or CH_OPERATION mode.

ADERR bit (Acknowledge Delimiter Error)

The ADERR bit indicates a detection of an acknowledge delimiter bit error.

This bit is cleared by writing 0 to it, and can only be set by CANFD module logic. Writing 1 has no effect.

To clear this bit, use the following sequence:

1. Clear the corresponding flag bit.
2. Read if the flag bit is cleared.
3. If yes, continue, else go back to step 1.

This bit is set automatically when a form error is detected during the acknowledge delimiter state of frame transmission. If CFDC0CTR.ERRD bit is 1 and if the set and clear conditions occur at the same time for this bit, then this bit is set.

This bit is cleared automatically when the related CANFD channel is in CH_RESET mode. If CFDC0CTR.ERRD bit is 0 and the set and clear conditions occur at the same time for this bit, then it is cleared if a bit at CFDC0ERFL[14:8] is already set. Otherwise, this bit is set if CFDC0ERFL[14:8] is 0000000b.

Only write to this bit when the related CANFD channel is in CH_HALT or CH_OPERATION mode.

CRCREG[14:0] bits (CRC Register value)

The CRCREG[14:0] bits read the calculated CRC value when CFDC0CTR.CTME bit is 1 for the channel.

If CFDC0CTR.CTME bit is 0, then these bits are always read as 0.

These bits show the CAN2.0 CRC value calculated by the CANFD channel logic when the CTME bit is enabled.

The CFDC0ERFL.CRCREG value is updated in the first bit of the CRC field of the CAN frame (reception and transmission).

These bits are cleared automatically when the related CANFD channel is in CH_RESET mode.

29.2.6 CFDC0DCFG : Data Baud Rate Configuration Register

This register is not available in the classical CAN function.

Base address: CANFD = 0x400B_0000

Offset address: 0x0100

Bit position:	31				27			24				19				16				12				8	7							0
Bit field:	—	—	—	—	DSJW[3:0]				—	—	—	—	DTSEG2[3:0]				—	—	—	DTSEG1[4:0]					DBRP[7:0]							
Value after reset:	0	0	0	0	0	0	0	0	0	0	0	0	0	0	0	0	0	0	0	0	0	0	0	0	0	0	0	0	0	0	0	0

Bit	Symbol	Function	R/W
7:0	DBRP[7:0]	Channel Data Baud Rate Prescaler Data Baud Rate Prescaler division ratio	R/W
12:8	DTSEG1[4:0]	Timing Segment 1 0x00: Reserved 0x01: 2 Tq 0x02: 3 Tq 0x03: 4 Tq ⋮ 0x1E: 31 Tq 0x1F: 32 Tq	R/W
15:13	—	These bits are read as 0. The write value should be 0.	R/W

Bit	Symbol	Function	R/W
19:16	DTSEG2[3:0]	Timing Segment 2 0x0: Reserved 0x1: 2 Tq ⋮ 0xE: 15 Tq 0xF: 16 Tq	R/W
23:20	—	These bits are read as 0. The write value should be 0.	R/W
27:24	DSJW[3:0]	Resynchronization Jump Width 0x0: 1 Tq 0x1: 2 Tq ⋮ 0xF: 16 Tq	R/W
31:28	—	These bits are read as 0. The write value should be 0.	R/W

Note: Tq means time quantum.

The Data Baud Rate Configuration Register configures the transmission/reception data baud rate parameters of the channels.

The channel of Classical CAN mode does not perform configuration of this register.

DBRP[7:0] bits (Channel Data Baud Rate Prescaler)

The DBRP[7:0] bits define the peripheral bus clock periods contained in a time quantum.

Do not write to these bits in CH_OPERATION or CH_SLEEP mode.

Only write to these bits when the related CANFD channel is in CH_RESET or CH_HALT mode.

DTSEG1[4:0] bits (Timing Segment 1)

The DTSEG1[4:0] bits set the segment TSEG1 to compensate for edges on the CAN bus with a positive phase error. A value from 2 to 32 time quanta can be set.

The DTSEG1[4:0] bits are also used to set the propagation segment.

Do not write to these bits in CH_OPERATION or CH_SLEEP mode.

Only write to these bits when the related CANFD channel is in CH_RESET or CH_HALT mode. Do not write any other value to these bits. See section 29.4.1.2. CAN Bit Timing for more details.

DTSEG2[3:0] bits (Timing Segment 2)

The DTSEG2[3:0] bits set the segment TSEG2 to compensate for edges on the CAN bus with a negative phase error. A value from 2 to 16 time quanta can be set.

Do not write to these bits in CH_OPERATION or CH_SLEEP mode.

Only write to these bits when the related CANFD channel is in CH_RESET or CH_HALT mode. Do not write any other value to these bits.

DSJW[3:0] bits (Resynchronization Jump Width)

The DSJW[3:0] bits set the synchronization jump width. A value from 1 to 16 time quanta can be set.

Do not write to these bits in CH_OPERATION or CH_SLEEP mode.

Only write to these bits when the related CANFD channel is in CH_RESET or CH_HALT mode.

29.2.7 CFDC0FDCFG : CANFD Configuration Register

Base address: CANFD = 0x400B_0000

Offset address: 0x0104

Bit position:	31	30	29	28	27	26	25	24	23	22	21	20	19	18	17	16
Bit field:	—	CLOE	REFE	FDOE	—	—	—	—	TDCO[7:0]							
Value after reset:	0	0	0	0	0	0	0	0	0	0	0	0	0	0	0	0

Bit position:	15	14	13	12	11	10	9	8	7	6	5	4	3	2	1	0
Bit field:	—	—	—	—	—	ESIC	TDCE	TDCOC	—	—	—	—	—	EOCCFG[2:0]		
Value after reset:	0	0	0	0	0	0	0	0	0	0	0	0	0	0	0	0

Bit	Symbol	Function	R/W
2:0	EOCCFG[2:0]	Error Occurrence Counter Configuration 0 0 0: All transmitter or receiver CAN frames 0 0 1: All transmitter CAN frames 0 1 0: All receiver CAN frames 0 1 1: Reserved 1 0 0: Only transmitter or receiver CANFD data-phase (fast bits) 1 0 1: Only transmitter CANFD data-phase (fast bits) 1 1 0: Only receiver CANFD data-phase (fast bits) 1 1 1: Reserved	R/W
7:3	—	These bits are read as 0. The write value should be 0.	R/W
8	TDCOC*1	Transceiver Delay Compensation Offset Configuration 0: Measured + offset 1: Offset-only	R/W
9	TDCE*1	Transceiver Delay Compensation Enable 0: Transceiver delay compensation disabled 1: Transceiver delay compensation enabled	R/W
10	ESIC*1	Error State Indication Configuration 0: The ESI bit in the frame represents the error state of the node itself 1: The ESI bit in the frame represents the error state of the message buffer if the node itself is not in error passive. If the node is in error passive, then the ESI bit is driven by the node itself.	R/W
11	—	This bit is read as 0. The write value should be 0.	R/W
15:12	—	These bits are read as 0. The write value should be 0.	R/W
23:16	TDCO[7:0]*1	Transceiver Delay Compensation Offset	R/W
27:24	—	These bits are read as 0. The write value should be 0.	R/W
28	FDOE*1	FD-Only Enable 0: FD-only mode disabled 1: FD-only mode enabled	R/W
29	REFE	RX Edge Filter Enable 0: RX edge filter disabled 1: RX edge filter enabled	R/W
30	CLOE*1	Classical CAN Enable 0: Classical CAN mode disabled 1: Classical CAN mode enabled	R/W
31	—	This bit is read as 0. The write value should be 0.	R/W

Note 1. These bits are not available in the classical CAN function.

The CANFD Configuration Register configures which communication direction (transmitter/receiver) errors are counted.

EOCCFG[2:0] bits (Error Occurrence Counter Configuration)

The EOCCFG[2:0] bits select which type of CAN frame configuration and direction, including protocol errors are counted.

Do not write to these bits in CH_OPERATION or CH_SLEEP mode.

Only write to these bits when the related CANFD channel is in CH_RESET or CH_HALT mode.

TDCOC bit (Transceiver Delay Compensation Offset Configuration)*1

The TDCOC bit selects which offset is used when defining the position of the secondary sample point (SSP) for the CANFD channel. If the bit is set to 0, the position of the SSP is the measured transceiver delay plus the fixed offset. If the bit is 1, the position of the SSP is defined only by the offset.

Do not write to this bit in CH_OPERATION or CH_SLEEP mode.

Only write to this bit when the related CANFD channel is in CH_RESET or CH_HALT mode. Do not set this bit when in Classical CAN mode.

TDCE bit (Transceiver Delay Compensation Enable)*1

The TDCE bit enables the transceiver delay compensation for the CANFD channel.

Do not write to this bit in CH_OPERATION or CH_SLEEP mode.

Only write to this bit when the related CANFD channel is in CH_RESET or CH_HALT mode. Do not set this bit when in Classical CAN mode.

ESIC bit (Error State Indication Configuration)*1

The ESIC bit controls the transmission of either the ESI flag information or the message of ESI flag information (CFDCFFDCSTS.CFESI or CFDTMFDCTRb.TMESI).

Do not write to this bit in CH_OPERATION or CH_SLEEP mode.

Only write to this bit when the related CANFD channel is in CH_RESET or CH_HALT mode. Do not set this bit when in Classical CAN mode.

TDCO[7:0] bits (Transceiver Delay Compensation Offset)*1

The TDCO[7:0] bits set the secondary sample point offset. How this value is used, depends on the CFDC0FDCFG.TDCOC setting.

If CFDC0FDCFG.TDCOC = 0, the transceiver delay compensation result is equal to the Trv_Delay (measured delay) + the value in CFDC0FDCFG.TDCO, rounded down to the nearest integer number of time quanta. Otherwise, the result is equal to the value in CFDC0FDCFG.TDCO. See section 29.4.1.5. Transmitter Delay Compensation for details on how CFDC0FDCFG.TDCO is used.

The actual offset value is interpreted as TDCO + 1. For example, if 4 is set in TDCO, the offset is 5 clock cycles. Clock cycle is 1 cycle of CAN channel DLL clock.

Do not write to the TDCO[7:0] bits in CH_OPERATION or CH_SLEEP mode.

Only write to these bits when the related CANFD channel is in CH_RESET or CH_HALT mode. Do not set this bit when in Classical CAN mode.

FDOE bit (FD-Only Enable)*1

The FDOE bit enables the reception and transmission of CANFD-only frames. If enabled, communication in Classical CAN frame format is disabled. Transmission of Classical CAN frames is not possible because the FDF bit of the message buffer is a don’t care (CFDCFFDCSTS.CFFDF/CFDTMFDCTRb.TMFDF).

If messages with Classical CAN frame format are received, the protocol controller treats them as invalid frames and response with error frames. When a Classical CAN frame is configured for transmitting, the FDF bit is sent as recessive, therefore an FD frame is sent. If the data length code (DLC) is configured of greater than 8 bytes, the remaining data bytes are padded with 0xCC.

The FDOE bit cannot be written in CH_OPERATION, CH_HALT or CH_SLEEP mode.

Do not set CFDC0FDCFG.FDOE and CFDC0FDCFG.CLOE simultaneously.

REFE bit (RX Edge Filter Enable)

The REFE bit enables the RX edge filter during the IDLE detection (bus integration). When the bit is enabled, two consecutive dominant time quanta are required to detect a synchronization edge.

The REFE bit cannot be written in CH_OPERATION, CH_HALT and CH_SLEEP mode. Do not set this bit when in Classical CAN mode.

CLOE bit (Classical CAN Enable)*1

The CLOE bit enables the Classical CAN mode. If this bit is 1, the protocol controller can only send classical frames and response with a form or CRC error on FD frames.

Do not set CFDC0FDCFG.CLOE and CFDC0FDCFG.FDOE simultaneously.

CFDC0FDCFG.CLOE	CFDC0FDCFG.FDOE	Channel mode
0	0	CANFD mode
0	1	FD-only mode
1	0	Classical CAN mode
1	1	Reserved

Do not write to this bit in CH_OPERATION, CH_HALT or CH_SLEEP mode.

Only write to these bits when the CANFD channel is in CH_RESET mode.

Note 1. These bits are not available in the classical CAN function.

29.2.8 CFDC0FDCTR : CANFD Control Register

Base address: CANFD = 0x400B_0000

Offset address: 0x0108

Bit position:	31	30	29	28	27	26	25	24	23	22	21	20	19	18	17	16
Bit field:	—	—	—	—	—	—	—	—	—	—	—	—	—	—	—	—
Value after reset:	0	0	0	0	0	0	0	0	0	0	0	0	0	0	0	0

Bit position:	15	14	13	12	11	10	9	8	7	6	5	4	3	2	1	0
Bit field:	—	—	—	—	—	—	—	—	—	—	—	—	—	—	SOCCLR	EOCCLR
Value after reset:	0	0	0	0	0	0	0	0	0	0	0	0	0	0	0	0

Bit	Symbol	Function	R/W
0	EOCCLR	Error Occurrence Counter Clear 0: No error occurrence counter clear 1: Clear error occurrence counter	R/W
1	SOCCLR	Successful Occurrence Counter Clear 0: No successful occurrence counter clear 1: Clear successful occurrence counter	R/W
31:2	—	These bits are read as 0. The write value should be 0.	R/W

The CANFD Control Register controls the error and successful occurrence counters.

EOCCLR bit (Error Occurrence Counter Clear)

The EOCCLR bit is used to clear the error occurrence counter.

Do not write to this bit in CH_SLEEP or CH_RESET mode. The read value is always 0.

This bit is cleared automatically by the CANFD module logic and when the related CANFD channel is in CH_RESET mode.

SOCCLR bit (Successful Occurrence Counter Clear)

The SOCCLR bit is used to clear the successful occurrence counter.

Do not write to this bit in CH_SLEEP or CH_RESET mode. The read value is always 0.

This bit is cleared automatically by the CANFD module logic and when the related CANFD channel is in CH_RESET mode.

29.2.9 CFDC0FDSTS : CANFD Status Register

Base address: CANFD = 0x400B_0000

Offset address: 0x010C

Bit position:	31	30	29	28	27	26	25	24	23	22	21	20	19	18	17	16
Bit field:	SOC[7:0]								EOC[7:0]							
Value after reset:	0	0	0	0	0	0	0	0	0	0	0	0	0	0	0	0

Bit position:	15	14	13	12	11	10	9	8	7	6	5	4	3	2	1	0
Bit field:	TDCVF	—	—	—	—	—	SOCO	EOCO	TDCR[7:0]							
Value after reset:	0	0	0	0	0	0	0	0	0	0	0	0	0	0	0	0

Bit	Symbol	Function	R/W
7:0	TDCR[7:0]*1	Transceiver Delay Compensation Result	R
8	EOCO	Error Occurrence Counter Overflow 0: Error occurrence counter has not overflowed 1: Error occurrence counter has overflowed	R/W
9	SOCO	Successful Occurrence Counter Overflow 0: Successful occurrence counter has not overflowed 1: Successful occurrence counter has overflowed	R/W
14:10	—	These bits are read as 0. The write value should be 0.	R/W
15	TDCVF*1	Transceiver Delay Compensation Violation Flag 0: Transceiver delay compensation violation has not occurred 1: Transceiver delay compensation violation has occurred	R/W
23:16	EOC[7:0]	Error Occurrence Counter These bits show the error occurrence counter value.	R
31:24	SOC[7:0]	Successful occurrence counter These bits show the successful occurrence counter value.	R

Note 1. These bits are not available in the classical CAN function.

The CANFD Status Register indicates the transceiver compensation delay result and its related FIFO message lost status.

TDCR[7:0] bits (Transceiver Delay Compensation Result)

The TDCR[7:0] bits are set when the transceiver delay has been measured.

The measured delay is a multiple of the CAN channel DLL clock. The result depends on the CFDC0FDCFG.TDCOC configuration and the offset value in CFDC0FDCFG.TDCO. See section 29.4.1.5. Transmitter Delay Compensation for details on how this value is derived.

The TDCR[7:0] bits are updated at the falling edge between FDF and the RES bit when CFDC0FDCFG.TDCOC = 0 and the transceiver delay compensation is enabled (CFDC0FDCFG.TDCE = 1).

These bits are cleared automatically when the related CANFD channel is in CH_RESET mode.

Note: These bits are not available in the classical CAN function.

EOCO bit (Error Occurrence Counter Overflow)

The EOCO bit indicates whether the related CAN channel error occurrence counter has overflowed. This bit is cleared by writing 0 to it. Writing 1 has no effect.

This bit is set automatically when CFDC0FDSTS.EOC is 0xFF and a CAN bus error is detected based on the configuration defined in CFDC0FDCFG.EOCCFG.

If the set from the CAN channel occurs simultaneously with the clear by the write access, then the bit is set.

This bit is cleared automatically when the related CANFD channel is in CH_RESET mode.

Only write to this bit when the related CANFD channel is in CH_HALT or CH_OPERATION mode.

Do not use the bit clear instruction to clear this bit. Use the MOV instruction to ensure that only the specified bit is cleared. Other bits remain 1.

SOCO bit (Successful Occurrence Counter Overflow)

The SOCO bit indicates whether the related CAN channel successful occurrence counter has overflowed. This bit is cleared by writing 0 to it. Writing 1 has no effect.

This bit is set automatically when CFDC0FDSTS.SOC is 0xFF and a successful message reception or successful message transmission occurs.

If the set from the CAN channel occurs simultaneously with the clear by the write access, then the bit is set.

This bit is cleared automatically when the related CANFD channel is in CH_RESET mode.

Write to this bit only when the related CANFD channel is in CH_HALT or CH_OPERATION mode.

Do not use the bit clear instruction to clear this bit. Use the MOV instruction to ensure that only the specified bit is cleared. Other bits remain 1.

TDCVF bit (Transceiver Delay Compensation Violation Flag)

The CANFD module captures internally the transmitted data bit-by-bit. This data is then compared against the received CAN bus level which is delayed by the transceiver loop delay.

The transceiver delay has some variations depending on the physical parameters such as temperature. The result bit CFDC0FDSTS.TDCR is updated by each message. However, temporary maximum delay violation could be missed. Therefore, the TDCVF bit captures this violation.

This bit is cleared by writing 0 to it. Writing 1 has no effect.

This bit is set automatically when the transceiver delay compensation is greater than the maximum delay compensation (6 data bit times - 2 clk_dlc) and the internal bit is overrun.

If the set from the CAN channel occurs simultaneously with the clear by the write access, then the bit is set.

This bit is cleared automatically when the related CANFD channel is in CH_RESET mode.

Only write to this bit when the related CANFD channel is in CH_HALT or CH_OPERATION mode.

Do not use the bit clear instruction to clear this bit. Use the MOV instruction to ensure that only the specified bit is cleared. Other bits remain 1.

Note: This bit is not available in the classical CAN function.

EOC[7:0] bits (Error Occurrence Counter)

The EOC[7:0] bits are used together with the SOC[7:0] bits to support an option for host-controlled fall-back to payload bit rate identical to arbitration bit rate when messages utilizing the reduced payload bit length have significant higher error rates compared to other messages.

This higher error rate can be detected depending on the configuration of the CFDC0FDCFG.EOCCFG bits.

The EOC[7:0] bits are set only by CANFD module logic. These bits are cleared by writing 1 to CFDC0FDCTR.EOCCLR. Writing any other value has no effect.

These bits are updated when an error occurs, according to the configuration of the CFDC0FDCFG.EOCCFG bits. When the counter reaches the value of 0xFF, the update stops.

These bits are cleared automatically when the related CANFD channel is in CH_RESET mode.

SOC[7:0] bits (Successful occurrence counter)

The SOC[7:0] bits are used together with the EOC[7:0] bits to support an option for host-controlled fall-back to payload bit rate identical to arbitration bit rate when messages utilizing the reduced payload bit length have significant higher error rates compared to other messages.

The SOC[7:0] bits are set only by CANFD module logic. Writing any other value has no effect.

These bits are updated when the occurrence of any error-free messages on the bus is detected through reception or transmission. When the counter reaches the value of 0xFF, the update stops.

Note: In Loopback mode, the counter is incremented twice.

These bits are cleared by writing 1 to CFDC0FDCTR.SOCCLR.

These bits are cleared automatically when the related CANFD channel is in CH_RESET mode.

29.2.10 CFDC0FDCRC : CANFD CRC Register

This register is not available in the classical CAN function.

Base address: CANFD = 0x400B_0000

Offset address: 0x0110

Bit position:	31				27			24				20																				0
Bit field:	—	—	—	—	SCNT[3:0]				—	—	—	CRCREG[20:0]																				
Value after reset:	0	0	0	0	0	0	0	0	0	0	0	0	0	0	0	0	0	0	0	0	0	0	0	0	0	0	0	0	0	0	0	0

Bit	Symbol	Function	R/W
20:0	CRCREG[20:0]	CRC Register value These bits show the CRC value calculated for the CANFD frame.	R
23:21	—	These bits are read as 0.	R
27:24	SCNT[3:0]	Stuff bit count These bits shows the stuff bit count (mod 8) for the CANFD frame.	R
31:28	—	These bits are read as 0.	R

The CANFD CRC Register holds the CRC value calculated for the CANFD frame.

CRCREG[20:0] bits (CRC Register value)

The CRCREG[20:0] bits contain the CRC value calculated by the CANFD channel logic when the CFDC0CTR.CTME bit is enabled.

The CFDC0FDCRC.CRCREG value is updated in the first bit of the CRC field of the CANFD frame (reception and transmission).

When the CFDC0CTR.CTME bit is 0, the CRCREG[20:0] bits are always read as 0.

When bit 17th of the CRC field is used, CRCREG[20:17] are always read as 0.

These bits are cleared automatically when the related CANFD channel is in CH_RESET mode.

SCNT[3:0] bits (Stuff bit count)

The SCNT[3:0] bits contain the stuff count value of the CANFD frame. These bits indicate the number of inserted stuff bits (modulo 8, Graycoded) for a CANFD frame when the CFDC0CTR.CTME bit is enabled in CFDC0FDCRC.SCNT[3:1]. SCNT[0] is the parity bit.

When the CFDC0CTR.CTME bit is 0, the SCNT[3:0] bits are always read as 0.

The SCNT value is updated in the first bit of CRC field of the CANFD frame (reception and transmission).

These bits are cleared automatically when the related CANFD channel is in CH_RESET mode.

29.2.11 CFDGCFG : Global Configuration Register

Base address: CANFD = 0x400B_0000

Offset address: 0x0014

Bit position:	31	30	29	28	27	26	25	24	23	22	21	20	19	18	17	16
Bit field:	ITRCP[15:0]															
Value after reset:	0	0	0	0	0	0	0	0	0	0	0	0	0	0	0	0

Bit position:	15	14	13	12	11	10	9	8	7	6	5	4	3	2	1	0
Bit field:	—	—	—	TSSS	TSP[3:0]				—	—	CMPOC	DCS	MME	DRE	DCE	TPRI
Value after reset:	0	0	0	0	0	0	0	0	0	0	0	0	0	0	0	0

Bit	Symbol	Function	R/W
0	TPRI	Transmission Priority 0: ID priority 1: Message buffer number priority	R/W
1	DCE	DLC Check Enable 0: DLC check disabled 1: DLC check enabled	R/W
2	DRE	DLC Replacement Enable 0: DLC replacement disabled 1: DLC replacement enabled	R/W
3	MME	Mirror Mode Enable 0: Mirror mode disabled 1: Mirror mode enabled	R/W
4	DCS	Data Link Controller Clock Select 0: CANFD core clock (CANFDCLK) 1: External oscillator clock (CANMCLK)	R/W
5	CMPOC[*1]	CANFD Message Payload Overflow Configuration 0: Message is rejected 1: Message payload is cut to fit to configured message size	R/W
7:6	—	These bits are read as 0. The write value should be 0.	R/W
11:8	TSP[3:0]	Timestamp Prescaler 0x0: Timestamp prescaler = 1 0x1: Timestamp prescaler = 2 0x2: Timestamp prescaler = 4 0x3: Timestamp prescaler = 8 ⋮ 0xD: Timestamp prescaler = 8192 0xE: Timestamp prescaler = 16384 0xF: Timestamp prescaler = 32768	R/W
12	TSSS	Timestamp Source Select 0: Source clock for timestamp counter is peripheral clock 1: Source clock for timestamp counter is bit time clock	R/W
15:13	—	These bits are read as 0. The write value should be 0.	R/W
31:16	ITRCP[15:0]	Interval Timer Reference Clock Prescaler FIFO interval timer prescaler value	R/W

Note 1. This bit is not available in the classical CAN function.

The Global Configuration Register is used to select the transmission priority to be used for all the TX message buffers and the clock source for the CAN protocol engine of CAN channel. The CFDGCFG register is also used to select the source for the timestamp clock and to configure the frequency for the timestamp clock and interval timer reference clock.

TPRI bit (Transmission Priority)

The TPRI bit selects the transmission priority for CAN channel.

Do not write to this bit in GL_SLEEP mode. Only write to this bit when CANFD module is in GL_RESET mode.

Message buffer number priority should not be used together with TX queue transmission.

DCE bit (DLC Check Enable)

The DCE bit enables data length code (DLC) check for CAN channel.

Do not write to this bit in GL_SLEEP mode. Only write to this bit when CANFD module is in GL_RESET mode.

DRE bit (DLC Replacement Enable)

When the DRE bit is 1 and the DCE is 1, the CANFD stores the configured value (CFDGAFLP0r.GAFLDLC) of the DLC in the destination RX message buffer or FIFO buffer if the DLC check passes. Otherwise, the DLC value in the destination RX message buffer or FIFO buffer is unchanged.

Do not write to this bit in GL_SLEEP mode. Only write to this bit when CANFD module is in GL_RESET mode.

MME bit (Mirror Mode Enable)

The MME bit enables the Mirror mode for CAN channel.

Do not write to this bit in GL_SLEEP mode. Only write to this bit when CANFD module is in GL_RESET mode.

DCS bit (Data Link Controller Clock Select)

The DCS bit selects CANFDCLK or CANMCLK as the clock source for CAN communication.

Do not write to this bit in GL_SLEEP or GL_OPERATION mode. Only write to this bit when CANFD module is in GL_RESET mode.

CMPOC bit (CANFD Message Payload Overflow Configuration)

The CMPOC bit controls the message payload acceptance mechanism when the received payload is higher than the message buffer payload size CFDRMNB.RMPLS, CFDRFCCa.RFPLS, and CFDCFCC.CFPLS. The received message payload is always compared with the available message payload size in the message buffer.

Do not write to this bit in GL_SLEEP or GL_OPERATION mode. Only write to this bit when CANFD module is in GL_RESET mode.

When this bit is set and payload overflow occurs, the DLC value is stored in the RX message buffer or FIFO buffer unchanged.

Note: This bit is not available in the classical CAN function.

TSP[3:0] bits (Timestamp Prescaler)

The value configured in the TSP[3:0] bits defines the period of the clock source used for the timestamp counter.

Do not write to this bit in GL_SLEEP mode. Only write to this bit when CANFD module is in GL_RESET mode.

TSSS bit (Timestamp Source Select)

The TSSS bit allows the selection of the clock source for the timestamp counter.

Do not write to this bit in GL_SLEEP mode. Only write to this bit when CANFD module is in GL_RESET mode. Additionally, do not set this bit to 1 when CANFD communication is used.[*1]

Note: The bit time clock varies depending on the nominal and data rate bit configuration.

Note 1. This feature is not available in the classical CAN function.

ITRCP[15:0] bits (Interval Timer Reference Clock Prescaler)

The ITRCP[15:0] bits allow the definition of a reference clock for the FIFO interval timer source clock.

When these bits are 0x0000, the timer is disabled.

Do not write to this bit in GL_SLEEP mode. Only write to this bit when CANFD module is in GL_RESET mode.

29.2.12 CFDGCTR : Global Control Register

Base address: CANFD = 0x400B_0000

Offset address: 0x0018

Bit position:	31	30	29	28	27	26	25	24	23	22	21	20	19	18	17	16
Bit field:	—	—	—	—	—	—	—	—	—	—	—	—	—	—	—	TSRST
Value after reset:	0	0	0	0	0	0	0	0	0	0	0	0	0	0	0	0

Bit position:	15	14	13	12	11	10	9	8	7	6	5	4	3	2	1	0
Bit field:	—	—	—	—	CMPOFIE	THLEIE	MEIE	DEIE	—	—	—	—	—	GSLPR	GMDC[1:0]	
Value after reset:	0	0	0	0	0	0	0	0	0	0	0	0	0	1	0	1

Bit	Symbol	Function	R/W
1:0	GMDC[1:0]	Global Mode Control 0 0: Global operation mode request 0 1: Global reset mode request 1 0: Global halt mode request 1 1: Keep current value	R/W
2	GSLPR	Global Sleep Request 0: Global sleep request disabled 1: Global sleep request enabled	R/W
7:3	—	These bits are read as 0. The write value should be 0.	R/W
8	DEIE	DLC Check Interrupt Enable 0: DLC check interrupt disabled 1: DLC check interrupt enabled	R/W
9	MEIE	Message Lost Error Interrupt Enable 0: Message lost error interrupt disabled 1: Message lost error interrupt enabled	R/W
10	THLEIE	TX History List Entry Lost Interrupt Enable 0: TX history list entry lost interrupt disabled 1: TX history list entry lost interrupt enabled	R/W
11	CMPOFIE*1	CANFD Message Payload Overflow Flag Interrupt Enable 0: CANFD message payload overflow flag interrupt disabled 1: CANFD message payload overflow flag interrupt enabled	R/W
15:12	—	These bits are read as 0. The write value should be 0.	R/W
16	TSRST	Timestamp Reset 0: Timestamp not reset 1: Timestamp reset	R/W
31:17	—	These bits are read as 0. The write value should be 0.	R/W

Note 1. This bit is not available in the classical CAN function.

The Global Control Register controls the global mode of the CANFD module and the timestamp function. The register also enables and disables the global error interrupts.

GMDC bits (Global Mode Control)

The GMDC bits can be used to configure the modes for the CANFD module. Additionally, if CFDGCTR.GSLPR bit is 1 when the CANFD module is in Reset mode, the CANFD module enters Global Sleep mode.

Setting the GMDC bits to 11b has no effect. Mode transition is described in detail in section 29.3.2. Global Modes.

Do not write to this bit when the CANFD module is in GL_SLEEP mode.

GSLPR bit (Global Sleep Request)

The GSLPR bit globally selects the sleep request for CANFD module including CAN channels. Channel sleep request is set automatically for channels.

Only write to this bit when the CANFD module is in GL_RESET or GL_SLEEP mode.

DEIE bit (DLC Check Interrupt Enable)

When the DEIE bit is 1, an interrupt is generated if a DLC error is detected in the received frames.

Do not write to this bit when the CANFD module is in GL_SLEEP mode.

MEIE bit (Message Lost Error Interrupt Enable)

When the MEIE bit is 1, an interrupt is generated if a message lost condition occurs.

Do not write to this bit when the CANFD module is in GL_SLEEP mode.

THLEIE bit (TX History List Entry Lost Interrupt Enable)

When the THLEIE bit is 1, an interrupt is generated if a TX history list entry lost condition occurs.

Do not write to this bit when the CANFD module is in GL_SLEEP mode.

CMPOFIE bit (CANFD Message Payload Overflow Flag Interrupt Enable)

When the CMPOFIE bit is 1, an interrupt is generated when a CANFD message payload overflow condition occurs.

Do not write to this bit when the CANFD module is in GL_SLEEP mode.

Note: This bit is not available in the classical CAN function

TSRST bit (Timestamp Reset)

When the TSRST bit is 1, the Global Timestamp Register is reset to 0x0000.

Do not write to this bit when the CANFD module is in GL_SLEEP or GL_RESET mode.

Read value is always 0.

This bit is cleared automatically by the CANFD module logic.

29.2.13 CFDGSTS : Global Status Register

Base address: CANFD = 0x400B_0000

Offset address: 0x001C

Bit position:	31	30	29	28	27	26	25	24	23	22	21	20	19	18	17	16
Bit field:	—	—	—	—	—	—	—	—	—	—	—	—	—	—	—	—
Value after reset:	0	0	0	0	0	0	0	0	0	0	0	0	0	0	0	0

Bit position:	15	14	13	12	11	10	9	8	7	6	5	4	3	2	1	0
Bit field:	—	—	—	—	—	—	—	—	—	—	—	—	GRAM INIT	GSLP STS	GHLT STS	GRST STS
Value after reset:	0	0	0	0	0	0	0	0	0	0	0	0	1	1	0	1

Bit	Symbol	Function	R/W
0	GRSTSTS	Global Reset Status 0: Not in Reset mode 1: In Reset mode	R
1	GHLTSTS	Global Halt Status 0: Not in Halt mode 1: In Halt mode	R
2	GSLPSTS	Global Sleep Status 0: Not in Sleep mode 1: In Sleep mode	R
3	GRAMINIT	Global RAM Initialization 0: RAM initialization is complete 1: RAM initialization is ongoing	R

Bit	Symbol	Function	R/W
31:4	—	These bits are read as 0.	R

The Global Status Register indicates the global status of the CANFD module.

GRSTSTS bit (Global Reset Status)

The GRSTSTS bit indicates the status of Global CANFD module Reset mode.

This bit is set automatically when the CANFD module enters GL_RESET mode. When the mode changes from GL_RESET mode to GL_SLEEP mode, this bit remains set.

This bit is cleared automatically when the CANFD module exits the GL_RESET mode.

GHLTSTS bit (Global Halt Status)

The GHLTSTS bit indicates the status of Global CANFD module Halt mode.

This bit is set automatically when the CANFD module enters GL_HALT mode.

This bit is cleared automatically when the CANFD module exits the GL_HALT mode.

GSLPSTS bit (Global Sleep Status)

The GSLPSTS bit indicates the status of Global CANFD module Sleep mode.

This bit is set automatically when the CANFD module enters GL_SLEEP mode.

This bit is cleared automatically when the CANFD module exits the GL_SLEEP mode.

GRAMINIT bit (Global RAM Initialization)

The GRAMINIT bit indicates the status of Global CANFD module RAM initialization.

This bit is set automatically when the CANFD module enters GL_SLEEP mode after a hardware reset.

This bit is cleared automatically when the CANFD module completed RAM initialization.

This bit is cleared when the test_mode input port is set to 1.

29.2.14 CFDGERFL : Global Error Flag Register

Base address: CANFD = 0x400B_0000

Offset address: 0x0020

Bit position:	31	30	29	28	27	26	25	24	23	22	21	20	19	18	17	16
Bit field:	—	—	—	—	—	—	—	—	—	—	—	—	—	—		EEF0
Value after reset:	0	0	0	0	0	0	0	0	0	0	0	0	0	0	0	0

Bit position:	15	14	13	12	11	10	9	8	7	6	5	4	3	2	1	0
Bit field:	—	—	—	—	—	—	—	—	—	—	—	—	CMPOF	THLES	MES	DEF
Value after reset:	0	0	0	0	0	0	0	0	0	0	0	0	0	0	0	0

Bit	Symbol	Function	R/W
0	DEF	DLC Error Flag 0: DLC error not detected 1: DLC error detected	R/W
1	MES	Message Lost Error Status 0: Message lost error not detected 1: Message lost error detected	R
2	THLES	TX History List Entry Lost Error Status 0: TX history list entry lost error not detected 1: TX history list entry lost error detected	R

Bit	Symbol	Function	R/W
3	CMPOF*1	CANFD Message Payload Overflow Flag 0: CANFD message payload overflow not detected 1: CANFD message payload overflow detected	R/W
15:4	—	These bits are read as 0. The write value should be 0.	R/W
16	EEF0	ECC Error Flag 0: ECC error not detected during TX-SCAN 1: ECC error detected during TX-SCAN	R/W
31:17	—	These bits are read as 0. The write value should be 0.	R/W

Note 1. This bit is not available in the classical CAN function.

The Global Error Flag register indicates the detection of global errors.

DEF bit (DLC Error Flag)

The DEF bit indicates the error status of the DLC.

Do not write to this bit when the CANFD module is in GL_SLEEP or GL_RESET mode. Writing 1 has no effect.

Do not use the bit clear instruction to clear this bit. Use the MOV instruction to ensure that only the specified bit is cleared. Other bits remain 1.

This bit is set automatically when a DLC error is detected in a received frame.

If the set from the CAN channel occurs simultaneously with the clear by the write access, then the bit is set

The bit is cleared by writing 0 to it.

This bit is cleared automatically in GL_RESET mode.

MES bit (Message Lost Error Status)

The MES bit indicates status of the message lost error.

This bit is set automatically when a FIFO message lost error is detected.

This bit is cleared automatically when:

- All FIFO message lost flags are cleared
- The CANFD module is in GL_RESET mode.

THLES bit (TX History List Entry Lost Error Status)

The THLES bit indicates status of the TX history list entry lost error.

This bit is set automatically when a TX history list entry lost error is detected.

This bit is cleared automatically when:

- All TX history list entry lost flags are cleared
- The CANFD module is in GL_RESET mode.

CMPOF bit (CANFD Message Payload Overflow Flag)

The CMPOF bit is set automatically when a CANFD message payload overflow is detected on at least one channel.

Do not write to this bit when the CANFD module is in GL_SLEEP or GL_RESET mode.

This bit is cleared by writing 0 to it. Writing 1 to this bit has no effect.

If the set from the CAN channel occurs simultaneously with the clear by the write access, then the bit is set.

Do not use the bit clear instruction to clear this bit. Use the MOV instruction to ensure that only the specified bit is cleared. Other bits remain 1.

This bit is cleared automatically in GL_RESET mode.

Note: This bit is not available in the classical CAN function

EEF0 bit (ECC Error Flag)

The EEF0 bit specifies whether an ECC error has occurred.

Do not write to this bit when the CANFD module is in GL_SLEEP or GL_RESET mode. Writing 1 to this bit has no effect.

If the set from the CAN channel occurs simultaneously with the clear by the write access, then the bit is set.

Do not use the bit clear instruction to clear this bit. Use the MOV instruction to ensure that only the specified bit is cleared. Other bits remain 1.

The bit is cleared by writing 0 to it. This bit is cleared automatically in GL_RESET mode.

29.2.15 CFDGTINTSTS : Global TX Interrupt Status Register

Base address: CANFD = 0x400B_0000

Offset address: 0x00A4

Bit position:	31	30	29	28	27	26	25	24	23	22	21	20	19	18	17	16
Bit field:	—	—	—	—	—	—	—	—	—	—	—	—	—	—	—	—
Value after reset:	0	0	0	0	0	0	0	0	0	0	0	0	0	0	0	0

Bit position:	15	14	13	12	11	10	9	8	7	6	5	4	3	2	1	0
Bit field:	—	—	—	—	—	—	—	—	—	—	—	THIF0	CFTIF0	TQIF0	TAI0	TSIF0
Value after reset:	0	0	0	0	0	0	0	0	0	0	0	0	0	0	0	0

Bit	Symbol	Function	R/W
0	TSIF0	TX Successful Interrupt Flag 0: Channel n TX Successful Interrupt flag not set 1: Channel n TX Successful Interrupt flag set	R
1	TAI0	TX Abort Interrupt Flag 0: Channel n TX Abort Interrupt flag not set 1: Channel n TX Abort Interrupt flag set	R
2	TQIF0	TX Queue Interrupt Flag 0: Channel n TX Queue Interrupt flag not set 1: Channel n TX Queue Interrupt flag set	R
3	CFTIF0	COM FIFO TX Mode Interrupt Flag 0: Channel n COM FIFO TX Mode Interrupt flag not set 1: Channel n COM FIFO TX Mode Interrupt flag set	R
4	THIF0	TX History List Interrupt 0: Channel n TX History List Interrupt flag not set 1: Channel n TX History List Interrupt flag set	R
31:5	—	These bits are read as 0.	R

The Global TX Interrupt Status register indicates the detection of transmit specific interrupts.

TSIF0 bit (TX Successful Interrupt Flag)

The TSIF0 bit is set to 1 when the TX Successful Interrupt flag of the related channel is set (when the interrupt is enabled). This bit is cleared automatically:

- When the related TX MB Result Status bits are cleared (when the interrupt enable is disabled)
- When in GL_RESET or CH_RESET mode.

TAI0 bit (TX Abort Interrupt Flag)

The TAIF0 bit is set to 1 when the TX Abort Interrupt flag of the related channel is set (when the interrupt is enabled).

This bit is cleared automatically:

- When the related TX MB Result Status bits are cleared (when the interrupt enable is disabled)
- When in GL_RESET or CH_RESET mode.

TQIF0 bit (TX Queue Interrupt Flag)

The TQIF0 bit is set to 1 when the TX Queue Interrupt flag of the related channel is set (when the interrupt is enabled). This bit is cleared automatically:

- When the related TX Queue Interrupt flag is cleared (when the interrupt is enable disabled)
- When in GL_RESET or CH_RESET mode.

CFTIF0 bit (COM FIFO TX Mode Interrupt Flag)

The CFTIF0 bit is set to 1 when the related COM TX FIFO Mode Interrupt flag (CFDCFSTS.CFTXIF) is set (when the interrupt is enabled).

This bit is cleared automatically:

- When the related COM TX FIFO Mode Interrupt flag (CFDCFSTS.CFTXIF) is cleared (when the interrupt enable is disabled)
- When in GL_RESET or CH_RESET mode.

THIF0 bit (TX History List Interrupt)

The THIF0 bit is set to 1 when the related TX History List Interrupt flag (CFDTHLSTS.THLIF) is set (when the interrupt is enabled).

This bit is cleared automatically:

- When the related TX History List Interrupt flag (CFDTHLSTS.THLIF) is cleared (when the interrupt enable is disabled)
- When in GL_RESET or CH_RESET mode.

29.2.16 CFDGTSC : Global Timestamp Counter Register

Base address: CANFD = 0x400B_0000

Offset address: 0x0024

Bit position:	31																15															0
Bit field:	—	—	—	—	—	—	—	—	—	—	—	—	—	—	—	—	TS[15:0]															
Value after reset:	0	0	0	0	0	0	0	0	0	0	0	0	0	0	0	0	0	0	0	0	0	0	0	0	0	0	0	0	0	0	0	0

Bit	Symbol	Function	R/W
15:0	TS[15:0]	Timestamp value	R
31:16	—	These bits are read as 0.	R

The Global Timestamp Counter register stores the timestamp based on the selected configuration.

TS[15:0] bits (Timestamp value)

The Timestamp value is stored in the Global Timestamp Counter register based on the configuration of TSSS, TSBTCS and TSP. The accuracy of the timestamp counter cannot be guaranteed when transitioning to halt state.

The Timestamp value is stored in this register based on the configuration of TSSS, TSBTCS and TSP.

Do not write to bits TS[15:0] when the CANFD module is in GL_RESET or GL_SLEEP mode.

The TS[15:0] bits are cleared automatically in GL_RESET mode.

29.2.17 CFDGAFLECTR : Global Acceptance Filter List Entry Control Register

Base address: CANFD = 0x400B_0000

Offset address: 0x0028

Bit position:	31	30	29	28	27	26	25	24	23	22	21	20	19	18	17	16
Bit field:	—	—	—	—	—	—	—	—	—	—	—	—	—	—	—	—
Value after reset:	0	0	0	0	0	0	0	0	0	0	0	0	0	0	0	0

Bit position:	15	14	13	12	11	10	9	8	7	6	5	4	3	2	1	0
Bit field:	—	—	—	—	—	—	—	AFLDAE	—	—	—	—	—	—	—	—
Value after reset:	0	0	0	0	0	0	0	0	0	0	0	0	0	0	0	0

Bit	Symbol	Function	R/W
7:0	—	These bits are read as 0. The write value should be 0.	R/W
8	AFLDAE	Acceptance Filter List Data Access Enable 0: Acceptance Filter List data access disabled 1: Acceptance Filter List data access enabled	R/W
31:9	—	These bits are read as 0. The write value should be 0.	R/W

The Global Acceptance Filter List Entry Control Register is used to select the Global Acceptance Filter List page for reading or writing entries into the Global Acceptance Filter List.

AFLDAE bit (Acceptance Filter List Data Access Enable)

The AFLDAE bit prevents write access to the Acceptance Filter List when cleared after configuration of the Acceptance Filter List.

Data can be read from the Acceptance Filter List independent of the status of this bit.

Do not write to this bit when the CANFD module is in GL_SLEEP mode. Set this bit to enable write access for the Acceptance Filter List.

29.2.18 CFDGAFLCFG : Global Acceptance Filter List Configuration Register

Base address: CANFD = 0x400B_0000

Offset address: 0x002C

Bit position:	31											20			16																0
Bit field:	—	—	—	—	—	—	—	—	—	—	—	RNC0[4:0]				—	—	—	—	—	—	—	—	—	—	—	—	—	—	—	—
Value after reset:	0	0	0	0	0	0	0	0	0	0	0	0	0	0	0	0	0	0	0	0	0	0	0	0	0	0	0	0	0	0	0

Bit	Symbol	Function	R/W
15:0	—	These bits are read as 0. The write value should be 0.	R/W
20:16	RNC0[4:0]	Rule Number Number of rules dedicated	R/W
31:21	—	These bits are read as 0. The write value should be 0.	R/W

The Global Acceptance Filter List Configuration Register is used to define the number of rules for entries in the Acceptance Filter List.

The total number of available entries in the Acceptance Filter List is 16.

RNC0[4:0] bits (Rule Number)

The RNC0[4:0] bits define the number of rules in the Acceptance Filter List.

Only write to these bits when the CANFD module is in GL_RESET mode. These bits can set to 5 bits for 16 rules.

29.2.19 CFDGAFLIDr : Global Acceptance Filter List ID Registers (r = 1 to 16)

Base address: CANFD = 0x400B_0000

Offset address: 0x0120 + 0x0010 × (r - 1)

Bit position:	31	30	29	28	27	26	25	24	23	22	21	20	19	18	17	16
Bit field:	GAFLIDE	GAFLRTR	GAFLLB	GAFLID[28:16]												
Value after reset:	0	0	0	0	0	0	0	0	0	0	0	0	0	0	0	0

Bit position:	15	14	13	12	11	10	9	8	7	6	5	4	3	2	1	0
Bit field:	GAFLID[15:0]															
Value after reset:	0	0	0	0	0	0	0	0	0	0	0	0	0	0	0	0

Bit	Symbol	Function	R/W
28:0	GAFLID[28:0]	Global Acceptance Filter List Entry ID Field ID part of the Global Acceptance Filter List entry	R/W
29	GAFLLB	Global Acceptance Filter List Entry Loopback Configuration 0: Global Acceptance Filter List entry ID for acceptance filtering with attribute RX 1: Global Acceptance Filter List entry ID for acceptance filtering with attribute TX	R/W
30	GAFLRTR	Global Acceptance Filter List Entry RTR Field 0: Data frame 1: Remote frame	R/W
31	GAFLIDE	Global Acceptance Filter List Entry IDE Field 0: Standard identifier of rule entry ID is valid for acceptance filtering 1: Extended identifier of rule entry ID is valid for acceptance filtering	R/W

The Global Acceptance Filter List ID Registers are used to configure the ID field for the rules of entries in the Global Acceptance Filter List.

GAFLID[28:0] bits (Global Acceptance Filter List Entry ID Field)

The GAFLID[28:0] bits represent the CAN identifier (ID) field of each entry in the Global Acceptance Filter List.

Do not write to these bits when CFDGAFLECTR.AFLDAE bit is 0.

Only write to these bits when the related CANFD channel is in CH_RESET or CH_HALT mode.

GAFLLB bit (Global Acceptance Filter List Entry Loopback Configuration)

The GAFLLB bit selects whether entry in the Global Acceptance Filter List gets the attribute RX or TX.

This attribute determines the validity of the entry in Mirror mode, Loopback test mode, and during standard (non-loopback) reception. See section 29.5.5. Loopback Modes for detailed description of the validity of the Global Acceptance Filter List entry depending on transmitter/receiver case, the type of loopback mode, and RX/TX attribute.

Do not write to this bit when CFDGAFLECTR.AFLDAE bit is 0.

Only write to this bit when the related CANFD channel is in CH_RESET or CH_HALT mode.

GAFLRTR bit (Global Acceptance Filter List Entry RTR Field)

The GAFLRTR bit allows the configuration of the specified frame format (data frame or remote frame) for each entry of the Global Acceptance Filter List. For each rule entry in a CAN channel, the acceptance filter process compares this bit against the RTR bit of the received CAN message.

Do not write to this bit when CFDGAFLECTR.AFLDAE bit is 0.

Only write to this bit when the related CANFD channel is in CH_RESET or CH_HALT mode.

GAFLIDE bit (Global Acceptance Filter List Entry IDE Field)

The GAFLIDE bit allows the configuration of the ID format (standard ID or extended ID) for each entry in the Global Acceptance Filter List. For each rule entry in a CAN channel, the acceptance filter process compares this bit against the IDE bit of the received CAN message.

Do not write to this bit when CFDGAFLECTR.AFLDAE bit is 0.

Only write to this bit when the related CANFD channel is in CH_RESET or CH_HALT mode.

29.2.20 CFDGAFLMr : Global Acceptance Filter List Mask Registers (r = 1 to 16)

Base address: CANFD = 0x400B_0000

Offset address: 0x0124 + 0x0010 × (r - 1)

Bit position:	31	30	29	28	27	26	25	24	23	22	21	20	19	18	17	16
Bit field:	GAFLIDEM	GAFLRTRM	GAFLIFL1	GAFLIDM[28:16]												
Value after reset:	0	0	0	0	0	0	0	0	0	0	0	0	0	0	0	0

Bit position:	15	14	13	12	11	10	9	8	7	6	5	4	3	2	1	0
Bit field:	GAFLIDM[15:0]															
Value after reset:	0	0	0	0	0	0	0	0	0	0	0	0	0	0	0	0

Bit	Symbol	Function	R/W
28:0	GAFLIDM[28:0]	Global Acceptance Filter List ID Mask Field Global Acceptance Filter List Mask field bits for ID field	R/W
29	GAFLIFL1	Global Acceptance Filter List Information Label 1 Global Acceptance Filter List information label bit 1	R/W
30	GAFLRTRM	Global Acceptance Filter List Entry RTR Mask 0: RTR bit is not used for ID matching 1: RTR bit is used for ID matching	R/W
31	GAFLIDEM	Global Acceptance Filter List IDE Mask 0: IDE bit is not used for ID matching 1: IDE bit is used for ID matching	R/W

The Global Acceptance Filter List Mask Registers are used to configure the Mask field of each rule for entries in the Global Acceptance Filter List.

GAFLIDM[28:0] bits (Global Acceptance Filter List ID Mask Field)

GAFLIDM[28:0] bits are the filter mask bits for the related bits in the CAN Identifier field of each Global Acceptance Filter List entry.

0	Corresponding STD-ID/EXT-ID bit is not used for ID matching
1	Corresponding STD-ID/EXT-ID bit is used for ID matching

Do not write to these bits when CFDGAFLECTR.AFLDAE bit is 0.

Only write to these bits when the related CANFD channel is in CH_RESET or CH_HALT mode.

GAFLIFL1 bit (Global Acceptance Filter List Information Label 1)

The GAFLIFL1 bit allows the configuration of a 2-bit information label to be attached to a received message accepted by the associated entry in the Global Acceptance Filter List. This bit is a MSB bit of an information label.

Do not write to this bit when CFDGAFLECTR.AFLDAE bit is 0.

Only write to this bit when the related CANFD channel is in CH_RESET or CH_HALT mode.

This bit is stored in the Information Label Field [1] (CFDRMFDSTSb.RMIFL [1], CFDRFFDSTSb.RFIFL [1], CFDCFFDCSTS.CFIFL [1]) of the storage location of an incoming message.

GAFLRTRM bit (Global Acceptance Filter List Entry RTR Mask)

The GAFLRTRM bit allows the configuration of the RTR mask bit for each entry in the Global Acceptance Filter List.

Do not write to this bit when CFDGAFLECTR.AFLDAE bit is 0.

Only write to this bit when the related CANFD channel is in CH_RESET or CH_HALT mode.

GAFLIDEM bit (Global Acceptance Filter List IDE Mask)

The GAFLIDEM bit allows the configuration of the IDE mask bit for each entry in the Global Acceptance Filter List.

When the IDE mask bit is 0, the ID comparison depends on the received IDE bit.

If the received IDE bit is 0, the STD-ID comparison takes place.

If the received IDE bit is 1, the EXT-ID comparison takes place.

Do not write to this bit when CFDGAFLECTR.AFLDAE bit is 0.

Only write to this bit when the related CANFD channel is in CH_RESET or CH_HALT mode.

29.2.21 CFDGAFLP0r : Global Acceptance Filter List Pointer 0 Registers (r = 1 to 16)

Base address: CANFD = 0x400B_0000

Offset address: 0x0128 + 0x0010 × (r - 1)

Bit position:	31	30	29	28	27	26	25	24	23	22	21	20	19	18	17	16
Bit field:	GAFLPTR[15:0]															
Value after reset:	0	0	0	0	0	0	0	0	0	0	0	0	0	0	0	0

Bit position:	15	14	13	12	11	10	9	8	7	6	5	4	3	2	1	0
Bit field:	GAFL RMV	—	—	GAFLRMDP[4:0]					GAFLI FL0	—	—	—	GAFLDLC[3:0]			
Value after reset:	0	0	0	0	0	0	0	0	0	0	0	0	0	0	0	0

Bit	Symbol	Function	R/W
3:0	GAFLDLC[3:0]	Global Acceptance Filter List DLC Field Minimum number of data bytes in a data frame required for acceptance	R/W
6:4	—	These bits are read as 0. The write value should be 0.	R/W
7	GAFLIFL0	Global Acceptance Filter List Information Label 0	R/W
12:8	GAFLRMDP[4:0]	Global Acceptance Filter List RX Message Buffer Direction Pointer RX message buffer number for storage of received messages	R/W
14:13	—	These bits are read as 0. The write value should be 0.	R/W
15	GAFLRMV	Global Acceptance Filter List RX Message Buffer Valid 0: Single message buffer direction pointer is invalid 1: Single message buffer direction pointer is valid	R/W
31:16	GAFLPTR[15:0]	Global Acceptance Filter List Pointer	R/W

The Global Acceptance Filter List Pointer 0 Registers are used to configure the data length code (DLC), software pointer, single message buffer select, and message buffer direction pointer for each rule entry in the Global Acceptance Filter List.

GAFLDLC[3:0] bits (Global Acceptance Filter List DLC Field)

The GAFLDLC[3:0] bits allow the configuration of a minimum data length code (DLC) value for a message to be accepted by the associated entry in the Global Acceptance Filter List (automatic DLC filter function).

DLC filter process is only passed if the DLC value of the message accepted by an entry in the Global Acceptance Filter List is equal to or higher than the DLC value configured for this associated Global Acceptance Filter List entry. Automatic DLC filter function is disabled for the corresponding rule entry when this field is set to 0.

Table 29.3 shows DLC value that can be configured.

Table 29.3 Configuration of DLC value

Format	DLC[3]	DLC[2]	DLC[1]	DLC[0]	Description
CAN and CANFD	0	0	0	0	DLC of received message = 0 or more (DLC filter check is disabled)
CAN and CANFD	0	0	0	1	DLC of received message = 1 or more
CAN and CANFD	0	0	1	0	DLC of received message = 2 or more
CAN and CANFD	0	0	1	1	DLC of received message = 3 or more
CAN and CANFD	0	1	0	0	DLC of received message = 4 or more
CAN and CANFD	0	1	0	1	DLC of received message = 5 or more
CAN and CANFD	0	1	1	0	DLC of received message = 6 or more
CAN and CANFD	0	1	1	1	DLC of received message = 7 or more
CAN	1	x	x	x	DLC of received message = 8 or more
CANFD	1	0	0	0	DLC of received message = 8 or more*1
CANFD	1	0	0	1	DLC of received message = 12 or more*1
CANFD	1	0	1	0	DLC of received message = 16 or more*1
CANFD	1	0	1	1	DLC of received message = 20 or more*1
CANFD	1	1	0	0	DLC of received message = 24 or more*1
CANFD	1	1	0	1	DLC of received message = 32 or more*1
CANFD	1	1	1	0	DLC of received message = 48 or more*1
CANFD	1	1	1	1	DLC of received message = 64*1

Note 1. This setting is not available in the classical CAN function.

Do not write to these bits when CFDGAFLECTR.AFLDAE bit is 0.

Only write to these bits when the related CANFD channel is in CH_RESET or CH_HALT mode.

GAFLIFL0 bit (Global Acceptance Filter List Information Label 0)

The GAFLIFL0 bit allows the configuration of a 2-bit information label that can be attached to a received message accepted by the related Global Acceptance Filter List entry. This bit is a LSB bit of an information label.

You cannot write to this bit when CFDGAFLECTR.AFLDAE bit is 0.

Only write to the bit when the related CANFD channel is in CH_RESET or CH_HALT mode.

This bit is stored in Information Label Field[0] (CFDRMFDSTSb.RMIFL[0], CFDRFFDSTSb.RFIFL[0], CFDCFFDCSTS.CFIFL[0]) of the storage location of an incoming message.

GAFLRMDP[4:0] bits (Global Acceptance Filter List RX Message Buffer Direction Pointer)

The GAFLRMDP[4:0] bits allow the configuration of a single reception message buffer as the destination target for a received message that passes the acceptance check of the related Global Acceptance Filter List entry. The value entered is the single destination message buffer number.

Do not write to these bits when CFDGAFLECTR.AFLDAE bit is 0.

Only write to these bits when the related CANFD channel is in CH_RESET or CH_HALT mode.

CFDRMNB.NRXMB[4:0] is the value entered in the RX Message Buffer Number Register to configure the number of RX message buffers. The value to be entered in CFDGAFLP0r.GAFLRMDP[4:0] bits should only be between 0x00 and CFDMNB.NMB[4:0] to 1 less.

If CFDRMNB.NRXMB[4:0] = 0x00, the GAFLRMV bit should be configured as 0.

GAFLRMV bit (Global Acceptance Filter List RX Message Buffer Valid)

The GAFLRMV bit allows the enabling or disabling of a single reception message buffer as the target for a received message that passes the acceptance check of the related Global Acceptance Filter List entry.

Do not write to these bits when CFDGAFLECTR.AFLDAE bit is 0.

Only write to these bits when the related CANFD channel is in CH_RESET or CH_HALT mode.

GAFLPTR[15:0] bits (Global Acceptance Filter List Pointer)

The GAFLPTR[15:0] bits allow the configuration of a 16-bit pointer to be attached to a received message accepted by the related Global Acceptance Filter List entry. The pointer is added during message storage in the Message Buffer area and can be used by the application as a support function. The pointer information can be used for example, to support PDU Identifier allocation for the received message in AUTOSAR systems.

Do not write to these bits when CFDGAFLECTR.AFLDAE bit is 0.

Only write to these bits when the related CANFD channel is in CH_RESET or CH_HALT mode.

29.2.22 CFDGAFLP1r : Global Acceptance Filter List Pointer 1 Registers (r = 1 to 16)

Base address: CANFD = 0x400B_0000

Offset address: 0x012C + 0x0010 × (r - 1)

Bit position:	31	30	29	28	27	26	25	24	23	22	21	20	19	18	17	16
Bit field:	—	—	—	—	—	—	—	—	—	—	—	—	—	—	—	—
Value after reset:	0	0	0	0	0	0	0	0	0	0	0	0	0	0	0	0

Bit position:	15	14	13	12	11	10	9	8	7	6	5	4	3	2	1	0
Bit field:	—	—	—	—	—	—	—	GAFL FDP8	—	—	—	—	—	—	GAFL FDP1	GAFL FDP0
Value after reset:	0	0	0	0	0	0	0	0	0	0	0	0	0	0	0	0

Bit	Symbol	Function	R/W
0	GAFLFDP0	Global Acceptance Filter List FIFO Direction Pointer FIFO direction pointer bits for received message storage 0: Disable RX FIFO 0 as target for reception 1: Enable RX FIFO 0 as target for reception	R/W
1	GAFLFDP1	Global Acceptance Filter List FIFO Direction Pointer FIFO direction pointer bits for received message storage 0: Disable RX FIFO 1 as target for reception 1: Enable RX FIFO 1 as target for reception	R/W
7:2	—	These bits are read as 0. The write value should be 0.	R/W
8	GAFLFDP8	Global Acceptance Filter List FIFO Direction Pointer FIFO direction pointer bits for received message storage 0: Disable Common FIFO as target for reception 1: Enable Common FIFO as target for reception	R/W
31:9	—	These bits are read as 0. The write value should be 0.	R/W

The Global Acceptance Filter List Pointer 1 registers are used to configure the FIFO direction pointer fields in each Rule Entry of the Global Acceptance Filter List.

GAFLFDP8, GAFLFDP1, GAFLFDP0 bits (Global Acceptance Filter List FIFO Direction Pointer)

These bits allow the configuration of FIFO Buffers as the target for a received message passing the acceptance check of the related Global Acceptance Filter List entry. Each bit of the GAFLFDP8, GAFLFDP1, GAFLFDP0 is configuring a dedicated FIFO.

Users cannot write to these bits when CFDGAFLECTR.AFLDAE bit is 0.

For storage in Common FIFO, target for reception can only be those Common FIFO Buffers that are configured as RX FIFO.

Only write to these bits when the related CANFD channel is in CH_RESET or CH_HALT mode.

Users should only configure up to 2 destination FIFO Buffers or 1 destination FIFO Buffers plus one RX Message Buffer.

29.2.23 CFDRMNB : RX Message Buffer Number Register

Base address: CANFD = 0x400B_0000

Offset address: 0x0030

Bit position:	31																					10		8				4				0
Bit field:	—	—	—	—	—	—	—	—	—	—	—	—	—	—	—	—	—	—	—	—	—	RMPLS[2:0]			—	—	—	NRXMB[4:0]				
Value after reset:	0	0	0	0	0	0	0	0	0	0	0	0	0	0	0	0	0	0	0	0	0	0	0	0	0	0	0	0	0	0	0	0

Bit	Symbol	Function	R/W
4:0	NRXMB[4:0]	Number of RX Message Buffers	R/W
7:5	—	These bits are read as 0. The write value should be 0.	R/W
10:8	RMPLS[2:0]	Reception Message Buffer Payload Data Size 0 0 0: 8 bytes 0 0 1: 12 bytes 0 1 0: 16 bytes 0 1 1: 20 bytes 1 0 0: 24 bytes 1 0 1: 32 bytes 1 1 0: 48 bytes 1 1 1: 64 bytes	R/W
31:11	—	These bits are read as 0. The write value should be 0.	R/W

The RX Message Buffer Number register is used to configure the total number of RX message buffers allocated to channels.

NRXMB[4:0] bits (Number of RX Message Buffers)

The NRXMB[4:0] bits are used to configure the number of RX message buffers.

Only write to these bits when the CANFD module is in GL_RESET mode.

Enter only values between 0 and 16 inclusive, with 0x00 indicating that no RX message buffer is allocated.

RMPLS[2:0] bits (Reception Message Buffer Payload Data Size)

The RMPLS[2:0] bits are used to configure the message buffer payload data size.

Only write to these bits when the CANFD module is in GL_RESET mode.

29.2.24 CFDRMND : RX Message Buffer New Data Register

Base address: CANFD = 0x400B_0000

Offset address: 0x0034

Bit position:	15	14	13	12	11	10	9	8	7	6	5	4	3	2	1	0
Bit field:	RMNS[15:0]															
Value after reset:	0	0	0	0	0	0	0	0	0	0	0	0	0	0	0	0

Bit	Symbol	Function	R/W
15:0	RMNS[15:0]	RX Message Buffer New Data Status 0: New data not stored in corresponding RX message buffer 1: New data stored in corresponding RX message buffer	R/W

The RX Message Buffer New Data Status Register specifies the new data storage status of the RX message buffers.

RMNS[15:0] bits (RX Message Buffer New Data Status)

The RMNS[15:0] bits indicate the status of new data for the corresponding RX message buffer. RMNS bit [0] corresponds to RX message buffer [0] and so on.

The bit position of CFDRMND corresponds to the buffer number of RXMB.

Do not write to these bits when the CANFD module is in GL_RESET or GL_SLEEP mode. Writing 1 has no effect.

These bits cannot be cleared when message storage in the corresponding RX message buffer is in progress.
Do not use the bit clear instruction to clear these bits. Use the MOV instruction to ensure that only the specified bit is cleared. Other bits remain 1.

These bits are set automatically when storage of new messages are in the corresponding RX message buffer. These bits are cleared by writing 0. These bits are cleared automatically when the CANFD module is in GL_RESET mode.

When CFDRMNB.RMPLS = 000b (maximum 8 bytes payload), the duration of message storage is 6 PCLKB cycles.

When CFDRMNB.RMPLS > 000b, the duration of message storage is 6 PCLKB cycles + 1 for each 4 bytes (maximum of 20 PCLKB cycles for 64 bytes).

Note: This feature is not available in the classical CAN function.

29.2.25 CFDRFCCa : RX FIFO Configuration/Control Registers a (a = 0 to 1)

Base address: CANFD = 0x400B_0000

Offset address: 0x003C + 0x04 × a

Bit position:	31	30	29	28	27	26	25	24	23	22	21	20	19	18	17	16
Bit field:	—	—	—	—	—	—	—	—	—	—	—	—	—	—	—	—
Value after reset:	0	0	0	0	0	0	0	0	0	0	0	0	0	0	0	0

Bit position:	15	14	13	12	11	10	9	8	7	6	5	4	3	2	1	0
Bit field:	RFIGCV[2:0]			RFIM	—	RFDC[2:0]			—	RFPLS[2:0]			—	—	RFIE	RFE
Value after reset:	0	0	0	0	0	0	0	0	0	0	0	0	0	0	0	0

Bit	Symbol	Function	R/W
0	RFE	RX FIFO Enable 0: FIFO disabled 1: FIFO enabled	R/W
1	RFIE	RX FIFO Interrupt Enable 0: FIFO interrupt generation disabled 1: FIFO interrupt generation enabled	R/W
3:2	—	These bits are read as 0. The write value should be 0.	R/W
6:4	RFPLS[2:0]*1	Rx FIFO Payload Data Size Configuration 0 0 0: 8 bytes 0 0 1: 12 bytes 0 1 0: 16 bytes 0 1 1: 20 bytes 1 0 0: 24 bytes 1 0 1: 32 bytes 1 1 0: 48 bytes 1 1 1: 64 bytes	R/W
7	—	This bit is read as 0. The write value should be 0.	R/W

Bit	Symbol	Function	R/W
10:8	RFDC[2:0]	RX FIFO Depth Configuration 0 0 0: FIFO Depth = 0 message 0 0 1: FIFO Depth = 4 messages 0 1 0: FIFO Depth = 8 messages 0 1 1: FIFO Depth = 16 messages 1 0 0: FIFO Depth = 32 essages 1 0 1: FIFO Depth = 48 messages 1 1 0: Reserved 1 1 1: Reserved	R/W
11	—	This bit is read as 0. The write value should be 0.	R/W
12	RFIM	RX FIFO Interrupt Mode 0: Interrupt generated when RX FIFO counter reaches RFIGCV value from values smaller than RFIGCV 1: Interrupt generated at the end of every received message storage	R/W
15:13	RFIGCV[2:0]	RX FIFO Interrupt Generation Counter Value 0 0 0: Interrupt generated when FIFO is 1/8th full 0 0 1: Interrupt generated when FIFO is 1/4th full 0 1 0: Interrupt generated when FIFO is 3/8th full 0 1 1: Interrupt generated when FIFO is 1/2 full 1 0 0: Interrupt generated when FIFO is 5/8th full 1 0 1: Interrupt generated when FIFO is 3/4th full 1 1 0: Interrupt generated when FIFO is 7/8th full 1 1 1: Interrupt generated when FIFO is full	R/W
31:16	—	These bits are read as 0. The write value should be 0.	R/W

Note 1. These bits are not available in the classical CAN function.

The RX FIFO Configuration/Control Registers are used to configure and control the two RX FIFOs.

RFE bit (RX FIFO Enable)

The RFE bit enables the FIFO. When this bit is set to 0, the RX FIFO is cleared to empty.

Only write to this bit when the CANFD module is in GL_HALT or GL_OPERATION mode.

This bit can only be set if the configured FIFO depth is greater than 0x000 (CFDRFCCa.RFDC > 0x000) and less than 0x110.

Set the RFE bit with a separate write access to the CFDRFCCa register, after all the other bits in the CFDRFCCa register are set.

This bit is cleared automatically when the CANFD module is in GL_RESET mode.

RFIE bit (RX FIFO Interrupt Enable)

The RFIE bit enables generation of the FIFO interrupt.

Do not write to this bit when the CANFD module is in GL_SLEEP mode.

RFPLS[2:0] bits (Rx FIFO Payload Data Size Configuration)

The RFPLS[2:0] bits define the message data payload allocation in the RAM.

This is the maximum number of bytes which can be received by this FIFO.

Only write to these bits when the CANFD module is in GL_RESET mode.

Note: These bits are not available in the classical CAN function.

RFDC[2:0] bits (RX FIFO Depth Configuration)

The RFDC[2:0] bits select the depth of the FIFO in terms of the number of messages. If the FIFO depth is configured to 0 messages, the FIFO cannot be used.

Only write to these bits when the CANFD module is in GL_RESET mode.

RFIM bit (RX FIFO Interrupt Mode)

The RFIM bit selects the interrupt generation condition for the FIFO.

Do not write to this bit when the CANFD module is in GL_SLEEP mode.

Only write to this bit when the CANFD module is in GL_RESET mode.

RFIGCV[2:0] bits (RX FIFO Interrupt Generation Counter Value)

The RFIGCV[2:0] bits select the counter value of the FIFO for generation of FIFO interrupts. These values represent fractions of the FIFO depth for which an interrupt is generated.

Do not write to these bits when the CANFD module is in GL_SLEEP mode.

The setting of the RFIGCV[2:0] bits should be synchronized with the RFDC[2:0] bits.

Only write to these bits when the CANFD module is in GL_RESET mode.

29.2.26 CFDRFSTSa : RX FIFO Status Registers a (a = 0 to 1)

Base address: CANFD = 0x400B_0000

Offset address: 0x0044 + 0x04 × a

Bit position:	31	30	29	28	27	26	25	24	23	22	21	20	19	18	17	16
Bit field:	—	—	—	—	—	—	—	—	—	—	—	—	—	—	—	—
Value after reset:	0	0	0	0	0	0	0	0	0	0	0	0	0	0	0	0

Bit position:	15	14	13	12	11	10	9	8	7	6	5	4	3	2	1	0
Bit field:	—	—	RFMC[5:0]						—	—	—	—	RFIF	RFMLT	RFFLL	RFEMP
Value after reset:	0	0	0	0	0	0	0	0	0	0	0	0	0	0	0	1

Bit	Symbol	Function	R/W
0	RFEMP	RX FIFO Empty 0: FIFO not empty 1: FIFO empty	R
1	RFFLL	RX FIFO Full 0: FIFO not full 1: FIFO full	R
2	RFMLT	RX FIFO Message Lost 0: No message lost in FIFO 1: FIFO message lost	R/W
3	RFIF	RX FIFO Interrupt Flag 0: FIFO interrupt condition not satisfied 1: FIFO interrupt condition satisfied	R/W
7:4	—	These bits are read as 0. The write value should be 0.	R/W
13:8	RFMC[5:0]	RX FIFO Message Count Number of messages stored in FIFO	R
31:14	—	These bits are read as 0. The write value should be 0.	R/W

The RX FIFO Status Registers show the status of messages stored in the corresponding FIFO buffers.

RFEMP bit (RX FIFO Empty)

The RFEMP bit is set automatically when:

- The RFMC bit is 0
- RX FIFO is disabled by setting the CFDRFCCa.RFE bit to 0
- The CANFD module is in GL_RESET mode.

The RFEMP bit is cleared automatically when the first message is stored in the RX FIFO buffer.

RFFLL bit (RX FIFO Full)

The RFFLL bit is set automatically when the number of CAN messages stored in the FIFO buffer matches the configured FIFO depth.

The RFFLL is cleared automatically when:

- The number of CAN messages stored in the FIFO buffer is less than the configured FIFO depth
- RX FIFO is disabled by setting the CFDRFCCa.RFE bit to 0
- The CANFD module is in GL_RESET mode.

RFMLT bit (RX FIFO Message Lost)

Only write to the RFMLT bit when CANFD module is in GL_HALT or GL_OPERATION mode. Writing 1 has no effect.

Do not use the bit clear instruction to clear this bit. Use the MOV instruction to ensure that only the specified bit is cleared. Other bits remain 1.

This bit is set automatically whenever a message is lost due to attempted storage when the FIFO buffer is already full. If a set from the CAN channel occurs simultaneously with a clear by a write access, then the bit is set.

The bit is cleared:

- By writing 0 to it
- When the CANFD module is in GL_RESET mode.

RFIF bit (RX FIFO Interrupt Flag)

The RFIF bit is set automatically when the configured interrupt condition is satisfied. This bit is not automatically cleared when the RX FIFO buffer is disabled.

Only write to this bit when the CANFD module is in GL_HALT or GL_OPERATION mode. Writing 1 has no effect.

Do not use the bit clear instruction to clear this bit. Use the MOV instruction to ensure that only the specified bit is cleared. Other bits remain 1.

If a set from the CAN channel occurs simultaneously with a clear by a write access, then this bit is set.

The bit is cleared by writing 0 to it. The bit is also cleared when CANFD module is in GL_RESET mode.

RFMC[5:0] bits (RX FIFO Message Count)

The RFMC[5:0] bits indicate the number of CAN messages stored in the RX FIFO buffer that can be read by the CPU.

These bits are cleared automatically when the FIFO is disabled and when the CANFD module is in GL_RESET mode.

29.2.27 CFDRFPCTRa : RX FIFO Pointer Control Registers a (a = 0 to 1)

Base address: CANFD = 0x400B_0000

Offset address: 0x004C + 0x04 × a

Bit position:	31																															7						0
Bit field:	—	—	—	—	—	—	—	—	—	—	—	—	—	—	—	—	—	—	—	—	—	—	—	—	—	RFPC[7:0]												
Value after reset:	0	0	0	0	0	0	0	0	0	0	0	0	0	0	0	0	0	0	0	0	0	0	0	0	0	0	0	0	0	0	0	0	0	0	0	0	0	0

Bit	Symbol	Function	R/W
7:0	RFPC[7:0]	RX FIFO Pointer Control Increments read pointer of the corresponding RX FIFO buffers	W
31:8	—	The write value should be 0.	W

The RX FIFO Pointer Control Registers can be used to increment the read pointer of the corresponding RX FIFO buffers.

RFPC bits (RX FIFO Pointer Control)

When the value 0xFF is written to the RFPC bits, the pointer of the corresponding RX FIFO buffer is moved to the next FIFO entry. Only write 0xFF to these registers when the corresponding RX FIFO buffer is enabled and not empty.

The read value from these bits is always 0x00.

Only write to these bits when the CANFD module is in GL_HALT or GL_OPERATION mode.

Do not write to the RX FIFO Pointer Control registers when DMA is enabled.

29.2.28 CFDCFCC : Common FIFO Configuration/Control Register

Base address: CANFD = 0x400B_0000

Offset address: 0x0054

Bit position:	31	30	29	28	27	26	25	24	23	22	21	20	19	18	17	16
Bit field:	CFITT[7:0]								CFDC[2:0]			—	—	—	CFTML[1:0]	
Value after reset:	0	0	0	0	0	0	0	0	0	0	0	0	0	0	0	0

Bit position:	15	14	13	12	11	10	9	8	7	6	5	4	3	2	1	0
Bit field:	CFIGCV[2:0]			CFIM	CFITR	CFITSS	—	CFM	—	CFPLS[2:0]			—	CFTXIE	CFRXIE	CFE
Value after reset:	0	0	0	0	0	0	0	0	0	0	0	0	0	0	0	0

Bit	Symbol	Function	R/W
0	CFE	Common FIFO Enable 0: FIFO disabled 1: FIFO enabled	R/W
1	CFRXIE	Common FIFO RX Interrupt Enable 0: FIFO interrupt generation disabled for Frame RX 1: FIFO interrupt generation enabled for Frame RX	R/W
2	CFTXIE	Common FIFO TX Interrupt Enable 0: FIFO interrupt generation disabled for Frame TX 1: FIFO interrupt generation enabled for Frame TX	R/W
3	—	This bit is read as 0. The write value should be 0.	R/W
6:4	CFPLS[2:0]*1	Common FIFO Payload Data Size Configuration 0 0 0: 8 bytes 0 0 1: 12 bytes 0 1 0: 16 bytes 0 1 1: 20 bytes 1 0 0: 24 bytes 1 0 1: 32 bytes 1 1 0: 48 bytes 1 1 1: 64 bytes	R/W
7	—	This bit is read as 0. The write value should be 0.	R/W
8	CFM	Common FIFO Mode 0: RX FIFO mode 1: TX FIFO mode	R/W
9	—	This bit is read as 0. The write value should be 0.	R/W
10	CFITSS	Common FIFO Interval Timer Source Select 0: Reference clock (× 1 / × 10 period) 1: Bit time clock of related channel (FIFO is linked to fixed channel)	R/W
11	CFITR	Common FIFO Interval Timer Resolution 0: Reference clock period × 1 1: Reference clock period × 10	R/W

Bit	Symbol	Function	R/W
12	CFIM	Common FIFO Interrupt Mode 0: RX FIFO mode: RX interrupt generated when Common FIFO counter reaches CFIGCV value from a lower value TX FIFO mode: TX interrupt generated when Common FIFO transmits the last message successfully 1: RX FIFO mode: RX interrupt generated at the end of every received message storage TX FIFO mode: interrupt generated for every successfully transmitted message	R/W
15:13	CFIGCV[2:0]	Common FIFO Interrupt Generation Counter Value 0 0 0: Interrupt generated when FIFO is 1/8th full 0 0 1: Interrupt generated when FIFO is 1/4th full 0 1 0: Interrupt generated when FIFO is 3/8th full 0 1 1: Interrupt generated when FIFO is 1/2 full 1 0 0: Interrupt generated when FIFO is 5/8th full 1 0 1: Interrupt generated when FIFO is 3/4th full 1 1 0: Interrupt generated when FIFO is 7/8th full 1 1 1: Interrupt generated when FIFO is full	R/W
17:16	CFTML[1:0]	Common FIFO TX Message Buffer Link Transmission scan link position of the corresponding channel	R/W
20:18	—	These bits are read as 0. The write value should be 0.	R/W
23:21	CFDC[2:0]	Common FIFO Depth Configuration 0 0 0: FIFO Depth = 0 message 0 0 1: FIFO Depth = 4 messages 0 1 0: FIFO Depth = 8 messages 0 1 1: FIFO Depth = 16 messages 1 0 0: FIFO Depth = 32 messages 1 0 1: FIFO Depth = 48 messages 1 1 0: FIFO Depth = Reserved 1 1 1: FIFO Depth = Reserved	R/W
31:24	CFITT[7:0]	Common FIFO Interval Transmission Time Delay the start of transmission from the FIFO if configured in TX mode, delay is a multiple of basic Interval Timer Clock Source unit	R/W

Note 1. These bits are not available in the classical CAN function.

CFE bit (Common FIFO Enable)

The CFE bit enables the FIFO when set. FIFO is disabled when this bit is cleared.

This bit can also be used, by clearing it, to abort transmission from Common FIFO when configured in TX mode, or to stop reception into the Common FIFO in RX mode.

Only write to this bit when the CANFD module is in GL_HALT or GL_OPERATION mode and the related CANFD channel is not in CH_RESET mode for FIFOs configured as TX FIFO.

This bit can only be set if the configured FIFO depth is greater than 0x000 (CFDCFCC.CFDC > 0x000) and less than 0x110 (0x110 > CFDCFCC.CFDC > 0x000).

Set the CFE bit with a separate write access to the CFDCFCC register, after all the other bits in this register are set.

This bit is cleared automatically when the CANFD module is in GL_RESET mode.

This bit is also cleared automatically when the related channel is in CH_RESET mode if the FIFO is configured in TX mode.

CFRXIE bit (Common FIFO RX Interrupt Enable)

The CFRXIE bit enables generation of FIFO interrupts when the interrupt flag is set after reception of a frame in the corresponding FIFO buffer.

Do not write to this bit when the CANFD module is in GL_SLEEP mode.

CFTXIE bit (Common FIFO TX Interrupt Enable)

The CFTXIE bit enables generation of common FIFO interrupts when the interrupt flag is set after transmission of a frame from the corresponding FIFO buffer.

Do not write to this bit when the CANFD module is in GL_SLEEP mode.

CFPLS[2:0] bits (Common FIFO Payload Data Size Configuration)

The CFPLS[2:0] bits define the message data payload allocation in the RAM. This is the maximum number of bytes which can be received or transmitted by the FIFO buffer.

For details, see section 29.6. FIFO Buffers and Normal Message Buffer Configuration.

Only write to this bit when the CANFD module is in GL_RESET mode.

Note: These bits are not available in the classical CAN function.

CFM bit (Common FIFO Mode)

The CFM bit selects the mode of the FIFO. When a hardware reset is applied, all the Common FIFO buffers are configured in RX FIFO mode.

Do not write to these bits in GL_OPERATION or GL_SLEEP mode.

Only write to these bits when the CANFD module is in GL_RESET mode.

CFITSS bit (Common FIFO Interval Timer Source Select)

The CFITSS bit selects the basic clock source for the Interval Transmission Timer.

Do not write to this bit when the CANFD module is in GL_SLEEP mode. In addition, do not write to this bit when the CFE bit is set to 1.

Do not write 1 to this bit when CANFD communication is used.[*1]

Note: The bit time clock can vary depending on the nominal and data rate bit configuration.

Note 1. This feature is not available in the classical CAN function.

CFITR bit (Common FIFO Interval Timer Resolution)

The CFITR bit selects the resolution of the reference clock for the Interval Transmission Timer (peripheral clock is the source for the reference clock).

Do not write to this bit when the CANFD module is in GL_SLEEP mode. Also, do not write to this bit when the CFE bit is set to 1.

CFIM bit (Common FIFO Interrupt Mode)

The CFIM bit selects the interrupt generation condition for the FIFO buffer.

Do not write to this bit in GL_SLEEP mode.

Only write to this bit when the CANFD module is in GL_RESET mode.

CFIGCV[2:0] bits (Common FIFO Interrupt Generation Counter Value)

The CFIGCV[2:0] bits select the message counter value for the generation of FIFO interrupts. These values represent fractions of the FIFO depth at which the interrupt is to be generated.

Do not write to these bits when the CANFD module is in GL_SLEEP mode.

The setting of these bits should be synchronized with the CFDC[2:0] bits.

Only write to these bits when the CANFD module is in GL_RESET mode.

CFTML[1:0] bits (Common FIFO TX Message Buffer Link)

The CFTML[1:0] bits select the normal transmit message buffer position where the TX FIFO is linked to, for transmission scanning.

Do not write to these bits in GL_OPERATION or GL_SLEEP mode.

Only write to this bit when the CANFD module is in GL_RESET mode.

CFDC[2:0] bits (Common FIFO Depth Configuration)

The CFDC[2:0] bits select the depth of the common FIFO in terms of the number of messages. If the FIFO depth is configured to 0 message, the FIFO cannot be used.

Only write to these bits when the CANFD module is in GL_RESET mode.

CFITT[7:0] bits (Common FIFO Interval Transmission Time)

The CFITT[7:0] bits select the delay in the start of transmission for all messages transmitted from this FIFO buffer when configured in TX mode. The delay is a multiple of the basic interval timer clock source period (reference clock × 1, reference clock × 10, or bit time clock of the related CAN channel).

Do not write to these bits when the CANFD module is in GL_SLEEP mode.

Do not write to these bits when the CFE bit is set to 1.

When CFDGCFG.ITRCP[15:0] = 0x0000, set the CFITT[7:0] bits to 0x0000.

29.2.29 CFDCFSTS : Common FIFO Status Register

Base address: CANFD = 0x400B_0000

Offset address: 0x0058

Bit position:	31	30	29	28	27	26	25	24	23	22	21	20	19	18	17	16
Bit field:	—	—	—	—	—	—	—	—	—	—	—	—	—	—	—	—
Value after reset:	0	0	0	0	0	0	0	0	0	0	0	0	0	0	0	0

Bit position:	15	14	13	12	11	10	9	8	7	6	5	4	3	2	1	0
Bit field:	—	—	CFMC[5:0]						—	—	—	CFTXIF	CFRXIF	CFMLT	CFFLL	CFEMP
Value after reset:	0	0	0	0	0	0	0	0	0	0	0	0	0	0	0	1

Bit	Symbol	Function	R/W
0	CFEMP	Common FIFO Empty 0: FIFO not empty 1: FIFO empty	R
1	CFFLL	Common FIFO Full 0: FIFO not full 1: FIFO full	R
2	CFMLT	Common FIFO Message Lost 0: Number of message lost in FIFO 1: FIFO message lost	R/W
3	CFRXIF	Common RX FIFO Interrupt Flag 0: FIFO interrupt condition not satisfied after frame reception 1: FIFO interrupt condition satisfied after frame reception	R/W
4	CFTXIF	Common TX FIFO Interrupt Flag 0: FIFO interrupt condition not satisfied after frame transmission 1: FIFO Interrupt condition satisfied after frame transmission	R/W
7:5	—	These bits are read as 0. The write value should be 0.	R/W
13:8	CFMC[5:0]	Common FIFO Message Count Number of messages stored in FIFO	R
31:14	—	These bits are read as 0. The write value should be 0.	R/W

CFEMP bit (Common FIFO Empty)

The CFEMP bit is set automatically when:

- The CPU has read all messages from the FIFO configured in RX mode
- All messages have been transmitted from the FIFO configured in TX mode
- The FIFO is disabled by setting the CFE bit to 0
- The CANFD module is in GL_RESET mode
- The related CANFD channel is in CH_RESET when FIFO configured in TX mode.

The CFEMP bit is cleared automatically when:

- The first reception message is stored in the FIFO buffer when configured in RX mode
- The first message to be transmitted is stored in the FIFO buffer when configured in TX mode.

CFFLL bit (Common FIFO Full)

The CFFLL bit is set automatically when the number of CAN messages stored in the FIFO matches the configured FIFO depth.

The CFFLL bit is cleared automatically when:

- The number of CAN messages stored in the FIFO is less than the configured FIFO depth
- The FIFO is disabled by setting the CFE bit to 0
- The CANFD module is in GL_RESET mode
- The related CANFD channel is in CH_RESET mode when FIFO buffer is configured in TX mode.

CFMLT bit (Common FIFO Message Lost)

The CFMLT bit is set automatically whenever a message is lost due to attempted storage of a new message when FIFO is already full in RX mode.

If a set from the CAN channel occurs simultaneously with a clear by a write access, then this bit is set.

Only write to this bit when the CANFD module is in GL_HALT or GL_OPERATION mode and the related CANFD channel is not in CH_RESET mode for FIFO configured as TX FIFO. Writing 1 has no effect.

Do not use the bit clear instruction to clear this bit. Use the MOV instruction to ensure that only the specified bit is cleared. Other bits remain 1.

The CFMLT bit is cleared:

- By writing 0 to it
- When the CANFD module is in GL_RESET mode
- When the related CANFD channel is in CH_RESET mode if the FIFO buffer is configured in TX mode.

CFRXIF bit (Common RX FIFO Interrupt Flag)

The CFRXIF bit is not cleared automatically if the Common FIFO buffer is disabled.

Only write to this bit when the CANFD module is in GL_HALT or GL_OPERATION mode and the related CANFD channel is not in CH_RESET mode for FIFO configured as TX FIFO. Writing 1 has no effect.

Do not use the bit clear instruction to clear this bit. Use the MOV instruction to ensure that only the specified bit is cleared. Other bits remain 1.

This bit is set automatically when the configured interrupt condition is satisfied for Common FIFO buffers when configured in RX mode.

If the set from the CAN channel occurs simultaneously with the clear by the write access, then the bit is set.

The CFRXIF bit is cleared:

- By writing 0 to it
- When the CANFD module is in GL_RESET mode

CFTXIF bit (Common TX FIFO Interrupt Flag)

The CFTXIF bit is not cleared automatically if the Common FIFO buffer is disabled.

Only write to this bit when the CANFD module is in GL_HALT or GL_OPERATION mode and the related CANFD channel is not in CH_RESET mode for FIFO buffer configured as TX FIFO. Writing 1 has no effect.

Do not use the bit clear instruction to clear this bit. Use the MOV instruction to ensure that only the specified bit is cleared. Other bits remain 1.

This bit is set automatically when the configured interrupt condition is satisfied for Common FIFO buffers configured in TX mode.

If the set from the CAN channel occurs simultaneously with the clear by the write access, then the bit is set.

The CFTXIF bit is cleared:

- By writing 0 to it
- When the CANFD module is in GL_RESET mode
- When the related CANFD channel is in CH_RESET mode if the FIFO buffer is configured in TX mode.

CFMC[5:0] bits (Common FIFO Message Count)

The CFMC[5:0] bits indicate the following:

- Number of CAN messages stored by the CPU in the FIFO buffer configured in TX mode pending for transmission
- Number of CAN messages stored in the FIFO buffer configured in RX mode by CANFD module to be read by the CPU

The CFMC[5:0] bits are cleared automatically when:

- The FIFO is disabled
- The CANFD module is in GL_RESET mode
- The related CANFD channel is in CH_RESET mode if the FIFO buffer is configured in TX mode.

29.2.30 CFDCFPCTR : Common FIFO Pointer Control Register

Base address: CANFD = 0x400B_0000

Offset address: 0x005C

Bit position:	31																															7						0
Bit field:	—	—	—	—	—	—	—	—	—	—	—	—	—	—	—	—	—	—	—	—	—	—	—	—	—	CFPC[7:0]												
Value after reset:	0	0	0	0	0	0	0	0	0	0	0	0	0	0	0	0	0	0	0	0	0	0	0	0	0	0	0	0	0	0	0	0	0	0	0	0	0	0

Bit	Symbol	Function	R/W
7:0	CFPC[7:0]	Common FIFO Pointer Control Increments read or write pointer of the corresponding Common FIFO buffers depending on the mode configuration.	W
31:8	—	The write value should be 0.	W

The Common FIFO Pointer Control Registers can be used to increment the read or write pointer of the corresponding Common FIFO buffer.

CFPC[7:0] bits (Common FIFO Pointer Control)

When the value 0xFF is written into the CFPC[7:0] bits, the read pointer of the corresponding Common FIFO buffer (when configured in RX mode), or the write pointer of the corresponding Common FIFO buffer (when configured in TX mode) moves to the next FIFO entry.

The read value from these bits is always 0x00.

Only write to these bits when the CANFD module is in GL_HALT or GL_OPERATION mode.

Only write 0xFF to this register when:

- The Common FIFO buffer is enabled and is not empty if configured in RX mode
- The Common FIFO buffer is enabled and is not full if configured in TX mode

Do not write to the Common FIFO Pointer Control registers when DMA is enabled.

29.2.31 CFDFESTS : FIFO Empty Status Register

Base address: CANFD = 0x400B_0000

Offset address: 0x0060

Bit position:	31	30	29	28	27	26	25	24	23	22	21	20	19	18	17	16
Bit field:	—	—	—	—	—	—	—	—	—	—	—	—	—	—	—	—
Value after reset:	0	0	0	0	0	0	0	0	0	0	0	0	0	0	0	0

Bit position:	15	14	13	12	11	10	9	8	7	6	5	4	3	2	1	0
Bit field:	—	—	—	—	—	—	—	CFEMP	—	—	—	—	—	—	RFXEMP[1:0]	
Value after reset:	0	0	0	0	0	0	0	1	0	0	0	0	0	0	1	1

Bit	Symbol	Function	R/W
1:0	RFXEMP[1:0]	RX FIFO Empty Status 0: Corresponding FIFO not empty 1: Corresponding FIFO empty	R
7:2	—	These bits are read as 0.	R
8	CFEMP	Common FIFO Empty Status 0: Corresponding FIFO not empty 1: Corresponding FIFO empty	R
31:9	—	These bits are read as 0.	R

The FIFO Empty Status register shows status of the empty bits of the FIFO buffers.

RFXEMP[1:0] bits (RX FIFO Empty Status)

The RFXEMP[1:0] bits are set when the CANFD module is in GL_RESET mode.

Each bit is set automatically when the corresponding bit is set in the RX FIFO Status Registers.

Each bit is cleared automatically when the corresponding bit is cleared in the RX FIFO Status Registers.

CFEMP bit (Common FIFO Empty Status)

The CFEMP bits are set when the CANFD module is in GL_RESET mode.

Each bit is set automatically when the corresponding bit is set in the Common FIFO Status Registers.

Each bit is cleared automatically when the corresponding bit is cleared in the Common FIFO Status Registers.

29.2.32 CFDFFSTS : FIFO Full Status Register

Base address: CANFD = 0x400B_0000

Offset address: 0x0064

Bit position:	31	30	29	28	27	26	25	24	23	22	21	20	19	18	17	16
Bit field:	—	—	—	—	—	—	—	—	—	—	—	—	—	—	—	—
Value after reset:	0	0	0	0	0	0	0	0	0	0	0	0	0	0	0	0

Bit position:	15	14	13	12	11	10	9	8	7	6	5	4	3	2	1	0
Bit field:	—	—	—	—	—	—	—	CFFLL	—	—	—	—	—	—	RFXFLL[1:0]	
Value after reset:	0	0	0	0	0	0	0	0	0	0	0	0	0	0	0	0

Bit	Symbol	Function	R/W
1:0	RFXFLL[1:0]	RX FIF0 Full Status 0: Corresponding FIFO not full 1: Corresponding FIFO full	R
7:2	—	These bits are read as 0.	R
8	CFFLL	Common FIF0 Full Status 0: Corresponding FIFO not full 1: Corresponding FIFO full	R
31:9	—	These bits are read as 0.	R

The FIFO Full Status Register shows status of the full bits of the FIFO buffers.

RFXFLL[1:0] bits (RX FIF0 Full Status)

The RFXFLL[1:0] bits are cleared when CANFD module is in GL_RESET mode.

Each bit is set automatically when the corresponding bit is set in the RX FIFO Status Registers.

Each bit is cleared automatically when the corresponding bit is cleared in the RX FIFO Status Registers.

CFFLL bits (Common FIF0 Full Status)

The CFFLL bits are cleared when the CANFD module is in GL_RESET mode.

Each bit is set automatically when the corresponding bit is set in the Common FIFO Status Registers.

Each bit is cleared automatically when the corresponding bit is cleared in the Common FIFO Status Registers.

29.2.33 CFDFMSTS : FIFO Message Lost Status Register

Base address: CANFD = 0x400B_0000

Offset address: 0x0068

Bit position:	31	30	29	28	27	26	25	24	23	22	21	20	19	18	17	16
Bit field:	—	—	—	—	—	—	—	—	—	—	—	—	—	—	—	—
Value after reset:	0	0	0	0	0	0	0	0	0	0	0	0	0	0	0	0

Bit position:	15	14	13	12	11	10	9	8	7	6	5	4	3	2	1	0
Bit field:	—	—	—	—	—	—	—	CFMLT	—	—	—	—	—	—	RFXMLT[1:0]	
Value after reset:	0	0	0	0	0	0	0	0	0	0	0	0	0	0	0	0

Bit	Symbol	Function	R/W
1:0	RFXMLT[1:0]	RX FIFO Message Lost Status 0: Corresponding FIFO Message Lost flag not set 1: Corresponding FIFO Message Lost flag set	R
7:2	—	These bits are read as 0.	R
8	CFMLT	Common FIFO Message Lost Status 0: Corresponding FIFO Message Lost flag not set 1: Corresponding FIFO Message Lost flag set	R
31:9	—	These bits are read as 0.	R

The FIFO Message Lost Status Register shows status of the Msg Lost bits of the FIFO buffers.

RFXMLT[1:0] bits (RX FIFO Message Lost Status)

The RFXMLT[1:0] bits are cleared when the CANFD module is in GL_RESET mode.

Each bit is set automatically when the corresponding bit is set in the RX FIFO Status Registers.

Each bit is cleared automatically when the corresponding bit is cleared in the RX FIFO Status Registers.

CFMLT bits (Common FIFO Message Lost Status)

The CFMLT bits are cleared when the CANFD module is in GL_RESET mode.

Each bit is set automatically when the corresponding bit is set in the Common FIFO Status Registers.

Each bit is cleared automatically when the corresponding bit is cleared in the Common FIFO Status Registers.

29.2.34 CFDRFISTS : RX FIFO Interrupt Flag Status Register

Base address: CANFD = 0x400B_0000

Offset address: 0x006C

Bit position:	31	30	29	28	27	26	25	24	23	22	21	20	19	18	17	16
Bit field:	—	—	—	—	—	—	—	—	—	—	—	—	—	—	—	—
Value after reset:	0	0	0	0	0	0	0	0	0	0	0	0	0	0	0	0

Bit position:	15	14	13	12	11	10	9	8	7	6	5	4	3	2	1	0
Bit field:	—	—	—	—	—	—	—	—	—	—	—	—	—	—	RFXIF[1:0]	
Value after reset:	0	0	0	0	0	0	0	0	0	0	0	0	0	0	0	0

Bit	Symbol	Function	R/W
1:0	RFXIF[1:0]	RX FIFO[x] Interrupt Flag Status 0: Corresponding RX FIFO Interrupt flag not set 1: Corresponding RX FIFO Interrupt flag set	R
31:2	—	These bits are read as 0.	R

The FIFO Interrupt Flag Status Register shows status of the interrupt flag bits of the RX FIFO buffers.

RFXIF[1:0] bits (RX FIFO[x] Interrupt Flag Status)

Each bit is set automatically when the corresponding interrupt flag bit is set in the RX FIFO Status Registers.

The RFXIF[1:0] bits are cleared when the CANFD module is in GL_RESET mode.

Each bit is cleared automatically when the corresponding interrupt flag bit is cleared in the RX FIFO Status Registers.

29.2.35 CFDCDTCT : DMA Transfer Control Register

Base address: CANFD = 0x400B_0000

Offset address: 0x00C8

Bit position:	31	30	29	28	27	26	25	24	23	22	21	20	19	18	17	16
Bit field:	—	—	—	—	—	—	—	—	—	—	—	—	—	—	—	—
Value after reset:	0	0	0	0	0	0	0	0	0	0	0	0	0	0	0	0

Bit position:	15	14	13	12	11	10	9	8	7	6	5	4	3	2	1	0
Bit field:	—	—	—	—	—	—	—	CFDMAE	—	—	—	—	—	—	RFDMAE1	RFDMAE0
Value after reset:	0	0	0	0	0	0	0	0	0	0	0	0	0	0	0	0

Bit	Symbol	Function	R/W
0	RFDMAE0	DMA Transfer Enable for RXFIFO 0 0: DMA transfer request disabled 1: DMA transfer request enabled	R/W
1	RFDMAE1	DMA Transfer Enable for RXFIFO 1 0: DMA transfer request disabled 1: DMA transfer request enabled	R/W

Bit	Symbol	Function	R/W
7:2	—	These bits are read as 0. The write value should be 0.	R/W
8	CFDMAE	DMA Transfer Enable for Common FIFO 0 0: DMA transfer request disabled 1: DMA transfer request enabled	R/W
31:9	—	These bits are read as 0. The write value should be 0.	R/W

The DMA Transfer Control Register controls the start and stop of DMA transfer operation.

RFDMAEe (e = 0 to 1) bit (DMA Transfer Enable for RXFIFO e)

The RFDMAEe bit cannot be set in GL_SLEEP or GL_RESET mode.

This bit is cleared when the CANFD module is in GL_RESET mode.

CFDMAE bit (DMA Transfer Enable for Common FIFO)

The CFDMAE bit enables or disables DMA transfer request for common FIFO

The CFDMAE bit cannot be set in GL_SLEEP or GL_RESET mode.

Do not enable a DMA transfer for a Common FIFO that is configured as TX FIFO.

This bit is cleared when the CANFD module is in GL_RESET mode.

29.2.36 CFDCDTSTS : DMA Transfer Status Register

Base address: CANFD = 0x400B_0000

Offset address: 0x00CC

Bit position:	31	30	29	28	27	26	25	24	23	22	21	20	19	18	17	16
Bit field:	—	—	—	—	—	—	—	—	—	—	—	—	—	—	—	—
Value after reset:	0	0	0	0	0	0	0	0	0	0	0	0	0	0	0	0

Bit position:	15	14	13	12	11	10	9	8	7	6	5	4	3	2	1	0
Bit field:	—	—	—	—	—	—	—	CFDM ASTS	—	—	—	—	—	—	RFDM ASTS1	RFDM ASTS0
Value after reset:	0	0	0	0	0	0	0	0	0	0	0	0	0	0	0	0

Bit	Symbol	Function	R/W
0	RFDMASTS0	DMA Transfer Status for RX FIFO 0 0: DMA transfer stopped 1: DMA transfer on going	R
1	RFDMASTS1	DMA Transfer Status for RX FIFO 1 0: DMA transfer stopped 1: DMA transfer on going	R
7:2	—	These bits are read as 0.	R
8	CFDMASTS	DMA Transfer Status only for Common FIFO 0: DMA transfer stopped 1: DMA transfer on going	R
31:9	—	These bits are read as 0.	R

The DMA Transfer Status Register shows the status of the DMA transfer.

RFDMASTSe (e = 0 to 1) bit (DMA Transfer Status for RX FIFO e)

Each bit is set automatically when the corresponding DMA enable bit is set and the corresponding DMA FIFO is not empty.

Each bit is cleared automatically when the DMA transfer stops either because the DMA is disabled or the DMA FIFO is empty.

When CFDCDTCT.RFDMAEe (see CFDCDTCT.RFDMAEe bit in section 29.2.35. CFDCDTCT : DMA Transfer Control Register) is set to 0 while DMA transfer for the corresponding FIFO is on going, the RFDMASTSe bit becomes 0 when the DMA transfer is complete.

This bit is cleared when the CANFD module is in GL_RESET mode.

CFDMASTS bit (DMA Transfer Status only for Common FIFO)

Each bit is set automatically when the corresponding DMA enable bit is set and the corresponding DMA FIFO is not empty.

Each bit is cleared automatically when the DMA transfer stops either because the DMA is disabled or the DMA FIFO is empty.

When CFDCDTCT.CFDMAE (see CFDCDTCT.CFDMAE bit in section 29.2.35. CFDCDTCT : DMA Transfer Control Register) is set to 0 while DMA transfer for the corresponding FIFO is on going, the CFDMASTS bit becomes 0 when the DMA transfer is complete.

This bit is cleared when the CANFD module is in GL_RESET mode.

29.2.37 CFDTMCi : TX Message Buffer Control Registers i (i = 0 to 3)

Base address: CANFD = 0x400B_0000

Offset address: 0x0070 + 0x01 × i

Bit position:	7	6	5	4	3	2	1	0
Bit field:	—	—	—	—	—	TMOM	TMTAR	TMTR
Value after reset:	0	0	0	0	0	0	0	0

Bit	Symbol	Function	R/W
0	TMTR	TX Message Buffer Transmission Request 0: TX Message buffer transmission not requested 1: TX message buffer transmission requested	R/W
1	TMTAR	TX Message Buffer Transmission Abort Request 0: TX message buffer transmission request abort not requested 1: TX message buffer transmission request abort requested	R/W
2	TMOM	TX Message Buffer One-shot Mode 0: TX message buffer not configured in one-shot mode 1: TX message buffer configured in one-shot mode	R/W
7:3	—	These bits are read as 0. The write value should be 0.	R/W

The TX Message Buffer Control Registers configure the TX message buffer functions.

TMTR bit (TX Message Buffer Transmission Request)

When the TMTR bit is set, the CANFD module logic tries to transmit the message stored in the corresponding message buffer.

Only write to this bit when the related CANFD module is in CH_HALT or CH_OPERATION mode.

Do not set this bit if the corresponding TX message buffer is linked to a COM FIFO in TX mode or is a part of TX Queue.

This bit cannot be directly cleared by a CPU write access.

This bit can only be set when the Transmission Result flag bits (CFDTMSTSj.TMTRF) in the CFDTMSTSj register corresponding to the message buffer are cleared to 00b.

The TMTR bit is automatically cleared by the:

- CANFD module logic at the end of a successful transmission
- CANFD module logic at the end of a transmission abort, requested by the corresponding CFDTMCi.TMTAR bit
- CANFD module logic when there is a detection of a CAN bus error or arbitration loss if CFDTMCi.TMOM bit is set for the message buffer
- CANFD module logic when the CANFD module is in GL_RESET mode or the related channel is in CH_RESET mode.

TMTAR bit (TX Message Buffer Transmission Abort Request)

When the TMTAR bit is set, the CANFD module logic tries to abort the transmission of the frame stored in the corresponding message buffer.

In most cases, transmission cannot be aborted if the internal scan for transmission is complete and the message buffer has already been selected for transmission. In this case, frame may be transmitted successfully from the message buffer. The message buffer selection is released by entering CH_HALT mode.

However, message buffer selected for transmission can be aborted by an abort request when the CAN node detects a new message on the bus (RX pin) before it starts transmission from the selected message buffer.

Only write to the TMTAR bit when the related CANFD channel is in CH_HALT or CH_OPERATION mode. This bit can only be set when the related transmit request TMTR bit is set.

The TMTAR bit cannot be cleared by a CPU write access. Clearing of this bit by CANFD has priority over setting by a CPU write access.

The TMTAR bit is automatically cleared by:

- The CANFD module logic at the end of a successful transmission
- The CANFD module logic at the end of a transmission abort
- The CANFD module logic when there is detection of a CAN bus error or arbitration loss
- The CANFD module logic when the CANFD module is in GL_RESET mode or the related channel enters CH_RESET mode.

TMOM bit (TX Message Buffer One-shot Mode)

When the TMOM bit is set, the CANFD module logic tries to transmit the message only once.

If the transmission is successful, the CFDTMSTSj.TMTRF bits are set to 10b or 11b. Otherwise, the transmission is automatically aborted and CFDTMSTSj.TMTRF bits are set to 01b due to a bus error or a bus arbitration lost.

The TMOM bit remains set if the transmission has completed successfully or aborted due to an error or a loss of arbitration.

Only write to this bit when the related CANFD channel is in CH_HALT or CH_OPERATION mode.

Set this bit at the same time as the TMTR bit. Clear this bit with a write access.

If a message has already been requested for transmission, do not write to this bit until the message has been successfully transmitted or transmission has been aborted.

The TMOM bit is automatically cleared by the CANFD module logic when the CANFD module is in GL_RESET mode or the related channel is in CH_RESET mode.

29.2.38 CFDTMSTSj : TX Message Buffer Status Registers j (j = 0 to 3)

Base address: CANFD = 0x400B_0000

Offset address: 0x0074 + 0x01 × j

Bit position:	7	6	5	4	3	2	1	0
Bit field:	—	—	—	TMTARM	TMTRM	TMTRF[1:0]		TMTSTS
Value after reset:	0	0	0	0	0	0	0	0

Bit	Symbol	Function	R/W
0	TMTSTS	TX Message Buffer Transmission Status 0: No on-going transmission 1: On-going transmission	R

Bit	Symbol	Function	R/W
2:1	TMTRF[1:0]	TX Message Buffer Transmission Result Flag 0 0: No result 0 1: Transmission aborted from the TX message buffer 1 0: Transmission successful from the TX message buffer and transmission abort was not requested 1 1: Transmission successful from the TX message buffer and transmission abort was requested	R/W
3	TMTRM	TX Message Buffer Transmission Request Mirrored 0: TX message buffer transmission not requested 1: TX message buffer transmission requested	R
4	TMTARM	TX Message Buffer Transmission Abort Request Mirrored 0: TX message buffer transmission request abort not requested 1: TX message buffer transmission request abort requested	R
7:5	—	These bits are read as 0. The write value should be 0.	R/W

The TX Message Buffer Status Registers show status of the transmission and transmission abort for the corresponding message buffers.

TMTSTS bit (TX Message Buffer Transmission Status)

The TMTSTS bit is set automatically at the start of the transmission from the corresponding TX message buffer.

This bit is cleared automatically when:

- Transmission stops
- The CANFD module is in GL_RESET mode
- The related CANFD channel is in CH_RESET mode.

TMTRF[1:0] bits (TX Message Buffer Transmission Result Flag)

The TMTRF[1:0] bits show the result for the corresponding TX message buffer. The status is as follows:

- 00: Transmission in progress or has not been requested
- 01: Transmission has been aborted from the corresponding TX message buffer
- 10: Transmission was successful from the corresponding TX message buffer and the CFDTMCi.TMTAR bit was not set for this TX message buffer
- 11: Transmission was successful from the corresponding TX message buffer, but the CFDTMCi.TMTAR bit was set for this TX message buffer.

Only write to these bits when the related CANFD channel is in CH_HALT or CH_OPERATION mode.

The TMTRF[1:0] bits are cleared automatically when the CANFD module is in GL_RESET mode or the related channel is in CH_RESET mode.

If the set from the CAN channel occurs simultaneously with the clear by the write access, then the bit is set.

TMTRM bit (TX Message Buffer Transmission Request Mirrored)

The TMTRM bit is set when the CFDTMCi.TMTR bit in the corresponding CFDTMCi register is set.

This bit is cleared when the CFDTMCi.TMTR bit in the corresponding CFDTMCi register is cleared.

TMTARM bit (TX Message Buffer Transmission Abort Request Mirrored)

The TMTARM bit is set when the CFDTMCi.TMTAR bit in the corresponding CFDTMCi register is set.

This bit is cleared when the CFDTMCi.TMTAR bit in the corresponding CFDTMCi register is cleared.

29.2.39 CFDTMTRSTS : TX Message Buffer Transmission Request Status Register

Base address: CANFD = 0x400B_0000

Offset address: 0x0078

Bit position:	31																													3	2	1	0
Bit field:	—	—	—	—	—	—	—	—	—	—	—	—	—	—	—	—	—	—	—	—	—	—	—	—	—	—	—	—	—	CFDTMTRSTS3	CFDTMTRSTS2	CFDTMTRSTS1	CFDTMTRSTS0
Value after reset:	0	0	0	0	0	0	0	0	0	0	0	0	0	0	0	0	0	0	0	0	0	0	0	0	0	0	0	0	0	0	0	0	0

Bit	Symbol	Function	R/W
3:0	CFDTMTRSTS3 to CFDTMTRSTS0	TX Message Buffer n Transmission Request Status (n = 0 to 3) 0: Transmission not requested 1: Transmission requested	R
31:4	—	These bits are read as 0.	R

These bits show the TX Message Buffer Transmission Request Status for the corresponding TX Message Buffer.

CFDTMTRSTSn bits (TX Message Buffer n Transmission Request Status (n = 0 to 3))

The CFDTMTRSTSn bits show status of the CFDTMCi.TMTR bits of the TX Message Buffer Control Registers.

Each bit is set automatically when the corresponding bit is set in the TX Message Buffer Control Registers (CFDTMCi), and only when the message buffer does not belong to a TX Queue.

Each bit is cleared automatically when:

- The corresponding bit is cleared in the TX Message Buffer Control Registers
- The CANFD module is in GL_RESET mode
- The related CANFD channel is in CH_RESET mode.

29.2.40 CFDTMTARSTS : TX Message Buffer Transmission Abort Request Status Register

Base address: CANFD = 0x400B_0000

Offset address: 0x007C

Bit position:	31																													3	2	1	0
Bit field:	—	—	—	—	—	—	—	—	—	—	—	—	—	—	—	—	—	—	—	—	—	—	—	—	—	—	—	—	—	CFDTMTARSTS3	CFDTMTARSTS2	CFDTMTARSTS1	CFDTMTARSTS0
Value after reset:	0	0	0	0	0	0	0	0	0	0	0	0	0	0	0	0	0	0	0	0	0	0	0	0	0	0	0	0	0	0	0	0	0

Bit	Symbol	Function	R/W
3:0	CFDTMTARSTS3 to CFDTMTARSTS0	TX Message Buffer n Transmission Abort Request Status (n = 0 to 3) 0: Transmission abort not requested 1: Transmission abort requested	R
31:4	—	These bits are read as 0.	R

These bits show the TX Message Buffer Transmission Abort Request Status for the corresponding TX Message Buffer.

CFDTMTARSTSn bits (TX Message Buffer n Transmission Abort Request Status (n = 0 to 3))

The CFDTMTARSTSn bits show status of the CFDTMCi.TMTAR bits of the TX Message Buffer Control Registers.

Each bit is set automatically when the corresponding bit is set in the TX Message Buffer Control Registers, and when the message buffer belongs to a TX Queue.

Each bit is cleared automatically when:

- The corresponding bit is cleared in the TX Message Buffer Control Registers

- The CANFD module is in GL_RESET mode
- The related CANFD channel is in CH_RESET mode.

29.2.41 CFDTMTCSTS : TX Message Buffer Transmission Completion Status Register

Base address: CANFD = 0x400B_0000

Offset address: 0x0080

Bit position:	31																													3	2	1	0
Bit field:	—	—	—	—	—	—	—	—	—	—	—	—	—	—	—	—	—	—	—	—	—	—	—	—	—	—	—	—	—	CFDTMTCSTS3	CFDTMTCSTS2	CFDTMTCSTS1	CFDTMTCSTS0
Value after reset:	0	0	0	0	0	0	0	0	0	0	0	0	0	0	0	0	0	0	0	0	0	0	0	0	0	0	0	0	0	0	0	0	0

Bit	Symbol	Function	R/W
3:0	CFDTMTCSTS3 to CFDTMTCSTS0	TX Message Buffer n Transmission Completion Status (n = 0 to 3) 0: Transmission not completed 1: Transmission completed	R
31:4	—	These bits are read as 0.	R

These bits show the TX Message Buffer Transmission Completion Status for the corresponding TX Message Buffer.

CFDTMTCSTSn bits (TX Message Buffer n Transmission Completion Status (n = 0 to 3))

The CFDTMTCSTSn bits show status of successful completion of the TX Message Buffer Status Registers.

Each bit is set automatically when the corresponding bit is set in the TX Message Buffer Status Registers.

Each bit is cleared automatically when:

- The corresponding bit is cleared in the TX Message Buffer Status Registers
- The CANFD module is in GL_RESET mode
- The related CANFD channel is in CH_RESET mode.

If a CAN channel enters CH_RESET mode, then the bits related to that channel are cleared.

29.2.42 CFDTMTASTS : TX Message Buffer Transmission Abort Status Register

Base address: CANFD = 0x400B_0000

Offset address: 0x0084

Bit position:	31																													3	2	1	0
Bit field:	—	—	—	—	—	—	—	—	—	—	—	—	—	—	—	—	—	—	—	—	—	—	—	—	—	—	—	—	—	CFDTMTASTS3	CFDTMTASTS2	CFDTMTASTS1	CFDTMTASTS0
Value after reset:	0	0	0	0	0	0	0	0	0	0	0	0	0	0	0	0	0	0	0	0	0	0	0	0	0	0	0	0	0	0	0	0	0

Bit	Symbol	Function	R/W
3:0	CFDTMTASTS3 to CFDTMTASTS0	TX Message Buffer n Transmission Abort Status (n = 0 to 3) 0: Transmission not aborted 1: Transmission aborted	R
31:4	—	These bits are read as 0.	R

These bits show the TX Message Buffer Transmission abort Status for the corresponding TX Message Buffer.

CFDTMTASTSn bits (TX Message Buffer n Transmission Abort Status (n = 0 to 3))

The CFDTMTASTSn bits show status of the successful transmission abort of the corresponding TX message buffer.

Each bit is set automatically when the CFDTMSTSj.TMTRF bits are set to 01b in the corresponding TX Message Buffer Status Register.

Each bit is cleared automatically when:

- The CFDTMSTSj.TMTRF bits are cleared in the corresponding TX Message Buffer Status Register
- The CANFD module is in GL_RESET mode
- The related CANFD channel is in CH_RESET mode.

29.2.43 CFDTMIEC : TX Message Buffer Interrupt Enable Configuration Register

Base address: CANFD = 0x400B_0000

Offset address: 0x0088

Bit position:	31																													3	2	1	0
Bit field:	—	—	—	—	—	—	—	—	—	—	—	—	—	—	—	—	—	—	—	—	—	—	—	—	—	—	—	—	—	TMIE3	TMIE2	TMIE1	TMIE0
Value after reset:	0	0	0	0	0	0	0	0	0	0	0	0	0	0	0	0	0	0	0	0	0	0	0	0	0	0	0	0	0	0	0	0	0

Bit	Symbol	Function	R/W
3:0	TMIE3 to TMIE0	TX Message Buffer n Interrupt Enable (n = 0 to 3) 0: TX message buffer interrupt disabled 1: TX message buffer interrupt enabled	R/W
31:4	—	These bits are read as 0. The write value should be 0.	R/W

These bits show the TX Message Buffer Interrupt Enable for the corresponding TX Message Buffer.

TMIEn bits (TX Message Buffer n Interrupt Enable (n = 0 to 3))

If the TMIEn bits are set, an interrupt is generated at the end of a successful transmission from the corresponding message buffer.

See section 29.7. Interrupts and DMA for TX Message Buffer Interrupt specification.

Do not write to the TMIEn bits when:

- The CANFD module is in GL_SLEEP mode
- The related CANFD channel is in CH_SLEEP mode
- The corresponding TX message buffer is linked to a Common FIFO with the CFDCFCC.CFTML bits.

29.2.44 CFDTXQCC : TX Queue Configuration/Control Register

Base address: CANFD = 0x400B_0000

Offset address: 0x008C

Bit position:	31	30	29	28	27	26	25	24	23	22	21	20	19	18	17	16
Bit field:	—	—	—	—	—	—	—	—	—	—	—	—	—	—	—	—
Value after reset:	0	0	0	0	0	0	0	0	0	0	0	0	0	0	0	0

Bit position:	15	14	13	12	11	10	9	8	7	6	5	4	3	2	1	0
Bit field:	—	—	—	—	—	—	TXQDC[1:0]		TXQIM	—	TXQT XIE	—	—	—	—	TXQE
Value after reset:	0	0	0	0	0	0	0	0	0	0	0	0	0	0	0	0

Bit	Symbol	Function	R/W
0	TXQE	TX Queue Enable 0: TX Queue disabled 1: TX Queue enabled	R/W
4:1	—	These bits are read as 0. The write value should be 0.	R/W

Bit	Symbol	Function	R/W
5	TXQTXIE	TX Queue TX Interrupt Enable 0: TX Queue TX interrupt disabled 1: TX Queue TX interrupt enabled	R/W
6	—	This bit is read as 0. The write value should be 0.	R/W
7	TXQIM	TX Queue Interrupt Mode 0: When the last message is successfully transmitted 1: At every successful transmission	R/W
9:8	TXQDC[1:0]	TX Queue Depth Configuration 0x00: 0 messages 0x01: Reserved 0x10: 3 messages 0x11: 4 messages	R/W
31:10	—	These bits are read as 0. The write value should be 0.	R/W

The TX Queue Configuration/Control Registers are used to configure the TX Queue transmission.

TXQ is composed of TXMB0 to TXMB3 (at the maximum) when TXQE is enabled.

TXQE bit (TX Queue Enable)

The TXQE bit cannot be set if the configured TX Queue depth is 0x00 (CFDTXQCC.TXQDC = 0x00).

You cannot write to this bit when the CANFD module is in GL_SLEEP mode.

Do not write to this bit when the related CANFD channel is in CH_RESET or CH_SLEEP mode.

The TXQE bit is cleared automatically when the related CANFD channel is in CH_RESET mode.

TXQTXIE bit (TX Queue TX Interrupt Enable)

When the TXQTXIE bit is set, an interrupt is generated based on the setting of the TXQIM bit.

You cannot write to this bit when the CANFD module is in GL_SLEEP mode.

Do not write to this bit when the related CANFD channel is in CH_SLEEP mode.

TXQIM bit (TX Queue Interrupt Mode)

The TXQIM bit selects the interrupt generation condition for the TX Queue.

You cannot write to this bit when the CANFD module is in GL_SLEEP mode.

Do not write to this bit when the related CANFD channel is in any of the following modes:

- CH_SLEEP
- CH_HALT
- CH_OPERATION.

TXQDC[1:0] bits (TX Queue Depth Configuration)

The TXQDC[1:0] bits select the depth of the transmission queue. The message buffer selection starts from MB[0] up to MB[3] depending on the configured depth.

You cannot write to this bit when the CANFD module is in GL_SLEEP mode.

Do not write to this bit when the related CANFD channel is in any of the following modes:

- CH_SLEEP
- CH_HALT
- CH_OPERATION.

29.2.45 CFDTXQSTS : TX Queue Status Register

Base address: CANFD = 0x400B_0000

Offset address: 0x0090

Bit position:	31	30	29	28	27	26	25	24	23	22	21	20	19	18	17	16
Bit field:	—	—	—	—	—	—	—	—	—	—	—	—	—	—	—	—
Value after reset:	0	0	0	0	0	0	0	0	0	0	0	0	0	0	0	0

Bit position:	15	14	13	12	11	10	9	8	7	6	5	4	3	2	1	0
Bit field:	—	—	—	—	—	TXQMC[2:0]			—	—	—	—	—	TXQTXIF	TXQFLL	TXQEMP
Value after reset:	0	0	0	0	0	0	0	0	0	0	0	0	0	0	0	1

Bit	Symbol	Function	R/W
0	TXQEMP	TX Queue Empty 0: TX Queue not empty 1: TX Queue empty	R
1	TXQFLL	TX Queue Full 0: TX Queue not full 1: TX Queue full	R
2	TXQTXIF	TX Queue TX Interrupt Flag 0: TX Queue interrupt condition not satisfied after a frame TX 1: TX Queue interrupt condition satisfied after a frame TX	R/W
7:3	—	These bits are read as 0. The write value should be 0.	R/W
10:8	TXQMC[2:0]	TX Queue Message Count Number of messages in the TX Queue.	R
31:11	—	These bits are read as 0. The write value should be 0.	R/W

The TX Queue Status Registers show the status of the TX Queue of corresponding CAN channel.

TXQEMP bit (TX Queue Empty)

The TXQEMP bit is set automatically when the TX Queue is disabled or no messages are stored in the TX Queue.

This bit is set automatically when:

- The last message is transmitted from the TX Queue
- The related CANFD channel is in CH_RESET mode.

The bit is cleared automatically when the first message to be transmitted is stored in the TX Queue.

TXQFLL bit (TX Queue Full)

The TXQFLL bit is set automatically when the number of CAN messages stored in the TX Queue matches the configured TX Queue depth.

This bit is cleared automatically when:

- The number of CAN messages stored in the TX Queue is less than the configured TX Queue depth
- The related CANFD channel is in CH_RESET mode.

TXQTXIF bit (TX Queue TX Interrupt Flag)

The TXQTXIF bit is not cleared automatically if the TX Queue is disabled.

When stopping the TX Queue, this bit should be cleared, after disabling TXQE and checking an empty state of TX Queue.

Do not use the bit clear instruction to clear this bit. Use the MOV instruction to ensure that only the specified bit is cleared. Other bits remain 1. Writing 1 has no effect.

This bit is set automatically when the configured interrupt condition is satisfied for the TX Queue.

If the set from the CAN channel occurs simultaneously with the clear by the write access, then the bit is set.

You cannot write to this bit when the related CANFD channel is in CH_SLEEP or CH_RESET mode.

The bit is cleared:

- By writing 0 to it
- When the related CANFD channel is in CH_RESET mode.

TXQMC[2:0][13:8] bits (TX Queue Message Count)

The TXQMC[2:0] bits show the number of CAN messages in the TX Queue.

These bits are cleared automatically when the related CANFD channel is in CH_RESET mode.

29.2.46 CFDTXQPCTR : TX Queue Pointer Control Register

Base address: CANFD = 0x400B_0000

Offset address: 0x0094

Bit position:	31																								7							0
Bit field:	—	—	—	—	—	—	—	—	—	—	—	—	—	—	—	—	—	—	—	—	—	—	—	—	TXQPC[7:0]							
Value after reset:	0	0	0	0	0	0	0	0	0	0	0	0	0	0	0	0	0	0	0	0	0	0	0	0	0	0	0	0	0	0	0	0

Bit	Symbol	Function	R/W
7:0	TXQPC[7:0]	TX Queue Pointer Control Increments the write pointer to the TX Queue buffer in the corresponding channel	W
31:8	—	The write value should be 0.	W

The TX Queue Pointer Control Registers are used to confirm storage of a full message in the corresponding TX Queue buffers.

TXQPC[7:0] bits (TX Queue Pointer Control)

When the value 0xFF is written to the TXQPC[7:0] bits, the write pointer of the corresponding TX Queue buffer is updated and a transmit request is initiated for this message.

The read value from these bits is always 0x00. Do not write to the FIFO control registers when DMA is enabled.

You cannot write to these bits when the related CANFD channel is in CH_SLEEP or CH_RESET mode.

Only write 0xFF to this register when:

- The corresponding TX Queue is enabled and not full
- The Common FIFO is enabled.

29.2.47 CFDTHLCC : TX History List Configuration/Control Register

Base address: CANFD = 0x400B_0000

Offset address: 0x0098

Bit position:	31	30	29	28	27	26	25	24	23	22	21	20	19	18	17	16
Bit field:	—	—	—	—	—	—	—	—	—	—	—	—	—	—	—	—
Value after reset:	0	0	0	0	0	0	0	0	0	0	0	0	0	0	0	0

Bit position:	15	14	13	12	11	10	9	8	7	6	5	4	3	2	1	0
Bit field:	—	—	—	—	—	THLDTE	THLIM	THLIE	—	—	—	—	—	—	—	THLE
Value after reset:	0	0	0	0	0	0	0	0	0	0	0	0	0	0	0	0

Bit	Symbol	Function	R/W
0	THLE	TX History List Enable 0: TX History List disabled 1: TX History List enabled	R/W
7:1	—	These bits are read as 0. The write value should be 0.	R/W
8	THLIE	TX History List Interrupt Enable 0: TX History List Interrupt disabled 1: TX History List Interrupt enabled	R/W
9	THLIM	TX History List Interrupt Mode 0: Interrupt generated if TX History List level reaches ¾ of the TX History List depth 1: Interrupt generated for every successfully stored entry	R/W
10	THLDTE	TX History List Dedicated TX Enable 0: TX FIFO + TX Queue 1: Flat TX MB + TX FIFO + TX Queue	R/W
31:11	—	These bits are read as 0. The write value should be 0.	R/W

The TX History List Configuration/Control Register configures the TX History List functions.

THLE bit (TX History List Enable)

The THLE bit enables the TX History List buffer when it is set.

You cannot write to this bit when the related CANFD channel is in CH_RESET or CH_SLEEP mode.

This bit is cleared automatically when the related CANFD channel is in CH_RESET mode.

THLIE bit (TX History List Interrupt Enable)

The THLIE bit enables the generation of the TX History List interrupt when it is set.

You cannot write to this bit when the CANFD module is in GL_SLEEP mode.

THLIM bit (TX History List Interrupt Mode)

The THLIM bit selects the interrupt generation condition for the FIFO.

You cannot write to this bit when the CANFD module is in GL_SLEEP mode.

Do not write to this bit when the CANFD module is in GL_HALT or GL_OPERATION mode.

THLDTE bit (TX History List Dedicated TX Enable)

The THLDTE bit selects the condition for storing an entry in the TX History List after successful transmission.

You cannot write to this bit when the CANFD module is in GL_SLEEP mode.

Do not write to this bit when the CANFD module is in GL_HALT or GL_OPERATION mode.

29.2.48 CFDTHLSTS : TX History List Status Register

Base address: CANFD = 0x400B_0000

Offset address: 0x009C

Bit position:	31	30	29	28	27	26	25	24	23	22	21	20	19	18	17	16
Bit field:	—	—	—	—	—	—	—	—	—	—	—	—	—	—	—	—
Value after reset:	0	0	0	0	0	0	0	0	0	0	0	0	0	0	0	0

Bit position:	15	14	13	12	11	10	9	8	7	6	5	4	3	2	1	0
Bit field:	—	—	—	—	THLMC[3:0]				—	—	—	—	THLIF	THLELT	THLFLL	THLEMP
Value after reset:	0	0	0	0	0	0	0	0	0	0	0	0	0	0	0	1

Bit	Symbol	Function	R/W
0	THLEMP	TX History List Empty 0: TX History List not empty 1: TX History List empty	R
1	THLFLL	TX History List Full 0: TX History List not full 1: TX History List full	R
2	THLELT	TX History List Entry Lost 0: No entry lost in TX History List 1: TX History List entry Lost	R/W
3	THLIF	TX History List Interrupt Flag 0: TX History List interrupt condition not satisfied 1: TX History List interrupt condition satisfied	R/W
7:4	—	These bits are read as 0. The write value should be 0.	R/W
11:8	THLMC[3:0]	TX History List Message Count Number of messages stored in TX History List	R
31:12	—	These bits are read as 0. The write value should be 0.	R/W

The TX History List Status register shows the status of data stored in the TX History List buffer.

THLEMP bit (TX History List Empty)

The THLEMP bit is set automatically when the CPU has read all the entries from the TX History List buffer.

This bit is cleared automatically when the first entry is stored to the TX History List.

This bit is set automatically when:

- TX History List is disabled
- The related CANFD channel is in CH_RESET mode.

THLFLL bit (TX History List Full)

The THLFLL bit is set automatically when the number of entries in the TX History List buffer matches the TX History List depth.

Each TX History List can store up to 8 entries.

This bit is cleared automatically when:

- The number of entries in the TX History List buffer is less than the TX History List depth
- The TX History List is disabled
- The related CANFD channel is in CH_RESET mode.

THLELT bit (TX History List Entry Lost)

The THLELT bit is set when a new entry cannot be stored because the related TX History List buffer is already full.

Only write to this bit when the related CANFD channel is in CH_HALT or CH_OPERATION mode. Writing 1 has no effect.

Do not use the bit clear instruction to clear this bit. Use the MOV instruction to ensure that only the specified bit is cleared. Other bits remain 1.

If the set from the CAN channel occurs simultaneously with the clear by the write access, then the bit is set.

This bit is cleared:

- By writing 0 to it
- When the related CANFD channel is in CH_RESET mode.

THLIF bit (TX History List Interrupt Flag)

The THLIF bit is set when the configured interrupt condition is satisfied.

Only write to this bit when the related CANFD channel is in CH_HALT or CH_OPERATION mode. Writing 1 has no effect.

Do not use the bit clear instruction to clear this bit. Use the MOV instruction to ensure that only the specified bit is cleared. Other bits remain 1.

If the set from the CAN channel occurs simultaneously with the clear by the write access, then the bit is set.

This bit is cleared:

- By writing 0 to it
- When the related CANFD channel is in CH_RESET mode.

The bit is cleared by writing 0 to it.

This bit is automatically cleared in CH_RESET mode.

THLMC[3:0] bits (TX History List Message Count)

The THLMC[3:0] bits show the number of transmitted messages stored in the TX History List.

These bits are cleared automatically when the related CANFD channel is in CH_RESET mode.

29.2.49 CFDTHLACC0 : TX History List Access Register 0

Base address: CANFD = 0x400B_0000

Offset address: 0x0740

Bit position:	31	30	29	28	27	26	25	24	23	22	21	20	19	18	17	16
Bit field:	TMTS[15:0]															
Value after reset:	0	0	0	0	0	0	0	0	0	0	0	0	0	0	0	0

Bit position:	15	14	13	12	11	10	9	8	7	6	5	4	3	2	1	0
Bit field:	—	—	—	—	—	—	—	—	—	—	—	BN[1:0]		BT[2:0]		
Value after reset:	0	0	0	0	0	0	0	0	0	0	0	0	0	0	0	0

Bit	Symbol	Function	R/W
2:0	BT[2:0]	Buffer Type 0 0 1: Flat TX message buffer 0 1 0: TX FIFO message buffer number 1 0 0: TX Queue message buffer number	R
4:3	BN[1:0]	Buffer Number Number of the message buffer	R
15:5	—	These bits are read as 0.	R
31:16	TMTS[15:0]	Transmit Timestamp Transmit timestamp value for software drivers	R

The TX History List Access Registers 0 provide access to the entry in the TX History List based on the read timestamp value.

BT[2:0] bits (Buffer Type)

The BT[2:0] bits indicate whether data has been stored following a transmission from a FIFO buffer, a TX Queue or a TX message buffer.

BN[1:0] bits (Buffer Number)

The BN[1:0] bits show the message buffer from which transmission was successfully completed. If a message from a Common FIFO is transmitted, then these bits show the message buffer that is linked to the Common FIFO for transmission.

TMTS[15:0] bits (Transmit Timestamp)

The TMTS[15:0] bits indicate the timestamp for use by software drivers.

29.2.50 CFDTHLACC1 : TX History List Access Register 1

Base address: CANFD = 0x400B_0000

Offset address: 0x0744

Bit position:	31	30	29	28	27	26	25	24	23	22	21	20	19	18	17	16
Bit field:	—	—	—	—	—	—	—	—	—	—	—	—	—	—	TIFL[1:0]	
Value after reset:	0	0	0	0	0	0	0	0	0	0	0	0	0	0	0	0

Bit position:	15	14	13	12	11	10	9	8	7	6	5	4	3	2	1	0
Bit field:	TID[15:0]															
Value after reset:	0	0	0	0	0	0	0	0	0	0	0	0	0	0	0	0

Bit	Symbol	Function	R/W
15:0	TID[15:0]	Transmit ID These bits indicate that message buffer reference ID, TX FIFO reference ID, or AFL pointer field is stored for software drivers.	R
17:16	TIFL[1:0]	Transmit Information Label These bits indicate that message buffer information label, TX FIFO information label, or AFL information label is stored for software drivers.	R
31:18	—	These bits are read as 0.	R

The TX History List Access Registers 1 provide access to entry in the TX History List based on the read pointer value.

TID[15:0] bits (Transmit ID)

The TID[15:0] bits indicate whether the message buffer reference ID (CFDTMFDCTRb.TMPTR) or the TX FIFO reference ID (CFDCFFDCSTS.CFPTR) is for use by software drivers.

TIFL[1:0] bits (Transmit Information Label)

The TIFL[1:0] bits indicate whether the message buffer information label (CFDTMFDCTRb.TMIFL) or the TX FIFO information label (CFDCFFDCSTS.CFIFL) is for use by software drivers.

29.2.51 CFDTHLPCTR : TX History List Pointer Control Register

Base address: CANFD = 0x400B_0000

Offset address: 0x00A0

Bit position:	31																															7						0
Bit field:	—	—	—	—	—	—	—	—	—	—	—	—	—	—	—	—	—	—	—	—	—	—	—	—	—	—	THLPC[7:0]											
Value after reset:	0	0	0	0	0	0	0	0	0	0	0	0	0	0	0	0	0	0	0	0	0	0	0	0	0	0	0	0	0	0	0	0	0	0	0	0	0	0

Bit	Symbol	Function	R/W
7:0	THLPC[7:0]	TX History List Pointer Control Increments the write pointer to the TX History List in the corresponding channel	W
31:8	—	The write value should be 0.	W

The TX History List Pointer Control Registers are used to increment the read pointer of the TX History List.

THLPC[7:0] bits (TX History List Pointer Control)

When 0xFF is written to the THLPC[7:0] bits, the read pointer of the TX History List is moved to the next TX History List entry address.

The read value from these bits is always 0x00. Only write to these bits when the related CANFD channel is in CH_HALT or CH_OPERATION mode.

Only write 0xFF to these registers when the corresponding TX History List is enabled and not empty.

29.2.52 CFDGRSTC : Global SW reset Register

Base address: CANFD = 0x400B_0000

Offset address: 0x00D8

Bit position:	31	30	29	28	27	26	25	24	23	22	21	20	19	18	17	16
Bit field:	—	—	—	—	—	—	—	—	—	—	—	—	—	—	—	—
Value after reset:	0	0	0	0	0	0	0	0	0	0	0	0	0	0	0	0

Bit position:	15	14	13	12	11	10	9	8	7	6	5	4	3	2	1	0
Bit field:	KEY[7:0]								—	—	—	—	—	—	—	SRST
Value after reset:	0	0	0	0	0	0	0	0	0	0	0	0	0	0	0	0

Bit	Symbol	Function	R/W
0	SRST	SW Reset 0: Normal state 1: SW reset state	R/W
7:1	—	These bits are read as 0. The write value should be 0.	R/W
15:8	KEY[7:0]	Key Code These bits control the validity of rewriting of a SRST bit.	W
31:16	—	These bits are read as 0. The write value should be 0.	R/W

SRST bit (SW Reset)

When the SRST bit is set, the CANFD module is in the same state as hardware reset. When a reset is required, write 1 then write 0 to this bit.

This bit is cleared when the CANFD module is in GL_SLEEP mode.

When this bit is cleared, the RAM initialization sequence does not operate. The configuration of RAM is performed by software.

The RAM is not initialized when software reset is performed during the initialization of RAM. Software must perform the initialization of RAM.

KEY[7:0] bits (Key Code)

When 0xC4 is written in the KEY[15:8] bits, a write to the SRST bit is valid.

The read value from these bits is always 0x00.

CFDGRSTC.SRST bit and the CFDGRSTC.KEY bit should be written simultaneously.

29.2.53 CFDGTSTCFG : Global Test Configuration Register

Base address: CANFD = 0x400B_0000

Offset address: 0x00A8

Bit position:	31	30	29	28	27	26	25	24	23	22	21	20	19	18	17	16
Bit field:	—	—	—	—	—	—	—	—	—	—	—	—	RTMPS[3:0]			
Value after reset:	0	0	0	0	0	0	0	0	0	0	0	0	0	0	0	0

Bit position:	15	14	13	12	11	10	9	8	7	6	5	4	3	2	1	0
Bit field:	—	—	—	—	—	—	—	—	—	—	—	—	—	—	—	—
Value after reset:	0	0	0	0	0	0	0	0	0	0	0	0	0	0	0	0

Bit	Symbol	Function	R/W
15:0	—	These bits are read as 0. The write value should be 0.	R/W
19:16	RTMPS[3:0]	RAM Test Mode Page Select Select a RAM test mode page	R/W
31:20	—	These bits are read as 0. The write value should be 0.	R/W

The Global Test Configuration Register is used to configure the RAM test mode page.

RTMPS[3:0] bits (RAM Test Mode Page Select)

The RTMPS[3:0] bits select the RAM page mode for CPU read/write access when the CANFD module is configured in RAM test mode.

See section 29.9.2.1. RAM Test Mode for the RAM test mode specification.

Do not write to these bits when the CANFD module is in GL_RESET or GL_SLEEP mode.

Only enter values from 0 to 8 (0x008) for the message buffer RAM.

Only write to these bits when the CANFD module is in GL_HALT mode.

These bits are cleared automatically when the related CANFD channel is in GL_RESET mode.

29.2.54 CFDGTSTCTR : Global Test Control Register

Base address: CANFD = 0x400B_0000

Offset address: 0x00AC

Bit position:	31	30	29	28	27	26	25	24	23	22	21	20	19	18	17	16
Bit field:	—	—	—	—	—	—	—	—	—	—	—	—	—	—	—	—
Value after reset:	0	0	0	0	0	0	0	0	0	0	0	0	0	0	0	0

Bit position:	15	14	13	12	11	10	9	8	7	6	5	4	3	2	1	0
Bit field:	—	—	—	—	—	—	—	—	—	—	—	—	—	RTME	—	—
Value after reset:	0	0	0	0	0	0	0	0	0	0	0	0	0	0	0	0

Bit	Symbol	Function	R/W
1:0	—	These bits are read as 0. The write value should be 0.	R/W
2	RTME	RAM Test Mode Enable 0: RAM test mode disabled 1: RAM test mode enabled	R/W
31:3	—	These bits are read as 0. The write value should be 0.	R/W

The Global Test Control register is used to control the global test modes of the CANFD module.

RTME bit (RAM Test Mode Enable)

When the RTME bit is set, the CANFD module is configured in RAM test mode. See section 29.9.2.1. RAM Test Mode for RAM test mode specification.

Only write to this bit when the CANFD module is in GL_HALT mode.

Clear this bit when the CANFD module is in GL_HALT mode.

This bit is cleared automatically when the CANFD module is in GL_RESET mode.

29.2.55 CFDGFDCFG : Global FD Configuration Register

Base address: CANFD = 0x400B_0000

Offset address: 0x00B0

Bit position:	31	30	29	28	27	26	25	24	23	22	21	20	19	18	17	16
Bit field:	—	—	—	—	—	—	—	—	—	—	—	—	—	—	—	—
Value after reset:	0	0	0	0	0	0	0	0	0	0	0	0	0	0	0	0

Bit position:	15	14	13	12	11	10	9	8	7	6	5	4	3	2	1	0
Bit field:	—	—	—	—	—	—	TSCCFG[1:0]		—	—	—	—	—	—	—	RPED
Value after reset:	0	0	0	0	0	0	0	0	0	0	0	0	0	0	0	0

Bit	Symbol	Function	R/W
0	RPED	RES Bit Protocol Exception Disable 0: Protocol exception event detection enabled 1: Protocol exception event detection disabled	R/W
7:1	—	These bits are read as 0. The write value should be 0.	R/W
9:8	TSCCFG[1:0]	Timestamp Capture Configuration 0 0: Timestamp capture at the sample point of SOF (start of frame) 0 1: Timestamp capture at frame valid indication 1 0: Timestamp capture at the sample point of RES bit 1 1: Reserved	R/W
31:10	—	These bits are read as 0. The write value should be 0.	R/W

RPED bit (RES Bit Protocol Exception Disable)

The RPED bit configures the protocol exception event handling according to ISO 11898-1.

When this bit is enabled, the protocol exception event detection is disabled, and the protocol controller transmits an error frame when the protocol exception event is detected (RES bit is sampled recessive).

Only write to this bit when the CANFD module is in GL_RESET mode.

TSCCFG[1:0] bits (Timestamp Capture Configuration)

The TSCCFG[1:0] bits configure the different capture points of the timestamp for transmission and reception.

When CFDGFDCFG.TSCCFG[1:0] = 10b, the timestamp capture is performed for CANFD frames at RES bit and for Classical frames at the start of frame.

Only write to these bits when the CANFD module is in GL_RESET mode.

29.2.56 CFDGLOCKK : Global Lock Key Register

Base address: CANFD = 0x400B_0000

Offset address: 0x00B8

Bit position:	31																15															0
Bit field:	—	—	—	—	—	—	—	—	—	—	—	—	—	—	—	—	LOCK[15:0]															
Value after reset:	0	0	0	0	0	0	0	0	0	0	0	0	0	0	0	0	0	0	0	0	0	0	0	0	0	0	0	0	0	0	0	0

Bit	Symbol	Function	R/W
15:0	LOCK[15:0]	Lock Key Key bits for unlocking the protection of test modes	W
31:16	—	The write value should be 0.	W

The Global Lock Key register is a write-only register that is used to unlock the protection for special test bits.

See section 29.9.2. Global Test Modes for Lock key specification.

LOCK[15:0] bits (Lock Key)

The unlock key sequence must be written in the LOCK[15:0] bits to configure the CANFD module in FIFO OTB disable and RAM test modes.

The read value from these bits is always 0x0000.

You cannot write to these bits when the CANFD module is in GL_SLEEP or GL_RESET mode.

Do not write to these bits when the CANFD module is in GL_OPERATION mode.

29.2.57 CFDRPGACCk : RAM Test Page Access Registers k (k = 0 to 63)

Base address: CANFD = 0x400B_0000

Offset address: 0x0280 + 0x0004 × k

Bit position:	31																															0
Bit field:	RDTA[31:0]																															
Value after reset:	0	0	0	0	0	0	0	0	0	0	0	0	0	0	0	0	0	0	0	0	0	0	0	0	0	0	0	0	0	0	0	0

Bit	Symbol	Function	R/W
31:0	RDTA[31:0]	RAM Data Test Access RAM data bytes	R/W

RDTA[31:0] bits (RAM Data Test Access)

Data can be read from or written into the RDTA[31:0] bits when the CANFD module is configured in RAM test mode.

Only write to this bit when the CANFD module is in GL_HALT mode and RAM test mode is enabled.

Software data should be read/written in the RAM Test Page Access registers during RAM test mode.

29.2.58 CFDGAFLIGNENT : Global AFL Ignore Entry Register

Base address: CANFD = 0x400B_0000

Offset address: 0x00C0

Bit position:	31																													3		0
Bit field:	—	—	—	—	—	—	—	—	—	—	—	—	—	—	—	—	—	—	—	—	—	—	—	—	—	—	—	—	—	IRN[3:0]		
Value after reset:	0	0	0	0	0	0	0	0	0	0	0	0	0	0	0	0	0	0	0	0	0	0	0	0	0	0	0	0	0	0	0	0

Bit	Symbol	Function	R/W
3:0	IRN[3:0]	Ignore Rule Number Define rule number which ignores an AFL entry.	R/W
31:4	—	These bits are read as 0. The write value should be 0.	R/W

IRN[3:0] bits (Ignore Rule Number)

The IRN[3:0] bits define the rule number which updates an AFL entry.

Enter only values between 0 and 15 (0x0F) inclusive.

Only write to these bits when the CFDGAFLIGNCTR.IREN bit is 0.

You cannot write to these bits when the CANFD module is in GL_SLEEP mode.

29.2.59 CFDGAFLIGNCTR : Global AFL Ignore Control Register

Base address: CANFD = 0x400B_0000

Offset address: 0x00C4

Bit position:	31	30	29	28	27	26	25	24	23	22	21	20	19	18	17	16
Bit field:	—	—	—	—	—	—	—	—	—	—	—	—	—	—	—	—
Value after reset:	0	0	0	0	0	0	0	0	0	0	0	0	0	0	0	0

Bit position:	15	14	13	12	11	10	9	8	7	6	5	4	3	2	1	0
Bit field:	KEY[7:0]								—	—	—	—	—	—	—	IREN
Value after reset:	0	0	0	0	0	0	0	0	0	0	0	0	0	0	0	0

Bit	Symbol	Function	R/W
0	IREN	Ignore Rule Enable 0: AFL entry number is not ignored 1: AFL entry number is ignored	R/W
7:1	—	These bits are read as 0. The write value should be 0.	R/W
15:8	KEY[7:0]	Key Code These bits control the validity of rewriting the IREN bit.	W
31:16	—	These bits are read as 0. The write value should be 0.	R/W

IREN bit (Ignore Rule Enable)

When the IREN bit is set, the entry number (selected by CFDGAFLIGNENT register) is ignored.

This bit is cleared automatically when the CANFD module is in GL_RESET mode.

KEY[7:0] bits (Key Code)

When 0xC4 is written in the KEY[7:0] bits, a write to the IREN bit is valid.

The read value from these bits is always 0x00.

CFDGAFLIGNCTR.IREN bit and the CFDGAFLIGNCTR.KEY bit should be written simultaneously

29.2.60 CFDRMIEC : RX Message Buffer Interrupt Enable Configuration Register

Base address: CANFD = 0x400B_0000

Offset address: 0x0038

Bit position:	15	14	13	12	11	10	9	8	7	6	5	4	3	2	1	0
Bit field:	RMIE[15:0]															
Value after reset:	0	0	0	0	0	0	0	0	0	0	0	0	0	0	0	0

Bit	Symbol	Function	R/W
15:0	RMIE[15:0]	RX Message Buffer Interrupt Enable 0: RX Message Buffer Interrupt disabled for corresponding RX message buffer 1: RX Message Buffer Interrupt enabled for corresponding RX message buffer	R/W

These bits show the RX Message Buffer Interrupt Enable for the corresponding RX Message Buffer. CFDRMIEC bit 0 corresponds to RX Message Buffer 0 and so on.

The bit position of CFDRMIEC corresponds to the buffer number of RXMB.

RMIE[15:0] bits (RX Message Buffer Interrupt Enable)

If this bit is set, then an interrupt will be generated at the end of a successful reception from the corresponding Message Buffer.

For details, see section 29.7.1. Interrupts.

Users cannot write to this bit when the CANFD module is in GL_SLEEP mode.

29.2.61 Identifier Bits Alignment

Standard Identifier (11 bits) format: ID28 – ID18 is aligned to b10 to b0, b11 to b28 should be 0.

Extended Identifier (29 bits) format: ID28 – ID0 is aligned to b28 – b0

Table 29.4 Standard Identifier (11-bit format)

b31	b30	b29	b28	b27	b26	b25	b24	b23	b22	b21	b20	b19	b18	b17	b16
IDE = 0	RTR	—	0	0	0	0	0	0	0	0	0	0	0	0	0
b15	b14	b13	b12	b11	b10	b9	b8	b7	b6	b5	b4	b3	b2	b1	b0
0	0	0	0	0	ID28	ID27	ID26	ID25	ID24	ID23	ID22	ID21	ID20	ID19	ID18

Table 29.5 Extended Identifier (29-bit format)

b31	b30	b29	b28	b27	b26	b25	b24	b23	b22	b21	b20	b19	b18	b17	b16
IDE = 1	RTR	—	ID28	ID27	ID26	ID25	ID24	ID23	ID22	ID21	ID20	ID19	ID18	ID17	ID16
b15	b14	b13	b12	b11	b10	b9	b8	b7	b6	b5	b4	b3	b2	b1	b0
ID15	ID14	ID13	ID12	ID11	ID10	ID9	ID8	ID7	ID6	ID5	ID4	ID3	ID2	ID1	ID0

29.2.62 Message Buffer Component Structure

29.2.62.1 Start Addresses

The start address for each of the Message Buffer component is calculated using the number of related Message Buffer components.

The start addresses for each register in the Message Buffer component are depicted in Table 29.6.

Table 29.6 Message Buffer Component Register Start Addresses (1 of 2)

b = Message buffer component index	MBCP	p	Register	Start Address
[0…15] b = [0…7]	RMBCPb[0]	x	RMID	0x0920 + b × 0x004C
		x	RMPTR	0x0924 + b × 0x004C
		x	RMFDSTS b	0x0928 + b × 0x004C
		[1…15]	RMDFbp	0x092C + b × 0x004C + p × 0x0004
[0…15] b = [8…15]	RMBCPb[0]	x	RMIDb	0x0D20 + (b-8) × 0x004C
		x	RMPTRb	0x0D24 + (b-8) × 0x004C
		x	RMFDSTS b	0x0D28 + (b-8) × 0x004C
		[1…15]	RMDFbp	0x0D2C + (b-8) × 0x004C + p × 0x0004
[0…1]	RFMBCPb[0]	x	RFIDb	0x0520 + b × 0x004C
		x	RFPTRb	0x0524 + b × 0x004C
		x	RFFDSTS b	0x0528 + b × 0x004C
		[1…15]	RFDFbp	0x052C + b × 0x004C + p × 0x0004

Table 29.6 Message Buffer Component Register Start Addresses (2 of 2)

b = Message buffer component index	MBCP	p	Register	Start Address
[0]	CFMBCPb[0]	x	CFID	0x05B8
		x	CFPTR0	0x05BC
		x	CFFDCSTS0	0x05C0
		[1…15]	CFDFp0	0x05C4 + p × 0x0004
[0…3]	TMBCPb[0]	x	TMIDb	0x0604 + b × 0x004C
		x	TMPTRb	0x0608 + b × 0x004C
		x	TMFDCTRb	0x060C + b × 0x004C
		[1…15]	TMDFbp	0x0610 + b × 0x004C + p × 0x0004

The message buffer configuration consists of four types of Message Buffer components:

- RX Message Buffer Component (CFDRMBCPb[0])
- RX FIFO Access Message Buffer Component (CFDRFMBCPb[0])
- Common FIFO Access Message Buffer Component (CFDCFMBCP0[0])
- TX Message Buffer Component (CFDTMBCPb[0]).

Where b = the Message Buffer component index that has a range that varies based on the type of Message Buffer component.

For a summary of this configuration, see Figure 29.28. For a detailed description of the number of and the different types of message buffers, see section 29.6. FIFO Buffers and Normal Message Buffer Configuration.

As described in section 29.2. Register Descriptions, each Message Buffer component consists of the following registers:

- Identifier (ID)
- Pointer (PTR)
- Data Field (DFp).

Where p = the Data Field register index that has a range that varies based on the type of message buffer component.

Rc is the Message Buffer Component register where c = Message Buffer Component register index that has a range that varies based on the type of Message Buffer component.

A description of the registers, their associated bits and their accessibility are shown below the summary and detailed figures of each component.

In each of the figures, a cell that contains '-' means reserved and has the same behavior as reserved bits for registers in section 29.2.62. Message Buffer Component Structure.

29.2.62.2 CFDRMBCPb[0] : RX Message Buffer Component b (b = 0 to 15)

Base address: CANFD = 0x400B_0000

Offset address: See Table 29.6

Bit position:	15	14	13	12	11	10	9	8	7	6	5	4	3	2	1	0
Bit field:	Rc[15:0]															
Value after reset:	0	0	0	0	0	0	0	0	0	0	0	0	0	0	0	0

Bit	Symbol	Function	R/W
15:0	Rc[15:0]	RX Message Buffer Component c Refer to Table 29.7, Table 29.8 and the descriptions that follow for a detailed description of each register and its related bits, contained within this message buffer component.	R/W

Where the total number of CFDRMBCPb = 16 as shown in Figure 29.28 (c = RX Message Buffer Component Register index = [0…18])

Rc[15:0] bit (RX Message Buffer Component c)

The RX Message Buffer Component is made up of the following registers: CFDRMIDb, CFDRMPTRb, CFDRMFDSTSb, and CFDRMDFbp. Refer to Table 29.8 for details of how to interpret the structure of this buffer component and how to access the respective registers.

Table 29.7 RX Message Buffer Component Summary

RX Message Buffer Component (RMBCP)	
Rc	**CANFD mode (CAN_FD_MODE = 1)**
R0	RX Message Buffer (b) ID Registers
R1	RX Message Buffer (b) Pointer Registers
R2	RX Message Buffer (b) CANFD Status Registers
R3	RX Message Buffer (b) Data Field 0 Registers
R4	RX Message Buffer (b) Data Field 1 Registers
R5	RX Message Buffer (b) Data Field 2 Registers
R6	RX Message Buffer (b) Data Field 3 Registers
R7	RX Message Buffer (b) Data Field 4 Registers
R8	RX Message Buffer (b) Data Field 5 Registers
R9	RX Message Buffer (b) Data Field 6 Registers
R10	RX Message Buffer (b) Data Field 7 Registers
R11	RX Message Buffer (b) Data Field 8 Registers
R12	RX Message Buffer (b) Data Field 9 Registers
R13	RX Message Buffer (b) Data Field 10 Registers
R14	RX Message Buffer (b) Data Field 11 Registers
R15	RX Message Buffer (b) Data Field 12 Registers
R16	RX Message Buffer (b) Data Field 13 Registers
R17	RX Message Buffer (b) Data Field 14 Registers
R18	RX Message Buffer (b) Data Field 15 Registers
R[19…31]	—

Table 29.8 RX Message Buffer Component (RMBCP) Detailed

Rc	p	Symbol	31	30	29	28	27	26	25	24	23	22	21	20	19	18	17	16	15	14	13	12	11	10	9	8	7	6	5	4	3	2	1	0
R0	x	CFDRMIDb	RMIDE	RMRTR	—	RMID																												
R1	x	CFDRMPTRb	RMDLC				—	—	—	—	—	—	—	—	—	—	—	—	RMTS															
R2	x	CFDRMFDSTSb	RMPTR																—	—	—	—	—	—	RMIFL		—	—	—	—	—	RMFDF	RMBRS	RMESI
R3	0	CFDRMDFbp	RMDB_HH								RMDB_HL								RMDB_LH								RMDB_LL							
R[4…18]	[1…15]	CFDRMDFbp	RMDB_HH								RMDB_HL								RMDB_LH								RMDB_LL							

29.2.62.3 CFDRMIDb : RX Message Buffer ID Registers (b = 0 to 15)

Base address: CANFD = 0x400B_0000

Offset address: 0x0920 + 0x004C × b (b = 0 to 7)
0x0D20 + 0x004C × (b - 8) (b = 8 to 15)

Bit position:	31	30	29																													0
Bit field:	RMIDE	RMRTR	—	RMID[28:0]																												
Value after reset:	0	0	0	0	0	0	0	0	0	0	0	0	0	0	0	0	0	0	0	0	0	0	0	0	0	0	0	0	0	0	0	0

Bit	Symbol	Function	R/W
28:0	RMID[28:0]	RX Message Buffer ID Field STD-ID/EXT-ID fields	R
29	—	This bit is read as 0.	R
30	RMRTR	RX Message Buffer RTR Bit 0: Data frame 1: Remote frame	R
31	RMIDE	RX Message Buffer IDE Bit 0: STD-ID is stored 1: EXT-ID is stored	R

The RX Message Buffer ID Register b (b = 0 to 15) store the ID field, IDE bit, and RTR bit of the received message.

RMID[28:0] bits (RX Message Buffer ID Field)

The RMID[28:0] are the bits of the STD-ID/EXT-ID fields of the message stored in the RX message buffer.

See section 29.2.62.1. Start Addresses for details on how to interpret the structure of this buffer component.

RMRTR bit (RX Message Buffer RTR Bit)

The RMRTR bit shows whether a data frame or a remote frame was stored in the RX message buffer.

Note: There are no remote frames in CANFD format. When a CANFD frame is received, the register reflects the state of the received value (the RRS bit in FD frame format).

RMIDE bit (RX Message Buffer IDE Bit)

The RMIDE bit shows whether message with Standard Identifier or Extended Identifier was stored in the RX message buffer.

29.2.62.4 CFDRMPTRb : RX Message Buffer Pointer Registers (b = 0 to 15)

Base address: CANFD = 0x400B_0000

Offset address: 0x0924 + 0x004C × b (b = 0 to 7)
0x0D24 + 0x004C × (b - 8) (b = 8 to 15)

Bit position:	31			28													15															0
Bit field:	RMDLC[3:0]				—	—	—	—	—	—	—	—	—	—	—	—	RMTS[15:0]															
Value after reset:	0	0	0	0	0	0	0	0	0	0	0	0	0	0	0	0	0	0	0	0	0	0	0	0	0	0	0	0	0	0	0	0

Bit	Symbol	Function	R/W
15:0	RMTS[15:0]	RX Message Buffer Timestamp Field Timestamp value stored for the message in the RX message buffer	R
27:16	—	These bits are read as 0.	R
31:28	RMDLC[3:0]	RX Message Buffer DLC Field Number of data bytes received in a CAN frame.	R

The RX Message Buffer Pointer Register b (b = 0 to 15) store the DLC and Timestamp fields for the received message.

RMTS[15:0] bits (RX Message Buffer Timestamp Field)

The RMTS[15:0] bits store the timestamp value taken at the capture point as configured by CFDGFDCFG.TSCCFG of the received message.

RMDLC[3:0] bits (RX Message Buffer DLC Field)

The RMDLC[3:0] bits store the number of data bytes that were received in the RX message buffer.

See Table 5 in ISO 11898-1 (2015) Specification for details in defining the number of data bytes that were received.

Note: The maximum capacity of the buffer belongs to CFDRMNB.RMPLS and this is not available in the classical CAN function.

29.2.62.5 CFDRMFDSTSb : RX Message Buffer CANFD Status Registers (b = 0 to 15)

Base address: CANFD = 0x400B_0000

Offset address: 0x0928 + 0x004C × b (b = 0 to 7)
0x0D28 + 0x004C × (b - 8) (b = 8 to 15)

Bit position:	31	30	29	28	27	26	25	24	23	22	21	20	19	18	17	16
Bit field:	RMPTR[15:0]															
Value after reset:	0	0	0	0	0	0	0	0	0	0	0	0	0	0	0	0

Bit position:	15	14	13	12	11	10	9	8	7	6	5	4	3	2	1	0
Bit field:	—	—	—	—	—	—	RMIFL[1:0]		—	—	—	—	—	RMFDF	RMBRS	RMESI
Value after reset:	0	0	0	0	0	0	0	0	0	0	0	0	0	0	0	0

Bit	Symbol	Function	R/W
0	RMESI*1	Error State Indicator bit 0: CANFD frame received from error active node 1: CANFD frame received from error passive node	R
1	RMBRS*1	Bit Rate Switch bit 0: CANFD frame received with no bit rate switch 1: CANFD frame received with bit rate switch	R
2	RMFDF*1	CAN FD Format bit 0: Non CANFD frame received 1: CANFD frame received	R
7:3	—	These bits are read as 0.	R
9:8	RMIFL[1:0]	RX Message Buffer Information Label Field	R
15:10	—	These bits are read as 0.	R
31:16	RMPTR[15:0]	RX Message Buffer Pointer Field	R

Note 1. This bit is not available in the classical CAN function.

The RX Message Buffer CANFD Status Register b (b = 0 to 15) show the status of the FDF, BRS and ESI bits, and pointer of the received CANFD frame.

RMESI bit (Error State Indicator bit)

The RMESI bit has the same value as the ESI bit of the received CANFD frame.

When the received FDF bit is 0, this means a CAN2.0 frame is received and 0 is stored to this bit.

Note: This bit is not available in the classical CAN function.

RMBRS bit (Bit Rate Switch bit)

The RMBRS bit has the same value as the BRS bit of the received CANFD frame.

When the received FDF bit is 0, this means a CAN2.0 frame is received and 0 is stored to this bit.

Note: This bit is not available in the classical CAN function.

RMFDF bit (CAN FD Format bit)

The RMFDF bit has the same value as the FDF bit of the received CANFD frame.

Note: This bit is not available in the classical CAN function.

RMIFL[1:0] bits (RX Message Buffer Information Label Field)

The RMIFL[1:0] bits store the information label value from the related Global Acceptance Filter List entry.

RMPTR[15:0] bits (RX Message Buffer Pointer Field)

The RMPTR[15:0] bits store the pointer value from the related Global Acceptance Filter List entry.

29.2.62.6 CFDRMDFb_p : RX Message Buffer Data Field p Registers (p = 0 to 15, b = 0 to 15)

Base address: CANFD = 0x400B_0000

Offset address: 0x092C + 0x004C × b + 0x0004 × p (b = 0 to 7 , p = 0 to 15)
0x0D2C + 0x004C × (b - 8) + 0x0004 × p (b = 8 to 15 , p = 0 to 15)

Bit position:	31							24	23							16	15							8	7							0
Bit field:	RMDB_HH[7:0]								RMDB_HL[7:0]								RMDB_LH[7:0]								RMDB_LL[7:0]							
Value after reset:	0	0	0	0	0	0	0	0	0	0	0	0	0	0	0	0	0	0	0	0	0	0	0	0	0	0	0	0	0	0	0	0

Bit	Symbol	Function	R/W
7:0	RMDB_LL[7:0]	RX Message Buffer Data Byte (p × 4)	R
15:8	RMDB_LH[7:0]	RX Message Buffer Data Byte ((p × 4) + 1)	R
23:16	RMDB_HL[7:0]	RX Message Buffer Data Byte ((p × 4) + 2)	R
31:24	RMDB_HH[7:0]*1	RX Message Buffer Data Byte ((p × 4) + 3)	R

Note 1. These bits are not available in the classical CAN function.

The RX Message Buffer Data Field p Register b (p = 0 to 15, b = 0 to 15) store the data bytes (p × 4) to data bytes ((p × 4) + 3) of the received message.

RMDB_LL[7:0] bits (RX Message Buffer Data Byte (p × 4))

The RMDB_LL[7:0] bits store data bytes (p × 4) of the message in the RX message buffer.

Unused data bytes are filled with 0x00.

RMDB_LH[7:0] bits (RX Message Buffer Data Byte ((p × 4) + 1))

The RMDB_LH[7:0] bits store data bytes ((p × 4) + 1) of the message in the RX message buffer.

Unused Data Bytes will be filled with 0x00.

RMDB_HL[7:0] bits (RX Message Buffer Data Byte ((p × 4) + 2))

The RMDB_HL[7:0] bits store data bytes ((p × 4) + 2) of the message in the RX message buffer.

Unused data bytes are filled with 0x00.

RMDB_HH[7:0] bits (RX Message Buffer Data Byte ((p × 4) + 3))

The RMDB_HH[7:0] bits store data bytes ((p × 4) + 3) of the message in the RX message buffer.

Unused data bytes are filled with 0x00.

29.2.62.7 CFDRFMBCPb[0] : RX FIFO Access Message Buffer Component b (b = 0 to 1)

Base address: CANFD = 0x400B_0000

Offset address: See Table 29.6.

Bit position:	31																														0
Bit field:	Rc[31:0]																														
Value after reset:	0	0	0	0	0	0	0	0	0	0	0	0	0	0	0	0	0	0	0	0	0	0	0	0	0	0	0	0	0	0	0

Bit	Symbol	Function	R/W
31:0	Rc[31:0]	RX FIFO Access Message Buffer Component c See Table 29.9, Table 29.10 and the descriptions that follow for a detailed description of each register and its related bits, contained within this message buffer component.	R

Where the total number of CFDRFMBCPb = 2 as shown in Figure 29.28 (c = RX FIFO Access Message Buffer Component Register index = [0…18])

Rc[31:0] bits (RX FIFO Access Message Buffer Component c)

The RX FIFO Access Message Buffer component comprises of the following registers:

- CFDRFIDb
- CFDRFPTRb
- CFDRFFDSTSb
- CFDRFDFbp

See Table 29.10 for details on how to interpret the structure of this buffer component and how to access the respective registers.

Table 29.9 RX FIFO Access Message Buffer component summary (1 of 2)

Rc	
R0	RX FIFO Access ID Registers
R1	RX FIFO Access Pointer Register
R2	RX FIFO Access CANFD Status Registers
R3	RX FIFO Access Data Field 0 Registers
R4	RX FIFO Access Data Field 1 Registers
R5	RX FIFO Access Data Field 2 Registers
R6	RX FIFO Access Data Field 3 Registers
R7	RX FIFO Access Data Field 4 Registers
R8	RX FIFO Access Data Field 5 Registers
R9	RX FIFO Access Data Field 6 Registers
R10	RX FIFO Access Data Field 7 Registers
R11	RX FIFO Access Data Field 8 Registers
R12	RX FIFO Access Data Field 9 Registers
R13	RX FIFO Access Data Field 10 Registers
R14	RX FIFO Access Data Field 11 Registers
R15	RX FIFO Access Data Field 12 Registers
R16	RX FIFO Access Data Field 13 Registers
R17	RX FIFO Access Data Field 14 Registers
R18	RX FIFO Access Data Field 15 Registers

Table 29.9 RX FIFO Access Message Buffer component summary (2 of 2)

Rc	
R[19...31]	—

Table 29.10 RX Message Buffer Component (RMBCP) Detailed

Rc	p	Symbol	31	30	29	28	27	26	25	24	23	22	21	20	19	18	17	16	15	14	13	12	11	10	9	8	7	6	5	4	3	2	1	0
R0	x	CFDRMIDb	RMIDE	RMRTR	—	RMID																												
R1	x	CFDRMPTRb	RMDLC				—	—	—	—	—	—	—	—	—	—	—	—	RMTS															
R2	x	CFDRMFDSTSb	RMPTR																—	—	—	—	—	—	RMIFL		—	—	—	—	—	RMFDF	RMBRS	RMESI
R3	0	CFDRMDFbp	RMDB_HH								RMDB_HL								RMDB_LH								RMDB_LL							
R[4…18]	[1…15]	CFDRMDFbp	RMDB_HH								RMDB_HL								RMDB_LH								RMDB_LL							

29.2.62.8 CFDRFIDb : RX FIFO Access ID Register b (b = 0 to 1)

Base address: CANFD = 0x400B_0000

Offset address: 0x0520 + 0x004C × b

Bit position:	31	30	29																													0
Bit field:	RFIDE	RFRTR	—	RFID[28:0]																												
Value after reset:	0	0	0	0	0	0	0	0	0	0	0	0	0	0	0	0	0	0	0	0	0	0	0	0	0	0	0	0	0	0	0	0

Bit	Symbol	Function	R/W
28:0	RFID[28:0]	RX FIFO Buffer ID Field STD-ID/EXT-ID fields	R
29	—	This bit is read as 0.	R
30	RFRTR	RX FIFO Buffer RTR bit 0: Data frame 1: Remote frame	R
31	RFIDE	RX FIFO Buffer IDE bit 0: STD-ID has been received 1: EXT-ID has been received	R

The RX FIFO Access ID Registers b (b = 0 to 1) store the ID field, IDE bit and RTR bit of the message.

RFID[28:0] bits (RX FIFO Buffer ID Field)

The RFID[28:0] bits are the bits of the STD-ID/EXT-ID fields of the message in the FIFO buffer.

For alignment of these bits in standard and extended frame format, see section 29.2.61. Identifier Bits Alignment.

RFRTR bit (RX FIFO Buffer RTR bit)

The RFRTR bit shows whether a data frame or a remote frame was stored in the FIFO buffer.

Note: There are no remote frames in CANFD format. When a CANFD frame was received, the register reflects the state of the received value (RRS bit in FD frame format).

RFIDE bit (RX FIFO Buffer IDE bit)

The RFIDE bit shows whether message with the Standard Identifier or Extended Identifier was received in the FIFO buffer.

29.2.62.9 CFDRFPTRb : RX FIFO Access Pointer Register b (b = 0 to 1)

Base address: CANFD = 0x400B_0000

Offset address: 0x0524 + 0x004C × b

Bit position:	31			28												15														0
Bit field:	RFDLC[3:0]				—	—	—	—	—	—	—	—	—	—	—	—	RFTS[15:0]													
Value after reset:	0	0	0	0	0	0	0	0	0	0	0	0	0	0	0	0	0	0	0	0	0	0	0	0	0	0	0	0	0	0

Bit	Symbol	Function	R/W
15:0	RFTS[15:0]	RX FIFO Timestamp Value Timestamp value of the received CAN frame	R
27:16	—	These bits are read as 0.	R
31:28	RFDLC[3:0]	RX FIFO Buffer DLC Field Number of data bytes received in a CAN frame	R

The FIFO Access Pointer Registers b (b = 0 to 1) store the DLC and Timestamp fields for the received message.

RFTS[15:0] bits (RX FIFO Timestamp Value)

The RFTS[15:0] bits store the timestamp value taken at the capture point as configured by the CFDGFDCFG.TSCCFG bit of the received message.

RFDLC[3:0] bits (RX FIFO Buffer DLC Field)

The RFDLC[3:0] bits store the number of data bytes that were received in the RX FIFO buffer.

See Table 5 in ISO 11898-1 (2015) Specification for details in defining the number of data bytes that were received.

29.2.62.10 CFDRFFDSTSb : RX FIFO Access CANFD Status Register b (b = 0 to 1)

Base address: CANFD = 0x400B_0000

Offset address: 0x0528 + 0x004C × b

Bit position:	31	30	29	28	27	26	25	24	23	22	21	20	19	18	17	16
Bit field:	CFDRFPTR[15:0]															
Value after reset:	0	0	0	0	0	0	0	0	0	0	0	0	0	0	0	0

Bit position:	15	14	13	12	11	10	9	8	7	6	5	4	3	2	1	0
Bit field:	—	—	—	—	—	—	RFIFL[1:0]		—	—	—	—	—	RFFDF	RFBRS	RFESI
Value after reset:	0	0	0	0	0	0	0	0	0	0	0	0	0	0	0	0

Bit	Symbol	Function	R/W
0	RFESI*1	Error State Indicator bit 0: CANFD frame received from error active node 1: CANFD frame received from error passive node	R
1	RFBRS*1	Bit Rate Switch bit 0: CANFD frame received with no bit rate switch 1: CANFD frame received with bit rate switch	R
2	RFFDF*1	CAN FD Format bit 0: Non CANFD frame received 1: CANFD frame received	R

Bit	Symbol	Function	R/W
7:3	—	These bits are read as 0.	R
9:8	RFIFL[1:0]	RX FIFO Buffer Information Label Field	R
15:10	—	These bits are read as 0.	R
31:16	CFDRFPTR[15:0]	RX FIFO Buffer Pointer Field	R

Note 1. This bit is not available in the classical CAN function.

The RX FIFO Access CANFD Status Registers b (b = 0 to 1) show the status of the FDF, BRS, and ESI bits including the pointer of the received CANFD frame.

RFESI bit (Error State Indicator bit)

The RFESI bit has the same value as the ESI bit of the received CANFD frame.

When the received FDF bit is 0, this means a CAN2.0 frame is received and 0 is stored to this bit.

Note: This bit is not available in the classical CAN function.

RFBRS bit (Bit Rate Switch bit)

The RFBRS bit has the same value as the BRS bit of the received CANFD frame.

When the received FDF bit is 0, this means a CAN2.0 frame is received and 0 is stored to this bit.

Note: This bit is not available in the classical CAN function.

RFFDF bit (CAN FD Format bit)

The RFFDF bit has the same value as the FDF bit of the received CANFD frame.

Note: This bit is not available in the classical CAN function.

RFIFL[1:0] bits (RX FIFO Buffer Information Label Field)

The RFIFL[1:0] bits store the information label value from the related Global Acceptance Filter List entry.

CFDRFPTR[15:0] bits (RX FIFO Buffer Pointer Field)

The CFDRFPTR[15:0] bits store the pointer value from the related Global Acceptance Filter List entry.

29.2.62.11 CFDRFDFb_p : RX FIFO Access Data Field p Register b (p = 0 to 15, b = 0 to 1)

Base address: CANFD = 0x400B_0000

Offset address: 0x052C + 0x004 × p + 0x04C × b

Bit position:	31							24	23							16	15							8	7							0
Bit field:	RFDB_HH[7:0]								RFDB_HL[7:0]								RFDB_LH[7:0]								RFDB_LL[7:0]							
Value after reset:	0	0	0	0	0	0	0	0	0	0	0	0	0	0	0	0	0	0	0	0	0	0	0	0	0	0	0	0	0	0	0	0

Bit	Symbol	Function	R/W
7:0	RFDB_LL[7:0]	RX FIFO Buffer Data Byte (p × 4)	R
15:8	RFDB_LH[7:0]	RX FIFO Buffer Data Byte ((p × 4) + 1)	R
23:16	RFDB_HL[7:0]	RX FIFO Buffer Data Byte ((p × 4) + 2)	R
31:24	RFDB_HH[7:0]	RX FIFO Buffer Data Byte ((p × 4) + 3)	R

The RX FIFO Access Data Field p Registers b (p = 0 to 15, b = 0 to 1) store data bytes ((p × 4) to data byte ((p × 4) + 3) of the received message.

RFDB_LL[7:0] bits (RX FIFO Buffer Data Byte (p × 4))

The RFDB_LL[7:0] bits store data bytes (p × 4) of the message present in the FIFO buffer.

Unused data bytes are filled with 0x00 according to the configured data payload size CFDRFCCa.RFPLS.

RFDB_LH[7:0] bits (RX FIFO Buffer Data Byte ((p × 4) + 1))

The RFDB_LH[7:0] bits store data bytes ((p × 4) + 1)) of the message present in the FIFO buffer.

Unused data bytes are filled with 0x00.

RFDB_HL[7:0] bits (RX FIFO Buffer Data Byte ((p × 4) + 2))

The RFDB_HL[7:0] bits store data bytes ((p × 4) + 2) of the message present in the FIFO buffer.

Unused data bytes are filled with 0x00.

RFDB_HH[7:0] bits (RX FIFO Buffer Data Byte ((p × 4) + 3))

The RFDB_HH[7:0] bits store data bytes ((p × 4) + 3) of the message present in the FIFO buffer.

Unused data bytes are filled with 0x00.

29.2.62.12 CFDCFMBCP0[0] : Common FIFO Access Message Buffer Component

Base address: CANFD = 0x400B_0000

Offset address: See Table 29.6

Bit position:	31																														0
Bit field:	Rc[31:0]																														
Value after reset:	0	0	0	0	0	0	0	0	0	0	0	0	0	0	0	0	0	0	0	0	0	0	0	0	0	0	0	0	0	0	0

Bit	Symbol	Function	R/W
31:0	Rc[31:0]	Common FIFO Access Message Buffer Component c Refer to Table 29.11, Table 29.12 and the descriptions that follow for a detailed description of each register and its related bits, contained within this message buffer component.	R

Where the total number of CFDCFMBCP0 = 1 as shown in Figure 29.28 (c = Common FIFO Message Buffer Component Register index = [0…18])

Rc[31:0] bit (Common FIFO Access Message Buffer Component c)

The Common FIFO Access Message Buffer Component is made up of the following registers: CFDCFID, CFDCFPTR, CFFDSTS0, and CFDCFDFp. Refer to Table 29.12 for details of how to interpret the structure of this buffer component and how to access the respective registers.

Table 29.11 Common FIFO Access Message Buffer Component Summary (1 of 2)

Common FIFO Access Message Buffer Component (CFMBCP)	
Rc	**CANFD mode (CAN_FD_MODE = 1)**
R0	Common FIFO Access ID Registers
R1	Common FIFO Access Pointer Register
R2	Common FIFO Access CANFD Status Registers
R3	Common FIFO Access Data Field 0 Registers
R4	Common FIFO Access Data Field 1 Registers
R5	Common FIFO Access Data Field 2 Registers
R6	Common FIFO Access Data Field 3 Registers
R7	Common FIFO Access Data Field 4 Registers
R8	Common FIFO Access Data Field 5 Registers
R9	Common FIFO Access Data Field 6 Registers
R10	Common FIFO Access Data Field 7 Registers

Table 29.11 Common FIFO Access Message Buffer Component Summary (2 of 2)

Common FIFO Access Message Buffer Component (CFMBCP)	
Rc	**CANFD mode (CAN_FD_MODE = 1)**
R11	Common FIFO Access Data Field 8 Registers
R12	Common FIFO Access Data Field 9 Registers
R13	Common FIFO Access Data Field 10 Registers
R14	Common FIFO Access Data Field 11 Registers
R15	Common FIFO Access Data Field 12 Registers
R16	Common FIFO Access Data Field 13 Registers
R17	Common FIFO Access Data Field 14 Registers
R18	Common FIFO Access Data Field 15 Registers
R[19…31]	—

Table 29.12 Common FIFO Access Message Buffer Component (CFMBCP) Detailed

Rc	p	Symbol	31	30	29	28	27	26	25	24	23	22	21	20	19	18	17	16	15	14	13	12	11	10	9	8	7	6	5	4	3	2	1	0
R0	x	CFDCFID	CFIDE	CFRTR	THLEN	CFID																												
R1	x	CFDCFPTR	CFDLC				—	—	—	—	—	—	—	—	—	—	—	—	CFTS															
R2	x	CFDCFFDCSTS	CFPTR																—	—	—	—	—	—	CFIFL		—	—	—	—	—	CFFDF	CFBRS	CFESI
R3	0	CFDCFDFp	CFDB_HH								CFDB_HL								CFDB_LH								CFDB_LL							
R[4…18]	[1…15]	CFDCFDFp	CFDB_HH								CFDB_HL								CFDB_LH								CFDB_LL							
R[19…31]	x	—	—	—	—	—	—	—	—	—	—	—	—	—	—	—	—	—	—	—	—	—	—	—	—	—	—	—	—	—	—	—	—	—

29.2.62.13 CFDCFID : Common FIFO Access ID Register

Base address: CANFD = 0x400B_0000

Offset address: 0x05B8

Bit position:	31	30	29	28																												0
Bit field:	CFIDE	CFRTR	THLEN	CFID[28:0]																												
Value after reset:	0	0	0	0	0	0	0	0	0	0	0	0	0	0	0	0	0	0	0	0	0	0	0	0	0	0	0	0	0	0	0	0

Bit	Symbol	Function	R/W
28:0	CFID[28:0]	Common FIFO Buffer ID Field STD-ID / EXT-ID fields	R/W

Bit	Symbol	Function	R/W
29	THLEN	THL Entry enable TX FIFO Mode: 0: Entry will not be stored in THL after successful TX. 1: Entry will be stored in THL after successful TX. RX FIFO Mode: Reserved, this bit is read as 0	R/W
30	CFRTR	Common FIFO Buffer RTR Bit 0: Data Frame 1: Remote Frame	R/W
31	CFIDE	Common FIFO Buffer IDE Bit 0: STD-ID will be transmitted or has been received 1: EXT-ID will be transmitted or has been received	R/W

The Common FIFO Access ID registers store the ID field, IDE bit and RTR bit of the message.

In TX mode, users can read data from the FIFO, only for the current entry based on the write pointer value, not for the other entries.

CFID[28:0] bit (Common FIFO Buffer ID Field)

These are the bits of the STD-ID / EXT-ID fields of the message in the FIFO Buffer.

In TX mode, users can write and read from FIFO buffers.

In RX mode, users can only read data from FIFO buffers.

THLEN bit (THL Entry enable)

This bit controls the storage of an entry corresponding to the transmitted message in the TX History list at the end of a successful transmission.

In TX mode, users can write and read from FIFO buffers.

In RX mode, users can only read data from FIFO buffers.

CFRTR bit (Common FIFO Buffer RTR Bit)

This bit selects whether a Data Frame or a Remote Frame will be transmitted from or was received in the FIFO Buffer.

Note: There are no remote frames in CANFD format. In case a CANFD frame was received (RX mode) the register reflects the state of the received value (RRS bit in FD frame format). In case of CANFD transmission (TX mode CFDCFID.CFFDF =1) the bit is always transmitted dominant (Data Frame).

In TX mode, users can write and read from FIFO buffers.

In RX mode, users can only read data from FIFO buffers.

CFIDE bit (Common FIFO Buffer IDE Bit)

This bit selects whether a message with EXT-ID or STD-ID will be transmitted from or was received in the FIFO Buffer.

In TX mode, users can write and read from FIFO buffers.

In RX mode, users can only read data from FIFO buffers.

29.2.62.14 CFDCFPTR : Common FIFO Access Pointer Register

Base address: CANFD = 0x400B_0000

Offset address: 0x05BC

Bit position:	31			28													15															0
Bit field:	CFDLC[3:0]				—	—	—	—	—	—	—	—	—	—	—	—	CFTS[15:0]															
Value after reset:	0	0	0	0	0	0	0	0	0	0	0	0	0	0	0	0	0	0	0	0	0	0	0	0	0	0	0	0	0	0	0	0

Bit	Symbol	Function	R/W
15:0	CFTS[15:0]	Common FIFO Timestamp Value Timestamp value of the received CAN frame (FIFO in RX mode).	R/W
27:16	—	These bits are read as 0. The write value should be 0.	R/W
31:28	CFDLC[3:0]	Common FIFO Buffer DLC Field Number of data bytes received in a CAN frame, or to be transmitted in a CAN frame.	R/W

The Common FIFO Access Pointer Registers store the DLC and Timestamp fields.

In TX mode, you can read data from the FIFO buffer, only for the current entry based on the write pointer value, and not for the other entries.

CFTS[15:0] bits (Common FIFO Timestamp Value)

The CFTS[15:0] bits store the timestamp value taken at the capture point as configured by the CFDGFDCFG.TSCCFG bit of the received message (if FIFO is configured in RX mode).

In TX mode, you can read and write from FIFO buffers.

In RX mode, you can only read data from FIFO buffers.

CFDLC[3:0] bits (Common FIFO Buffer DLC Field)

The CFDLC[3:0] bits store the number of data bytes that were received in the FIFO buffer or are to be transmitted.

See Table 5 in ISO 11898-1 (2015) Specification for details in defining the number of data bytes.

In TX mode, you can read and write from the FIFO buffers. Do not read data for the other entries in the FIFO when configured in TX mode.

In RX mode, you can only read data from the FIFO buffers.

29.2.62.15 CFDCFFDCSTS : Common FIFO Access CANFD Control/Status Register

Base address: CANFD = 0x400B_0000

Offset address: 0x05C0

Bit position:	31	30	29	28	27	26	25	24	23	22	21	20	19	18	17	16
Bit field:	CFPTR[15:0]															
Value after reset:	0	0	0	0	0	0	0	0	0	0	0	0	0	0	0	0

Bit position:	15	14	13	12	11	10	9	8	7	6	5	4	3	2	1	0
Bit field:	—	—	—	—	—	—	CFIFL[1:0]		—	—	—	—	—	CFFDF	CFBRS	CFESI
Value after reset:	0	0	0	0	0	0	0	0	0	0	0	0	0	0	0	0

Bit	Symbol	Function	R/W
0	CFESI*1	Error State Indicator bit 0: CANFD frame received or to transmit by error active node 1: CANFD frame received or to transmit by error passive node	R/W
1	CFBRS*1	Bit Rate Switch bit 0: CANFD frame received or to transmit with no bit rate switch 1: CANFD frame received or to transmit with bit rate switch	R/W
2	CFFDF*1	CAN FD Format bit 0: Non CANFD frame received or to transmit 1: CANFD frame received or to transmit	R/W
7:3	—	These bits are read as 0. The write value should be 0.	R/W
9:8	CFIFL[1:0]	COMMON FIFO Buffer Information Label Field	R/W
15:10	—	These bits are read as 0. The write value should be 0.	R/W
31:16	CFPTR[15:0]	Common FIFO Buffer Pointer Field	R/W

Note 1. This bit is not available in the classical CAN function.

The Common FIFO Access CANFD Control/Status Registers show the status of the FDF, BRS and ESI bits including the pointer of the received CANFD frame or the CANFD frame to transmit.

In TX mode, you can read data from the FIFO, only for the current entry based on the write pointer value, and not for the other entries.

CFESI bit (Error State Indicator bit)

In TX mode, you can read and write from FIFO buffers. In this mode, when the CANFD module is not in error passive, the CFESI bit equals the write value. Otherwise, it is a don't care and the bit is transmitted as 1 on the CAN bus, indicating this is an error passive node.

In RX mode, you can only read data from FIFO buffers.

In RX mode, the CFESI bit is updated with the ESI bit value of the CANFD frame when it has been received, indicating the error state of the transmitting node. In RX mode, 0 is stored to this bit when the received FDF bit is 0, this means a CAN 2.0 frame is received.

Note: This bit is not available in the classical CAN function.

CFBRS bit (Bit Rate Switch bit)

In TX mode, you can read and write from FIFO buffers. In this mode, the CANFD module either transmits a 0 to indicate no bit rate switch in the frame to be transmitted or a 1 to indicate a bit rate switch in the frame to be transmitted.

In RX mode, you can only read data from FIFO buffers.

In RX mode, the CFBRS bit is updated with the BRS bit value of the CANFD frame when it has been received, indicating whether there is a bit rate switch (1) or (0) on the CANFD frame.

In RX mode, 0 is stored to the CFBRS bit when the received FDF bit is 0, this means a CAN 2.0 frame is received.

Note: This bit is not available in the classical CAN function.

CFFDF bit (CAN FD Format bit)

In TX mode, you can read and write from FIFO buffers. In this mode, the CANFD module either transmits a 0 to indicate a CAN 2.0 frame is to be transmitted or a 1 to indicate a CANFD frame is to be transmitted.

In RX mode, you can only read data from FIFO buffers.

In RX mode, the CFFDF bit is updated with the FDF bit value of the CAN frame when it has been received, indicating whether it is a CAN 2.0 frame (0) or a CANFD frame (1).

Note: This bit is not available in the classical CAN function.

CFIFL[1:0] bits (COMMON FIFO Buffer Information Label Field)

If the Common FIFO is configured in TX mode, the value programmed in CFDCFFDCSTS.CFIFL[1:0] is stored together with additional message information, to the TX History List after successful transmission of the message.

The information label value from the related Global Acceptance Filter List entry is stored in these bits (if FIFO is configured in either RX mode).

In TX mode, you can read and write from FIFO buffers.

In RX mode, you can only read data from FIFO buffers.

CFPTR[15:0] bits (Common FIFO Buffer Pointer Field)

If the Common FIFO is configured in TX mode, the value programmed in CFDCFFDCSTS.CFPTR[15:0] is stored together with additional message information, to the TX History List after successful transmission of the message.

The pointer value from the related Global Acceptance Filter List entry is stored in these bits (if FIFO is configured in either RX mode).

In TX mode, you can read and write from FIFO buffers.

In RX mode, you can only read data from FIFO buffers.

29.2.62.16 CFDCFDFp : Common FIFO Access Data Field p Registers (p = 0 to 15)

Base address: CANFD = 0x400B_0000

Offset address: 0x05C4 + 0x004 × p

Bit position:	31							24	23							16	15							8	7							0
Bit field:	CFDB_HH[7:0]								CFDB_HL[7:0]								CFDB_LH[7:0]								CFDB_LL[7:0]							
Value after reset:	0	0	0	0	0	0	0	0	0	0	0	0	0	0	0	0	0	0	0	0	0	0	0	0	0	0	0	0	0	0	0	0

Bit	Symbol	Function	R/W
7:0	CFDB_LL[7:0]	Common FIFO Buffer Data Bytes (p × 4)	R/W
15:8	CFDB_LH[7:0]	Common FIFO Buffer Data Bytes ((p × 4) + 1)	R/W
23:16	CFDB_HL[7:0]	Common FIFO Buffer Data Bytes ((p × 4) + 2)	R/W
31:24	CFDB_HH[7:0]	Common FIFO Buffer Data Bytes ((p × 4) + 3)	R/W

The FIFO Access Data Field p Registers (p = 0 to 15) store data bytes (p × 4) to data bytes ((p × 4) + 3) of the message.

In TX mode, you can read data from the FIFO, only for the current entry based on the write pointer value, and not for the other entries.

CFDB_LL[7:0] bits (Common FIFO Buffer Data Bytes (p × 4))

The CFDB_LL[7:0] bits store data bytes (p × 4) of the message present in the FIFO buffer.

In TX mode, you can read and write from the FIFO buffers.

In RX mode, you can only read data from the FIFO buffers.

In RX mode, unused data bytes are filled with 0x00, according to their configured data payload size CFDCFCC.CFPLS.[*1]

CFDB_LH[7:0] bits (Common FIFO Buffer Data Bytes ((p × 4) + 1))

The CFDB_LH[7:0] bits store data bytes ((p × 4) + 1) of the message present in the FIFO buffer.

In TX mode, you can read and write from the FIFO buffers.

In RX mode, you can only read data from the FIFO buffers.

In RX mode, unused data bytes are filled with 0x00, according to their configured data payload size CFDCFCC.CFPLS.[*1]

CFDB_HL[7:0] bits (Common FIFO Buffer Data Bytes ((p × 4) + 2))

The CFDB_HL[7:0] bits store data bytes ((p × 4) + 2) of the message present in the FIFO buffer.

In TX mode, you can read and write from the FIFO buffers.

In RX mode, you can only read data from the FIFO buffers.

In RX mode, unused data bytes are filled with 0x00, according to their configured data payload size CFDCFCC.CFPLS.[*1]

CFDB_HH[7:0] bits (Common FIFO Buffer Data Bytes ((p × 4) + 3))

The CFDB_HH[7:0] bits store data bytes ((p × 4) + 3) of the message present in the FIFO buffer.

In TX mode, you can read and write from the FIFO buffers.

In RX mode, you can only read data from the FIFO buffers.

In RX mode, unused data bytes are filled with 0x00, according to their configured data payload size CFDCFCC.CFPLS.[*1]

Note 1. In RX mode, unused data bytes are filled with 0x00 according to the configured data payload size CFDCFCC.CFPLS, which is a CANFD feature not found in classical CAN.

29.2.62.17 CFDTMBCPb[0] : TX Message Buffer Component b (b = 0 to 3)

Base address: CANFD = 0x400B_0000

Offset address: See Table 29.6

Bit position:	31																															0
Bit field:	Rc[31:0]																															
Value after reset:	0	0	0	0	0	0	0	0	0	0	0	0	0	0	0	0	0	0	0	0	0	0	0	0	0	0	0	0	0	0	0	0

Bit	Symbol	Function	R/W
31:0	Rc[31:0]	TX Message Buffer Component c Refer to Table 29.13, Table 29.14 and the descriptions that follow for a detailed description of each register and its related bits, contained within this message buffer component.	R

Where the total number of CFDTMBCPn = 4 as shown in Figure 29.28 (c = TX Message Buffer Component Register index = [0…18])

Rc[31:0] bit (TX Message Buffer Component c)

TX Message Buffer Component c

The TX Message Buffer Component is made up of the following registers: CFDTMIDb, CFDTMPTRb, CFDTMFDCTRb, and CFDTMDFbp. Refer to Table 29.14 for details of how to interpret the structure of this buffer component and how to access the respective registers.

Table 29.13 TX Message Buffer Component Summary

TX Message Buffer Component (TMBCP)	
Rc	**CANFD mode (CAN_FD_MODE = 1b)**
R0	TX Message Buffer (b) ID Registers
R1	TX Message Buffer (b) Pointer Registers
R2	TX Message Buffer (b) CANFD Status Registers
R3	TX Message Buffer (b) Data Field 0 Registers
R4	TX Message Buffer (b) Data Field 1 Registers
R5	TX Message Buffer (b) Data Field 2 Registers
R6	TX Message Buffer (b) Data Field 3 Registers
R7	TX Message Buffer (b) Data Field 4 Registers
R8	TX Message Buffer (b) Data Field 5 Registers
R9	TX Message Buffer (b) Data Field 6 Registers
R10	TX Message Buffer (b) Data Field 7 Registers
R11	TX Message Buffer (b) Data Field 8 Registers
R12	TX Message Buffer (b) Data Field 9 Registers
R13	TX Message Buffer (b) Data Field 10 Registers
R14	TX Message Buffer (b) Data Field 11 Registers
R15	TX Message Buffer (b) Data Field 12 Registers
R16	TX Message Buffer (b) Data Field 13 Registers
R17	TX Message Buffer (b) Data Field 14 Registers
R18	TX Message Buffer (b) Data Field 15 Registers
R[19…31]	—

Table 29.14 TX Message Buffer Component (TMBCP) Detailed

Rc	p	Symbol	31	30	29	28	27	26	25	24	23	22	21	20	19	18	17	16	15	14	13	12	11	10	9	8	7	6	5	4	3	2	1	0
R0	x	CFDTMIDb	TMIDE	TMRTR	THLEN	TMID																												
R1	x	CFDTMPTRb	TMDLC				—	—	—	—	—	—	—	—	—	—	—	—	CFTS															
R2	x	CFDTMFDCTRb	TMPTR																—	—	—	—	—	—	TMIFL		—	—	—	—	—	TMFDF	TMBRS	TMESI
R3	0	CFDTMDFbp	TMDB_HH								TMDB_HL								TMDB_LH								TMDB_LL							
R[4…18]	[1…15]	CFDTMDFbp	TMDB_HH								TMDB_HL								TMDB_LH								TMDB_LL							

29.2.62.18 CFDTMIDb : TX Message Buffer ID Registers (b = 0 to 3)

Base address: CANFD = 0x400B_0000

Offset address: 0x0604 + 0x004C × b

Bit position:	31	30	29																													0
Bit field:	TMIDE	TMRTR	THLEN	TMID[28:0]																												
Value after reset:	0	0	0	0	0	0	0	0	0	0	0	0	0	0	0	0	0	0	0	0	0	0	0	0	0	0	0	0	0	0	0	0

Bit	Symbol	Function	R/W
28:0	TMID[28:0]	TX Message Buffer ID Field STD-ID/EXT-ID fields	R/W
29	THLEN	Tx History List Entry 0: Entry not stored in THL after successful TX 1: Entry stored in THL after successful TX	R/W
30	TMRTR	TX Message Buffer RTR bit 0: Data frame 1: Remote frame	R/W
31	TMIDE	TX Message Buffer IDE bit 0: STD-ID is transmitted 1: EXT-ID is transmitted	R/W

Each TX Message Buffer ID Register b (b = 0 to 3) are used to store the ID, IDE, RTR fields and history configuration of the message to be transmitted from the associated buffer.

TMID[28:0] bits (TX Message Buffer ID Field)

The TMID[28:0] bits are bits of the STD-ID/EXT-ID fields of the message stored in this TX message buffer.

Do not write to these bits when the related CANFD channel is in CH_SLEEP mode.

THLEN bit (Tx History List Entry)

The THLEN bit controls the storage of an entry corresponding to the transmitted message in the TX History list at the end of a successful transmission.

Do not write to these bits when the related CANFD channel is in CH_SLEEP mode.

TMRTR bit (TX Message Buffer RTR bit)

The TMRTR bit selects whether a data frame or remote frame is to be transmitted from this TX message buffer.

Note: There are no remote frames in CANFD format. For a CANFD transmission (CFDTMFDCTRb.CFFDF = 1), this bit is always transmitted dominant (data frame).

Do not write to these bits when the related CANFD channel is in CH_SLEEP mode.

TMIDE bit (TX Message Buffer IDE bit)

The TMIDE bit selects whether a message with EXT-ID or STD-ID is to be transmitted from this TX message buffer.

Do not write to these bits when the related CANFD channel is in CH_SLEEP mode.

29.2.62.19 CFDTMPTRb : TX Message Buffer Pointer Register (b = 0 to 3)

Base address: CANFD = 0x400B_0000

Offset address: 0x0608 + 0x004C × b

Bit position:	31			28																												0
Bit field:	TMDLC[3:0]				—	—	—	—	—	—	—	—	—	—	—	—	—	—	—	—	—	—	—	—	—	—	—	—	—	—	—	—	—	—
Value after reset:	0	0	0	0	0	0	0	0	0	0	0	0	0	0	0	0	0	0	0	0	0	0	0	0	0	0	0	0	0	0	0	0

Bit	Symbol	Function	R/W
27:0	—	The read values are undefined. The write value should be 0.	R/W
31:28	TMDLC[3:0]	TX Message Buffer DLC Field Number of data bytes to be transmitted in a CAN frame.	R/W

Each TX Message Buffer Pointer Register b (b = 0 to 3) is used to store the DLC fields of the message to transmit from the associated buffer.

TMDLC[3:0] bits (TX Message Buffer DLC Field)

The TMDLC[3:0] bits select the number of data bytes to be transmitted from this TX message buffer when the corresponding TMRTR bit is configured as 0.

See Table 5 in ISO 11898-1 (2015) Specification for details in defining the number of data bytes to be transmitted.

Do not write to these bits when the related CANFD channel is in CH_SLEEP mode.

29.2.62.20 CFDTMFDCTRb : TX Message Buffer CANFD Control Register (b = 0 to 3)

Base address: CANFD = 0x400B_0000

Offset address: 0x060C + 0x004C × b

Bit position:	31	30	29	28	27	26	25	24	23	22	21	20	19	18	17	16
Bit field:	TMPTR[15:0]															
Value after reset:	0	0	0	0	0	0	0	0	0	0	0	0	0	0	0	0

Bit position:	15	14	13	12	11	10	9	8	7	6	5	4	3	2	1	0
Bit field:	—	—	—	—	—	—	TMIFL[1:0]		—	—	—	—	—	TMFDF	TMBRS	TMESI
Value after reset:	0	0	0	0	0	0	0	0	0	0	0	0	0	0	0	0

Bit	Symbol	Function	R/W
0	TMESI*1	Error State Indicator bit 0: CANFD frame to transmit by error active node 1: CANFD frame to transmit by error passive node	R/W
1	TMBRS*1	Bit Rate Switch bit 0: CANFD frame to transmit with no bit rate switch 1: CANFD frame to transmit with bit rate switch	R/W

Bit	Symbol	Function	R/W
2	TMFDF*1	CAN FD Format bit 0: Non CANFD frame to transmit 1: CANFD frame to transmit	R/W
7:3	—	The read values are undefined. The write value should be 0.	R/W
9:8	TMIFL[1:0]	TX Message Buffer Information Label Field	R/W
15:10	—	The read values are undefined. The write value should be 0.	R/W
31:16	TMPTR[15:0]	TX Message Buffer Pointer Field	R/W

Note 1. This bit is not available in the classical CAN function.

The TX Message Buffer CANFD Control Registers b (b = 0 to 3) show the status of the FDF, BRS and ESI bits including the pointer fields of the CANFD frame to be transmitted.

TMESI bit (Error State Indicator bit)

If the channel is not in error passive, then the TMESI bit equals the write value, otherwise it is a don't care and the bit is transmitted as 1 on the CAN bus, indicating this is an error passive node.

Do not write to the TMESI bit when the related CANFD channel is in CH_SLEEP mode.

Note: This bit is not available in the classical CAN function.

TMBRS bit (Bit Rate Switch bit)

Do not write to the TMBRS bit when the related CANFD channel is in CH_SLEEP mode.

Note: This bit is not available in the classical CAN function.

TMFDF bit (CAN FD Format bit)

Do not write to the TMFDF bit when the related CANFD channel is in CH_SLEEP mode.

Note: This bit is not available in the classical CAN function.

TMIFL[1:0] bits (TX Message Buffer Information Label Field)

The TMIFL[1:0] bits store the information label value to be copied, together with additional message information, in the TX History List after successful transmission of the message.

Do not write to these bits when the related CANFD channel is in CH_SLEEP mode.

TMPTR[15:0] bits (TX Message Buffer Pointer Field)

The TMPTR[15:0] bits store the pointer value to be copied, together with additional message information in the TX History List after successful transmission of the message.

Do not write to these bits when the related CANFD channel is in CH_SLEEP mode.

29.2.62.21 CFDTMDFb_p : TX Message Buffer Data Field Register (p= 0 to 15 , b= 0 to 3)

Base address: CANFD = 0x400B_0000

Offset address: 0x0610 + 0x004 × p + 0x004C × b

Bit position:	31							24	23							16	15							8	7							0
Bit field:	TMDB_HH[7:0]								TMDB_HL[7:0]								TMDB_LH[7:0]								TMDB_LL[7:0]							
Value after reset:	0	0	0	0	0	0	0	0	0	0	0	0	0	0	0	0	0	0	0	0	0	0	0	0	0	0	0	0	0	0	0	0

Bit	Symbol	Function	R/W
7:0	TMDB_LL[7:0]	TX Message Buffer Data Byte (p × 4)	R/W
15:8	TMDB_LH[7:0]	TX Message Buffer Data Byte ((p × 4) + 1)	R/W

Bit	Symbol	Function	R/W
23:16	TMDB_HL[7:0]	TX Message Buffer Data Byte ((p × 4) + 2)	R/W
31:24	TMDB_HH[7:0]	TX Message Buffer Data Byte ((p × 4) + 3)	R/W

Each TX Message Buffer Data Field p Register b (p = 0 to 15, b = 0 to 3) is used to store data bytes (p × 4) to data bytes ((p × 4) + 3) of the message to transmit from the associated buffer.

TMDB_LL[7:0] bits (TX Message Buffer Data Byte (p × 4))

TMDB_LL[7:0] bits store data bytes (p × 4) of the message in the TX message buffer.

Do not write to these bits when the related CANFD channel is in CH_SLEEP mode.

TMDB_LH[7:0] bits (TX Message Buffer Data Byte ((p × 4) + 1))

TMDB_LH[7:0] bits store data bytes ((p × 4) + 1) of the message in the TX message buffer.

Do not write to these bits when the related CANFD channel is in CH_SLEEP mode.

TMDB_HL[7:0] bits (TX Message Buffer Data Byte ((p × 4) + 2))

TMDB_HL[7:0] bits store data bytes ((p × 4) + 2) of the message in the TX message buffer.

Do not write to these bits when the related CANFD channel is in CH_SLEEP mode.

TMDB_HH[7:0] bits (TX Message Buffer Data Byte ((p × 4) + 3))

TMDB_HH[7:0] bits store data bytes ((p × 4) + 3) of the message in the TX message buffer.

Do not write to these bits when the related CANFD channel is in CH_SLEEP mode.

29.3 Modes of Operation

29.3.1 Overview

The modes of the CANFD module can be classified into 2 groups:

- Global modes
- Channel modes

29.3.2 Global Modes

These modes are applicable for the complete CANFD module and therefore are called Global modes. The global modes of the CANFD module are:

- Global Sleep
- Global Reset
- Global Halt
- Global Operation.

Figure 29.2 shows the possible transitions between the Global modes.

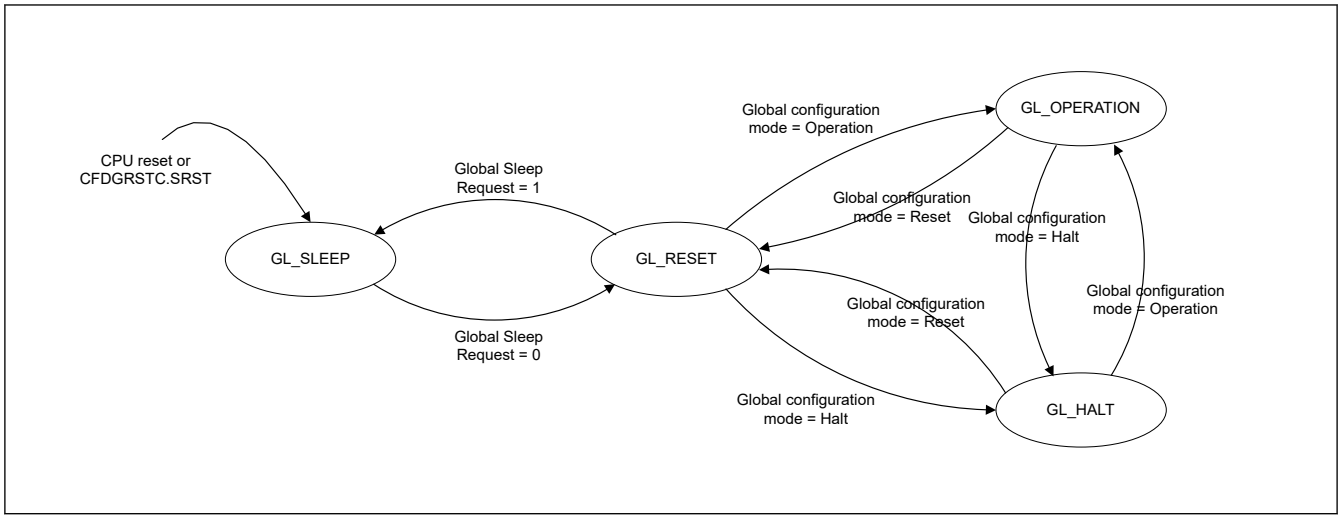

Figure 29.2 Transition between CANFD Global modes

Change in the Global mode can affect the Channel mode. Table 29.15 shows the effect of a Global mode transition on a Channel mode.

Table 29.15 Possible CANFD Channel modes and Global modes

Current Global mode	Target Global mode			
	Sleep	**Reset**	**Halt**	**Operation**
Sleep		Ch-Sleep: Keep Ch-Reset: N/A Ch-Halt: N/A Ch-Oper: N/A		
Reset	Ch-Sleep: Keep Ch-Reset: → Ch-Sleep Ch-Halt: N/A Ch-Oper: N/A		Ch-Sleep: Keep Ch-Reset: Keep Ch-Halt: N/A Ch-Oper: N/A	Ch-Sleep: Keep Ch-Reset: Keep Ch-Halt: N/A Ch-Oper: N/A
Halt		Ch-Sleep: Keep Ch-Reset: Keep Ch-Halt: → Ch-Reset Ch-Oper: N/A		Ch-Sleep: Keep Ch-Reset: Keep Ch-Halt: Keep Ch-Oper: N/A
Operation		Ch-Sleep: Keep Ch-Reset: Keep Ch-Halt: → Ch-Reset Ch-Oper: → Ch-Reset	Ch-Sleep: Keep Ch-Reset: Keep Ch-Halt: Keep Ch-Oper: → Ch-Halt	

29.3.2.1 Global Sleep Mode

After the release of a hardware reset or after setting and clearing a CFDGRSTC.SRST bit, the CANFD module automatically enters Global Sleep mode.

The CANFD module also enters the Global Sleep mode when the Global Sleep Request bit is set while it is in Global Reset mode. This control bit cannot be set in Global Halt mode or Global Operation mode.

Setting the Global Sleep Request bit sets Channel Sleep Request bit and forces the channel into the Channel Sleep mode.

Sleep mode is used for power saving purpose. When CANFD module is in Global Sleep mode, only the clock for CPU write access to the Global Sleep Mode Request bit is active. All other clocks are stopped and all other functions of the CANFD module are suspended.

Read access from all registers is still possible and all register values are preserved.

After setting the Global Sleep Request bit, it is necessary to confirm that the Global Sleep status has been updated, indicating successful transition to Global Sleep mode before the Global Sleep Request bit can be cleared again.

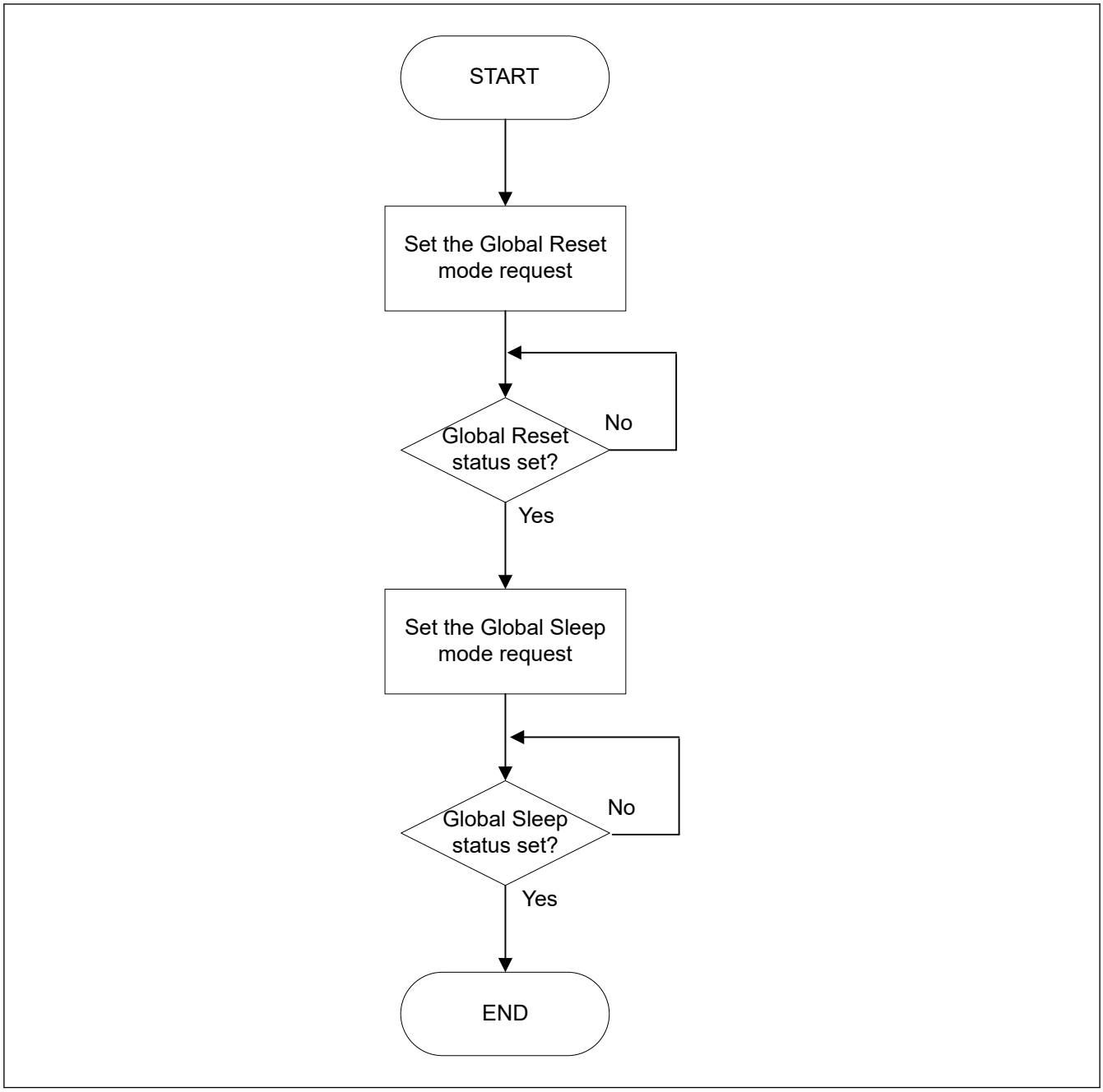

Figure 29.3 Procedure for entering Global Sleep mode

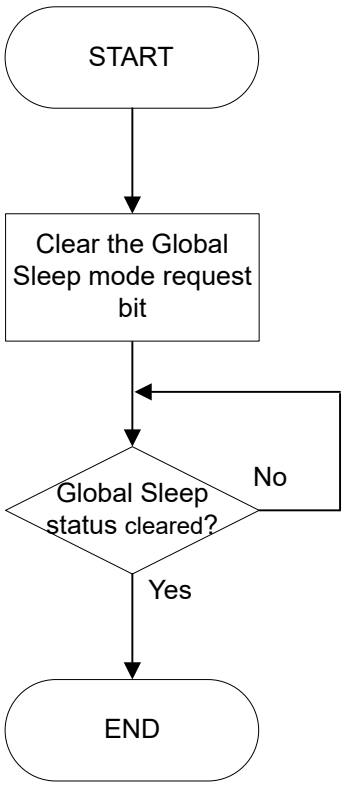

Figure 29.4 Procedure for exiting Global Sleep mode

29.3.2.2 Global Reset Mode

The CANFD module enters this mode in the following ways:

- Global Mode Control bit CFDGCTR.GMDC in the Global Control Register is configured for Global Reset mode while the CANFD module is in Global Halt or Global Operation mode
- Global Sleep Mode Request bit is cleared while CANFD module is in Global Sleep mode.

In Global Reset mode, all CANFD module functions are suspended and all status and flag registers are initialized.

Additionally all FIFOs and TX Queues are disabled and transmission control bits are cleared.

Configuration registers (except the test mode registers) are not initialized in this mode to their MCU reset values and the CANFD module can be configured.

See section 29.3.4. Global Mode and Channel Mode Transition Interactions for a detailed description of the behavior of all registers when transition to Global Reset mode is performed.

Setting the Global mode to Reset by setting the Global Mode Control bits CFDGCTR.GMDC in the Global Control Register to 01b sets Channel Mode Control bits CFDC0CTR.CHMDC in the Channel Control Registers to 01b and forces the channel into the Channel Reset mode.

For channels that are already in Channel Reset mode or Channel Sleep mode, this automatic transition is not performed (CFDC0CTR.CHMDC of related channel already set to 01b).

After setting Global Mode Control bit CFDGCTR.GMDC to Reset mode, it is necessary to confirm that the Reset Mode Status bit CFDGSTS.GRSTSTS in the Global Status Register has been updated, indicating successful transition to Global Reset mode before CFDGCTR.GMDC can be changed again.

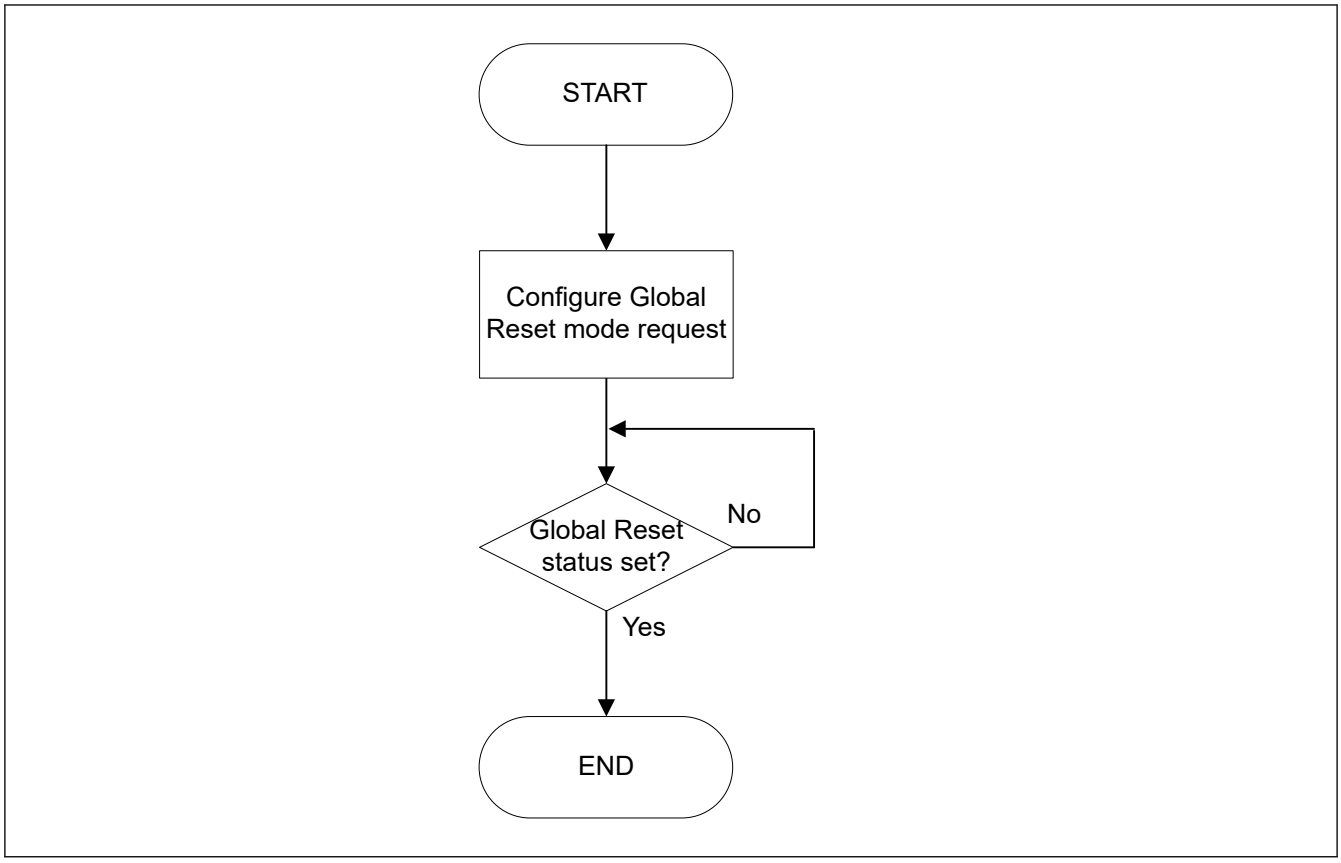

Figure 29.5 Procedure for entering Global Reset mode

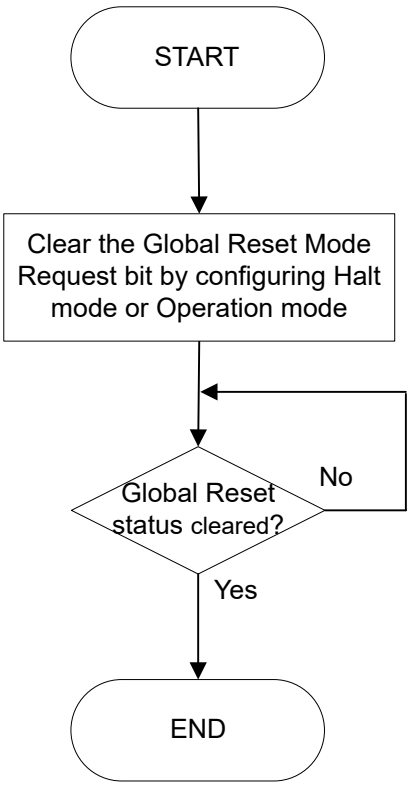

Figure 29.6 Procedure for exiting Global Reset mode

29.3.2.3 Global Halt Mode

The CANFD module enters this mode in the following ways:

- Global Mode Control bit CFDGCTR.GMDC in the Global Control Register is configured for Global Halt mode while the CANFD module is in Global Reset mode:
  - the channel in either Channel Reset or Channel Sleep mode remains in this mode
- Global Mode Control bit CFDGCTR.GMDC in the Global Control Register is configured for Global Halt mode while the CANFD module is in Global Operation mode:
  - the channel in Channel Reset, Channel Halt, or Channel Sleep mode remains in this mode
  - the channel in Channel Operation mode transitions to Channel Halt mode
  - Global Halt Mode Status bit is set when the channel has left Channel Operation mode.

If a transmission or reception is ongoing for a channel, the transition to Channel Halt mode is delayed until completion of the communication.

Similarly, if a channel is in bus-off, the full bus-off recovery sequence may be delayed depending on the channel configuration.

In Global Halt mode, all communications are suspended and CANFD logic does not cause any change to the Status and Flag registers (only when a channel is in the bus-off that its REC and TEC values are cleared). Additionally, the test mode configuration and control registers are not initialized in this mode.

The Global Halt mode should be used to configure global module test modes.

See section 29.3.4. Global Mode and Channel Mode Transition Interactions for a detailed description of the behavior of all registers when transition to Global Halt mode is performed.

Setting the Global mode to Halt by setting the Global Mode Control bit CFDGCTR.GMDC in the Global Control Register to 10b sets Channel Mode Control bits CFDC0CTR.CHMDC in the Channel Control Registers to 10b for the channel that are in Channel Operation mode and forces these channels into the Channel Halt mode.

For the channel that are already in Channel Reset, Channel Halt, or Channel Sleep mode, this automatic transition is not performed.

Therefore, the Global Halt mode request can be used to shut down all CANFD channel communications without loss of messages and disruption on the related CAN bus (no interruption of reception/transmission processes on the channels).

After setting the Global Mode Control bit CFDGCTR.GMDC to Halt mode, it is necessary to confirm that the Halt Mode Status bit CFDGSTS.GHLTSTS in the Global Status Register has been updated to indicate a successful transition to Global Halt mode. Do not specify any other SFR setting until confirming CFDGSTS.GHLTSTS is set.

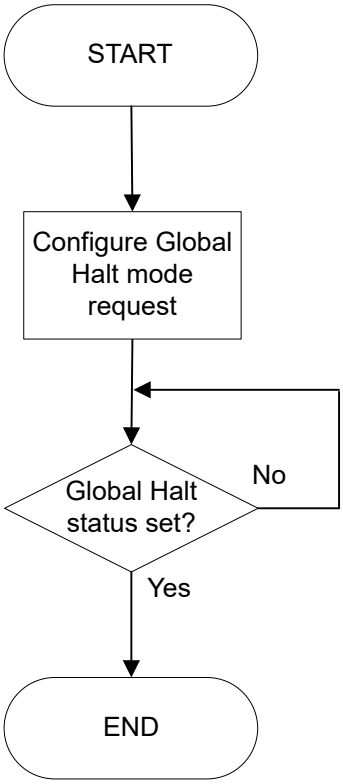

Figure 29.7 Procedure for entering Global Halt mode

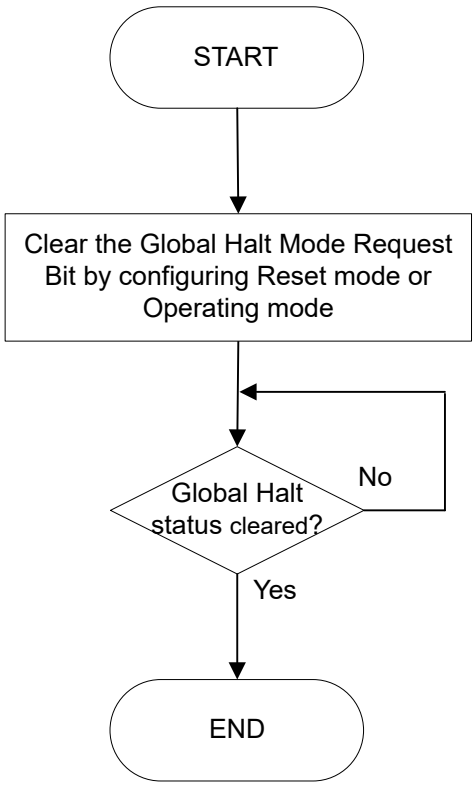

Figure 29.8 Procedure for exiting Global Halt mode

29.3.2.4 Global Operation Mode

The CANFD module enters this mode when the Global Mode Configuration bits are set to Global Operation mode.

The CANFD channel can only be set to Channel Operation mode and start CAN communication when CANFD is in Global Operation mode.

After setting the Global Mode Control bit CFDGCTR.GMDC to Global Operation mode, it is necessary to confirm that the Global Reset Mode Status bit CFDGSTS.GRSTSTS and the Global Halt Mode Status bit CFDGSTS.GHLTSTS in the Global Status Register have been cleared to indicate a successful transition to Global Operation mode before CFDGCTR.GMDC can be modified again.

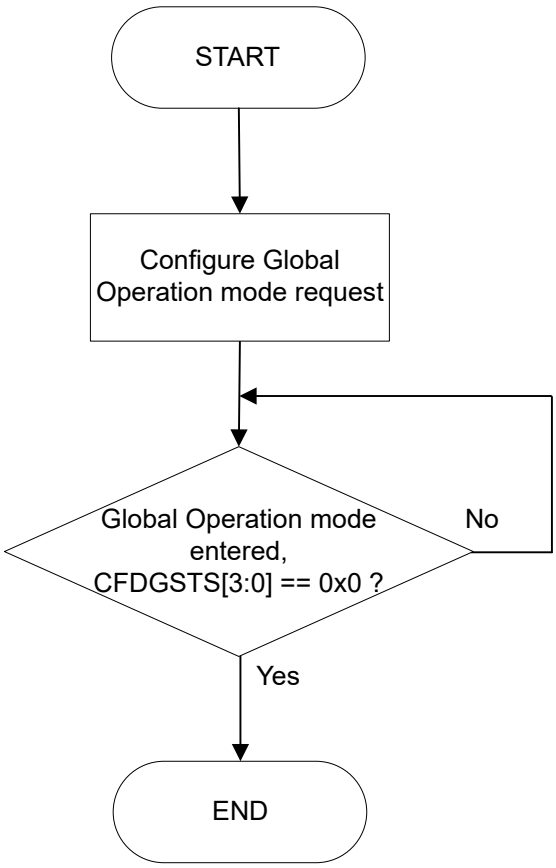

Figure 29.9 Procedure for entering Global Operation mode

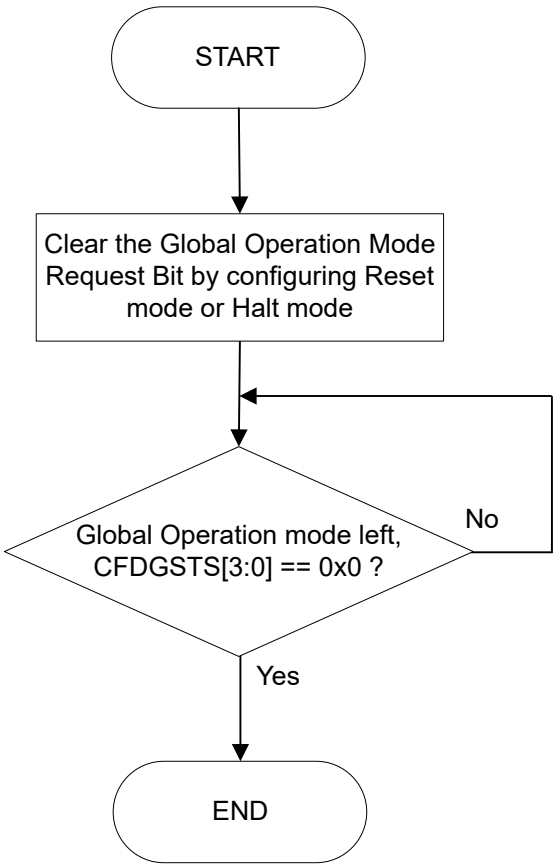

Figure 29.10 Procedure for exiting Global Operation mode

29.3.3 Channel Modes

A CAN channel can be in one of the following four channel modes:

- Reset
- Halt
- Operation
- Sleep.

Figure 29.11 shows the possible transitions between the channel modes.

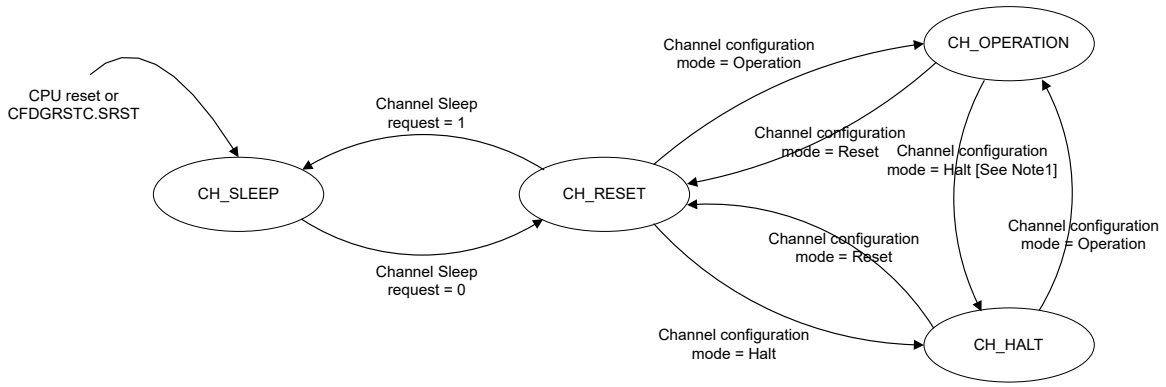

Note 1. The transition timing depends on BOM setting in the Channel Configuration Register:
- when BOM = 01b, the state transition timing is immediate after entering bus-off state
- when BOM = 10b, the state transition timing is at the end of bus-off state
- when BOM = 11b, the state transition timing is matching with the setting of CHMDC to Halt mode.

Figure 29.11 Transition between CAN channel modes

29.3.3.1 CAN Channel Sleep Mode

After the release of a hardware reset or after setting and clearing the CFDGRSTC.SRST bit, a CAN channel of the CANFD module automatically enters Channel Sleep mode.

A CAN channel also enters Channel Sleep mode when the related Channel Sleep Mode Request bit is set while the CAN channel is in Channel Reset mode. Do not set this control bit in Channel Halt mode or Channel Operation mode.

Entering the CAN Channel Sleep mode instantly stops the clock supplied to the CAN channel unit and therefore reduces power consumption.

After setting the Channel Sleep Mode Request bit, it is necessary to confirm that the Channel Sleep mode status has been updated to indicate a successful transition to Channel Sleep mode before the Channel Sleep Mode Request bit can be cleared again.

During Channel Sleep mode, do not write to channel related registers. Read operation is still possible.

29.3.3.2 CAN Channel Reset Mode

A CANFD CAN channel enters this mode in the following ways:

- Channel Mode Control bit CFDC0CTR.CHMDC in the Channel Control Registers is configured for Channel Reset mode while the related CAN channel is in Channel Halt mode or Channel Operation mode
- Channel Sleep Mode Request bit is cleared while the related CAN channel is in Channel Sleep mode
- Global Mode Control bit CFDGCTR.GMDC is set to Global Reset mode and CAN channel is not in Channel Sleep mode or Channel Reset mode.

In Channel Reset mode, all CAN channel status and flag registers are initialized.

Additionally all channel related transmission control bits are cleared and the channel related TX Queue is disabled.

Configuration registers (except the Channel Test Mode registers) are not initialized in this mode and the CAN channel can be configured for communication.

See section 29.3.4. Global Mode and Channel Mode Transition Interactions for a detailed description of the behavior of all registers when transition to Channel Reset mode is performed.

After setting the Channel Mode Control bit CFDC0CTR.CHMDC to Channel Reset mode, it is necessary to confirm that the Reset Mode Status bit CFDC0STS.CRSTSTS in the related Channel Status Registers has been updated to indicate a successful transition to Channel Reset mode before the related CFDC0CTR.CHMDC bit can be modified again.

See Table 29.16 for the behavior of transitioning to Channel Reset mode while CAN communication is ongoing.

29.3.3.3 CAN Channel Halt Mode

A CANFD CAN channel enters this mode in the following ways:

- Channel Mode Control bit CFDC0CTR.CHMDC in the Channel Control Registers is configured for Channel Halt mode while the related CAN channel is in Channel Reset mode or Channel Operation mode
- Global Mode Control bit CFDGCTR.GMDC is set to Global Halt mode and CAN channel is in Channel Operation mode.

In Channel Halt mode, all channel CAN communication is suspended but all status and flag registers remain unchanged during Channel Halt mode entry (except for the bus-off case where REC and TEC values are cleared for this channel).

In addition, the Channel Test Mode Configuration and Control registers are not initialized in this mode.

The Channel Halt mode should be used to configure channel test modes.

See section 29.3.4. Global Mode and Channel Mode Transition Interactions for a detailed description of the behavior of all registers when transition to Channel Halt mode is performed.

After setting the Channel Mode Control bit CFDC0CTR.CHMDC to Channel Halt mode, it is necessary to confirm that the Halt Mode Status bit CFDC0STS.CHLTSTS in the related Channel Status Register has been updated to indicate a successful transition to Channel Halt mode before the related CFDC0CTR.CHMDC can be modified again.

See Table 29.16 for the transition behavior to Channel Halt mode while CAN communication is ongoing.

Table 29.16 Transition behavior in CAN Reset mode and Halt mode

Mode	State		
	Receiver	**Transmitter**	**Bus-Off**
CAN Channel Reset mode (CFDC0CTR.CHMDC = 01b)	The CAN channel enters Channel Reset mode without waiting for the completion of the ongoing reception.*1	The CAN channel enters Channel Reset mode without waiting for the completion of the ongoing transmission.*1	The CAN channel enters Channel Reset mode without waiting for the completion of the bus-off recovery.
CAN Channel Halt mode (CFDC0CTR.CHMDC = 10b)	CAN channel enters Channel Halt mode at the end of the ongoing reception or error.*2	CAN channel enters Channel Halt mode after completion of the ongoing transmission.	When CFDC0CTR.BOM is set to 00b, a Channel Halt mode request is accepted only after the completion of the full bus-off recovery sequence. When CFDC0CTR.BOM is set to 10b, the CAN channel transits automatically to Channel Halt mode after waiting for the completion of the bus-off recovery. When CFDC0CTR.BOM is set to 01b, the CAN channel transits automatically to Channel Halt mode without waiting for the completion of the bus-off recovery. When CFDC0CTR.BOM is set to 11b, the CAN channel enters Channel Halt mode as soon as Channel Halt mode is requested (without waiting for the completion of the bus-off recovery).

Note 1. If the entry to Channel Reset mode is required only at the end of an ongoing communication, then Channel Halt mode can be requested first to prevent interruption of CAN communication by direct transition to Channel Reset mode. After the CAN channel enters Channel Halt mode, the Channel Reset mode can be requested.

Note 2. If CAN communication is locked at dominant level after an error flag, software can detect this situation by monitoring the channel related BusLock flag and resolve lock condition by setting the CAN channel to Channel Reset mode.

29.3.3.4 CAN Channel Operation Mode

The Channel Operation mode is activated by setting the CFDC0CTR.CHMDC bits to 00b. If 11 consecutive recessive bits are detected after entering the CAN Operation mode, the CFDC0STS.COMSTS bit is set and the CAN channel:

- Enables the functions of the channel communication by allowing the channel to become an active node on the CAN network
- Releases the internal fault confinement logic including receive and transmit error counters

At this point, the CAN channel can start transmission and reception of CAN messages.

Within the CAN Channel Operation mode, the channel may be in four different sub-modes, depending on which type of communication functions are performed (see Figure 29.12):

- Channel idle: The CAN channel is neither receiving nor transmitting
- Channel receives: The channel is receiving a CAN message sent by another CAN node
- Channel transmits: The channel is transmitting a CAN message

  Note: The channel may receive its own message simultaneously when Self-test mode is enabled.
- Channel is in bus-off state: The CAN channel is cut-off from CAN bus communication.

After setting the Channel Mode Control bit CFDC0CTR.CHMDC to Channel Operation mode, it is necessary to confirm that the Channel Reset Mode Status bit CFDC0STS.CRSTSTS and the Channel Halt Mode Status bit CFDC0STS.CHLTSTS in the Channel Status Register have been updated to indicate a successful transition to Channel Operation mode before the related CFDC0CTR.CHMDC bit can be changed again.

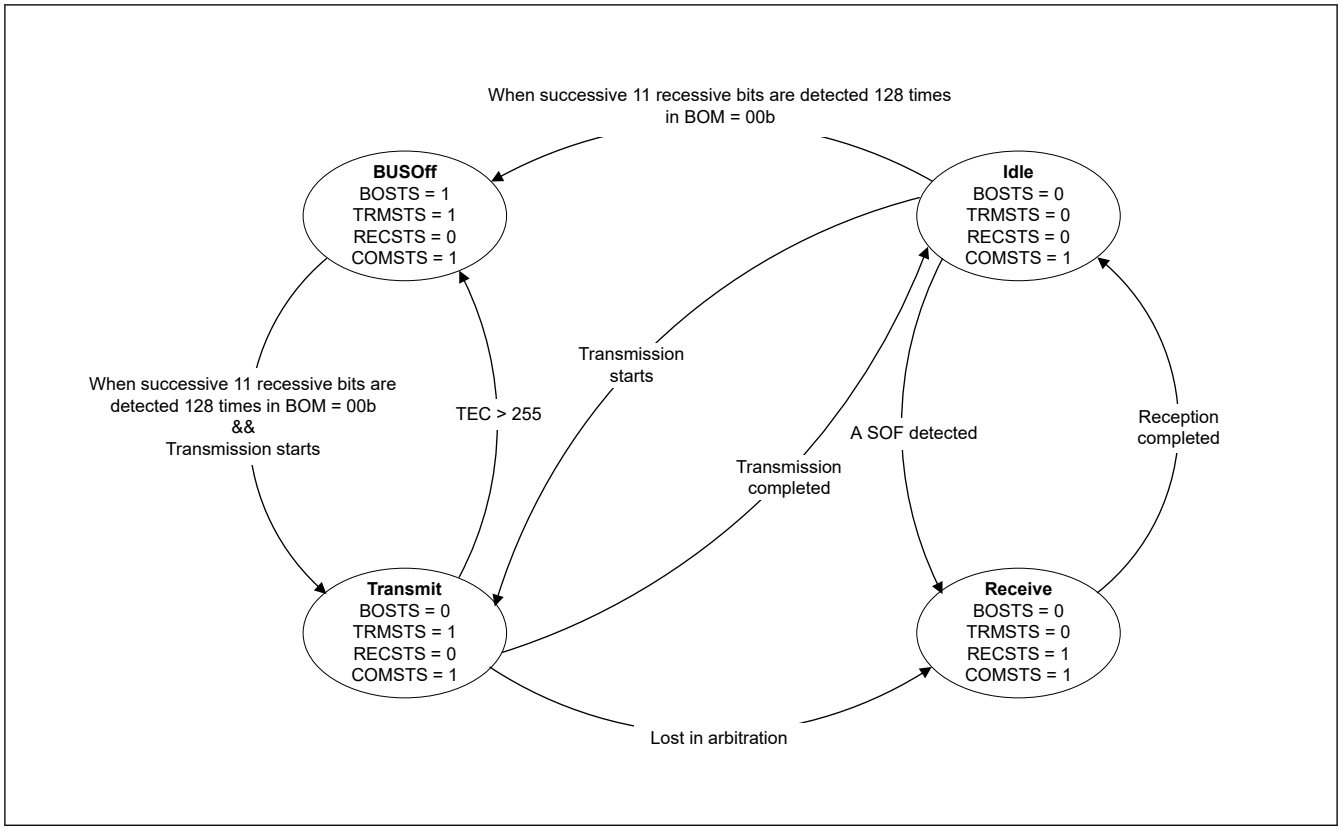

Figure 29.12 Sub-modes of CAN Channel Operation mode (only when BOM = 00b)

29.3.3.5 CAN Channel Bus-Off State

The CAN channel bus-off state is entered according to the fault confinement rules of the CAN specification. The following modes can be configured for returning to the CAN Channel Operation mode from the bus-off state:

- CFDC0CTR.BOM = 00b:
  Bus-Off recovery is compliant to ISO 11898-1, namely the CAN channel re-enters CAN communication (error active state) after 11 consecutive recessive bits are detected 128 times. TEC and REC counters are initialized to 0. The Bus-Off Recovery Flag CFDC0ERFL.BORF is set in this case.
- CFDC0CTR.BOM = 01b:

The CAN channel changes the value of the CFDC0CTR.CHMDC bits within the CAN Channel Control Register to 10b and switches immediately to Channel Halt mode automatically after entering bus-off state. TEC and REC counters are initialized to 0 and the Bus-Off Recovery Flag CFDC0ERFL.BORF is not set in this case.

- CFDC0CTR.BOM = 10b:
  The CAN channel changes the value of the CFDC0CTR.CHMDC bits within the CAN Channel Control Register to 10b as soon as it reaches bus-off state and enters Channel Halt mode automatically after the CAN channel has completed the bus-off recovery sequence (after 11 consecutive recessive bits are detected 128 times). TEC and REC counters are initialized to 0 and the Bus-Off Recovery Flag CFDC0ERFL.BORF is set in this case.
- CFDC0CTR.BOM = 11b:
  Bus-off recovery is initiated but CAN channel can immediately enter Channel Halt mode when still in bus-off state if a request is made to enter Channel Halt mode.
  TEC and REC counters are initialized to 0 and the Bus-Off Recovery Flag CFDC0ERFL.BORF is not set.
  Without setting CFDC0CTR.CHMDC [1:0] = 10b and when 11 recessive bits is detected 128 times continuously, transition conditions become the same as CFDC0CTR.BOM = 00b.

Note: If the recovery from bus-off occurs normally in this mode (after waiting for 128 sequences of 11 consecutive recessive bits), and no halt request has been generated during this period, then the Bus-Off Recovery flag CFDC0ERFL.BORF is set.

When software writes to the CFDC0CTR.CHMDC bit at the same time as the CAN channel enters Halt mode (at the start of bus-off when CFDC0CTR.BOM = 01b, or at the end of bus-off when CFDC0CTR.BOM = 10b), the software request has the highest priority.

Note: In the above case, the automatic setting of the CFDC0CTR.CHMDC bit to Channel Halt mode request is performed when the CFDC0CTR.CHMDC bit value is previously 00b (Channel Operation mode).

Additionally, it is possible to force the CAN channel to recover from the bus-off state by setting CFDC0CTR.RTBO to 1. The error state changes from bus-off state to integrating state with a maximum delay of 1 CAN bit time, and the CAN communication becomes possible again after 11 consecutive recessive bits are detected. The Bus-Off Recovery Flag is not set in this case, and the TEC and REC counters are initialized to 0.

Before setting CFDC0CTR.RTBO to 1, all pending transmissions from the TX message buffers, TX Queues and/or Common FIFO in TX mode should be disabled.

The disable of the pending transmission message buffer, TX Queue or FIFO must be confirmed by the corresponding acknowledge flags.

For the TX message buffer, the acknowledge flags are the Transmission Result Flags (CFDTMSTSj.TMTRF). For the TX Queue, it is the TX Queue Empty flag (CFDTXQSTS.TXQEMP). For the FIFO, it is the FIFO Empty flag (CFDCFSTS.CFEMP).

The CFDC0CTR.RTBO bit should be used for bus-off recovery only when CFDC0CTR.BOM is set to 00b.

Setting this bit in any state other than bus-off has no effect and the bit is cleared immediately.

Table 29.17 shows the settings for the Bus-Off Entry flag CFDC0ERFL.BOEF and the Bus-Off Recovery flag CFDC0ERFL.BORF for the different configurations of CFDC0CTR.BOM.

Table 29.17 Behavior of Bus-off Entry and Recovery flags

BOM	BOEF bit set	BORF bit set
00b	Always (on entry to bus-off)	Always (on exit from bus-off)
00b CFDC0CTR.RTBO set to 1	Always (on entry to bus-off)	Only if normal bus-off recovery occurs before software sets CFDC0CTR.RTBO to 1
01b	Always (on entry to bus-off)	Never
10b	Always (on entry to bus-off)	Always (on exit from bus-off)
11b	Always (on entry to bus-off)	Only if normal bus-off recovery occurs before software issues a Halt request

For an efficient software procedure, it is not necessary to wait for the bus-off recovery sequence to end.

It is possible to perform a transmission re-initialization during bus-off recovery. To do this, follow the recommended software flow in Figure 29.13.

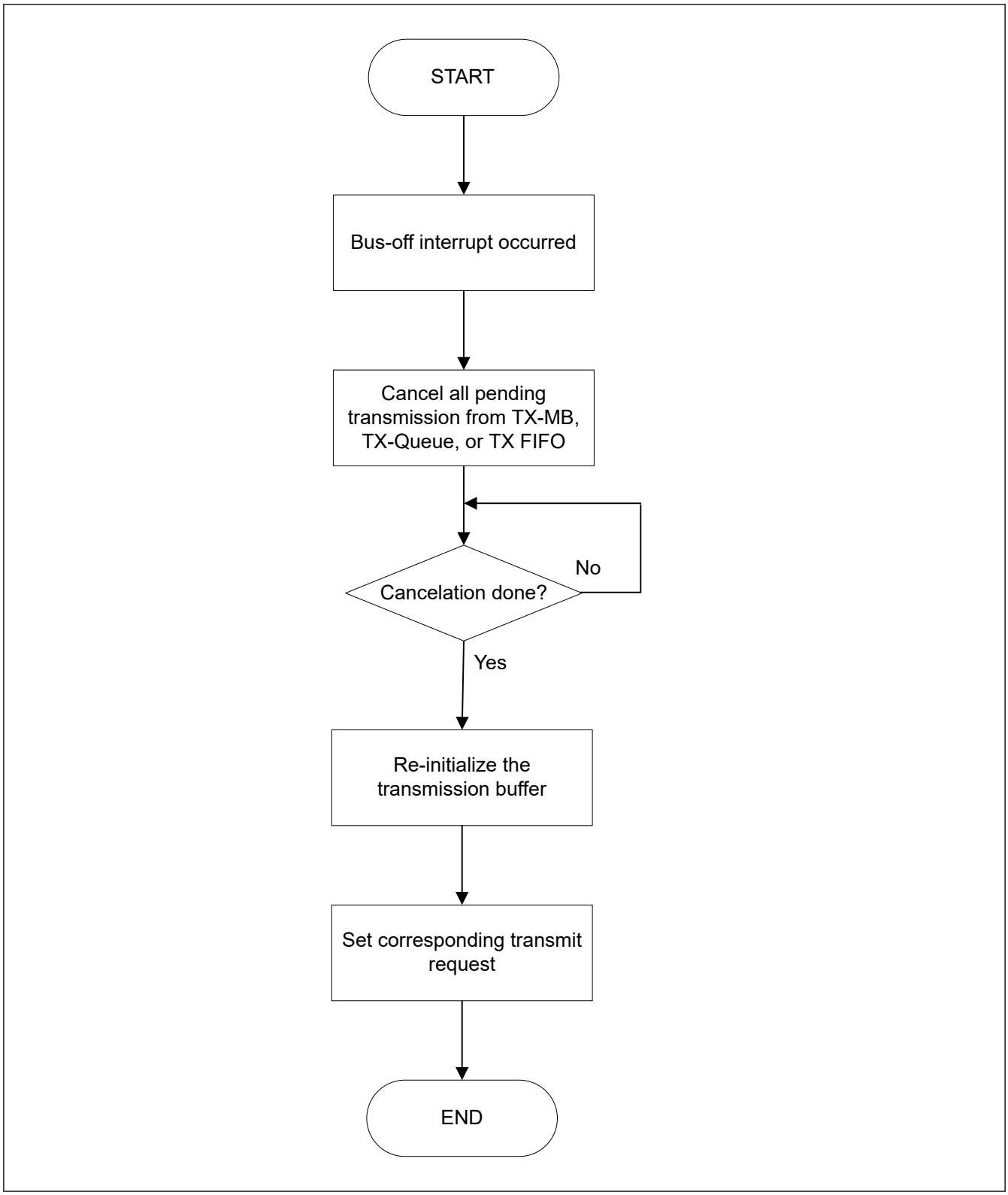

Figure 29.13 Transmission re-initialization during bus-off

29.3.4 Global Mode and Channel Mode Transition Interactions

The interaction between Global mode setting and Channel mode setting is as follows:

- Changing the Channel Mode Control bit CFDC0CTR.CHMDC in the Channel Control Registers does not affect the Global Mode Control bit CFDGCTR.GMDC.
- Changing the Global Mode Control bit CFDGCTR.GMDC affects the channel mode control as described in Table 29.18.

Table 29.18 Interaction between Global and Channel mode transition

Global mode change	Channel mode	Channel mode transition action
Sleep → Reset	Sleep	Channel remains in Sleep mode
Sleep → Halt	— (Global mode change not possible)	
Sleep → Operation	— (Global mode change not possible)	
Reset → Sleep	Sleep	Channel remains in Sleep mode
	Reset	Channel Sleep request bit is set automatically, channel enters Sleep Mode
Reset → Halt	Sleep	Channel remains in Sleep mode
	Reset	Channel remains in Reset mode
Reset → Operation	Sleep	Channel remains in Sleep mode
	Reset	Channel remains in Reset mode
Halt → Sleep	— (Global mode change not possible)	
Halt → Reset	Sleep	Channel remains in Sleep mode
	Reset	Channel remains in Reset mode
	Halt	Channel mode control is set to Reset mode, channel enters Reset mode
Halt → Operation	Sleep	Channel remains in Sleep mode
	Reset	Channel remains in Reset mode
	Halt	Channel remains in Halt mode
Operation → Sleep	— (Global mode change not possible)	
Operation → Reset	Sleep	Channel remains in Sleep mode
	Reset	Channel remains in Reset mode
	Halt	Channel mode control is set to Reset mode, channel enters Reset mode
	Operation	Channel mode control is set to Reset mode, channel enters Reset mode
Operation → Halt	Sleep	Channel remains in Sleep mode
	Reset	Channel remains in Reset mode
	Halt	Channel remains in Halt mode
	Operation	Channel mode control is set to Halt mode, channel enters Halt mode after communication finished

29.3.4.1 Timing of Global Mode Change

The transition time for the Global mode changes are shown in the following table.

Table 29.19 Maximum transition time for the global mode (1 of 2)

From	To	Maximum transition time
GL_SLEEP	GL_RESET	3 peripheral clock cycles*2
GL_RESET	GL_SLEEP	3 peripheral clock cycles
GL_RESET	GL_HALT	10 peripheral clock cycles
GL_RESET	GL_OPERATION	10 peripheral clock cycles

Table 29.19 Maximum transition time for the global mode (2 of 2)

From	To	Maximum transition time
GL_HALT	GL_RESET	2 CAN bit times
GL_HALT	GL_OPERATION	3 peripheral clock cycles
GL_OPERATION	GL_RESET	2 CAN bit times
GL_OPERATION	GL_HALT	3 CAN frames*1 *3

Note 1. The given transition time is the time without any errors on the bus. In case of an error condition, the transition time can lengthen to an uncalculated result. The transition time can also come to a stuck condition for locked RX lines or continued error conditions.
Note 2. Exit GL_SLEEP mode only when CFDGSTS.GRAMINIT is cleared.
Note 3. TQ, CAN frame and CAN bits are related to the individual channels. For the maximum transition time, the channel with the lowest baud rate must be used.

29.3.4.2 Timing of Channel Mode Change

The transition time for the Channel mode changes are shown in the following table.

Table 29.20 Maximum transition time for the channel mode

From	To	max. transition time
CH_SLEEP	CH_RESET	3 peripheral clock cycles
CH_RESET	CH_SLEEP	3 peripheral clock cycles
CH_RESET	CH_HALT	3 CAN bit times
CH_RESET	CH_OPERATION	4 CAN bit times
CH_HALT	CH_RESET	2 CAN bit times
CH_HALT	CH_OPERATION	4 CAN bit times*3
CH_OPERATION	CH_RESET	2 CAN bit times
CH_OPERATION	CH_HALT	2 CAN frames*1 *2

Note 1. The time specified for this transition does not include the case where channel enters bus-off state. For bus-off, the timing depends on the configuration of the CFDC0CTR.BOM[1:0] bits.
Note 2. The given transition time is the time without any errors on the bus. In case of an error condition, the transition time can lengthen to an uncalculated result. The transition time can also come to a stuck condition for locked RX lines or continued error conditions.
Note 3. In general, if the baud rate prescaler value CFDC0NCFG.NBRP is changed in CH_HALT mode, the transition time can deviate. The internal prescaler is a free running down counter that creates the TQ clock, and new BRP value is captured when the counter reaches the value 0.

29.4 Initialization

Before joining CAN communications, configure the following settings:

- Clock setting
- Bit timing setting (nominal and data rate)
- Baud Rate setting (nominal and data rate)
- CANFD setting
- Acceptance Filter setting (configuration of Global Acceptance Filter List)
- Reception, Transmission and GW-FIFO setting
- CAN Operation mode setting

29.4.1 Initialization of CAN Clock, Bit Timing and Baud Rate

29.4.1.1 Bit Timing Conditions

The following lines describe the composition of each segment and the restriction that apply to the segment setting.

1. Each segment setting
   SS = Fixed to 1 TQ

TSEG1 = See to (CFDC0NCFG) and (CFDC0DCFG)*1
TSEG2 = See to (CFDC0NCFG) and (CFDC0DCFG)*1
SJW = See to (CFDC0NCFG) and (CFDC0DCFG)*1
SS + TSEG1 + TSEG2 = 5 to 49 TQs for Data Bit Rate and 8 to 385 for Nominal Bit Rate

2. Restriction on TSEG1, TSEG2 and SJW
   TSEG1(N) > TSEG2(N) ≥ SJW(N)
   TSEG1(D) ≥ TSEG2(D) ≥ SJW(D)*1
   When only classical frames are used, configure the bit fields TSEG1 and TSEG2 of CFDC0DCFG to valid values.

Note 1. This feature is not available in the classical CAN function.

Table 29.21 shows an example of how to set the bit timing to achieve the required Sample Point settings.

Table 29.21 Bit timing examples

1 bit	Set value (TQ)				Sample point (%)
	SS	TSEG1	TSEG2	SJW	
5TQ	1	2	2	1	60.00
8TQ	1	4	3	1	62.50
	1	5	2	1	75.00
10TQ	1	6	3	1	70.00
	1	7	2	1	80.00
12TQ	1	8	3	1	75.00
	1	9	2	1	83.33
15TQ	1	10	4	1	73.33
	1	11	3	1	80.00
16TQ	1	10	5	1	68.75
	1	11	4	1	75.00
20TQ	1	12	7	1	65.00
	1	13	6	1	70.00
24TQ	1	15	8	1	66.66
	1	16	7	1	70.83
50TQ	1	39	10	4	80.00

Figure 29.14 Sample point (in case of 75%)

29.4.1.2 CAN Bit Timing

In the CAN protocol, each bit in a communication frame is composed of three segments that can be configured individually for channel using the related CFDC0NCFG and CFDC0DCFG[*1] registers.

Note 1. This register is not available in the classical CAN function.

Figure 29.15 shows the segment composition of a bit and the sample point in it.

Of these segments, the Time Segment 1 (TSEG1) and Time Segment 2 (TSEG2) are used to specify the position of the sample point, so that the timing at which each bit on the CAN bus is sampled can be altered by changing the values of these segments.

The minimum resolution for this timing is referred to as Time Quantum (TQ), which is determined by the clock frequency supplied to the CAN channel and the divide-by-N value of the baud rate prescaler (nominal and data rate).

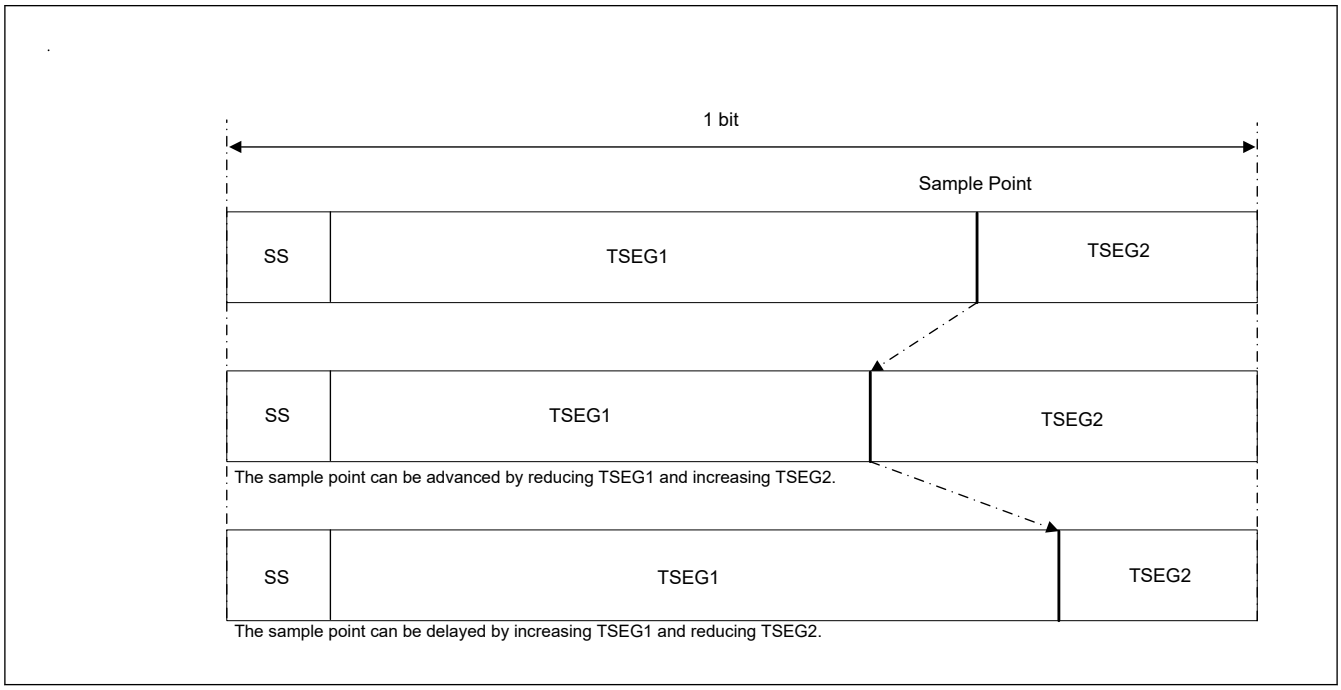

Figure 29.15 Segment composition of a bit and the sample point

1. SS: Synchronization Segment
   This segment is used to synchronize bits by monitoring a recessive-to-dominant edge during the interframe space. This comprises of intermission, suspend transmission, bus idle, during bus idle, and all nodes that can start transmission.
2. TSEG1: Time Segment 1
   This segment absorbs physical delays on the CAN network. A physical delay on the network is two times the total sum of a bus delay, input comparator delay, and output driver delay. It can be lengthened by SJW.
3. TSEG2: Time Segment 2
   This segment is used to correct a phase error by performing resynchronization. It can be shortened by SJW. While sending or receiving a message, communication frames between some nodes may get out of sync due to a drift in the oscillator frequency or a delay in the transmission path. This is referred to as a phase error.
4. SJW: Resynchronization Jump Width
   This is the maximum width by which bits that have become out of sync due to a phase error may be corrected.

Figure 29.15 shows only one symbolic sample point.

29.4.1.3 Baud Rate

Either the CANFD core clock (CANFDCLK) or the external oscillator clock (CANMCLK) can be selected globally as CAN communication clock.

The transfer speed is determined by the DLL clock, the divide-by-N value of the baud rate prescaler, and the number of TQs in one bit.

$$\text{baud rate} = \frac{\text{DLL_Clock}}{(\text{number_of_time_quanta_per_bit}) \times (\text{BRP} + 1)}$$

Figure 29.16 shows a block diagram of the circuit that generates the CAN channel communication clock and Table 29.22 shows a baud rate examples.

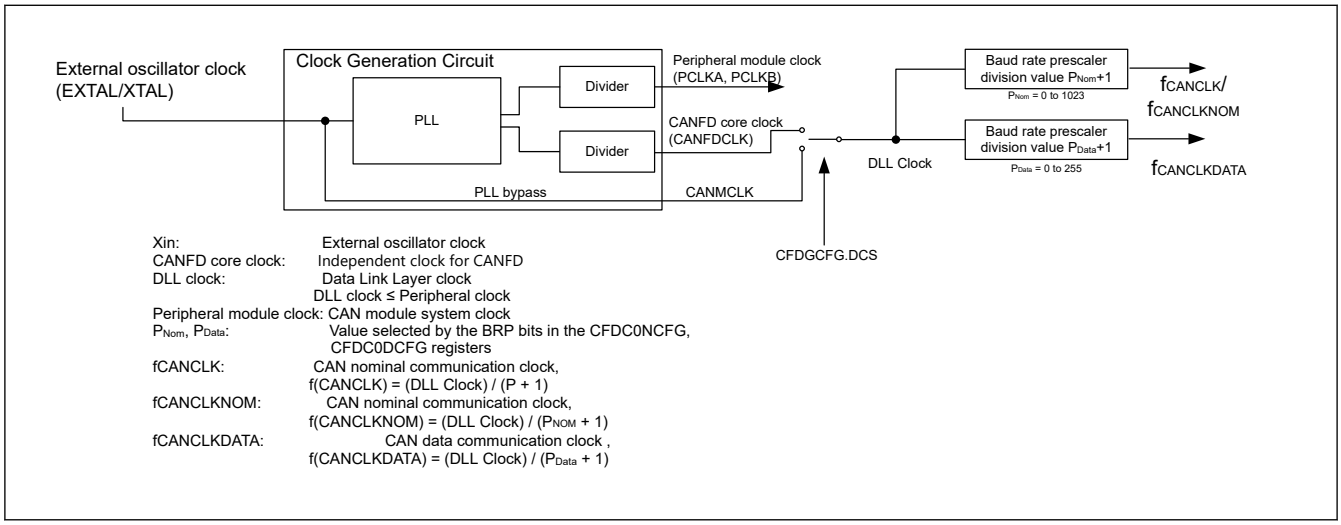

Figure 29.16 Block diagram of the circuit that generates the CAN channel communication clock

Table 29.22 Nominal baud rate calculation formula and example CAN communication configurations

Baud rate calculation formula	(DLL clock) (baud rate prescaler divide-by-N value*1) × (number of TQs in one bit)							
	40 MHz	32 MHz	30 MHz	24 MHz	20 MHz	16 MHz	10 MHz	8 MHz*2
1 Mbps	8TQ (5) 20TQ (2)	8TQ (4) 16TQ (2)	10TQ (3) 15TQ (2)	8TQ (3) 12TQ (2) 24TQ (1)	10TQ (2) 20TQ (1)	8TQ (2) 16TQ (1)	10TQ (1)	8TQ (1)
500 Kbps	8TQ (10) 20TQ (4)	8TQ (8) 16TQ (4)	10TQ (6) 15TQ (4) 20TQ (3)	8TQ (6) 12TQ (4) 24TQ (2)	10TQ (4) 20TQ (2)	8TQ (4) 16TQ (2)	10TQ (2) 20TQ (1)	8TQ (2) 16TQ (1)
250 Kbps	8TQ (20) 20TQ (8)	8TQ (16) 16TQ (8)	10TQ (12) 15TQ (8) 20TQ (6)	8TQ (12) 12TQ (8) 24TQ (4)	10TQ (8) 20TQ (4)	8TQ (8) 16TQ (4)	10TQ (4) 20TQ (2)	8TQ (4) 16TQ (2)
125 Kbps	8TQ (40) 20TQ (16)	8TQ (32) 16TQ (16)	10TQ (24) 15TQ (16) 20TQ (12)	8TQ (24) 12TQ (16) 24TQ (8)	10TQ (16) 20TQ (8)	8TQ (16) 16TQ (8)	10TQ (8) 20TQ (4)	8TQ (8) 16TQ (4)
83.3 Kbps	8TQ (60) 12TQ (40) 16TQ (30) 24TQ (20)	8TQ (48) 12TQ (32) 16TQ (24) 24TQ (16)	8TQ (45) 10TQ (36) 12TQ (30) 15TQ (24) 20TQ (18) 24TQ (15)	8TQ (36) 12TQ (24) 16TQ (18) 24TQ (12)	8TQ (30) 10TQ (24) 12TQ (20) 15TQ (16) 16TQ (15) 20TQ (12) 24TQ (10)	8TQ (24) 12TQ (16) 16TQ (12) 24TQ (8)	8TQ (15) 10TQ (12) 12TQ (10) 15TQ (8) 20TQ (6) 24TQ (5)	8TQ (12)
33.3 Kbps	8TQ (150) 12TQ (100) 16TQ (75) 20TQ (60) 24TQ (50)	8TQ (120) 10TQ (96) 12TQ (80) 15TQ (64) 16TQ (60) 20TQ (48) 24TQ (40)	10TQ (90) 12TQ (75) 15TQ (60) 20TQ (45)	8TQ (90) 10TQ (72) 12TQ (60) 15TQ (48) 16TQ (45) 20TQ (36) 24TQ (30)	8TQ (75) 10TQ (60) 12TQ (50) 15TQ (40) 20TQ (30) 24TQ (25)	8TQ (60) 10TQ (48) 12TQ (40) 15TQ (32) 16TQ (30) 20TQ (24) 24TQ (20)	10TQ (30) 12TQ (25) 15TQ (20) 20TQ (15)	8TQ (30)

Note: Shown in ( ) are the baud rate prescaler divide-by-N value.
Note 1. Baud rate prescaler divide-by-N value = P + 1 (P = 0 - 1023) P: value selected by the BRP bits in the Channel Configuration Registers.
Note 2. Minimum frequency to achieve maximum nominal baud rate of 1 Mbps.

Table 29.23 Baud rate calculation example for nominal and data bit rate CAN communication configurations

Baud rate calculation formula	(DLL clock) (baud rate prescaler divide-by-N value*1) × (number of TQs in one bit)	
	40 MHz	**20 MHz**
Nominal 1 Mbps Data 8 Mbps	40TQ (1)	20TQ (1)
	5TQ (1)	Not possible
Nominal 1 Mbps Data 5 Mbps	40TQ (1)	20TQ (1)
	8TQ (1)	Not possible
Nominal 500 Kbps Data 2 Mbps	80TQ (1)	40TQ (1)
	20TQ (1)	10TQ (1)

Note: Shown in ( ) are the baud rate prescaler divide-by-N values and this table is not available in the classical CAN function.
Note 1. Baud rate prescaler divide-by-N value = P + 1 (P = 0 - 1023) P: value selected by the BRP bits in the Channel Configuration Registers.

For optimum clock tolerance in networks using the FD frame format, the length of the time quantum should be the same in nominal bit time and in data bit time. This means CFDC0NCFG.NBRP = CFDC0DCFG.DBRP.

Additionally, if transceiver delay compensation is used, do not program the CFDC0DCFG.DBRP bit to be greater than 1, as 1 means divide by 2.

29.4.1.4 Setting of CAN Clock, Bit Timing and Baud Rate

Figure 29.17 shows the procedure for setting the CAN clock and the baud rate for a channel.

These settings should be performed during Channel Reset mode (Configuration mode) for the CAN channels.

Before going to channel communication state, the baud rate must be configured, otherwise the mode does not switch correctly.

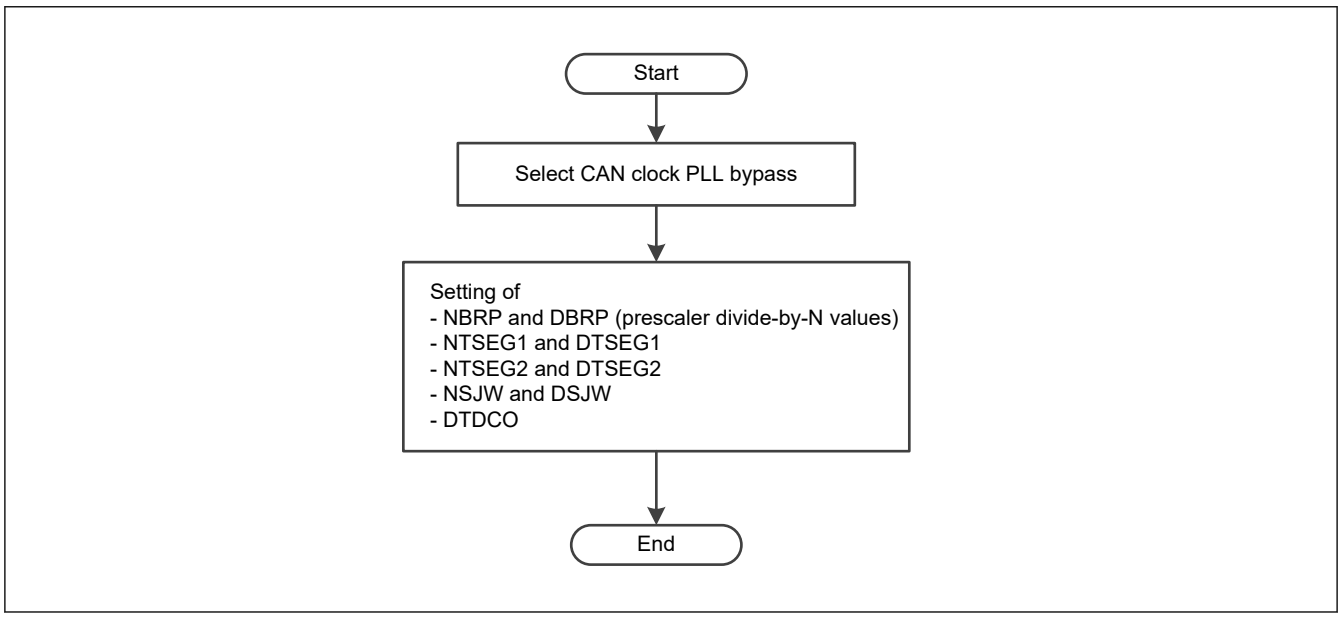

Figure 29.17 Procedure for setting the CAN bit timing and baud rate

29.4.1.5 Transmitter Delay Compensation

This chapter is not valid for classical CAN.

When a high baud rate is used such as 5 to 8 Mbps for the data phase, the transmitter delay can become greater than TSEG1. In this case, the transmitter always detects a bit-error in the data phase of the CANFD frame. The TDC compensates for the inability of the transmitter to receive its own transmitted bit at the sample point of that bit.

There is another symbolic sample point known as the Secondary Sample Point (SSP) that is used only during the data phase of CANFD frames. This is derived from the Transceiver Delay Compensation Result bit (CFDC0FDSTS.TDCR) as shown in Figure 29.18.

The resolution of the configuration, measured and offset values is based on the CAN channel DLL clock.

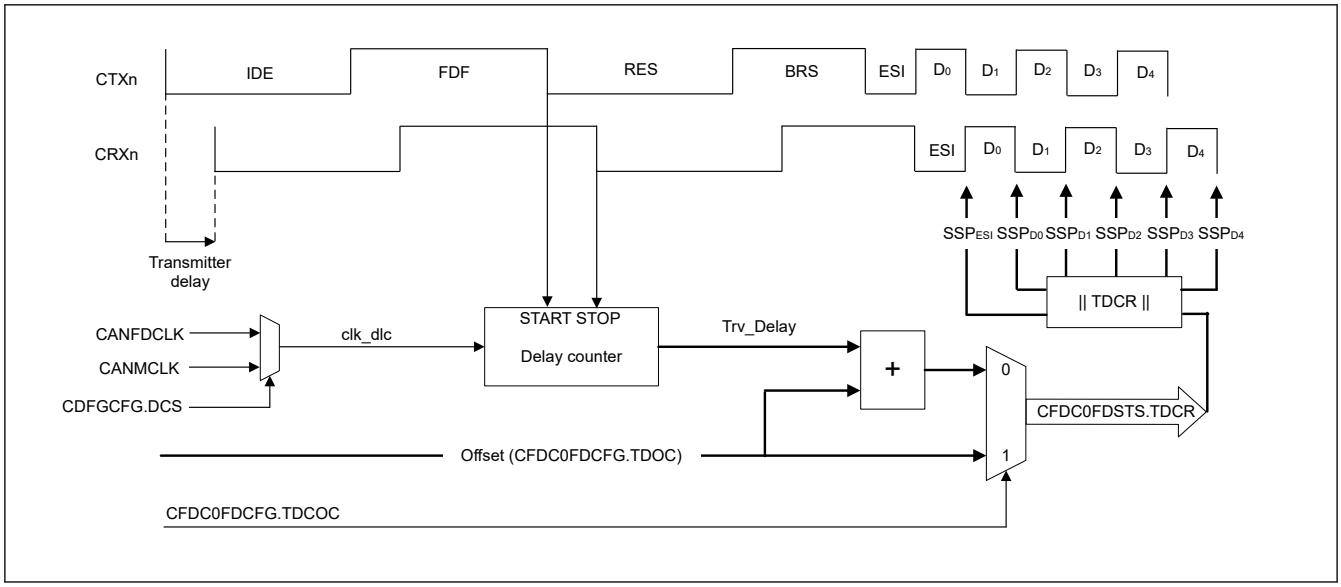

Figure 29.18 Transmitter delay compensation

The measured Trv_Delay is based on the number of clk_dlc clock cycles. The delay is counted up by one for each started clock until the dominant value is seen on CRXn. Figure 29.19 shows the measured result. Trv_Delay counted to maximum 127 with a clk_dlc clock.

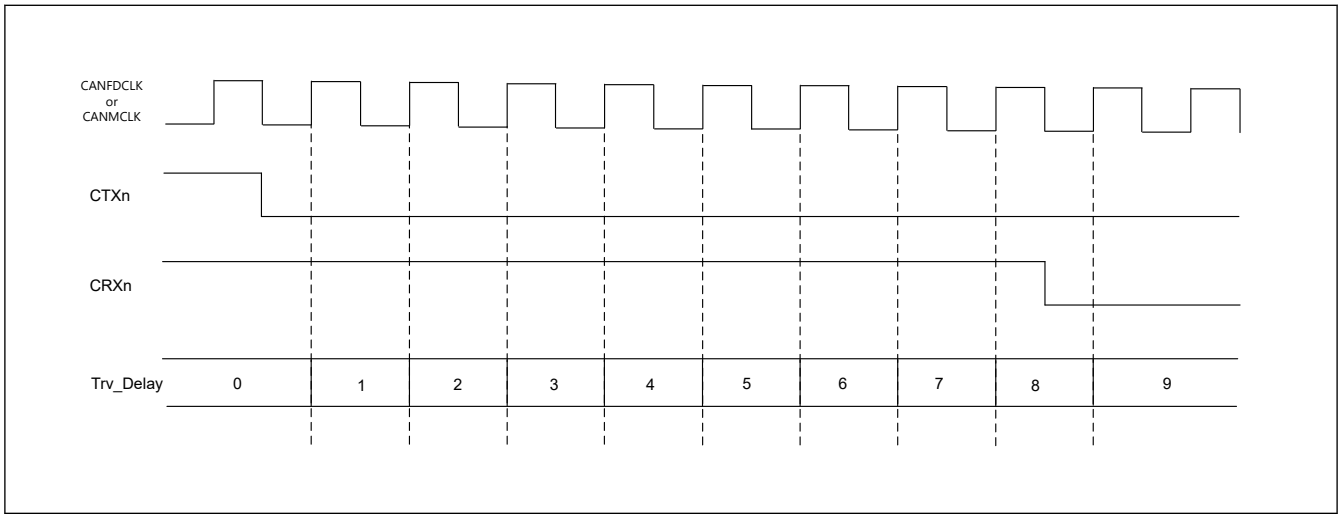

Figure 29.19 Trv_Delay measurement example

The SSP is calculated by taking the result from CFDC0FDSTS.TDCR and rounding the value down to the nearest integer number of data time quanta.

Figure 29.20 shows the positioning of the secondary sample point. When CFDC0FDCFG.TDCOC is equal to 0, the SSP is equal to the Trv_Delay (measured delay) + CFDC0FDCFG.TDCO, rounded down to the nearest integer number of time quanta. Usually, the TDCO value should have the size of (SyncSegmentdata + TSEG1data) to position the SSP to a theoretical location of the sample point.

If the CFDC0FDCFG.TDCOC is equal to 1, the SSP is defined by CFDC0FDCFG.TDCO. If CFDC0DCFG.DBRP is greater than 0, the value is also rounded down to the nearest integer number of time quanta.

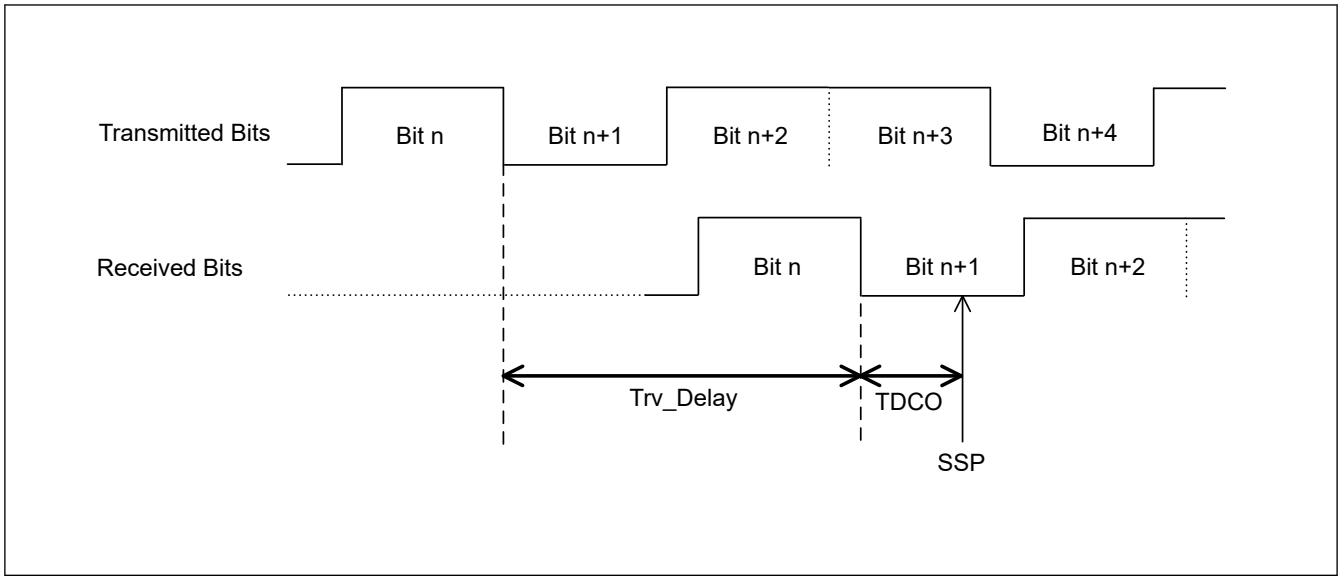

Figure 29.20 Position of the secondary sample point

The maximum delay (Trv_Delay + TDCO) which can be compensated by the CANFD module is (6 data bits - 2clk_dlc).

The ISO 11898-1 allows you to set different values for BRP_data and BRP_nom.

If different values are used for CFDC0NCFG.NBRP and CFDC0DCFG.DBRP, then two CAN nodes may be out of synchronization at the point when the bit rate changes from nominal bit rate to data bit rate after sample point of the BRS bit. This condition is shown in Figure 29.21.

The length of the time quantum should be the same in the nominal bit time and in the data bit time. This means CFDC0NCFG.NBRP = CFDC0DCFG.DBRP.

Different bit rates can be achieved by selecting different configuration values for the Time Segments. The nominal bit rate can be configured from 8 to 385 TQs and the data bit rate from 5 to 49 TQs.

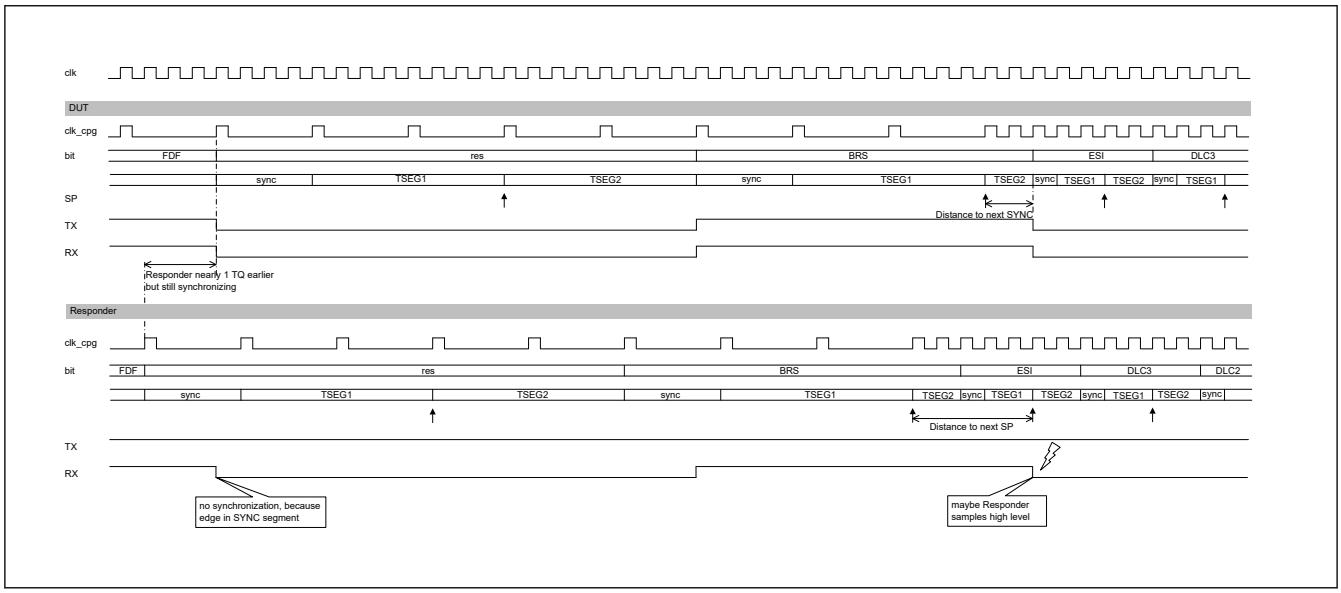

Figure 29.21 Loss of synchronization between two CAN nodes

The transmitter delay compensation measurement result is updated at the falling edge from FDF bit to RES bit when configured accordingly (CFDC0FDCFG.TDCE = 1, CFDC0FDCFG.TDCOC = 0).

Figure 29.22 shows the read flow to get the measured transmitter delay compensation result.

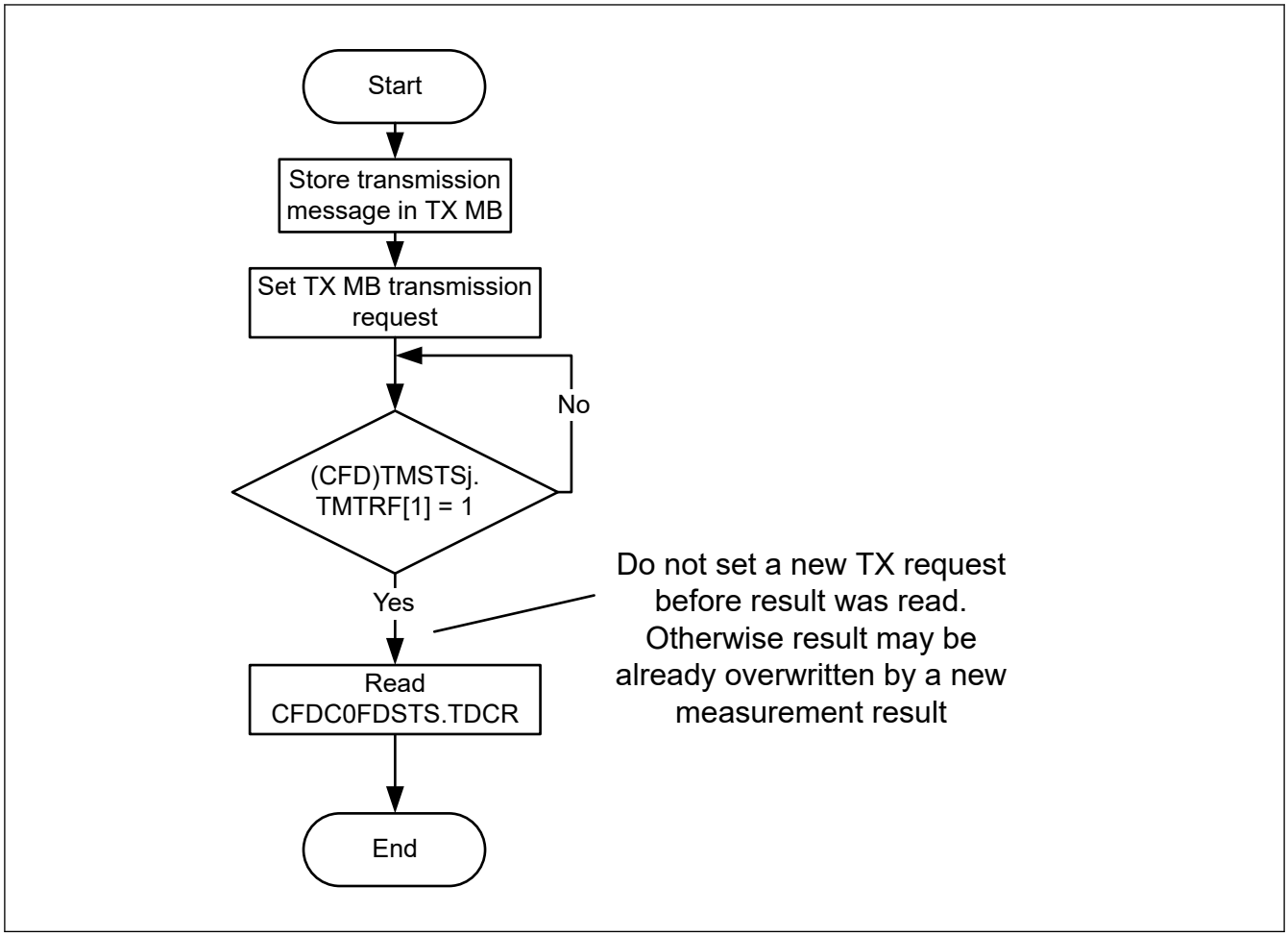

Figure 29.22 TDC result read flow

29.4.2 CAN Module Configuration after Hardware Reset

After a hardware reset (power on reset) or after setting and clearing a CFDGRSTC.SRST bit, the CANFD module enters Global Sleep mode automatically.

To enable configuration of the CANFD module, you must exit Sleep mode by clearing the Global Sleep Request bit CFDGCTR.GSLPR to 0.

After a hardware reset, the module starts RAM initialization, the CFDGSTS.GRAMINIT bit in the Global Status Register is set automatically to indicate that the CANFD logic is initializing the RAM.

After RAM initialization is complete, this bit is cleared automatically.

RAM initialization is necessary to avoid setting of false ECC error flag after HW reset the random data presented in the RAM.

Do not access registers of CANFD in either read or write until RAM initialization is complete and the CFDGSTS.GRAMINIT bit is cleared.

Before going to communication mode, the Global Acceptance Filter List and message FIFO buffers must be configured. In addition, CAN channel must be configured such as CAN bit timing. For this configuration, CAN channel must be released from Channel Sleep mode and must be configured for communication in Channel Reset mode (Configuration mode).

Figure 29.23 shows the configuration procedure. For details about each step, see section 29.5. Acceptance Filtering Function using Global Acceptance Filter List (AFL), section 29.6. FIFO Buffers and Normal Message Buffer Configuration, section 29.7. Interrupts and DMA and section 29.4.1.3. Baud Rate.

The CANFD module does not perform the RAM initialization sequence after executing a software reset by setting CFDGRSTC.SRST.

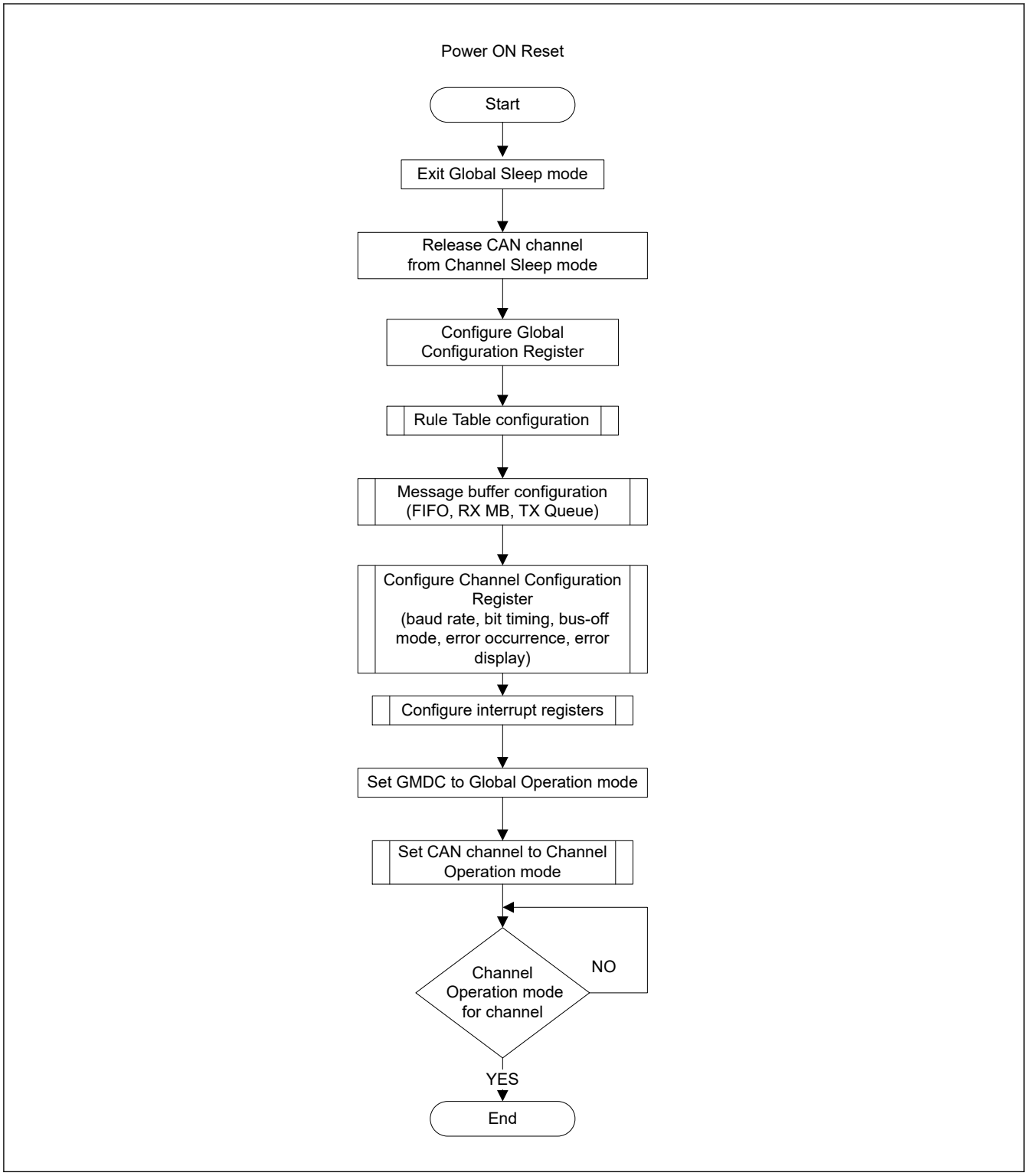

Figure 29.23 Configuration procedure after a hardware reset

29.5 Acceptance Filtering Function using Global Acceptance Filter List (AFL)

29.5.1 Overview

The CANFD module can handle message acceptance filtering with a global Acceptance Filter List (called AFL). Each element of the AFL defines a filter rule for messages received on a specific channel.

The following actions are performed based on the AFL entries:

- Acceptance filtering based on received CAN Identifier and masking
- DLC filtering based on received DLC value
- Message data payload according to the CFDGCFG.CMPOC bit*1
- Storage of accepted messages in the message buffer objects defined in the related AFL entry
- Attaching a 16-bit pointer to the stored messages defined in the related AFL entry, for example to support AUTOSAR applications
- Attaching a 2-bit information label to the stored messages defined in the related AFL entry

Note 1. This feature is not available in the classical CAN function.

The CANFD module allows a maximum of 16 AFL entries.

During acceptance filtering process, each AFL entry in a channel is checked against the received message by the acceptance filter unit. The check starts from the lowest AFL entry number for this channel.

AFL search stops when a match of the received identifier with a configured identifier/mask combination occurs or when the received identifier has been compared against all AFL entries defined for the related channel. If no match occurs, then the received message is rejected. No notification is given to the application in this case.

Additionally, an automatic DLC filtering is performed for each accepted message if DLC check is globally enabled. If the DLC value of the received message is equal to or higher than the configured DLC value in the matching AFL entry, the DLC check is passed.

If DLC replacement (CFDGCFG.DRE bit) is enabled, DLC value configured in the matching AFL entry is greater than 0x0 and DLC check passes, then the configured value of DLC in the matching AFL entry is stored in the destination RXMB or FIFO Buffer.

If the received value of DLC is greater than the configured DLC value in the matching AFL entry, then the additional data bytes received on the CAN Bus are not stored in the destination RXMB or FIFO Buffer. These additional data bytes are stored as 0x00 in the destination RXMB or FIFO Buffer.

If DLC replacement is enabled and DLC value of matching AFL entry is 0x0, then the received value of DLC is stored in the destination RX MB or FIFO Buffer.

If DLC replacement (the CFDGCFG.DRE bit) is disabled and DLC check passes, then the received value of DLC on the CAN bus is stored in the destination RXMB or FIFO buffer.

If the received value of DLC is greater than the configured DLC value in the matching AFL entry, then the additional data bytes received from the CAN bus are also stored in the destination RXMB or FIFO buffer.

If DLC value of the received message is less than the configured DLC value in the matching AFL entry, then DLC check fails. In this case, the received message is rejected and is not stored in any RXMB or FIFO buffer.

Additionally, DLC check failure is flagged by the DLC Error Flag in the Global Error Flag Register. If configured, an error interrupt is also generated. The DLC replacement configuration has no impact if the DLC check fails.

If a message has passed both acceptance filtering and DLC filtering, it is stored in a single reception message buffer and/or in FIFO buffers configured for reception function.

This message storage target information is also defined in the same AFL entry. Do not set a target at the AFL entry which is not configured.

Each accepted received message can be stored into a maximum of 2 different target destinations (single reception message buffer and/or FIFO buffers).

The programming of more than 2 target destinations is not allowed. If more destinations are programmed, then the internal timing might lead to a race condition that prevents the storage of received messages in the message RAM.. Correct configuration of the numbers of target destination is the responsibility of the application.

Additional protection mechanism is made for the case when a received message contains more data payload Bytes than possible to store in the target destination (CFDRMNB.RMPLS, CFDRFCCa.RFPLS or CFDCFCC.CFPLS).

If CFDGCFG.CMPOC = 0, the message is completely rejected and is stored in the target destination. When CFDGCFG.CMPOC = 0 and RX or Common FIFO full including the received message contains more data payload bytes than possible to store in the target destination (CFDRMNB.RMPLS, CFDRFCCa.RFPLS or CFDCFCC.CFPLS), the corresponding CFDFMSTS.RFxMLT or CFDFMSTS.CFxMLT bit is not set to 1, respectively.

When CFDGCFG.CMPOC = 1, the received data bytes greater than CFDRMNB.RMPLS is rejected. When CFDGCFG.CMPOC = 1 and RX or Common FIFO full including the received message contains more data payload bytes than possible to store in the target destination (CFDRMNB.RMPLS, CFDRFCCa.RFPLS or CFDCFCC.CFPLS), the corresponding CFDFMSTS.RFxMLT or CFDFMSTS.CFxMLT bit is set to 1, respectively.

Depending on the CFDGCFG.DRE bit, the original received DLC or the DLC value configured at the AFL entry is stored.

Regardless of the CFDGCFG.CMPOC bit setting, CFDGERFL.CMPOF is set to 1 if a payload overflow condition is detected.

The DLC filtering is performed before the payload overflow function. So for one reception frame, only one flag can be set at the same time with CFDGERFL.DEF or CFDGERFL.CMPOF[*1].

Note 1. This bit is not available in the classical CAN function.

29.5.2 Allocation of AFL Entries

The number of AFL entries can be configured using the dedicated field in the related Global Acceptance Filter Configuration Registers (see Figure 29.24).

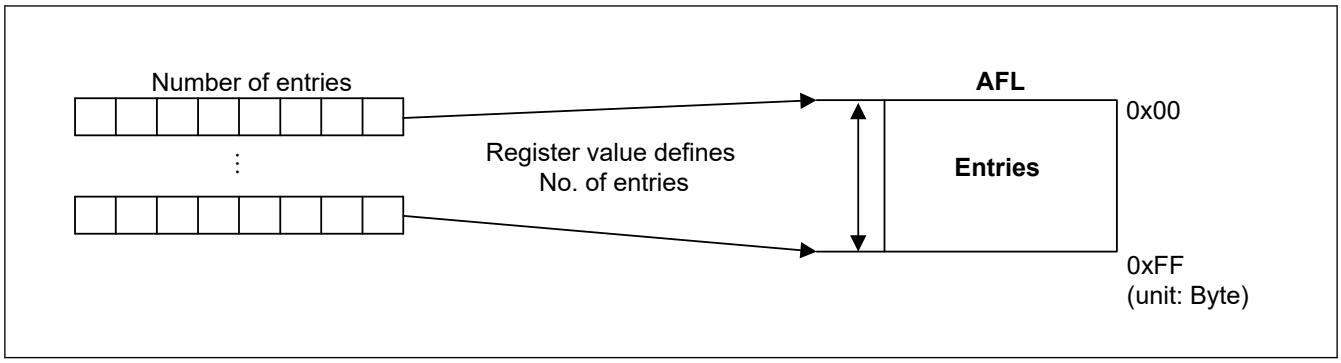

Figure 29.24 Configuration of AFL for each channel

The minimum number of entries for one channel is 0 (no entries defined for the channel) and the maximum number of entries is 16.

All entries are unique for a channel and overlapping or sharing of entries is not supported. Correct configuration of the AFL is the responsibility of the application.

The CANFD module does not flag errors related to the configuration of the AFL.

29.5.3 AFL Entry Description

Each AFL entry consists of 16 bytes. The fields in all entries are identical.

Each entry contains the following information for acceptance filtering and DLC filtering:

- Identifier (11 bits for Standard Frame format, 29 bits for Extended Frame format):
  Acceptance filter unit checks the identifier field of the received message against the identifier field of each AFL entry (full 29 bits masking of identifier bits is possible, see information that follows).

- IDE bit:
  Acceptance filter unit checks the IDE bit of the received message against this bit and selects the relevant part of the identifier field for acceptance filtering (masking of IDE bit is possible, see the information that follows).

- RTR bit:
  Acceptance filter unit only accepts data frames (RTR = 0) or remote frames (RTR = 1) according to the setting of this bit (masking of RTR bit is possible, see the information that follows).

- Loopback Configuration bit:
  This bit can enable or disable the AFL entry depending on the Loopback Configuration or Mirror mode condition.

- Mask for Identifier bits (29 bits):

Each bit in the identifier mask can mask the corresponding identifier bit in the AFL entry during acceptance filtering, see Figure 29.25.

- Mask for IDE bit:
  If this Mask bit masks the IDE bit of the AFL entry in both Standard Identifier and Extended Identifier format, messages can be accepted by this AFL entry. The identifier of the received message is compared against the Standard Identifier part of the AFL entry for Standard Identifier format messages and against the Extended Identifier part of the AFL entry for Extended Identifier format messages.

- Mask for RTR bit:
  If this Mask bit masks the RTR bit of the AFL entry in both frame formats, data frame and remote frame formats are accepted by this AFL entry.

- Pointer information (16 bits):
  This 16-bit pointer is attached to a received message accepted by the related AFL entry. The pointer is added during message storage in the message buffer area and can be used by application as support function. The pointer information can be used for example to support PDU identifier allocation for the received message in AUTOSAR systems.

- Information label (2 bits):
  This 2-bit label is attached to a received message accepted by the related AFL entry. The label is added during message storage in the message buffer area and can be used by application as support function.

- DLC value for automatic DLC filtering:
  If the DLC value of the received message is equal or higher than the configured DLC value, the DLC check is passed.

If the DLC value in this AFL entry is configured to 0, DLC filtering is effectively disabled for this entry (all accepted messages pass DLC filtering).

Each AFL entry contains the following information for the handling of received messages:

- Message buffer number of one single reception message buffer as target for received message storage
- Single reception message buffer enable bit to configure the single reception message buffer number to be valid or invalid, as target for received message storage
- FIFO direction pointer - each bit of the FIFO direction pointer configures a dedicated FIFO as possible target for a received message

There is no hardware protection against such storage of message. Therefore, the FIFO direction pointer must be configured carefully.

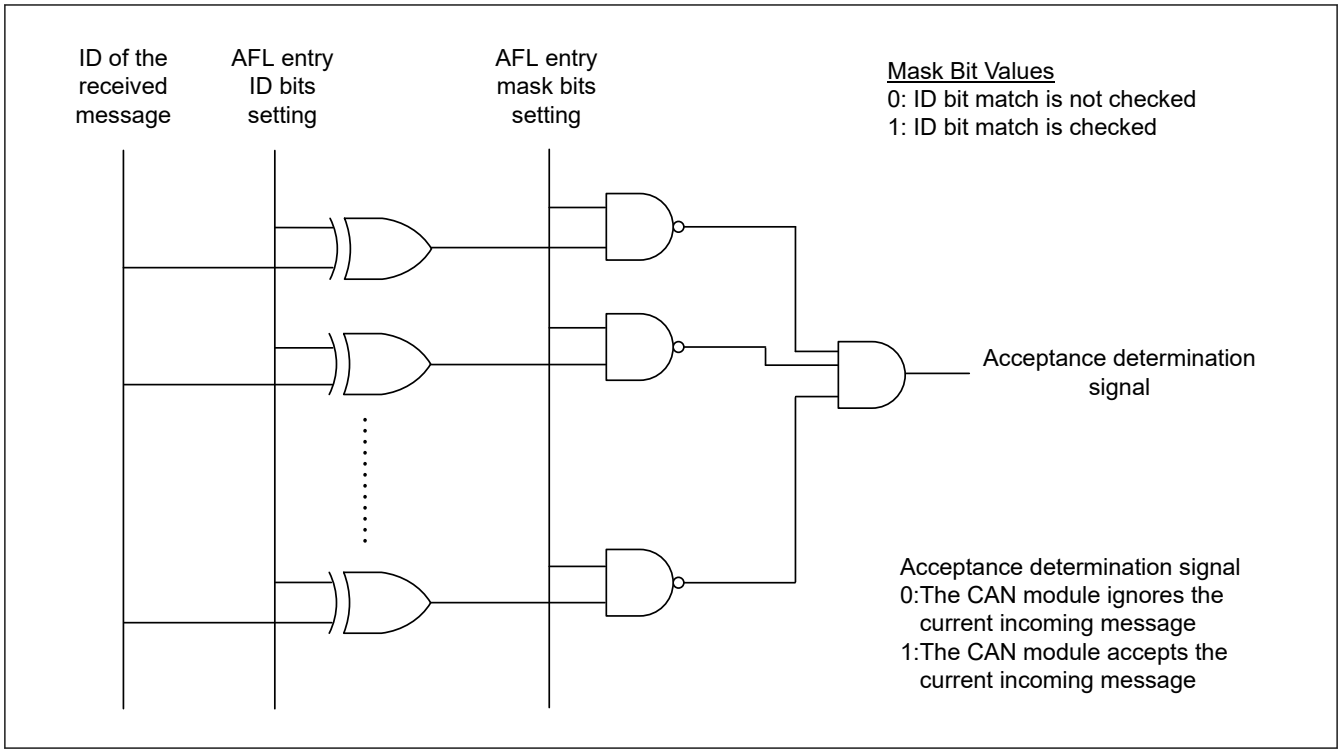

Figure 29.25 Acceptance function

29.5.4 Entering Entries in the AFL

Application software can enter one full entry into the AFL using the following registers:

- Global AFL ID Entry Register: Part 1 of the AFL entry
- Global AFL Mask Entry Register: Part 2 of the AFL entry
- Global AFL Pointer 0 Entry Register: Part 3 of the AFL entry
- Global AFL Pointer 1 Entry Register: Part 4 of the AFL entry.

16 sets of these registers form a group of AFL entries. The AFL should only be configured in CH_RESET or CH_HALT mode.

Follow the configuration shown in Figure 29.26 to program the AFL.

After entering all entries in Configuration mode, locking of the AFL access should be performed to protect unwanted write access to the AFL.

Write protection is active during all Global modes (GL_RESET, GL_HALT, and GL_OPERATION) if the lock bit is set.

Read access to AFL is still possible during all Global modes even when AFL data access is disabled (consistency check of AFL contents is possible during run time).

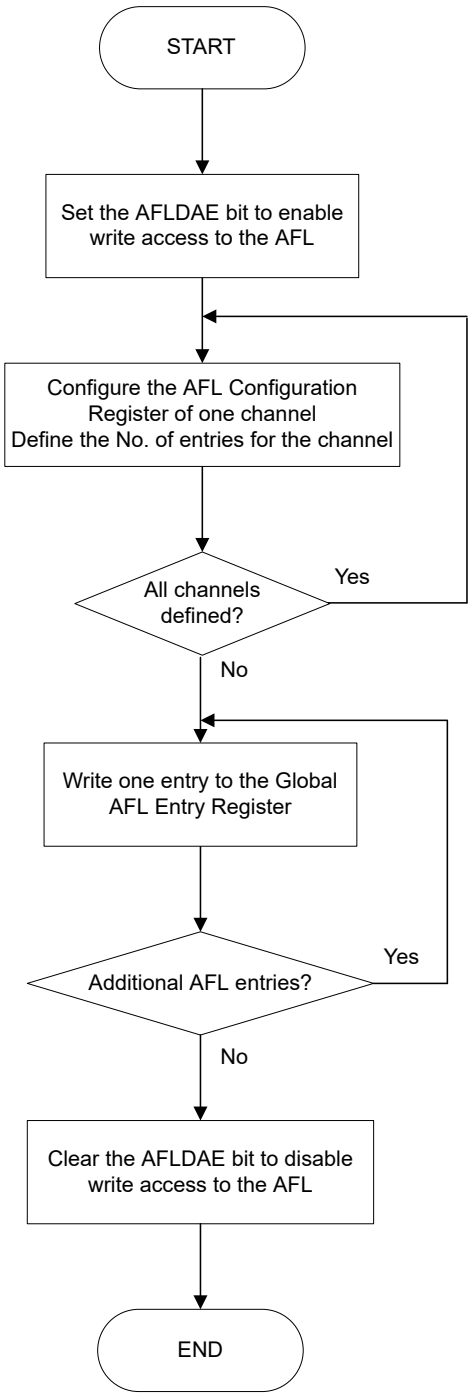

Figure 29.26 AFL configuration flow

29.5.5 Loopback Modes

If the Loopback Configuration bit is set, the AFL entry is only valid in Loopback test mode (Self-test mode 0 or Self-test mode 1) or in mirror mode when receiving messages that were transmitted by the respective CAN channel itself.

The AFL entry is not valid for received messages in loopback mode transmitted by other CAN nodes on the bus. The expression valid or invalid for the related entry means that this AFL entry is or is not compared against the received message ID respectively.

If the Loopback Configuration bit is 0, the AFL entry is only valid for:

- Received messages transmitted by other CAN nodes on the bus in normal (non-loopback mode) and mirror modes
- Received messages transmitted by other CAN nodes or the CAN channel itself in Loopback test mode.

The mirror mode can be enabled with the CFDGCFG.MME bit in the Global Configuration Register. If CFDGCFG.MME bit is set, then a successfully transmitted message can be stored back in an RX message buffer or FIFO buffer if a matching entry is configured in the AFL for that channel.

The Loopback Configuration bit in the matching AFL entry must be set to store this frame.

If Mirror mode and Loopback test mode are configured at the same time, the Loopback test mode behavior applies.

Table 29.24 shows the behavior of the acceptance filter unit depending on the setting of the related input signals.

Table 29.24 Behavior of acceptance filter based on the loopback configuration setting in AFL entry

Mirror Mode Enable (MME Configuration bit)	Loopback in test mode (Self-test mode 0 or Self-test mode 1)	Channel mode	Loopback Configuration bit in AFL entry	AFL entry
0	0	Receiver	0	Valid
			1	Invalid
		Transmitter	0	Invalid
			1	Invalid
	1	Receiver	0	Valid
			1	Invalid
		Transmitter	0	Valid
			1	Valid
1	0	Receiver	0	Valid
			1	Invalid
		Transmitter	0	Invalid
			1	Valid
	1	Receiver	0	Valid
			1	Invalid
		Transmitter	0	Valid
			1	Valid

Note: The expression valid or invalid for the related entry means that this AFL entry is or is not compared against the received message ID, respectively.

29.5.6 IDE Masking

When the GAFLIDEM bit is 0 in an AFL entry, the IDE bit configured in the AFL entry is not used for ID matching. In this case, the use of ID[10:0] or ID[28:0] matching is based on the received IDE bit.

Consider the following example:

- The ID and Mask fields of an AFL entry x is configured as follows:
  - CFDGAFLID [x] = 0xC0553A20 → IDE = 1, RTR = 1, LLB = 0, ID[10:0] = 0x220 / ID[28:0] = 0x00553A20
  - CFDGAFLMr = 0x0000FFFF → IDEM = 0. RTRM = 0, IDM[10:0] = 0x7FF / IDM[28:0] = 0x0000FFFF
- The comparison result for the four different received IDs with AFL entry x is described as follows:
  - If a frame with IDE = 0 and ID = 0x220 is received, this is considered as a match
  - If a frame with IDE = 0 and ID = 0x320 is received, this is not a match
  - If a frame with IDE = 1 and ID = 0x1FFF3A20 is received, this is considered as a match
  - If a frame with IDE = 1 and ID = 0x08803220 is received, this is not a match.

29.5.7 Updating AFL Entry during Communication

You can update the AFL entry without disabling all CAN communications. Choose the entry number to be updated by setting the AFL entry number, and ignore the enable bit.

This entry number is ignored from the AFL matching while the entry is being updated.

Figure 29.27 shows the update flow for an AFL entry.

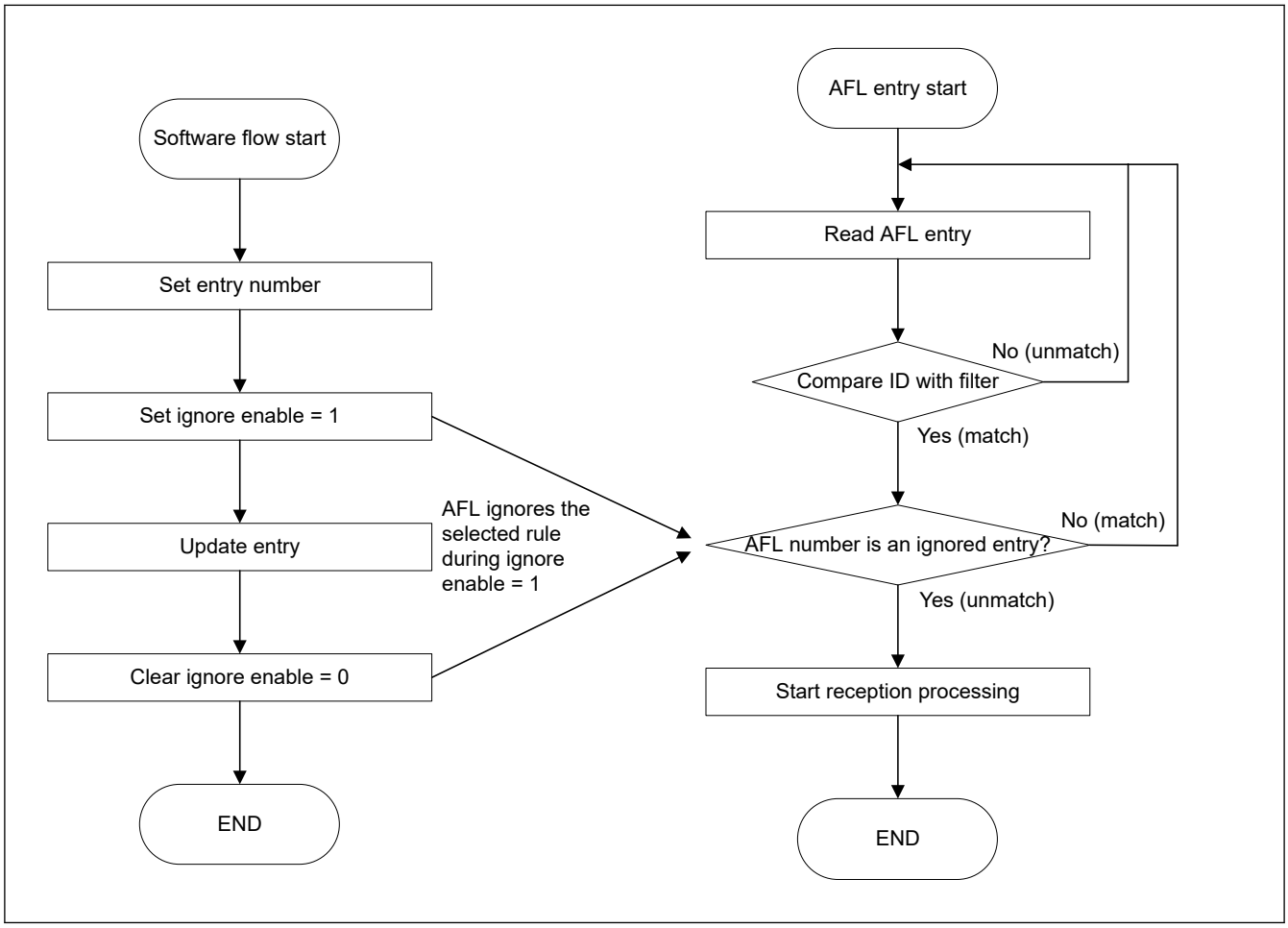

Figure 29.27 Update flow for an AFL entry

The method to update an AFL entry is as follows:

1. Set the entry number to CFDGAFLIGNENT register.
2. Set the value 0xC401 (key code and enable bit) to CFDGAFLIGNCTR register.
3. CFDGAFLECTR.AFLDAE is set to 1.
4. Set the new rule to CFDGAFLIDr, CFDGAFLMr, CFDGAFLP0r, CFDGAFLP1r registers.
5. CFDGAFLECTR.AFLDAE is cleared to 0.
6. Set the value 0xC400 (key code and clear enable bit) to CFDGAFLIGNCTR register.

Note: This entry number is ignored during the periods from (2) to (5).

(1) Example 1: Deleting an entry

Deleting entry3 when the total number of entries is 6 channel.

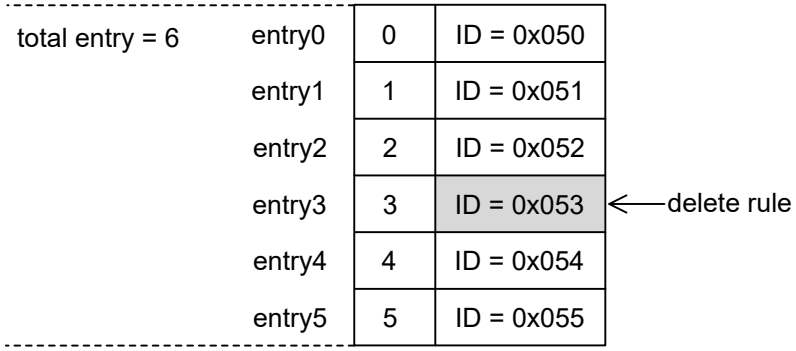

How to delete an entry

1. Set 0x00000003 to CFDGAFLIGNENT register.
2. Set 0x0000C401 to CFDGAFLIGNCTR register.
3. Set 0x00000100 to CFDGAFLECTR register.
4. Set the same rule as the previous rule by accessing CFDGAFLIDr, CFDGAFLMr, CFDGAFLP0r, CFDGAFLP1r (r = 3, this is entry3).
5. Set 0x00000000 to CFDGAFLECTR register.
6. Set 0x0000C400 to CFDGAFLIGNCTR register.

Entry3 is now deleted.

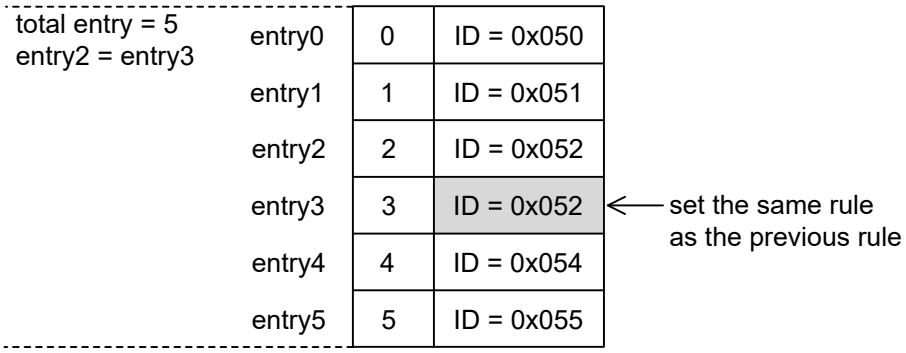

(2) Example 2: Adding an entry

Adding a new entry to entry3 when the total number of entries is 6.

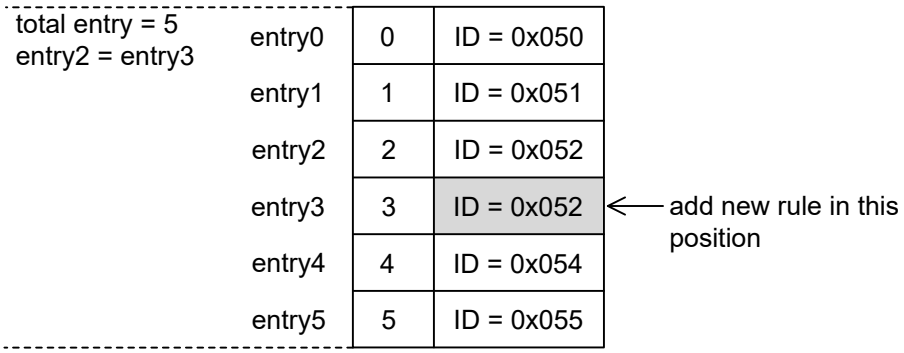

How to add an entry

1. Set 0x00000003 to CFDGAFLIGNENT register.
2. Set 0x0000C401 to CFDGAFLIGNCTR register.
3. Set 0x00000100 to CFDGAFLECTR register.
4. Set the new rule by accessing CFDGAFLIDr, CFDGAFLMr, CFDGAFLP0r, CFDGAFLP1r (r = 3, this is entry3).
5. Set 0x00000000 to CFDGAFLECTR register.
6. Set 0x0000C400 to CFDGAFLIGNCTR register.

The new entry is now added.

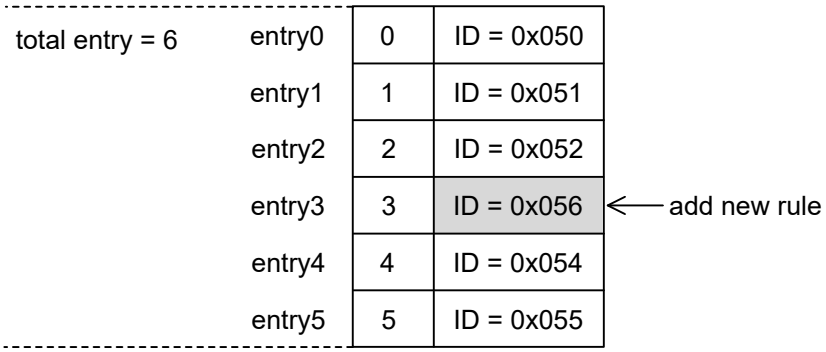

The AFL filter can be used to set CFDGAFLCFG, and addition/deletion of an entry is possible. Therefore, it is necessary to set the maximum number to be used to CFDGAFLCFG.

29.6 FIFO Buffers and Normal Message Buffer Configuration

This section describes the process for configuring the number of RX message buffers, the FIFO buffers, and the flat TX message buffers in the CANFD module. The message buffers are mapped as shown in Figure 29.28.

The RX message buffers can be accessed with the RX Message Buffer Registers.

The RX FIFO buffers and the common FIFO buffers configured in RX mode or TX mode can only be accessed with the FIFO Access Registers.

If the common FIFO is configured in TX mode, you can only write data into the FIFO buffer using the FIFO Access registers.

If the common FIFO is configured in RX mode, you can only read data from the FIFO Access Registers.

The TX message buffers can be accessed with the TX Message Buffer Registers.

If unused message buffer locations are read, the message buffer locations are read as unknown values.

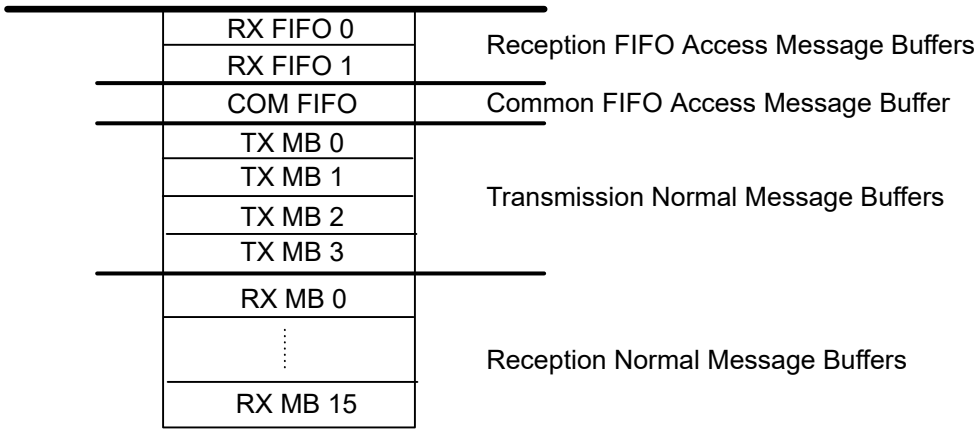

Figure 29.28 Message buffer configuration

29.6.1 Normal RX Message Buffers

In CANFD module, the frames received can be stored in normal RX message buffers based on the configuration of the AFL entries.

Additionally, the number of normal RX message buffers required in the system can be chosen up to a fixed maximum limit.

29.6.1.1 Normal RX Message Buffer Configuration

In CANFD module, the number of normal RX message buffers can be configured by writing to the RX Message Buffer Number Register.

The limiting values for the configuration of number of message buffers are:

- Minimum value = 0x00 (no normal RX MB)
- Maximum value = 0x10

Do not use values outside these limits.

The AFL entries for routing the received messages to normal RX message buffers must be configured to match the requirements of the system.

The AFL entries must also be configured properly, and an AFL entry for normal RX message buffers should not exceed the number of message buffers configured in the RX Message Buffer Number Register.

Note: There is no internal check procedure provided in CANFD module against wrong configuration of the AFL.

The data field size of the RX message buffer can be configured with the CFDRMNB.RMPLS bit. The default size is 8 bytes and the maximum data payload size is 64 bytes.

When the receiving frame exceeds the data field size, then the acceptance depends on the configuration of CFDGCFG.CMPOC (message rejecting or data payload cut).

Note: RMPLS and CMPOC bit is not available in the classical CAN function, so, these feature is not valid for classical CAN.

29.6.2 FIFO Buffers

The CANFD module provides a fixed number of FIFO buffers to support storage of frames for reception and transmission functions .

The number of reception-only FIFO buffers is fixed to 2. However, common FIFO buffer channel can be configured to store messages for transmission or reception function.

These FIFO buffers can be enabled or disabled, and the following parameters can be configured to match the system requirements:

- Size
- Interrupt structure
- Message lost mechanism
- Message overwrite mechanism of the FIFO buffers
- Location of the TX FIFO.

When the receiving frame exceeds the data field size, the acceptance depends on the configuration of the CFDGCFG.CMPOC bit (message rejecting or data payload cut).

29.6.2.1 FIFO Buffers Configuration

In CANFD module, the FIFO buffers can be configured to match the system requirements.

The total number of FIFO buffers = 2 RX FIFO buffers + 1 common FIFO buffer = 3 FIFO buffers.

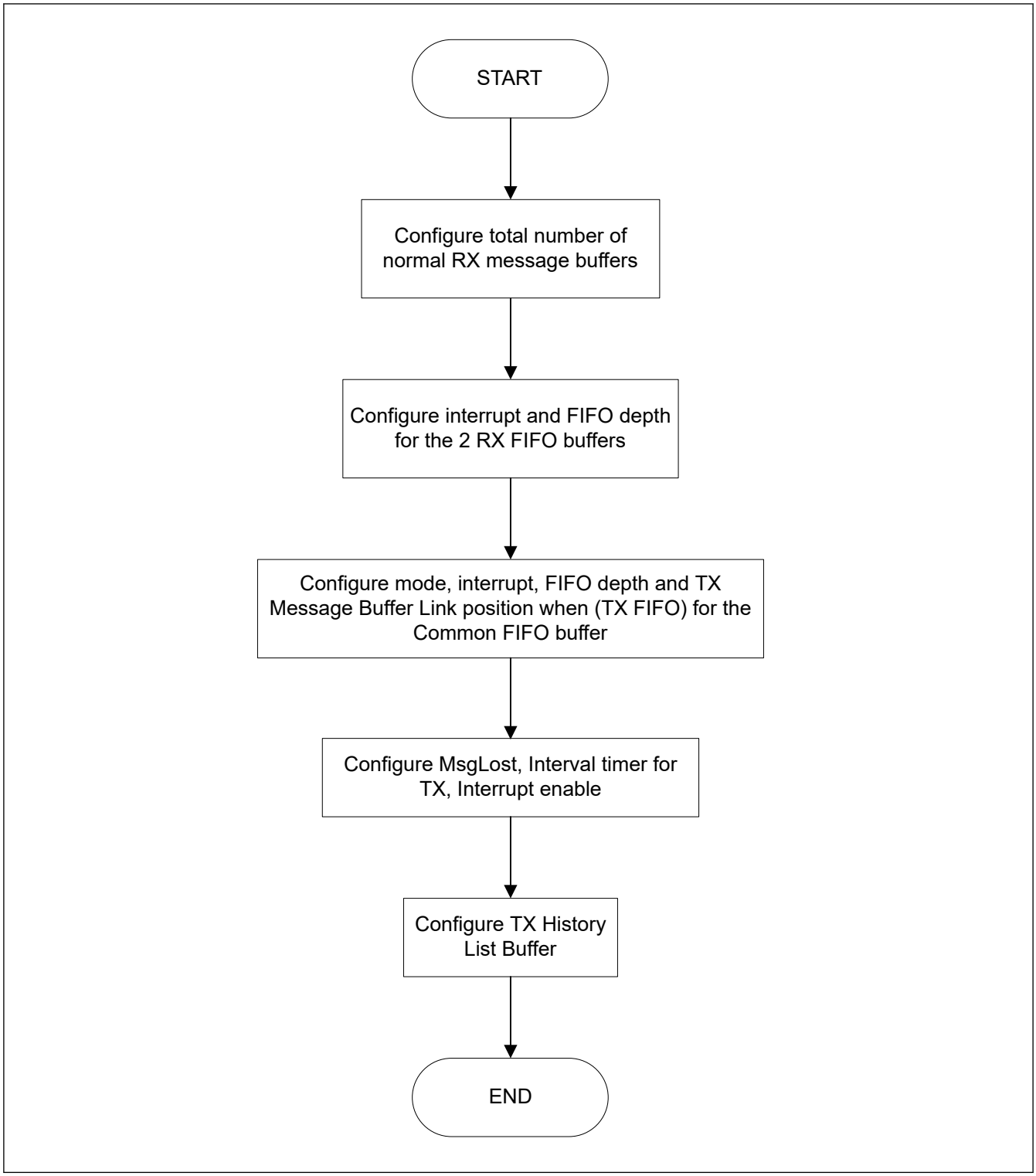

Figure 29.29 FIFO buffer configuration flow in CANFD module

As shown in Figure 29.29, the various FIFO buffers can be configured by writing to the RX FIFO Configuration/Control Registers and the Common FIFO Configuration/Control Registers.

For the 2 RX FIFO buffers, the following parameters can be configured:

- Interrupts
- FIFO depth
- FIFO payload data size.

For the common FIFO buffer, the following parameters can be configured:

- Mode
- Interrupts FIFO depth
- FIFO payload data size
- FIFO TX link position.

(1) FIFO mode configuration of Common FIFO buffer

The mode of the common FIFO buffer can be configured by writing to the CFDCFCC.CFM[1:0] bits in the Common FIFO Configuration/Control Register. The possible modes of configuration for Common FIFO buffer are:

- 0b RX mode (default mode after hardware reset)
- 1b TX mode

Messages can only be read from the RX FIFO buffers and the Common FIFO buffer configured in RX mode. Messages are stored by the CAN module in these FIFO buffers based on the AFL entries.

Messages can be read and written into the Common FIFO buffer configured in TX mode. These messages are transmitted on the appropriate CAN channel.

The pointers can only be incremented when a new message is stored in the FIFO buffer and decremented when a message is transmitted on the corresponding CAN channel by the CANFD module.

After a hardware reset, the Common FIFO buffer is configured in RX mode by default. Only enable the FIFO buffers after configuring the Common FIFO buffer in the required modes.

(2) FIFO TX message buffer link configuration

When the common FIFO is configured as TX FIFO, the FIFO buffer must be linked to a normal TX message buffer to participate in the transmission scan.

Do not write data into a TX message buffer that is linked to a Common FIFO buffer. Also, the TX message buffer linked to a Common FIFO buffer should not be a part of the TX Queue.

The TX message buffer link of each Common FIFO buffer can be configured by writing to the CFDCFCC.CFTML[1:0] bits in the Common FIFO Configuration/Control Registers. Available options for TX message buffer link configuration are:

- 0x00: TX Message Buffer 0
- 0x01: TX Message Buffer 1
- 0x10: TX Message Buffer 2
- 0x11: TX Message Buffer 3

(3) FIFO depth configuration

The depth of each FIFO buffer can be configured by writing to the CFDRFCCa.RFDC[2:0] bits and CFDCFCC.CFDC[2:0] bits in the RX FIFO Configuration/Control Registers and the Common FIFO Configuration/Control Registers. The 6 available options for depth configuration are:

- 0x000: 0 Message (FIFO buffer cannot be enabled)
- 0x001: 4 Messages
- 0x010: 8 Messages
- 0x011: 16 Messages
- 0x100: 32 Messages
- 0x101: 48 Messages

The RAM allocation for RX message buffers along with FIFO buffers is limited to 16 messages with 64 data bytes. Configuration of the RX message buffers, along with FIFO buffers, that exceeds this maximum limit should not be done.

CANFD module logic does not check the validity of the configuration.

Note: If the FIFO depth of a common FIFO is 4 messages or more (CFDCFCC.CFDC[2:0] > 000b), then the Common FIFO TX message buffer link is valid when the FIFO is disabled or enabled.

If FIFO depth is 0 messages, then the Common FIFO TX message buffer link is not valid when the FIFO is disabled or enabled.

(4) FIFO payload size configuration

The data size of each FIFO buffer can be configured by writing to the CFDRFCCa.RFPLS[2:0] bits and CFDCFCC.CFPLS[2:0] bits in the RX FIFO Configuration/Control Registers and the Common FIFO Configuration/Control Registers. The eight available options for depth configuration are:

- 000b: 8 bytes
- 001b: 12 bytes
- 010b: 16 bytes
- 011b: 20 bytes
- 100b: 24 bytes
- 101b: 32 bytes
- 110b: 48 bytes
- 111b: 64 bytes

The RAM allocation for RX message buffers along with FIFO buffers is limited to 16 messages with 64 data bytes. Configuration of the RX message buffers, along with FIFO buffers, that exceeds this maximum limit should not be done.

CANFD module logic does not check the validity of the configuration.

Note: This feature is not available in the classical CAN function.

(5) FIFO interrupt configuration

The Interrupt generation conditions for the FIFO buffers can be configured by writing to the CFDRFCCa.RFIM and CFDCFCC.CFIM bit in the RX FIFO Configuration/Control Registers and the Common FIFO Configuration/Control Registers. The two available options are:

- 0:
  - RX FIFO mode: Interrupt generated when the Common FIFO counter reaches CFDRFCCa.RFIGCV/ CFDCFCC.CFIGCV value
  - TX FIFO mode: Interrupt generated when the Common FIFO transmits the last message successfully
- 1:
  - RX FIFO mode: Interrupt generated at the end of storage of every received message
  - TX FIFO mode: Interrupt generated for every successfully transmitted message

If the Interrupt Mode bit is 0 for a RX FIFO, then interrupt is generated based on the configuration of the CFDRFCCa.RFIGCV[2:0] bits.

Similarly, if the Interrupt Mode bit is 0 for a Common FIFO configured in RX mode, then interrupt is generated based on the configuration of CFDCFCC.CFIGCV[2:0] bits.

The eight available options for configuring the FIFO counter value for generation of an interrupt are:

- 000b: Interrupt generated when FIFO is 1/8th Full
- 001b: Interrupt generated when FIFO is 1/4th Full
- 010b: Interrupt generated when FIFO is 3/8th Full
- 011b: Interrupt generated when FIFO is 1/2 Full
- 100b: Interrupt generated when FIFO is 5/8th Full
- 101b: Interrupt generated when FIFO is 3/4th Full
- 110b: Interrupt generated when FIFO is 7/8th Full
- 111b: Interrupt generated when FIFO is Full.

In this case, an interrupt is generated when the message count matches the configured value.

However, there are some limitations on the configuration of the CFDRFCCa.RFIGCV[2:0] and CFDCFCC.CFIGCV[2:0] bits depending on the FDC[2:0] bits (FIFO Depth Configuration), see Table 29.25.

Table 29.25 FIFO interrupt generation counter and FIFO depth configuration

RFDC[2:0] (CFDC[2:0])	RFIGCV[2:0] (CFIGCV[2:0])							
	111b	110b	101b	100b	011b	010b	001b	000b
000b	Don't care (FIFO cannot be enabled)							
001b	Allowed	Not allowed	Allowed	Not allowed	Allowed	Not allowed	Allowed	Not allowed
010b	Allowed							
011b	Allowed							
100b	Allowed							
101b	Allowed							
110b	Allowed							
111b	Allowed							

29.6.2.2 FIFO Buffers Control

The FIFO interrupt must be enabled by setting any one of the following bits in the RX FIFO Configuration/Control Registers:

- CFDRFCCa.RFIE

In addition, the FIFO interrupt must be enabled by setting any one of the following bits in the Common FIFO Configuration/Control Register:

- CFDCFCC.CFRXIE
- CFDCFCC.CFTXIE

After configuration is complete, each FIFO can be enabled by setting the CFDRFCCa.RFE and CFDCFCC.CFE bits in the RX FIFO Configuration/Control Registers and the Common FIFO Configuration/Control Register to allow transmission and reception of messages.

29.7 Interrupts and DMA

29.7.1 Interrupts

The CANFD module generates several interrupts. The interrupt output, which is connected to the Interrupt Controller Unit (ICU), can be controlled by the corresponding interrupt enable bit.

The status flag is set independent from this enable bit.

The channel transmission interrupt has an additional status flag register. The status bits are set when the corresponding interrupt enables are set.

The status flag register supports the identification of the interrupt source for the channel transmission, as this interrupt is driven by several trigger sources.

The interrupts in the CANFD module can be classified into two groups, global interrupts and channel interrupts:

- Global interrupts:
  The CANFD module can generate 3 global interrupts:
  - Global interrupt for successful reception into the 2 RX FIFO buffers
  - Global error interrupt.
  - Global Interrupt for successful reception into the 16 RX message buffers
- Channel interrupts:
  Channel of the CANFD module can generate 3 channel interrupts:

1. Channel transmission
   - Transmission completion from channel
   - Transmission abort from channel
   - Transmission from TX Queue for a channel
   - Channel THL interrupt
   - Successful transmission from a Common FIFO in TX mode for a channel.
2. Channel error interrupt
3. Successful reception in a Common FIFO in RX mode for a channel.

The interrupts are cleared when the corresponding flag bits are cleared or the Interrupt enable bits are cleared.

Table 29.26 gives an overview of interrupt sources for the different interrupt outputs. The interrupt outputs are active-high.

Table 29.26 Interrupt source overview

Parameter	Interrupt	Name	Interrupt source	Interrupt clearing
Global Interrupts	Successful reception into at least one RX FIFO	CAN_RXF	Interrupt flag of corresponding RX FIFO for which interrupt is enabled	Clear the interrupt flag of corresponding RX FIFO buffer for which interrupt is enabled
	Global Error	CAN_GLERR	Any of the following: ● DLC Error flag ● Message Lost Status bit ● TX History Entry Lost Status bit ● CANFD Message Payload overflow flag	Clear all of : ● DLC Error flag ● Message Lost flags in all of the FIFO Status Registers ● TX History List Entry Lost flag ● CANFD Message Payload overflow flag
	Successful reception into at least one RXMB	CANn_RXMB (n = 0)	Interrupt flag of corresponding RXMB for which interrupt is enabled	Clear the interrupt flag of corresponding RXMB buffer for which interrupt is enabled
Channel Transmission Interrupts	Channel successful transmission	CANn_TX (n = 0)	Any channel related TXMB Successful flag when interrupt is enabled[*1]	Clear all channel related TXMB Result status bits for which the interrupt is enabled
	Channel Abort		Any channel related TXMB Abort flag when interrupt is enabled[*1]	Clear all channel related TXMB Result Status bits for which the interrupt is enabled globally
	Channel transmission from TX Queue		Related channel TX Queue Interrupt flag	Clear related channel TX Queue Interrupt flag
	Channel THL Interrupt		Channel THL Interrupt status flag	Clear the relevant THL Interrupt status flag
	Channel COM FIFO TX Interrupt		Interrupt Flag for Common FIFOs in TX mode belonging to the related channel	Clear the interrupt flags of Common FIFOs in TX mode belonging to the related channel
Channel Error Interrupt	Channel Error	CANn_CHERR (n = 0)	Any channel related error flag in the Channel Error Flag Register for which interrupt is enabled in the Channel Error Interrupt Enable Register	Clear all channel related error flags in the Channel Error Flag Register for which interrupt is enabled in the Channel Error Interrupt Enable Register
Channel COM RX FIFO Interrupt	Channel COM FIFO RX Interrupt	CANn_COMFRX (n = 0)	Interrupt flag for Common FIFOs in RX mode belonging to the related channel	Clear the interrupt flags of Common FIFOs in RX mode belonging to the related channel

Note 1. These interrupts are only set for TX Message Buffers that do not belong to an enabled TX Queue and are not pointing to a common FIFO.
Separate interrupts are provided for common FIFO buffers and TX Queue.

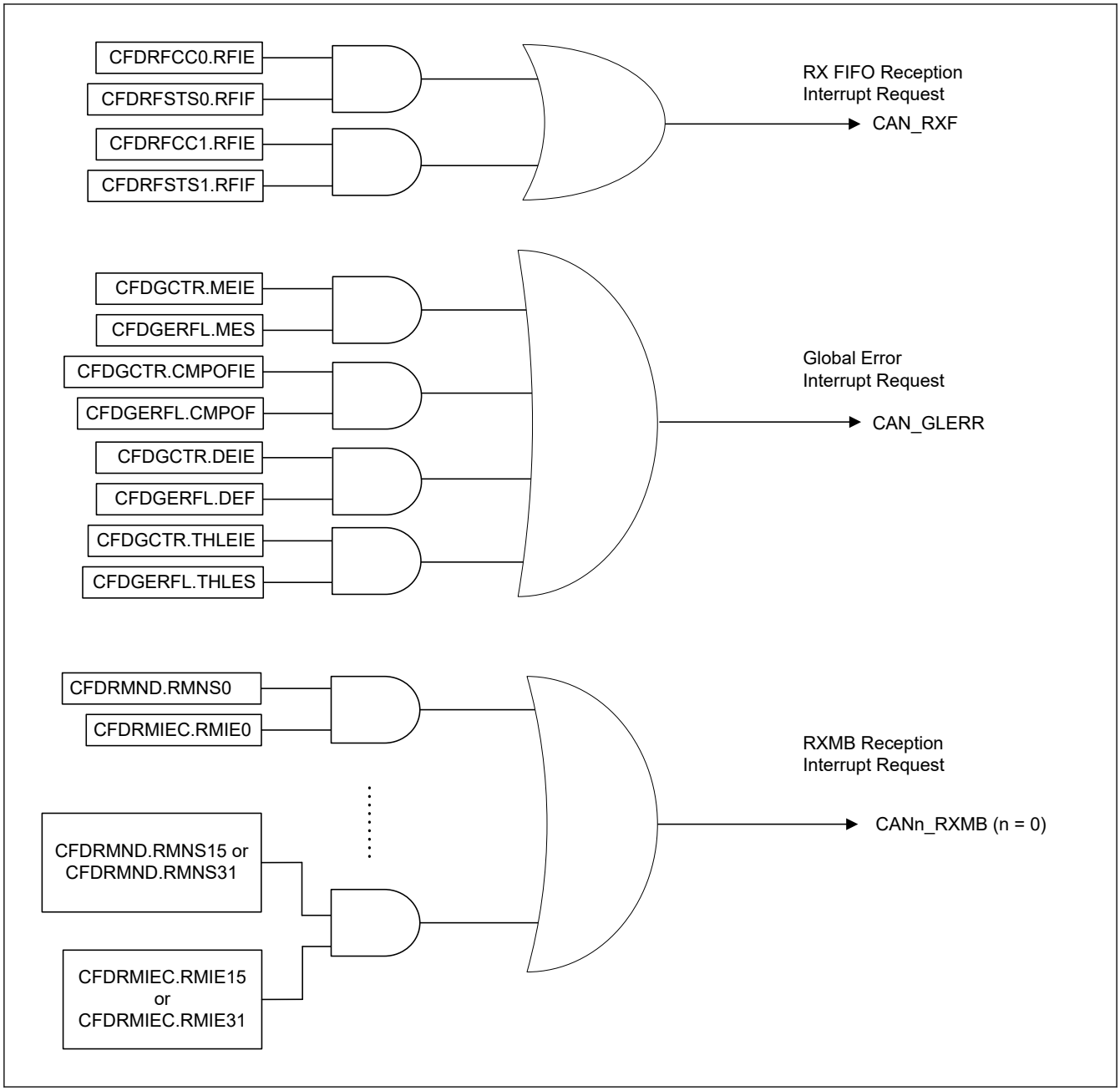

Figure 29.30 Global interrupt block diagram

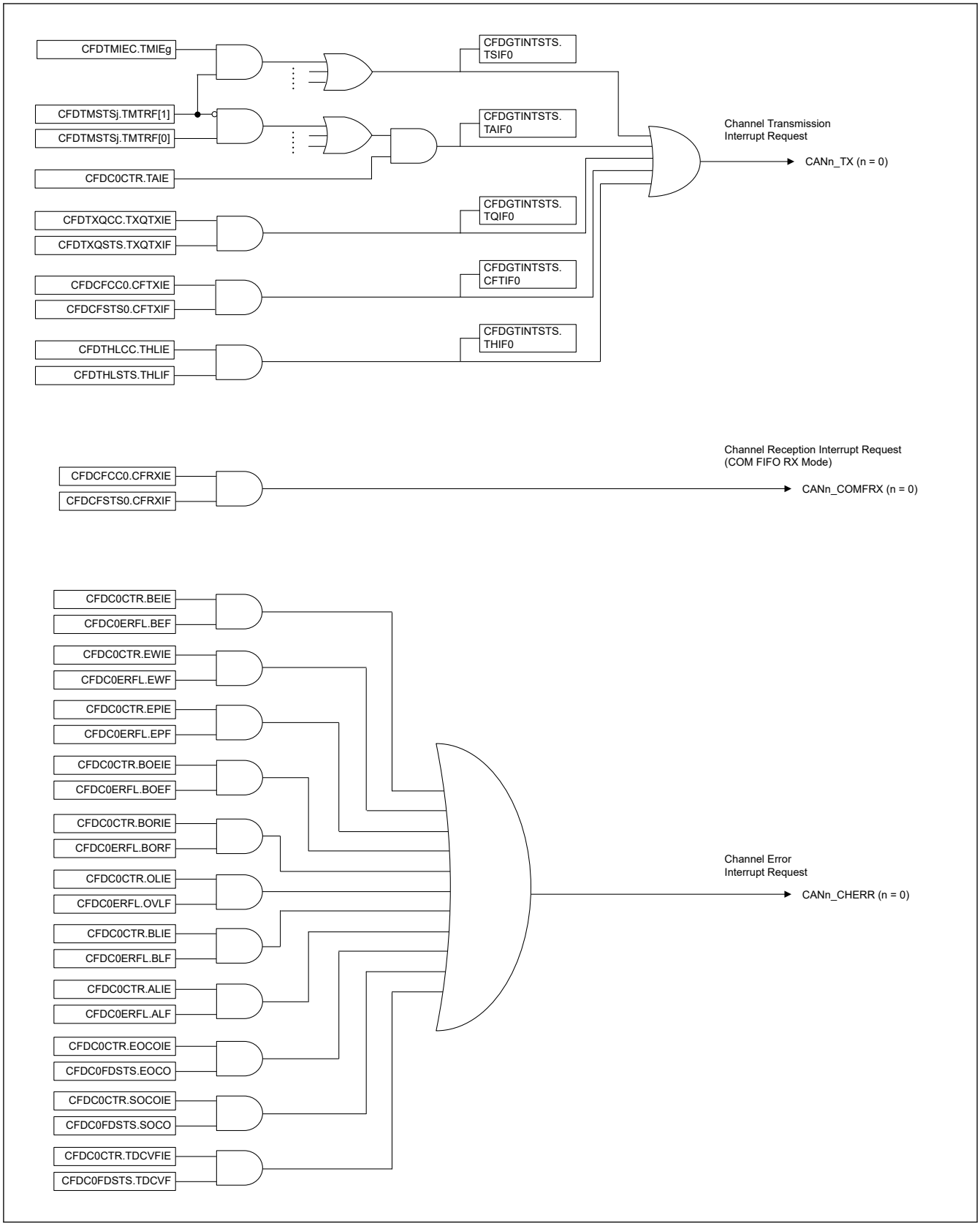

Figure 29.31 Channel interrupt block diagram

29.7.2 DMA Transfer

The CANFD module has message buffers that can be associated with a DMA channel:

- Reception DMA
  - 2 RX FIFO message buffers
  - Common FIFO Message Buffer

Figure 29.32 shows the potential DMA channels.

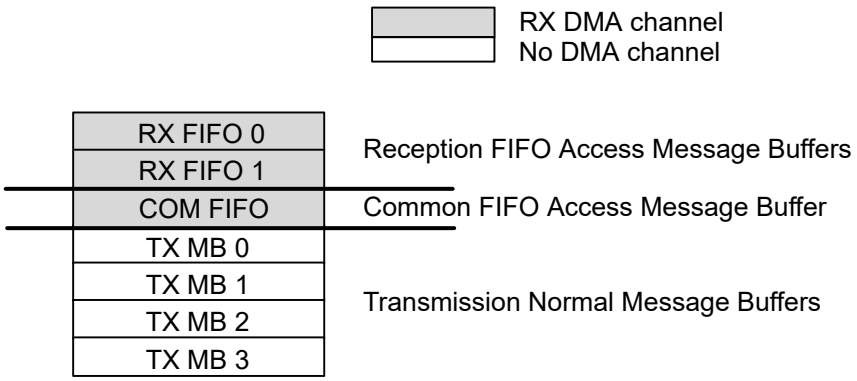

Figure 29.32 Message buffer connectable to a DMA channel

A DMA channel transfer request is generated for each FIFO entry to the DMAC when the related CFDCDTCT.RFDMAE or CFDCDTCT.CFDMAE is set to 1 and the belonging FIFO is not empty.

Reception FIFO Interrupt should be disabled for this particular FIFO (CFDRFCCa.RFIE or CFDCFCC.CFRXIE)

Use the regular start address for the DMA access window address. See Figure 29.33.

Table 29.27 DMA channel access window address

b = Message buffer component index	Message Buffer Component	Register	P	Regular Start Address
b = [0…1]	RFMBCPb[0]	CFDRFIDb	x	0x0520 + b × 0x004C
		CFDRFPTRb	x	0x0524 + b × 0x004C
		CFDRFFDSTSb	x	0x0528 + b × 0x004C
		CFDRFDFbp	[0…15]	0x052C + p × 0x0004 + b × 0x004C
—	CFMBCP0[0]	CFDCFID	x	0x05B8
		CFDCFPTR	x	0x05BC
		CFDCFFDCSTS	x	0x05C0
		CFDCFDFp	[0…15]	0x05C4 + p × 0x0004

DMA FIFO pointer decrement is done automatically by reading the last configured data payload byte (CFDRFCCa.RFPLS or CFDCFCC.CFPLS).

Note: The DMA must read the exact length of the configured data payload size (CFDRFCCa.RFPLS or CFDCFCC.CFPLS).

Note: This feature is not available for classical CAN function because CFDRFCCa.RFPLS and CFDCFCC.CFPLS are not in classical CAN.

Do not write to the FIFO control registers when DMA is enabled. The DMA enable of the particular DMA FIFO (CFDCDTCT.RFDMAE or CFDCDTCT.CFDMAE) can be set at any time. Figure 29.33 shows a configuration flow for an initial setup.

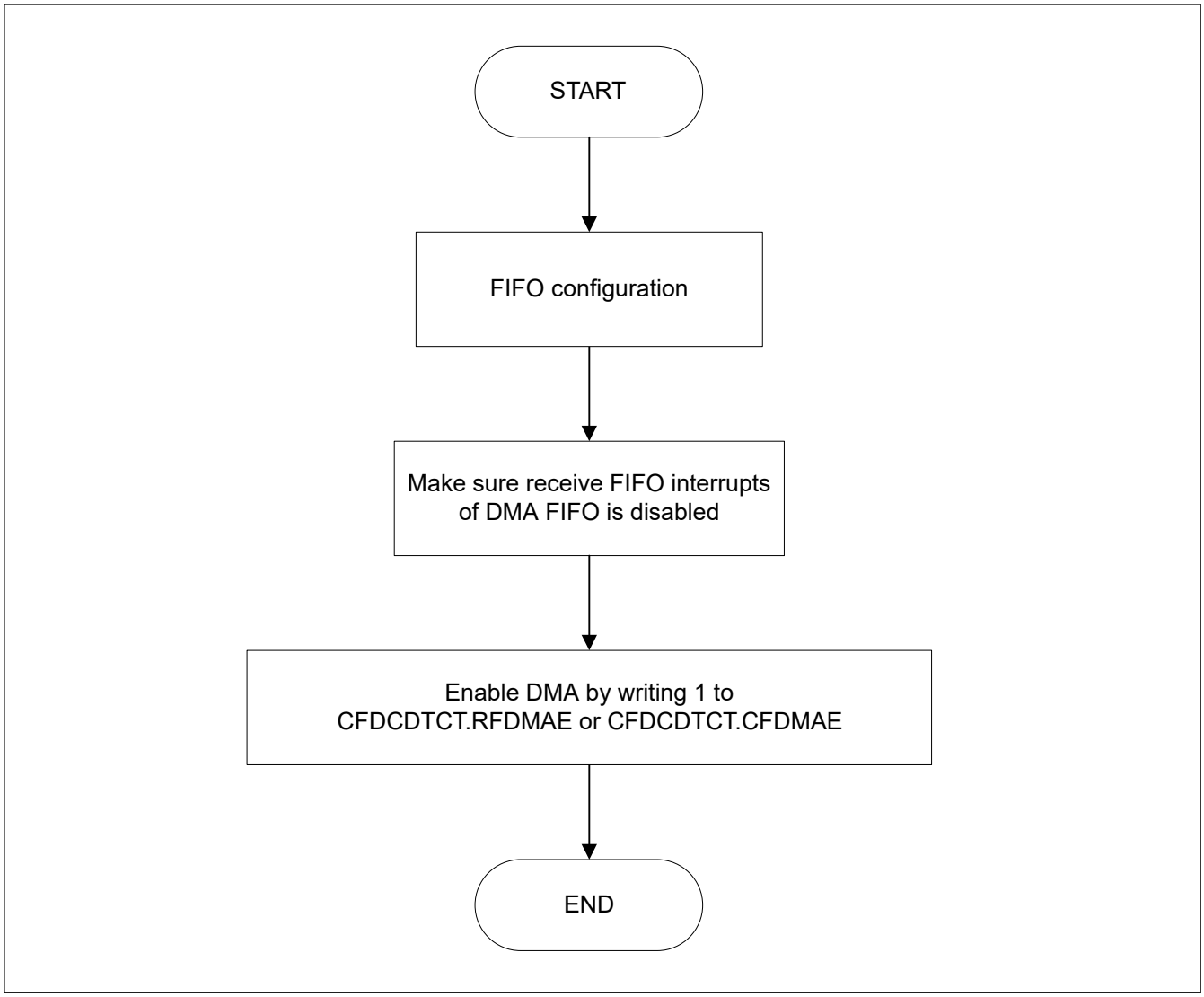

Figure 29.33 DMA enable flow

To disable a DMA transfer request, you must disable the particular DMA enable bit (CFDCDTCT.RFDMAE or CFDCDTCT.CFDMAE). If the disable is made during an ongoing transfer, then the transfer must be completed first before further action can be taken. The transfer status can be identified by the CFDCDTSTS.RFDMASTS or CFDCDTSTS.CFDMASTS bit. See Figure 29.34 for the DMA disable flow. When the DMA is disabled, consideration should be made for the remaining or new incoming messages to this particular reception FIFO.

When the FIFO is not disabled, reception to the FIFO continues.

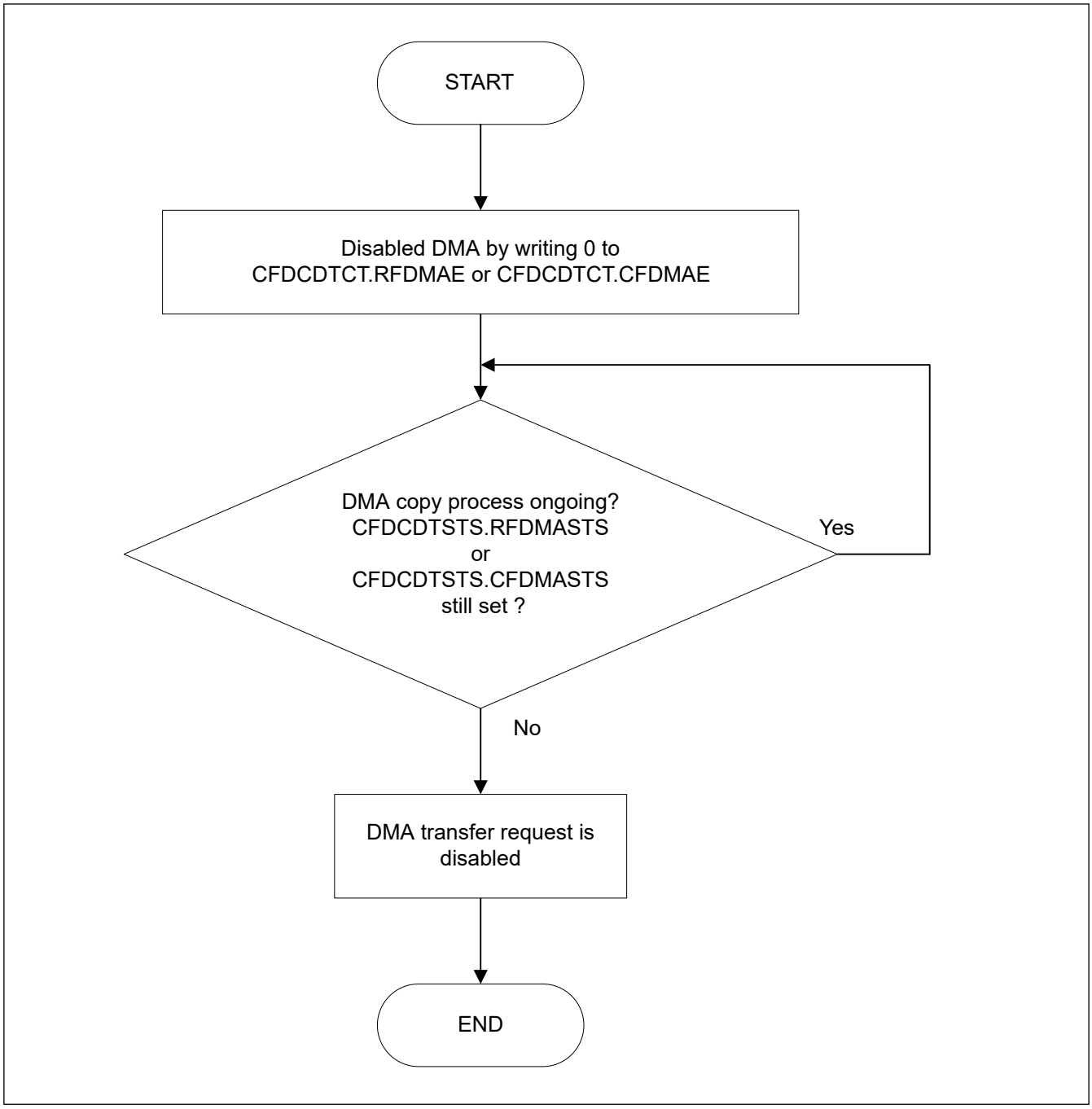

Figure 29.34 DMA disable flow

29.8 Reception and Transmission

29.8.1 Reception

In the CANFD module, CAN messages received on any of the channels are stored in RX message buffers, RX FIFO buffers, or Common FIFO buffers configured in RX mode depending on the Acceptance Filter List entries.

- Up to 16 RX message buffers can be configured
- 2 RX FIFO buffers available
- 1 Common FIFO Buffer can be configured in RX mode

29.8.1.1 Message Storage in RX Message Buffers

When a message is successfully received and stored in a RX message buffer, the corresponding New Data flag is set in the RX Message Buffer New Data Register.

The CAN message can be read from the corresponding RX message buffer.

If a new message is stored into a RX message buffer before the previous message in this message buffer can be read, then the original message is overwritten. There is no mechanism for preventing a new message from overwriting the current message in the RX message buffer. If such a loss of messages is not acceptable, then RX FIFO should be used for storing related messages.

Note: Users should do the same processing as the existing software flow also when using interrupt. (see Figure 29.36)

Note: Unused data bytes are filled with 0x00 depending on the DLC value.

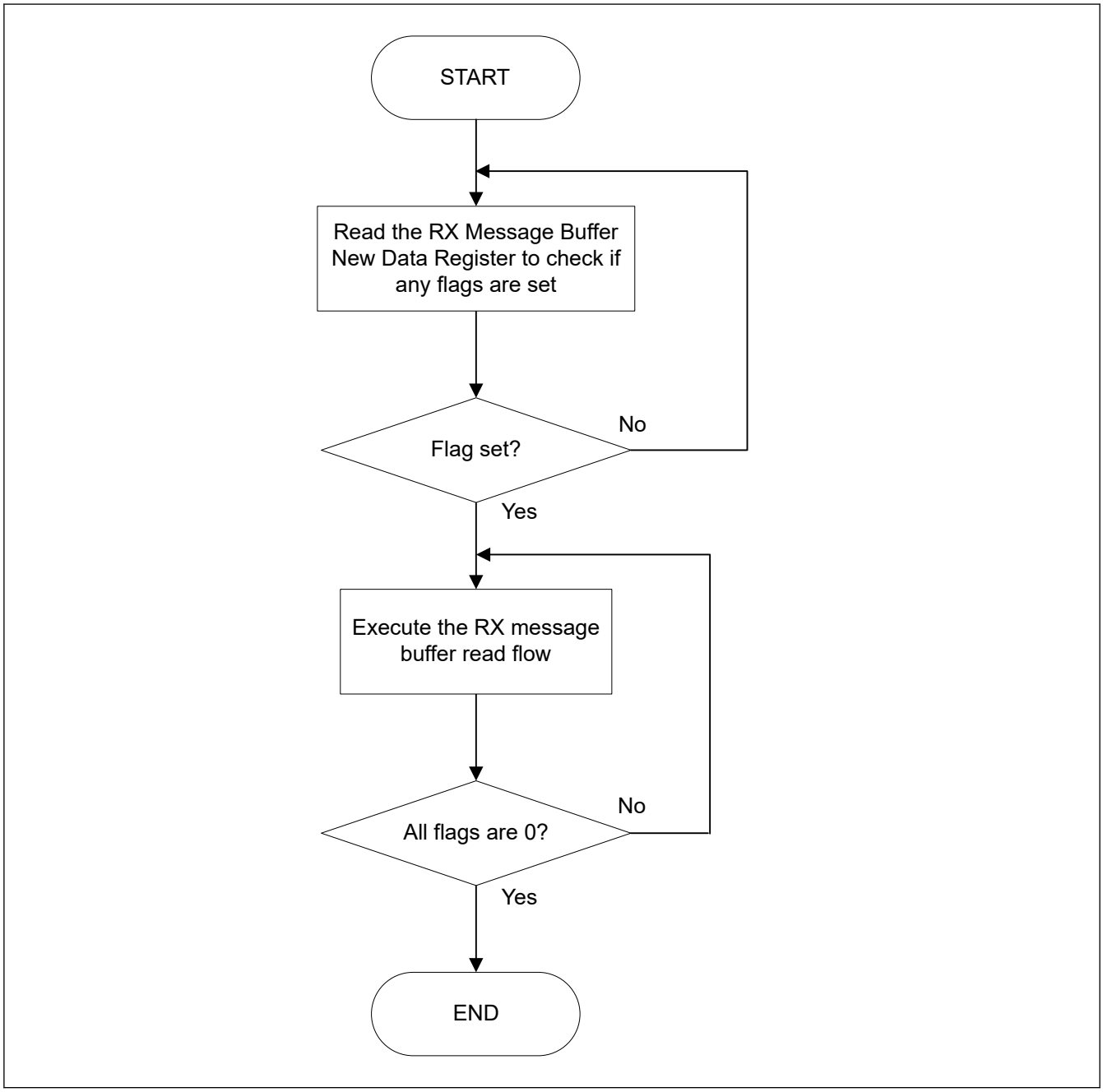

Figure 29.35 Access flow of RX message buffer (Polling)

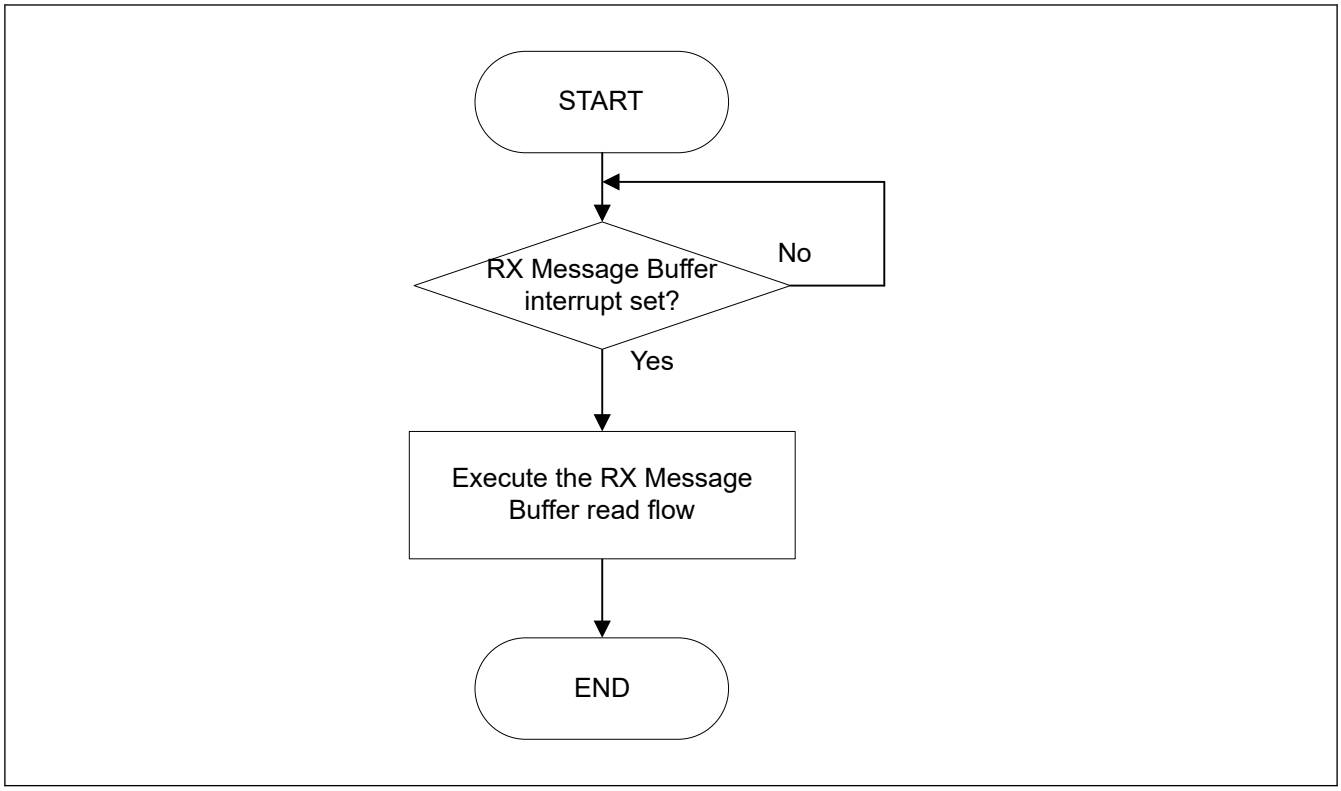

Figure 29.36 RX Message Buffer Message Access Flow (interrupt)

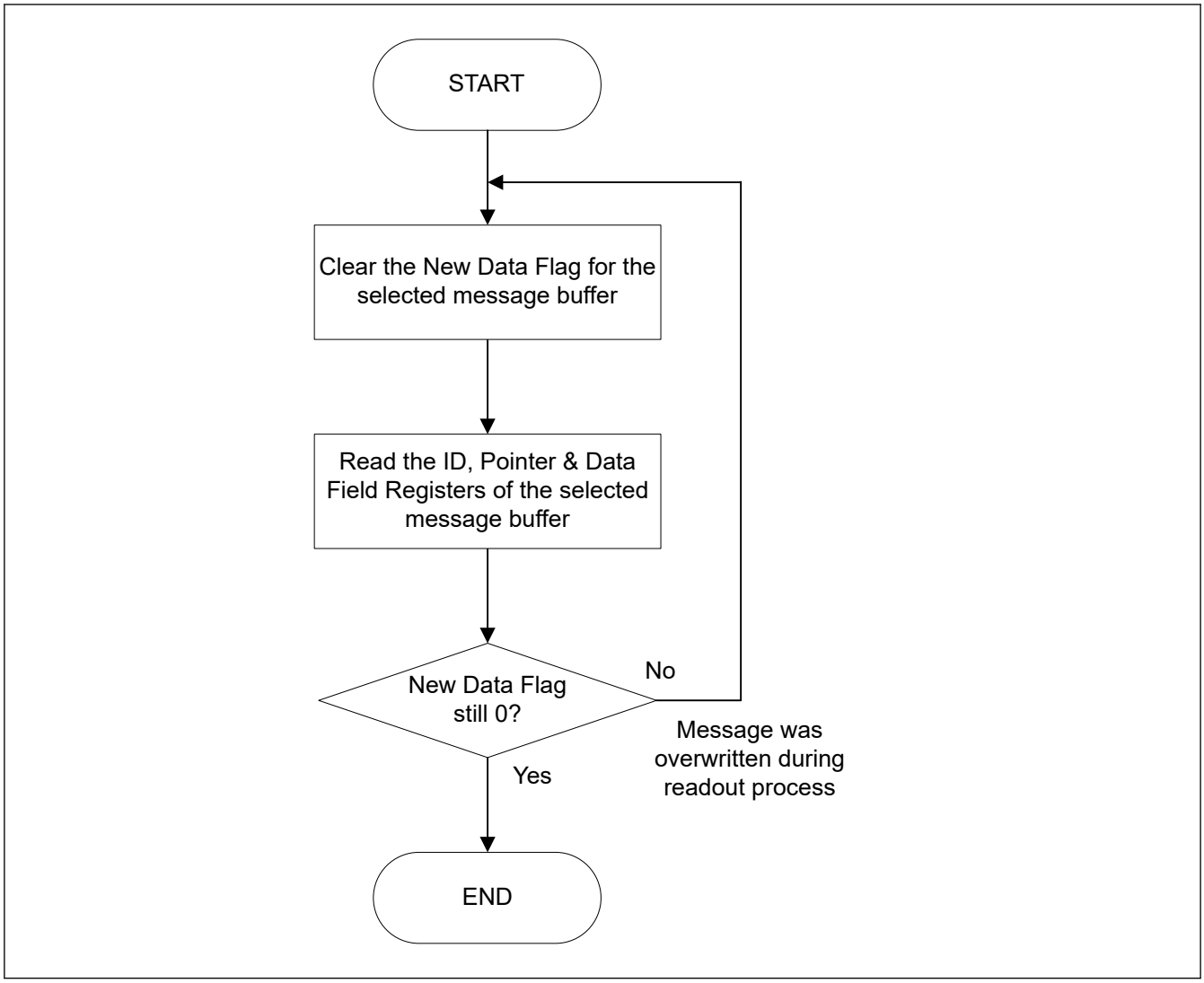

Figure 29.37 Read flow of RX message buffer

29.8.1.2 Message Storage in FIFO Buffers

The AFL entries for routing the received messages to RX FIFO buffers or Common FIFO buffer configured in RX mode should be configured based on system requirements.

The CFDGAFLP1r.GAFLFDP[8,1:0] field in the matching AFL entry selects the FIFO buffers to which the related reception message is stored.

When the received message is stored in one or more RX FIFO buffers or Common FIFO buffer configured in RX mode, the message counter value is incremented in the corresponding RX FIFO Status Registers or Common FIFO Status Register.

Depending on the configuration of the FIFO buffers, an interrupt might also be generated.

The message can be read from the corresponding FIFO Access registers.

Note: Because many messages can be stored in the FIFO buffers, reading more than one message may be required to read the latest message stored in a FIFO buffer.

If the message count value matches the FIFO depth, the FIFO Full flag is set.

When the value 0xFF is written to the corresponding FIFO Pointer Control Register, the message count is decremented by 1.

Only write 0xFF to the FIFO Pointer Control register after reading the complete message from the FIFO Access registers of the corresponding FIFO.

When all the messages stored in the FIFO are read, the FIFO Empty flag is set.

If a new message is stored into the FIFO when the FIFO message count matches the FIFO depth (FIFO full condition), the FIFO Message Lost flag is set and the new message is lost (no overwrite of already stored messages takes place).

An appropriate value can be configured as warning level to generate an interrupt before the FIFO full condition occurs to avoid loss of a message due to an overrun condition.

Note: The message lost can be set only in RX mode by CAN, and the flag is not set when the CPU is overloading the FIFO buffers.

The RX FIFO buffers and the Common FIFO buffers configured in RX mode can be disabled at any time by clearing the CFDRFCCa.RFE or CFDCFCC.CFE bit in the RX FIFO Configuration/Control Registers and the Common FIFO Configuration/Control Registers.

When the CFDRFCCa.RFE or CFDCFCC.CFE bit is cleared, the message read and write pointers of the FIFO are cleared and are no longer active. Therefore, all messages in the FIFO buffers are lost and no further messages can be stored into the FIFO.

When the RX FIFO buffers or Common FIFO buffer configured in RX mode is assigned as a DMA channel, software should not access the FIFO Access Register of this FIFO buffer or write 0xFF to the FIFO Pointer Control Register (CFDCFPCTR.CFPC or CFDRFPCTRa.RFPC). This can lead to unintended FIFO message decrement. The DMA channel controls the FIFO decrement automatically.

Note: If the interrupt flag is set for a FIFO buffer and then the FIFO is disabled, the interrupt flag is not cleared automatically. The interrupt flag should be cleared before disabling the FIFO.

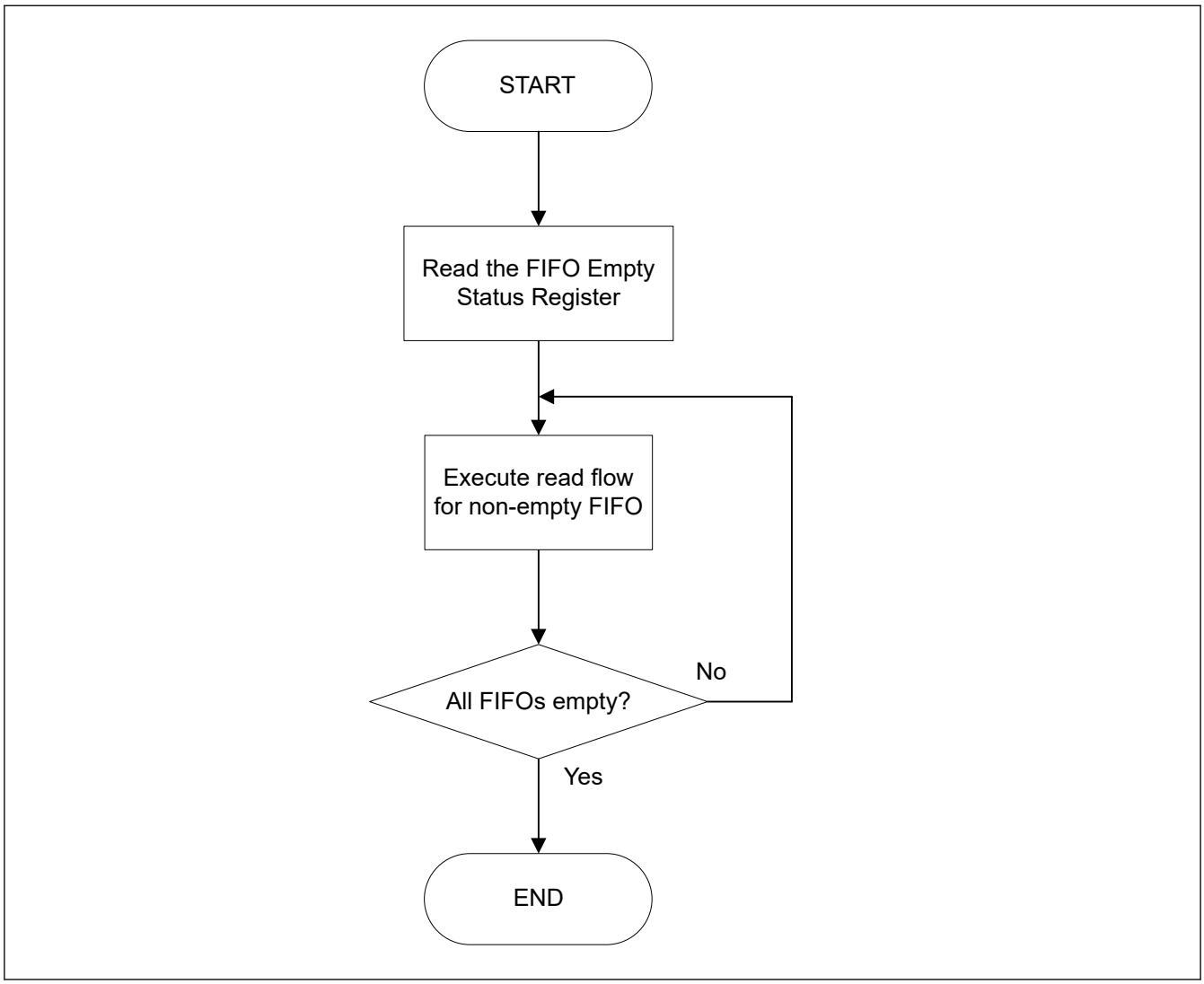

Figure 29.38 Access flow of FIFO buffer message (example for polling case)

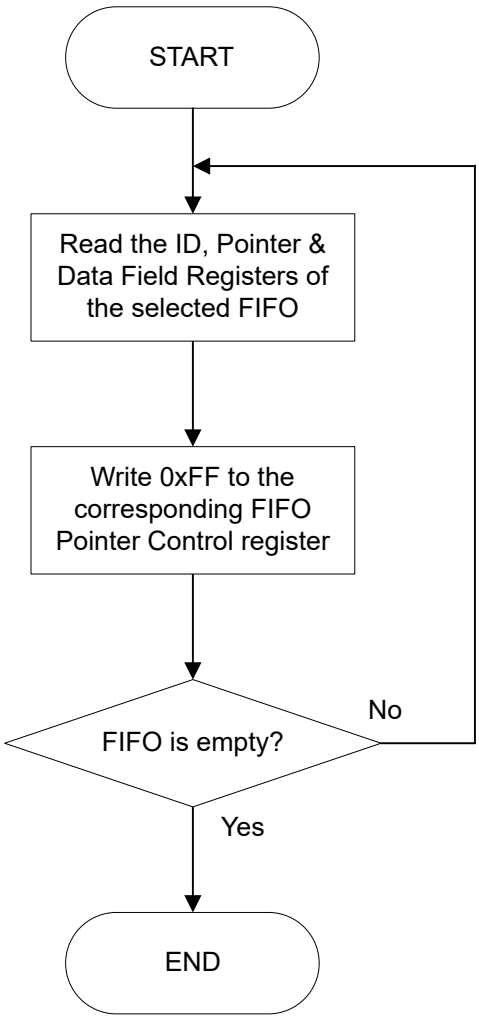

Figure 29.39 Read flow of RX FIFO buffer message (example for polling case)

Note: When the next frame is received before clearing the completion interrupt flag of reception, the completion interrupt of reception is not set again.

Even when an interruption flag is cleared after the completion processing of reception, the already received interrupt flag is not set.

It is necessary to perform the completion processing of reception even before the next completion of frame reception, and to clear an interruption flag.

When processing does not meet the condition, after checking that receiving data is empty, interrupt flag is cleared and it checks that receiving data is empty again.

29.8.1.3 Timestamp

The timestamp counter is a free-running counter that can be used to check reception time of an incoming message or transmission time of successful transmitted messages. The Timestamp counter value is captured based on the CFDGFDCFG.TSCCFG[1:0] configuration (at the sample point of start of frame, point in time when the frame is valid, or for CANFD frames also at the sample point of the RES bit). For reception, it is stored together with the message ID and data into the target RX message buffer or RX FIFO.

For transmit message, the timestamp counter value is stored as part of the TX History List entry.

The counter can be clocked with the peripheral clock or with the CAN channel bit timing clock. The counter source clock can be configured with the CFDGCFG.TSSS bit of the Global Configuration Register. If this bit is 0, the peripheral clock is used. If the bit is 1, the selected CAN channel bit time clock is used.

The channel selection is performed with the CFDGCFG.TSBTCS bit of the Global Configuration Register.

Care must be taken when using selected CAN channel bit time clock as the clock source. When entering Channel Halt mode or Channel Reset node, for this channel, the timestamp counter is stopped. For other CAN channels, the timestamp counter value is not updated.

If peripheral clock is selected as the timestamp counter clock source, Channel modes do not affect the timestamp counter function.

The source clock for the timestamp counter can be divided by a factor defined by the CFDGCFG.TSP bits (timestamp prescaler) in the Global Configuration Register.

The timestamp counter can be reset to 0x0000 with the CFDGCTR.TSRST bit (timestamp reset).

29.8.2 Transmission

There are several possible transmission configurations:

- Normal transmission
- FIFO transmission
- TX Queue transmission
  A fixed number of transmission message buffers (4 TX message buffers) are dedicated. These message buffers are only used for transmission and cannot be configured for reception.
  Additionally transmission from TX Queue or Common FIFO in TX mode can be configured in the following way (see Figure 29.40):
  - TX Queue: Up to four transmission message buffers can be grouped to form a TX Queue with a common access window.
    Upper transmission message buffers are used to form the TXQ.
    TXQ has an access window.
    - TXQ is transmission Message Buffer 0.
- Common FIFO (TX mode): Common FIFO in TX mode is linked to a dedicated channel.
  Channel has a fixed number of one Common FIFO assigned to it. Within the channel, a Common FIFO configured in TX mode, can be freely linked (assigned) between 0 and 3 transmission message buffers (only one FIFO to one transmission message buffer).
  The Common FIFO buffer then replaces the transmission message buffer linked to it.
  Transmission Control and Status registers of these transmission message buffers should not be used.

See Figure 29.28 for information about Common FIFO buffer assignment to related channel.

Note: Common FIFO buffer should not be linked to TX message buffers that are already part of a TX Queue.

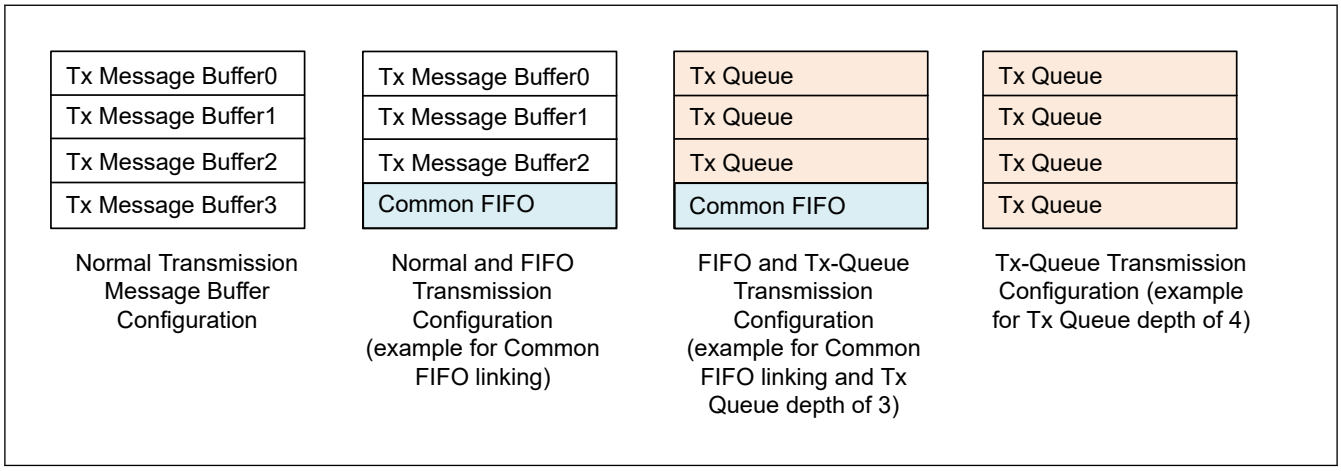

Figure 29.40 Configuration of channel transmission message buffer

29.8.2.1 Transmission Priority

If two or more transmission message buffers of a channel are configured for transmission, then the transmission priority in the CANFD module can be selected from the following two modes:

- CAN ID priority
- Message buffer number priority.

The transmission priority mode is common for all message buffers. It can be configured with the CFDGCFG.TPRI bit in the Global Configuration Register.

For message buffer number priority transmission, the smallest message buffer number with transmission request has the highest priority for transmission. This also includes the TX message buffers linked to the Common FIFO buffer configured in TX mode.

However, message buffer number priority should not be used if TX Queue is enabled.

For CAN ID priority transmission, ID priority complies with the CAN bus arbitration rule (as specified in ISO 11898-1 specification). All TX message buffers can enter the ID priority comparison for message buffers configured for transmission. This also includes the TX message buffers linked to the Common FIFO buffer configured in TX mode and includes the TX Queue message buffers.

If the ID of two or more message buffers is the same, then the smaller message buffer number has higher priority for transmission.

Note: For Common FIFO buffer configured in TX mode, only the message currently being pointed to by the FIFO read pointer can be included in the transmission arbitration.

If the message is being transmitted from the FIFO, then the next pending message within the same FIFO is considered in the transmission arbitration.

In contrast to this, all transmission message buffers of a TX Queue participate in internal transmission arbitration.

Figure 29.41 shows the transmission configuration flow.

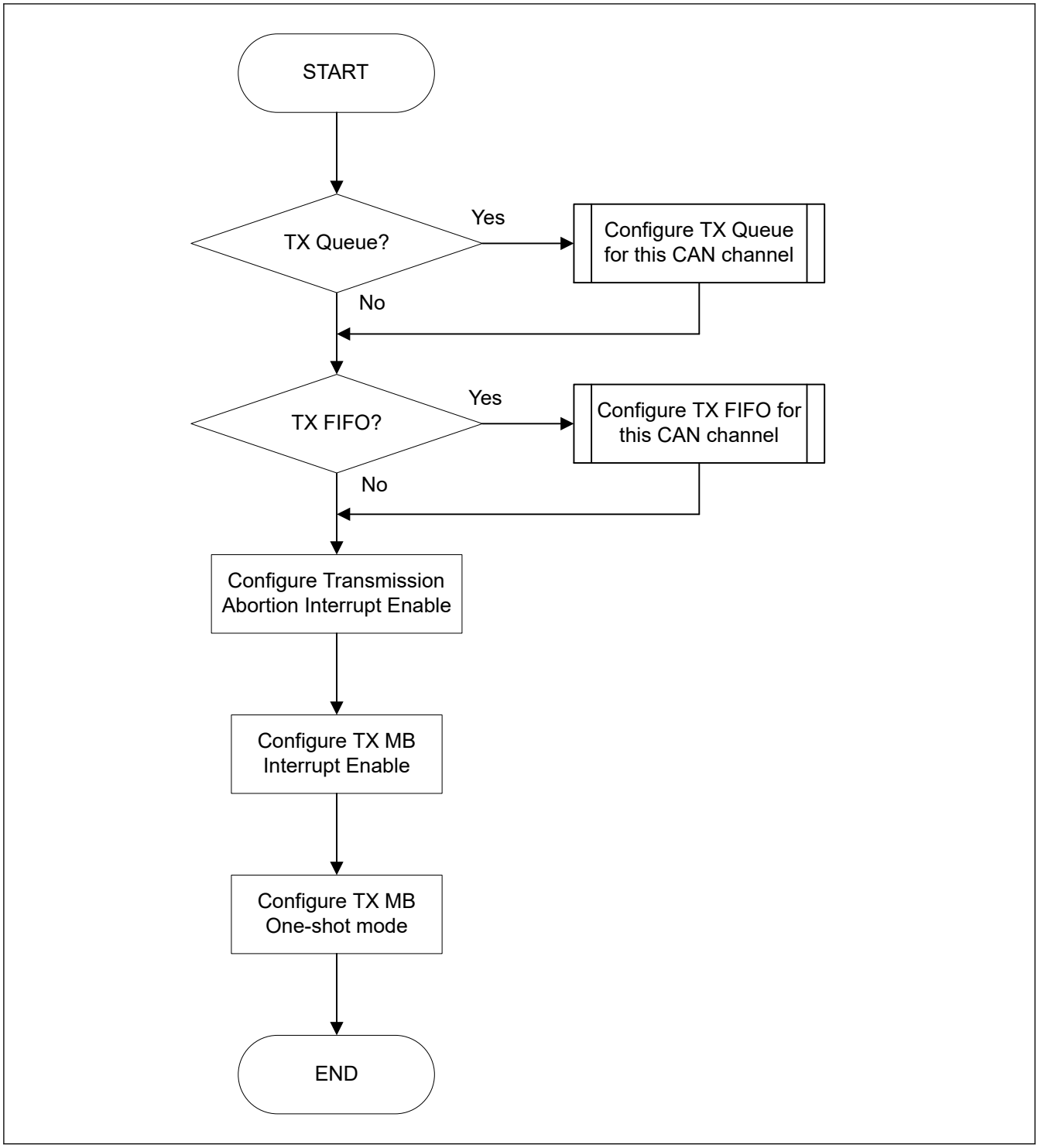

Figure 29.41 Flow for transmission configuration

29.8.2.2 Normal Transmission

Each transmission message buffer has two modes of message transmission:

1. Regular transmission mode
   If the message buffer is placed in regular transmission mode, the data frame or remote frame set in that message buffer can be transmitted.
   Completion of regular transmission can be checked through the related TX Message Buffer Transmission Result flag bits (CFDTMSTSj.TMTRF) in the TX Message Buffer Status Registers. These bits are set to 10b or 11b when the regular transmission is successful.

When arbitration is lost or an error occurs, message transmission is further attempted if no transmission abort request is set for this transmission message buffer.
New internal transmission arbitration for this channel is performed for all message buffers with transmission request.

2. One-shot transmission mode

When the CFDTMCi.TMOM bit of the TX Message Buffer Control Registers is set for a transmission message buffer, the message buffer is placed in One-shot transmission mode and attempts to transmit a message only once.

Completion of One shot transmission can be checked through the related TX Message Buffer Transmission Result Flag bits (CFDTMSTSj.TMTRF) in the TX Message Buffer Status Registers. The CFDTMSTSj.TMTRF bits are set to 10b or 11b when One-shot transmission is successful.

The CFDTMSTSj.TMTRF bits are set to 01b when arbitration is lost or an error occurs during transmission of the related message buffer.

Additional message transmission is not attempted in this case.

The regular transmission request procedure after a configuration is shown in Figure 29.42.

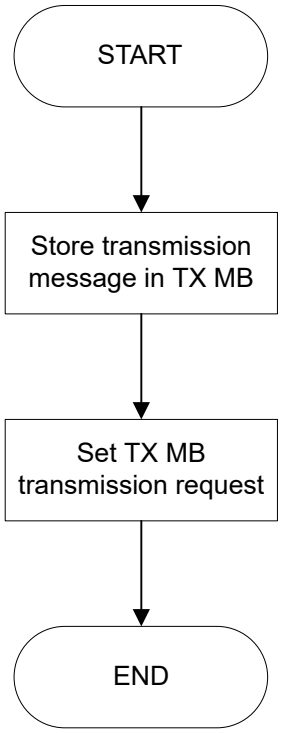

Figure 29.42 Transmission request procedure using normal TX Message Buffer mode

(1) Setting for TX Message Buffer Control Register

Table 29.28 shows configuration of a normal CAN transmission mode.

Table 29.28 Configuration of CAN transmission mode (1 of 2)

Transmission request CFDTMCi.TMTR	Transmission abort request CFDTMCi.TMTAR	One-shot enable CFDTMCi.TMOM	Communication activity
0	0	0	Message buffer disabled
0	0	1	Message buffer disabled

Table 29.28 Configuration of CAN transmission mode (2 of 2)

Transmission request CFDTMCi.TMTR	Transmission abort request CFDTMCi.TMTAR	One-shot enable CFDTMCi.TMOM	Communication activity
1	0	0	Configured as a transmission message buffer for a data frame or a remote frame
1	0	1	Configured as a one-shot transmission message buffer for a data frame or a remote frame
1	1	0	Transmission abort requested
1	1	1	One-shot transmission abort requested

The configuration bits can be configured in the TX Message Buffer Control Registers.

Figure 29.43 shows timings for successful transmission for two message buffers.

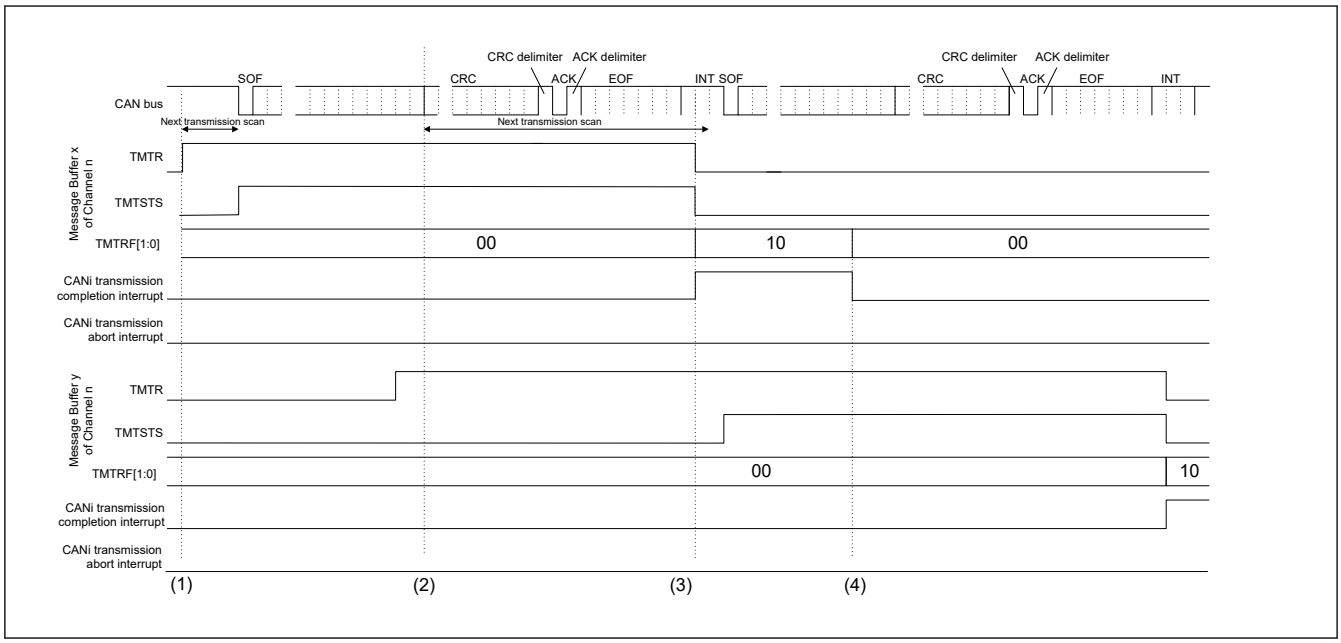

Figure 29.43 Timing of request and flag bits for successful transmission

1. If the CFDTMCi.TMTR bit in the TX Message Buffer Control Registers is set in the bus idle state, the message buffer scanning procedure determines the highest priority message buffer for transmission.
   When the transmission message buffer is determined, the CFDTMSTSj.TMTSTS bit in the related TX Message Buffer Status Registers is set (transmitting/transmitter), and CAN channel starts the transmission [*1].
2. At the first bit of CRC, the transmission scanning procedure starts for the next possible transmission when pending transmission requests exist.
3. If the message has been successfully transmitted, the CFDTMSTSj.TMTRF[1:0] bits in the corresponding TX Message Buffer Status Registers are set to 10b and CFDTMSTSj.TMTSTS and the CFDTMCi.TMTR bits are cleared.
   When the TMIE bit in the TX Message Buffer Interrupt Enable Configuration Registers is set (interrupt enabled), the CAN successful transmission interrupt request is generated.
   To clear the related interrupt line, clear the CFDTMSTSj.TMTRF flag bits.
4. Before starting the next transmission, clear the CFDTMSTSj.TMTRF bits. Load the next message in the transmission message buffer and set the CFDTMCi.TMTR bit again.
   CFDTMCi.TMTR bit cannot be set again before CFDTMSTSj.TMTRF[1:0] bits are cleared.

Note 1. If arbitration is lost after the CAN channel starts the transmission, the CFDTMSTSj.TMTSTS bit is cleared.

The transmission scanning procedure is performed again to search for the highest priority transmission message buffer from the beginning of the first CRC bit.

If an error occurs either during transmission or following the loss of arbitration, then during the error frame, the transmission scanning procedure is performed again to search for the highest priority transmission message buffer.

Note: The setting point of CFDTMSTSj.TMTSTS is not always fixed at the start of the SOF. It may be delayed up to the start of the standard ID due to the synchronization logic implemented for the PLL bypass.

Figure 29.44 shows timings for transmission abort for two message buffers.

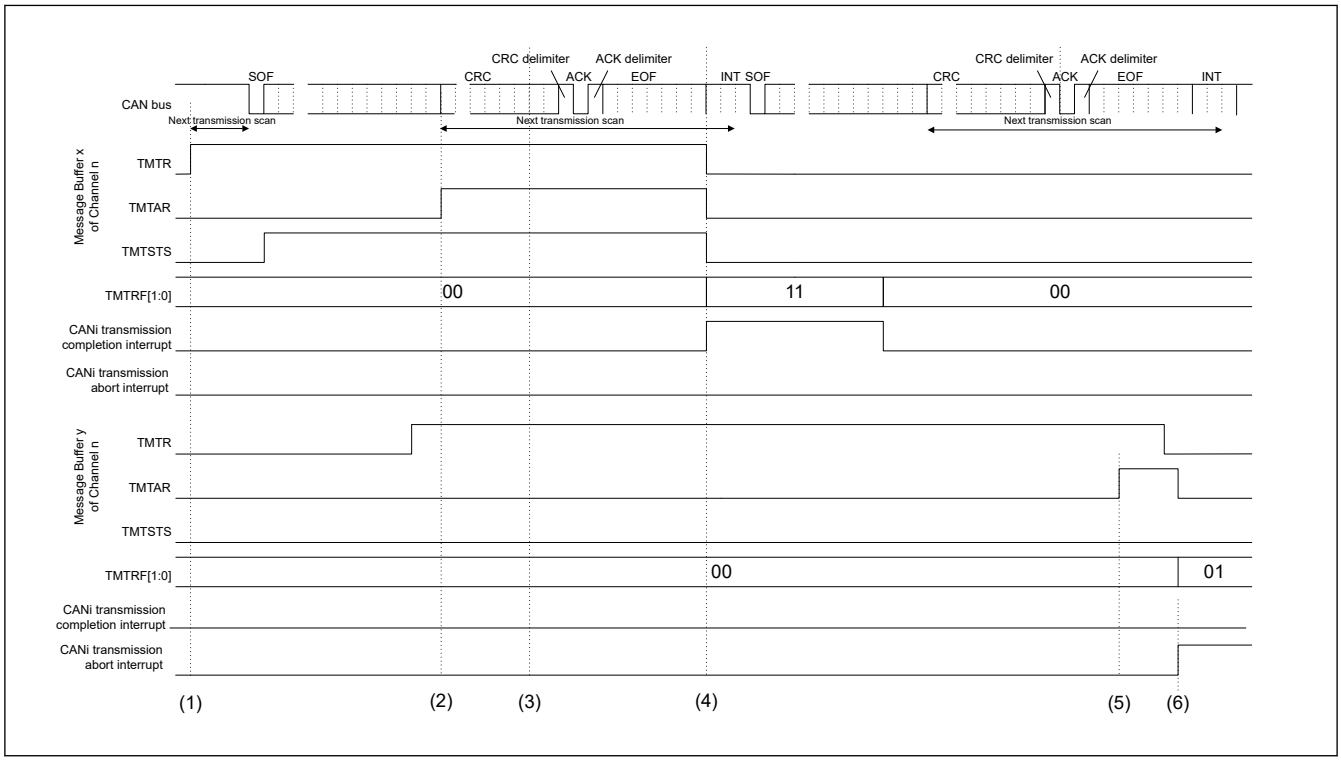

Figure 29.44 Timing of request and flag bits for transmission abort

1. If the CFDTMCi.TMTR bit in the TX Message Buffer Control Registers is set in the bus idle state, the message buffer scanning procedure determines the highest priority message buffer for transmission.
   When the transmission message buffer is determined, the CFDTMSTSj.TMTSTS bit in the TX Message Buffer Status Registers is set (transmitting/transmitter), and CAN channel starts the transmission[*1].
2. If the CFDTMCi.TMTAR bit is set when the related message buffer is already selected for transmission or currently transmitting, the message is not aborted, if no error occurs or arbitration is lost.
3. At the first CRC bit, the transmission scanning procedure starts for the next transmission. In this example, timing chart message buffer y is not selected as the next transmission message buffer.
4. If the message has been successfully transmitted, the CFDTMSTSj.TMTRF[1:0] bits in the corresponding TX Message Buffer Status Registers are set to 11b and the CFDTMSTSj.TMTSTS and CFDTMCi.TMTR bits are cleared.
   When the TMIE bit in the TX Message Buffer Interrupt Enable Configuration Registers is set (interrupt enabled), the CAN successful transmission interrupt request is generated.
   To clear the related interrupt line, clear the CFDTMSTSj.TMTRF[1:0] bits.
5. Another CAN node is transmitting on the CAN bus (CFDTMSTSj.TMTSTS is not set). If the CFDTMCi.TMTAR bit is set when the related channel is under transmission scan, the transmission request cannot be cleared.
6. After internal processing time, the transmission is aborted and the CFDTMSTSj.TMTRF[1:0] bits are set to 01b.
   If the message buffer is not transmitting or selected as the next transmission message buffer or under transmit scan, then the abort is immediately accepted and the corresponding CFDTMSTSj.TMTRF[1:0] bits in the TX Message Buffer Status Registers are set to 01b.
   In addition, CFDTMCi.TMTR, and CFDTMCi.TMTAR bits are cleared automatically.
   When the transmission abort interrupt enable TAIE bit of the related Channel Control Register is set then an interrupt is generated for successful transmission abort.
   To clear the related interrupt line the CFDTMSTSj.TMTRF[1:0] bits have to be cleared.

Note 1. If arbitration is lost after the CAN channel starts the transmission, the CFDTMSTSj.TMTSTS bit is cleared.

The transmission scanning procedure is performed again to search for the highest priority transmission message buffer from the beginning of the first CRC bit.

If an error occurs, either during transmission, or following the loss of arbitration, then during the error frame, the transmission scanning procedure is performed again to search for the highest priority transmission message buffer.

29.8.2.3 TX FIFO Transmission

One common FIFO buffer is assigned to CANFD module. The FIFO buffer can be linked to any normal TX message buffer position for this channel with the CFDCFCC.CFTML bits in the Common FIFO Configuration/Control Register if configured in TX mode.

When the transmission scan starts and the FIFO buffer corresponding to this TX message buffer is enabled, the relevant message in the FIFO buffer participates in the transmission scan.

Configuration of a TX message buffer linked to a FIFO buffer configured in TX mode should not be done.

(1) TX FIFO Operation

CAN messages can be written into the TX FIFO by writing to the corresponding FIFO Access registers.

When the value 0xFF is written into the corresponding FIFO Pointer Control Register, the message count of the related FIFO is incremented by 1.

Only write to the FIFO Pointer Control register after writing the complete message to the corresponding FIFO Access registers. If the message count matches the FIFO depth, the FIFO Full flag is set.

The oldest message in the TX FIFO is included in the scan for transmission by the corresponding CANFD module channel logic.

When a message is successfully transmitted from the TX FIFO, the message count value is decremented by 1. When all the messages from the FIFO are transmitted, the FIFO Empty flag is set.

The interrupt generation conditions for the TX FIFO buffer can be configured by configuring the CFDCFCC.CFIM bit in the corresponding Common FIFO Configuration/Control Register.

If CFDCFCC.CFIM bit is 0, then interrupt is generated when the last message is successfully transmitted from the TX FIFO buffer.

If CFDCFCC.CFIM bit is 1, then interrupt is generated for every successfully transmitted message from the TX FIFO buffer.

The Common FIFO can set interrupt when CAN frame transmission is complete.

The Common FIFO buffer configured in TX Mode can be disabled by clearing the CFDCFCC.CFE bit in the Common FIFO Configuration/Control Register. If this bit is cleared to 0, the FIFO Empty flag is set as follows:

- Immediately if the message from the TX FIFO is neither scheduled for the next transmission nor in transmission
- Following the transmission completion, the detection of an error on the CAN bus, loss of arbitration or transition to Channel or Global Halt mode if the transmission from the TX FIFO is already scheduled for transmission or already in transmission.

Note: The Common FIFO buffer is considered as disabled after clearing the CFDCFCC.CFE bit only when the Empty flag is set for the corresponding Common FIFO buffer.

Other possible messages pending from the TX FIFO are lost and their transmission must be requested again. Before CFDCFCC.CFE is set again, ensure that CFDCFSTS.CFEMP bit is set and that there are no pending abort from the TX FIFO.

When the CFDCFCC.CFE bit is cleared, the message read and write pointers of the FIFO are cleared and are no longer active. Therefore, all messages in the FIFO buffers are lost and no further message can be stored into the FIFO.

The FIFO transmission request procedure after configuration is shown in Figure 29.45.

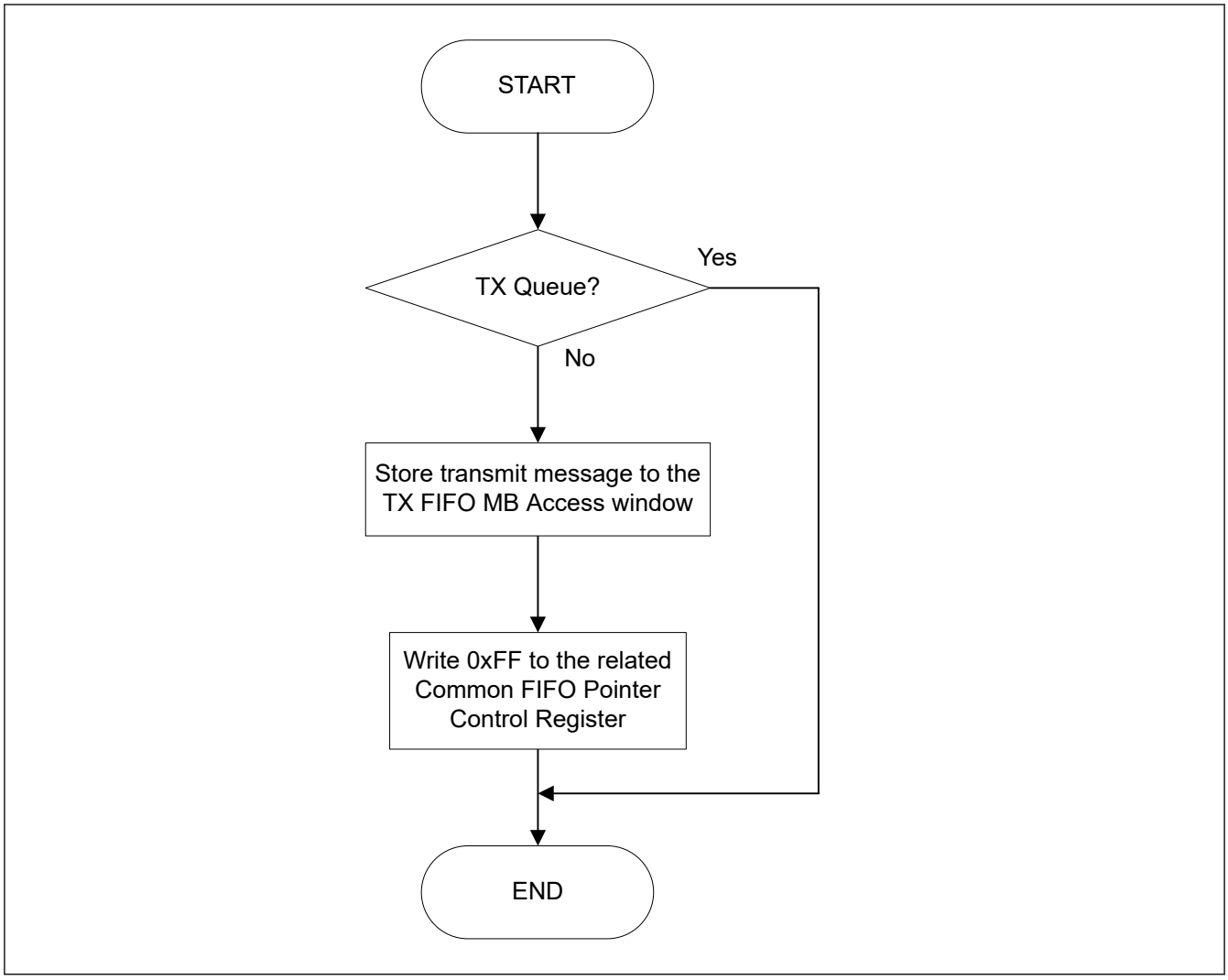

Figure 29.45 Request procedure for TX FIFO transmission

(2) Interval Timer for FIFO Transmission

For each Common FIFO in TX mode, it is possible to specify a delay between two consecutive messages that are configured for transmission from the same FIFO buffer. This delay is called interval time. This interval time starts after the first message has been successfully transmitted from the FIFO buffer after the CFDCFCC.CFE bit is set.

When the Common FIFO in TX mode is enabled, the first message is transmitted without considering this interval time.

The interval timer stops counting when:

- FIFO is disabled by clearing the CFDCFCC.CFE bit.
- CAN channel is in CH_RESET mode.

The interval time is specified by the CFDCFCC.CFITT value from 0 to 255 timer units in the Common FIFO Configuration/Control Register.

The timer unit can be defined based on two different source clocks for the interval timer. To disable the interval timer for FIFO transmission, select a value of 0.

The timer source can be selected with the configuration bit CFITSS in the Common FIFO Configuration/Control Register.

If CAN channel bit time clock is configured as the clock source, and the CAN channel enters CH_HALT, CH_RESET, or CH_SLEEP mode, the interval timer is stopped for that channel.

If peripheral clock is selected as the interval timer clock source, the interval timer is stopped only when the CAN channel is in CH_RESET or CH_SLEEP mode.

The reference clock can be used to configure the interval time in fixed time units. It is based on the peripheral clock. The reference clock prescaler value CFDGCFG.ITRCP in the Global Configuration Register defines the relation between the peripheral clock frequency/period and the reference clock period.

See Table 29.29 for CFDGCFG.ITRCP configuration values to achieve different reference clock periods based on the peripheral clock frequency and period.

Table 29.29 Configuration example for the reference clock of the FIFO interval timer

Reference clock/Peripheral clock	1 µs	100 µs	500 µs
16 MHz/62.5 ns	16	1600	8000
20 MHz/50 ns	20	2000	10000
32 MHz/31.25 ns	32	3200	16000
50 MHz/20 ns	50	5000	25000

The reference clock resolution can be specified by the interval timer reference clock resolution value CFDCFCC.CFITR in the Common FIFO Configuration/Control Register.

The interval time is based on the reference clock period multiplied by the configured value (x1 or x10). The reference clock based interval timer can be used to satisfy the requirements of the ISO 15765-2 Separation Time. The whole range for the separation time from 100 µs to 127 ms can be covered.

The specified interval time starts after successful transmission event (after EOF7 state of the CAN protocol).

When the interval time has elapsed, the next transmission request is raised by the related TX FIFO. Therefore, the interval time defines the minimum time between two messages transmitted from one FIFO.

The next message is sent at earliest after this interval time. Figure 29.46 shows an example timing of the internal processing.

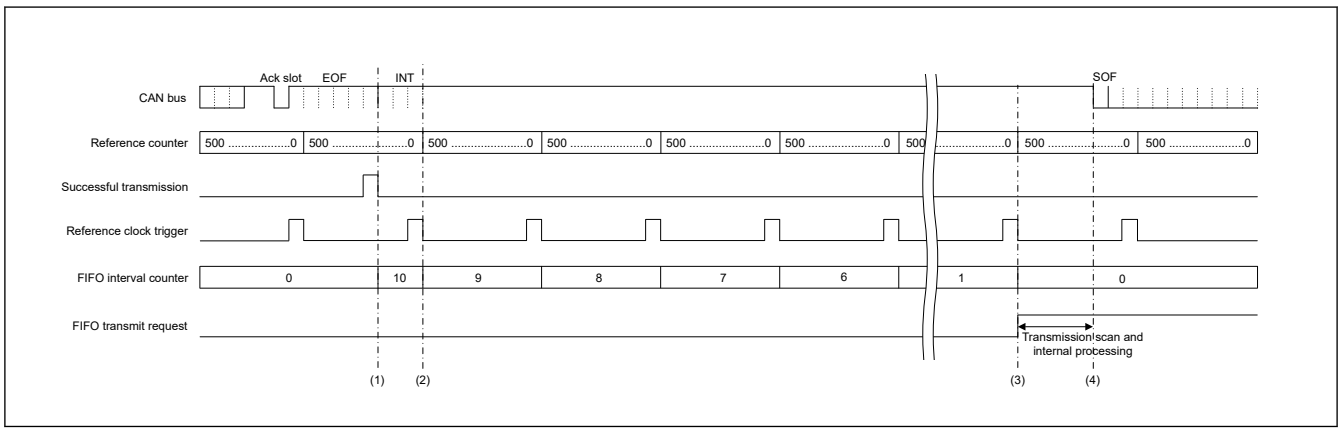

Figure 29.46 Example for interval processing time

The configuration for the timing in Figure 29.46 is as follows:

- Peripheral clock frequency = 50 MHz
- Interval timer reference clock (CFDGCFG.ITRCP) = 500 times
- Reference clock from the settings in Figure 29.46 = 10 µs
- Common FIFO interval timer source selection (CFDCFCC.CFITSS) = 0
- Common FIFO interval timer resolution (CFDCFCC.CFITR) = 0
- Common FIFO interval transmission time (CFDCFCC.CFITT) = 10 times
- Theoretical message separation interval = 100 µs

1. Internal FIFO interval timer is restarted with the occurrence of successful transmission result. This restart is not synchronized to the reference clock trigger. Therefore, the first interval is counting less or equal to 1 reference clock interval.
2. With the next reference clock trigger the FIFO interval timer is decremented.

3. When the FIFO interval timer reached the value 0, the FIFO transmit request is set.
4. When the FIFO is selected for transmission, the transmission starts. Due to internal processing, this usually takes less than 3 CAN bit time, between the internal FIFO transmit request set in step 3. and the actual transmission.

In the worst case when multiple events such as a reception scan, an internal message routing, a transmit scan on all channels occur, it can take up to 120 peripheral clock cycles.

As shown in Figure 29.46, it is not guaranteed that the minimum interval is always equal to the configured value. If a minimum time must never be breached, configure CFDCFCC.CFITT to the required minimum value plus 1.

If additional TX message buffers or TX FIFO are configured for transmission of the same channel, the real delay between two messages transmitted from a TX FIFO can be much longer than specified by the interval time. This is due to higher priority message transmission from these TX message buffers or TX FIFO.

Figure 29.47 shows a block diagram of the FIFO interval time generation circuit.

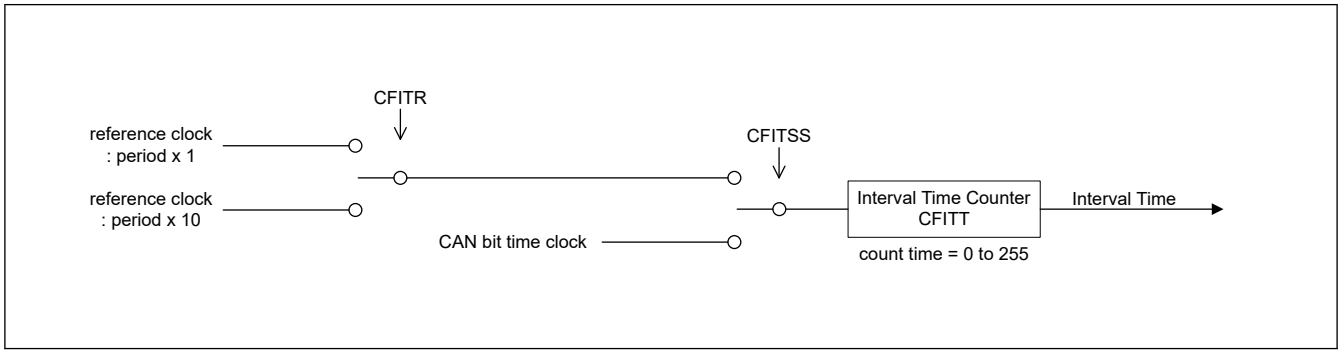

Figure 29.47 Block diagram of FIFO interval timer

29.8.2.4 TX Queue

Each enabled TX Queue for a specific channel consists of 3 to 4 TX message buffers, which are accessed through one access window.

- The first TX Queue can be configured with a depth of three up to four buffers and uses TX Message Buffer No. 0 as access window (referred to as TXQ)

All the TXQ messages enter the priority comparison for the transmission, which should be only ID Priority (CFDGCFG.TPRI = 0).

The registers for TXQ are:

- CFDTXQCC
- CFDTXQSTS
- CFDTXQPCTR

See related access registers TX Message Buffer ID Registers (TMID[m]), TX Message Buffer Pointer Registers (TMPTR[m]), TX Message Buffer Data Field 0 Registers, and TX Message Buffer Data Field 1 Registers (TMDF[0:1][m]) when access window TXQ0 is used.

The depth of each TXQ buffer can be configured by writing to the CFDTXQCC.TXQDC[1:0] bits of the TX Queue Configuration/Control Register. TXQ can be set from TXMB0 to TXMB3 as a queue buffer at the maximum.

The 4 available options for the depth configuration of TXQ buffer are:

- 0x00: TX Queue disabled
- 0x01: reserved
- 0x10: 3 Messages
- 0x11: 4 Messages

Do not access all the TX message buffers forming the TX Queue directly (except TX Message Buffer No. 0, which act as TX Queue access window).

When a system writes in TXQ, it writes in send data, after checking the state of TXQ.

Do not access or configure the related TX Message Buffer Control Registers.

The messages stored to the TX Queue access window are internally stored to a free buffer of the TX Queue.

When the buffer is full, no further access should be done to the queue, until it is no longer full. If access is a software write when the buffer of TXQ is full, send data is overwritten.

The TX Queue can be disabled by clearing the TXQE bit in the TX Queue Configuration/Control Register. If this bit is cleared, the TX Queue Empty flag is set as follows:

- Immediately if the message from the TX Queue is neither scheduled for the next transmission nor in transmission
- Following the transmission completion, the detection of an error on the CAN bus, loss of arbitration or transition to Channel or Global Halt mode if the transmission from the TX Queue is already scheduled for transmission or already in transmission.

Note: The TX Queue is disabled only when the Empty flag is set after clearing the TXQE bit for the corresponding TX Queue.

Other possible messages pending from the TX Queue are lost and their transmission must be requested again.

Before TXQE is set again, ensure that the CFDTXQSTS.TXQEMP bit is set and that there is no pending abort from the TX Queue.

When the TXQE bit is cleared, all messages in the TX Queue buffers are lost and no further message should be stored in the TX Queue.

When a message has been stored to the TX Queue, write 0xFF in the TX Queue Pointer Control Register. This sets the transmit request automatically and changes the internal message buffer pointer to the next free message buffer location of the TX Queue.

Note: If two messages with the same ID are stored in the TX Queue, the order of transmission of these messages can be different from the order in which they were stored in the TX Queue.

To avoid this condition, it is important to confirm that the previous message with the same ID was successfully transmitted before a new message with the same ID is stored in the TX Queue.

For the TX Queue, a dedicated interrupt can be enabled by setting the TXQIE bit of the TX Queue Configuration/Control Register.

The interrupt mode can be configured with the CFDTXQCC.TXQIM bit of the same register either to generate an interrupt for every transmitted message or for the last transmitted message.

The TX Queue transmission request procedure after configuration is shown in Figure 29.48.

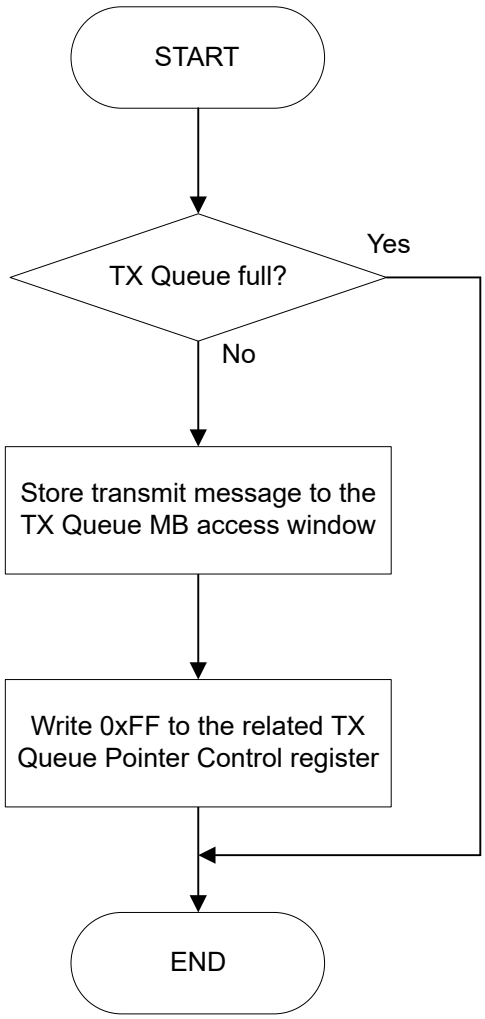

Figure 29.48 TX Queue transmission request

29.8.2.5 TX History List

The TX History List function records the information of the successfully transmitted message in the TX History List Buffers. Two TX History List buffers are provided and THL buffer can store up to 8 TX History List entries.

The CFDTHLCC.THLDTE bit of the TX History List Configuration/Control Register can be used to configure if only message information from TX FIFO or TX Queue is stored, or if all transmit message information from TX Queue, TX FIFO, or normal TX message buffers is stored in the TX History List.

Each transmit message can be individually configured for acceptance to the TX History List with the CFDCFID.THLEN bit in the Message Buffer Pointer Register.

The message information is stored to the TX History List Buffer of a CAN channel after the message is successfully transmitted.

Storing to the list is not synchronized with the status of CFDTMSTSj.TMTRF[1:0] bits in the TX Message Buffer Status Register.

Due to internal processing, the storage to the list can happen with a delay after the successful transmission indication.

Storing the TX History List data can be recognized by the condition that the THLIF is set to 1 when the THLIE bit is configured to 1 or when the TX History List counter CFDTHLSTS.THLMC[5:0] is increased.

In worst case when multi events like reception scan, internal message routing on happen.

- Maximum delay time from setting the CFDTMSTSj.TMTRF to store the TX History List data is 70 peripheral bus clock cycles.

The History list records the following information of a transmitted message:

- Buffer type:
  - 001: TX Message Buffer
  - 010: TX FIFO
  - 100: TX Queue
- Buffer number:
  TX message buffer, TX Queue message buffer or TX message buffer link for the Common FIFO buffer from which transmission occurred. The number depends on the buffer type. See Table 29.30.
- Transmission ID:
  Transmission pointer stored in the transmission message
- Transmit timestamp:
  Message timestamp captured at capture point as configured by CFDGFDCFG.TSCCFG.
- Transmission information label:
  Transmission information label stored in the transmission message.

Table 29.30 TX History List Buffer number entry

Buffer Number	BT[2:0] Buffer Type		
	001b TX Message Buffer	101b TX FIFO	100b TX Queue
00b	Message Buffer 0	Number shown corresponds to the common FIFO. TX Message Buffer Link CFTML of the related Common FIFO configuration	Number shown corresponds to the Message Buffer belonging to the TX Queue which the frame was transmitted
01b	Message Buffer 1		
10b	Message Buffer 2		
11b	Message Buffer 3		

The Transmission ID entry is used to identify which message of a TX FIFO or TX Queue has been successfully transmitted because the TX FIFO or TX Queue number alone is not sufficient.

Therefore, a unique number can be attached to each transmission message stored in a TX FIFO or TX Queue. This unique identification number should be written to the CFDCFFDCSTS.CFPTR[15:0] part of the Common FIFO Access Pointer Register for a TX FIFO or to the CFDTMFDCTRb.TMPTR[15:0] part of the TX Message Buffer Pointer Register of the TX Queue access window message buffer.

When the message is successfully transmitted, this identification number is stored together with the other message related information to the TX History List and can be read using the Transmission ID (TID) of the TX History List Access Register.

Also, for normal TX message buffers, the CFDTMFDCTRb.TMPTR[15:0] part of the TX Message Buffer Pointer Register is stored in the Transmission History List and the information label is the same.

Figure 29.49 shows a transmission preparation flow when TX History List is used.

Read access to the TX History List Access Register is done for every single entry.

After reading one entry, 0xFF must be written to the corresponding TX History List Pointer Control Register to be able to access the next entry until TX History List is empty.

Figure 29.50 shows an example flow for processing the TX History List information.

The TX History Lists have dedicated interrupts, which can be configured with the CFDTHLCC.THLIM bit of the corresponding TX History List Configuration/Control Register and enabled with the CFDTHLCC.THLIE bit of the same

registers, either to generate an interrupt when the History List reached a filling level of 75% or for every new TX History List entry.

An entry lost indication is flagged by the CFDTHLSTS.THLELT bit in the TX History List Status Register. The status of this bit is also shown by the THLES bit in the Global Error Flag Register.

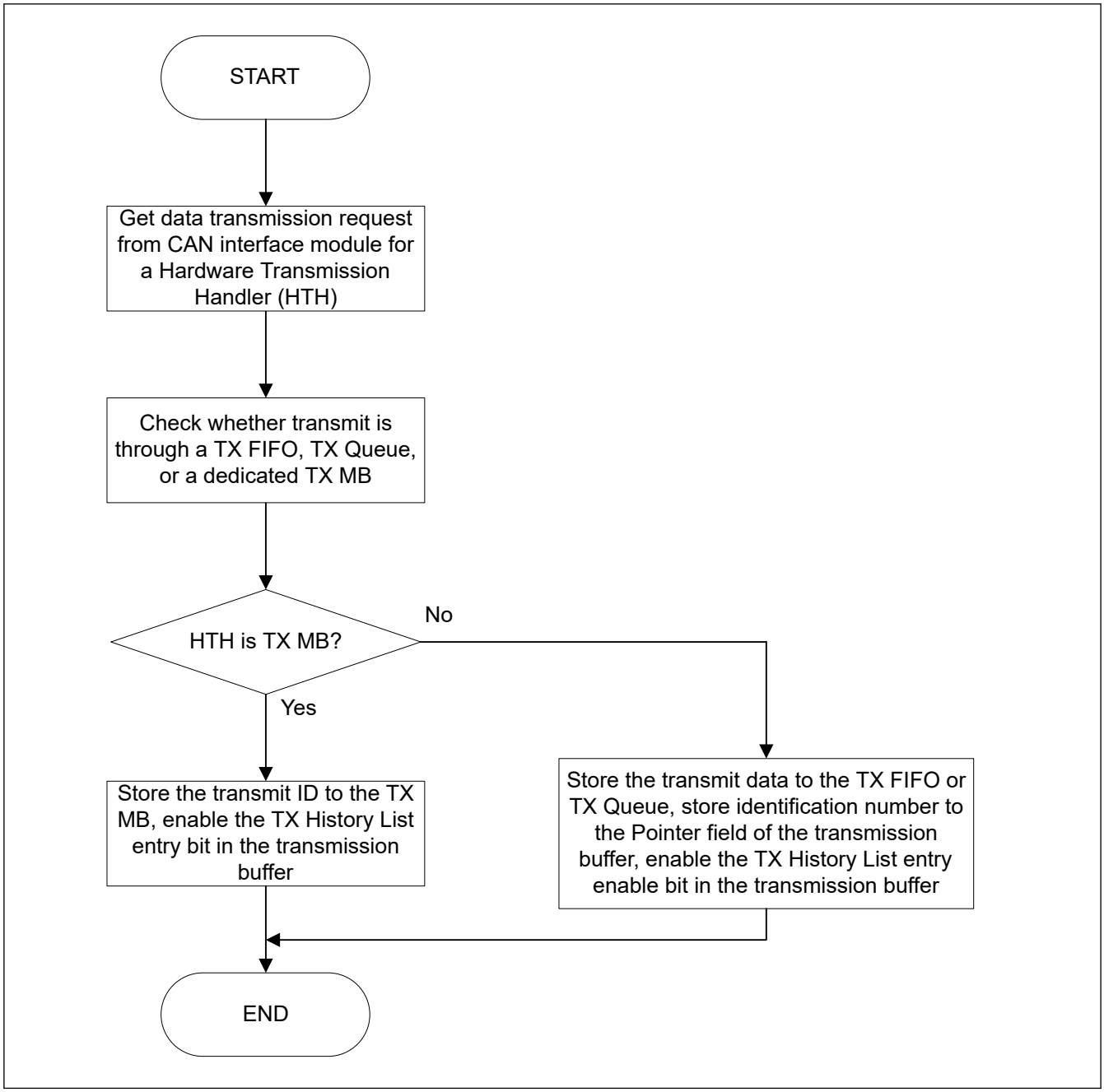

Figure 29.49 TX History List preparation flow

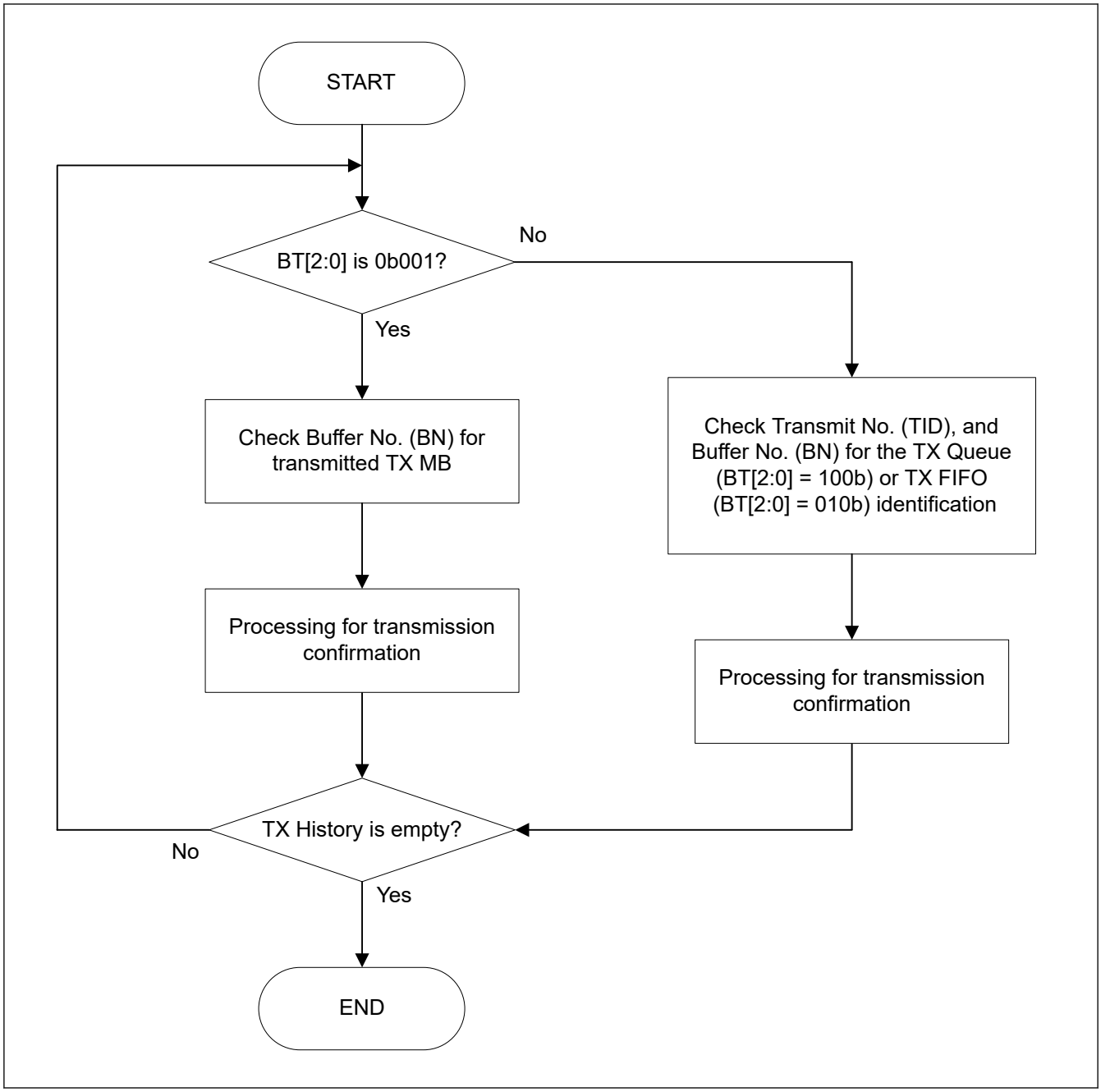

Figure 29.50 TX History List processing flow

29.8.2.6 TX Data Padding

This chapter is not valid for classical CAN.

If the data length code (DLC) of the transmitting message has a higher number of data bytes than the buffer size, the data bytes beyond the restricted range are replaced by bytes with the value of 0xCC.

This can happen for Common FIFO configured as (TX mode) when the transmit message DLC is higher than the CFDCFCC.CFPLS.

This can also happen in FD only mode, if a Classical frame is configured with a DLC bigger than 8.

29.9 Test Mode

The CANFD module can be configured into test modes to allow testing of certain features. These features are provided only for special purposes and care must be taken when configuring the CANFD module in test modes.

Note: All test modes are mutually exclusive unless it is explicitly stated that some functions can be enabled across other test modes.

Do not enable any combination of the various test modes specified in this section.

The test modes can be broadly split into 2 groups:

- Channel specific test modes
- Global test modes.

29.9.1 Channel Specific Test Modes

CAN channel can be configured into the following test modes:

- Basic test mode
- Listen-only mode
- Self-test mode 0 (External loop back mode)
- Self-test mode 1 (Internal loop back mode)
- Restricted operation mode.

29.9.1.1 Basic Test Mode

The basic test mode should be used when there is requirement for a particular test setting to be enabled other than when in Listen-only and Self-test modes.

29.9.1.2 Listen-only Mode

The ISO 11898-1 recommends an optional bus-monitoring mode. In this mode, the CAN channel is able to receive valid data frames and valid remote frames. However, it sends only recessive bits on the CAN bus and is not allowed to transmit.

If the CAN engine is required to send a dominant bit (ACK bit, overload flag, active error flag), the bit is routed internally so that the CAN engine monitors this as dominant. The external TX pin remains in recessive state.

This mode can be used for baud rate detection. In this mode, an error interrupt is generated if a bus error occurs and the interrupt is enabled.

In this mode, it is not permitted to request transmission from any normal TX message buffer or TX FIFO.

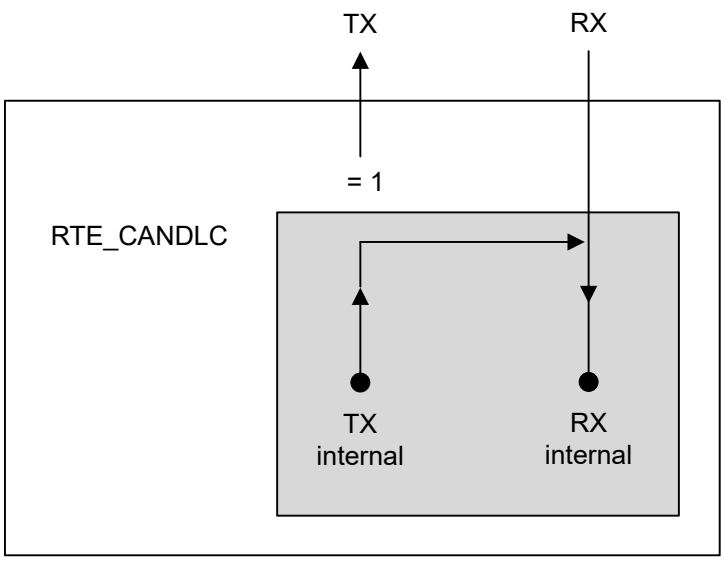

29.9.1.3 Self-test Mode 0 (External loopback mode)

In Self-test mode 0, the CAN engine treats its own transmitted messages as received messages through the CAN transceiver and stores them into its receive message buffers.

To be independent from external stimulation, the engine generates its own Acknowledge bit.

This test can be used for CAN transceiver tests and the RX/TX pins should be connected to the transceiver.

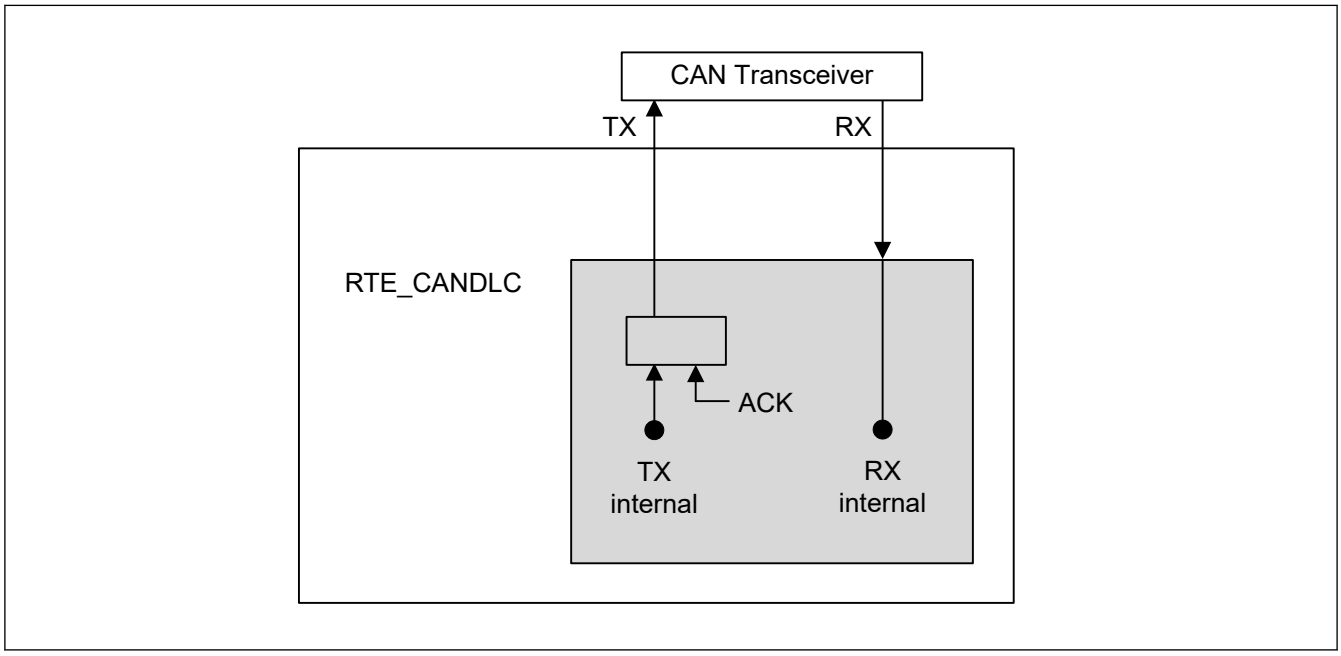

29.9.1.4 Self-test Mode 1 (Internal loopback mode)

In Self-test mode 1, the CAN engine treats its own transmitted messages as received messages and stores them into the receive buffer. This mode is provided for self-test functions. To be independent from external stimulation, the CAN engine generates its own Acknowledge bit. In this mode the CAN engine performs an internal feedback from TX internal to RX internal. The actual value of the external RX input is disregarded by the CAN engine.

The external TX pin outputs only recessive bits. The RX/TX pins do not need to be connected to the CAN bus or any external device.

Note: The channel pins are also disconnected from the internal CAN bus communication line.

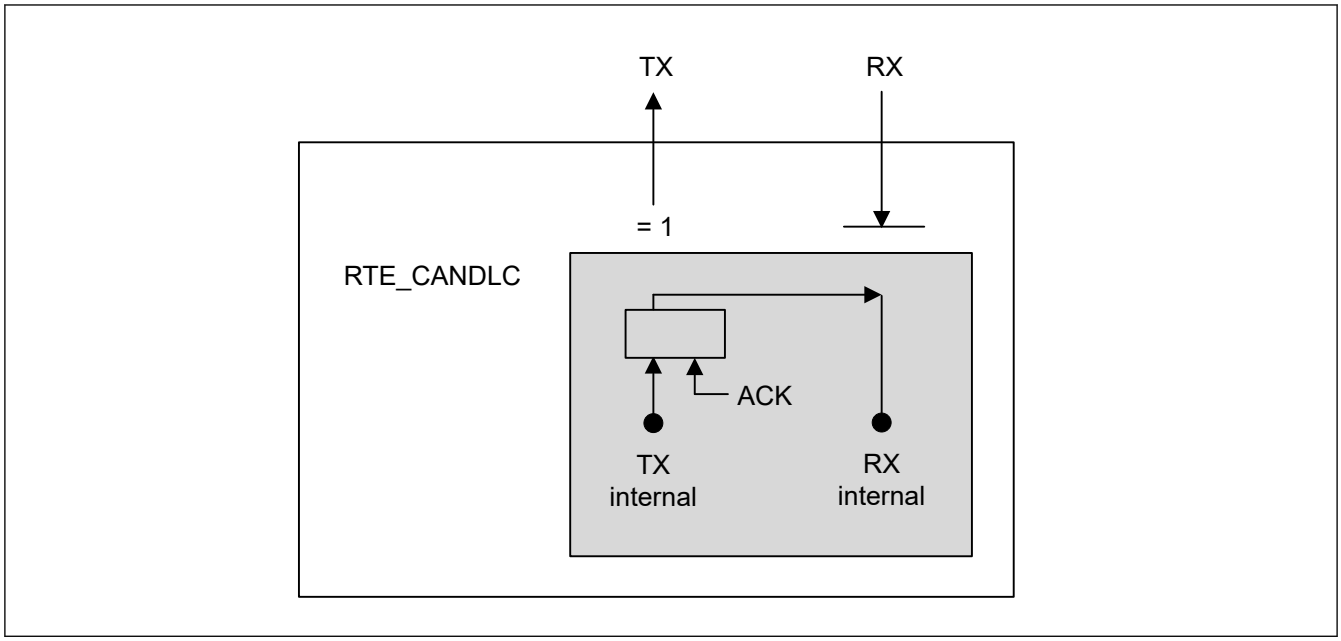

29.9.1.5 Restricted Operation Mode

This chapter is not valid for classical CAN.

In Restricted operation mode, the CAN node is able to receive valid data and remote frames generating the Acknowledge bit.

Active error or overload frames cannot be transmitted, instead it waits for the occurrence of bus idle condition to resynchronize itself to the CAN communication after an error or overload condition occurs.

Additionally, the Receive and Transmit Error Counter (REC and TEC) are frozen independently from the occurrence of errors. The mode is specified in ISO 11898-1 and the setting of transmit request is permitted.

29.9.2 Global Test Modes

The CANFD module can be configured into the following test modes:

- RAM test mode
- Bit Flip Test

The test modes in the following table are protected by a special software procedure to enable the mode. This software procedure enables write access to the test mode by a specific unlock key as shown in the table.

Test mode	Unlock key 1	Unlock key 2
RAM test mode	0x7575	0x8A8A

If the software sequence of the two consecutive unlock key write accesses (half-word or word access) is interrupted by any other write access to the register or if incorrect data is written to the Global Unlock Key Register, the corresponding test mode cannot be set and the sequence must be restarted.

After the two unlock key write accesses, the next write access should be to set the corresponding test mode enable bit. If this is not followed, the unlock mechanism reset and the test mode enable bit cannot be set and the unlock sequence must be restarted.

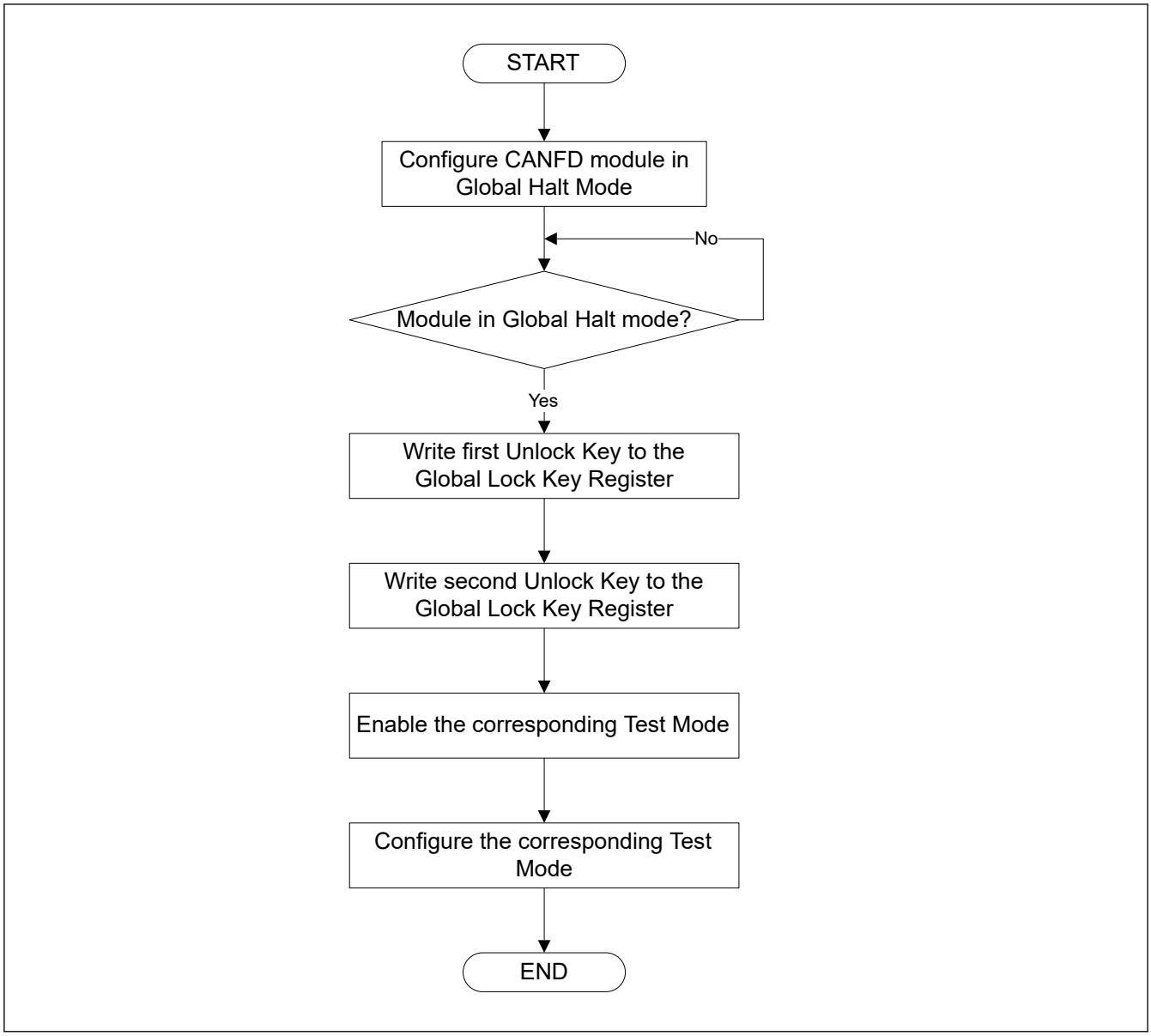

Figure 29.51 Unlock software protection routine

29.9.2.1 RAM Test Mode

The CANFD module can be configured in RAM test mode by setting the CFDGTSTCTR.RTME bit in the Global Test Control Register when the corresponding lock key is previously written. This is a special test mode, in which, the complete RAM area can be accessed.

Note: The actual RAM size is bigger than the RAM area initialized after a hardware reset. Therefore, ECC error flag (of the ECC macro) may be set if CPU reads data from this uninitialized RAM area while CANFD module is in RAM test mode.

In this mode, the RAM area is split into number of pages (pn) of 256 bytes, each which can be accessed with the CFDRPGACCk register.

The page should be selected for read/write access by writing to the CFDGTSTCFG.RTMPS[3:0] bits in the Global Test Control Register. Data can then be read from or written in to the RAM Test Page Access Registers.

Figure 29.52 shows the structure of the pages in the RAM when performing a RAM test mode.

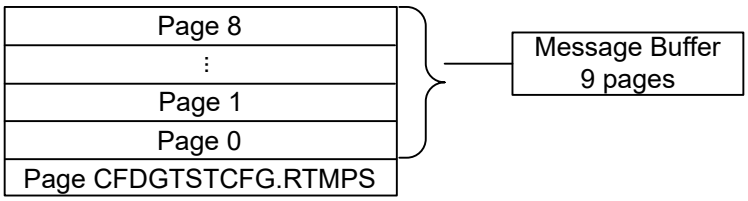

Figure 29.52 RAM page structure

The total available RAM size is 2072 bytes for the Message Buffer RAM.

The pn and CFDGTSTCFG.RTMPS[3:0] values for the MB RAMs are calculated in the following way:

pn = ceil (total RAM size in bytes / number of bytes per page)

- MB RAM:
  pn = ceil (2072 / 256) = 9 pages
  CFDGTSTCFG.RTMPS[3:0] = 0 to 8 inclusive

Figure 29.53 shows the software flow for RAM test mode.

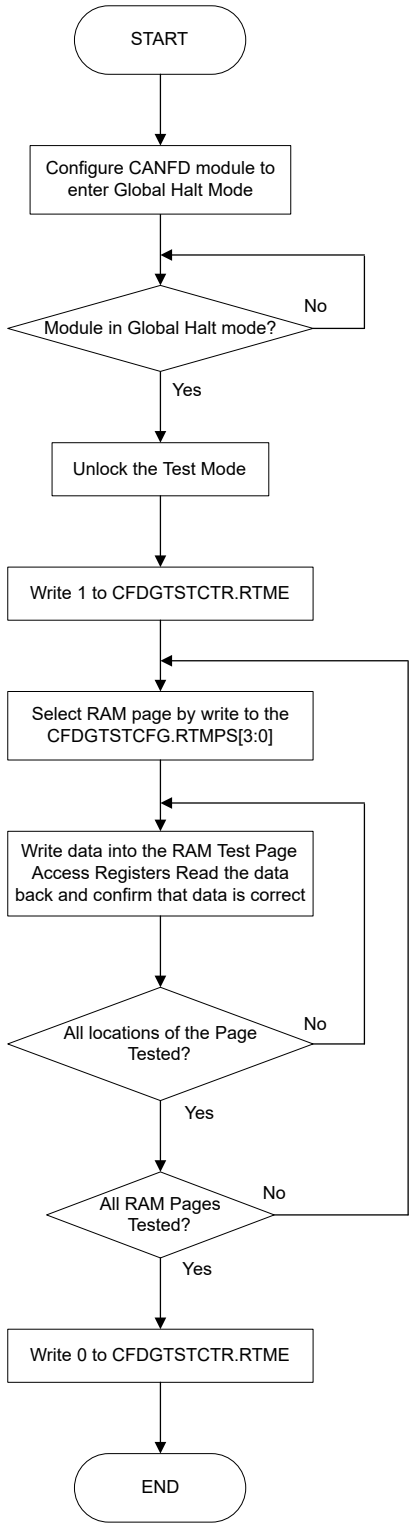

Note 1. Change into the following status before changing to RAMTEST.
- Cancel of a request for transmission.
- Disable of all the FIFO and TXQ.
- Clear of the receiving flag for a receiving buffer.

Figure 29.53 Software flow for RAM test mode

To exit this test mode, the CFDGTSTCTR.RTME bit must be cleared. The CFDGTSTCTR.RTME bit is cleared by writing 0 to it.

The CFDGTSTCTR.RTME bit is cleared automatically when the CANFD module enters Global Reset mode from the test mode.

29.9.2.2 Bit Flip Test

Bit Flip Test can invert the bit (the 1st bit of ID) of the beginning of the bit stream to receive.

If this function is used by a transmitting node, a bit error or an arbitration lost will occur.

If this function is used by a receiving node, a CRC error or a stuff error will occur.

Users should refer to the bit stuffing rule when using this feature, as there is the possibility of receiving a stuff error (due to the inversion) rather than a CRC error.

The following sequence should be used to perform CRC Error testing. In the sequence below CANFD module is the receiver.

1. Set the CFDC0CTR.BFT bit to 1, in order to invert the first bit of the incoming bit stream from sending node
2. Wait for the CANn_CHERR (n = 0) output signal to set to 1
3. Read either the CFDC0ERFL.CRCREG or the CFDC0FDCRC.CRCREG (depending on the received frame type: Classical or FD). The value should be different from the received CRC value of the reference message from sending node.
4. Check that CFDC0ERFL.CERR is 1

As the CRC generator logic is shared for RX and TX there is no need to create a separate TX CRC Error test.

29.10 Usage notes

29.10.1 Module-stop function

CANFD operation can be disabled or enabled using Module Stop Control Register C (MSTPCRC). The CANFD module is initially stopped after reset. Releasing the module-stop state enables access to the registers. For details, see section 10, Low Power Modes.

30. CANFD ECC (CNECC)

30.1 Overview

The MBRAM has ECC function of 2-bit ECC error detection and 1-bit ECC error detection and correction[*1]. The ECC module adds 7-bit ECC data to 32-bit RAM data.

Note 1. The ECC module cannot detect 3 or more bits error. It can, however, detect 1-bit or 2-bit error, but does not detect errors or correct erroneous bit to erroneous data by setting. When all RAM data is fixed to 0 or 1, it is detected as 2-bit ECC error.

30.2 Register Descriptions

30.2.1 EC710CTL : ECC Control Register

Base address: ECCMB = 0x4012_F000

Offset address: 0x00

Bit position:	31	30	29	28	27	26	25	24	23	22	21	20	19	18	17	16
Bit field:	—	—	—	—	—	—	—	—	—	—	—	—	—	—	ECDEDF0	ECSEDF0
Value after reset:	0	0	0	0	0	0	0	0	0	0	0	0	0	0	0	0

Bit position:	15	14	13	12	11	10	9	8	7	6	5	4	3	2	1	0
Bit field:	EMCA[1:0]		—	—	ECOVFF	ECER2C	ECER1C	—	—	ECERVF	EC1ECP	EC2EDIC	EC1EDIC	ECER2F	ECER1F	ECEMF
Value after reset:	0	0	0	0	0	0	0	0	0	0	0	1	0	0	0	0

Bit	Symbol	Function	R/W
0	ECEMF	ECC Error Message Flag 0: There is no bit error in the present RAM output data 1: There is a bit error in the present RAM output data	R
1	ECER1F	1-bit ECC Error Detection and Correction Flag 0: After clearing this bit, 1-bit error correction has not detected and corrected 1: 1-bit error has detected and corrected	R
2	ECER2F	2-bit ECC Error Detection Flag 0: After clearing this bit, 2-bit error has not detected 1: 2-bit error has detected	R
3	EC1EDIC	1-bit ECC Error Detection Interrupt Control 0: Disable 1-bit error detection interrupt request 1: Enable 1-bit error detection interrupt request	R/W
4	EC2EDIC	2-bit ECC Error Detection Interrupt Control 0: Disable 2-bit error detection interrupt request 1: Enable 2-bit error detection interrupt request	R/W
5	EC1ECP	1-bit ECC Error Correction Permission 0: Enable error correction at 1-bit error detection 1: Disable error correction at 1-bit error detection	R/W
6	ECERVF	ECC Error Detection Enable 0: Disable error detection 1: Enable error detection	R/W
8:7	—	These bits are read as 0. The write value should be 0.	R/W
9	ECER1C	Accumulating ECC Error Detection and Correction Flag Clear 0: No clear flag 1: Clear accumulating ECC error detection and correction flag	R/W
10	ECER2C	2-bit ECC Error Detection Flag Clear 0: No clear flag 1: Clear 2-bit ECC error detection flag	R/W

Bit	Symbol	Function	R/W
11	ECOVFF	ECC Overflow Detection Flag 0: No clear flag 1: Clear flag	R
13:12	—	These bits are read as 0. The write value should be 0.	R/W
15:14	EMCA[1:0]	ECC Error Detection Enable Access Control 01: Can write ECC Error Detection Control (ECERVF) bit Others: Cannot write ECERVF bit	R/W
16	ECSEDF0	1-bit ECC Error Address Detection Flag 0: 1-bit error has not occurred after reset or clearing ECER1F bit 1: 1-bit error has occurred and the address was captured	R
17	ECDEDF0	2-bit ECC Error Address Detection Flag 0: 2-bit error has not occurred after reset or clearing ECER2F bit 1: 2-bit error has occurred and the address was captured	R
31:18	—	These bits are read as 0. The write value should be 0.	R/W

ECEMF bit (ECC Error Message Flag)

The ECEMF bit shows that there is error in the present read data bus. This bit is updated by every RAM output data.

When RAM output data is undefined and the ECERVF bit is set to 1, the value of this bit is undefined.

[Setting condition]

There is a bit error in the present RAM output data under the condition that error detection is enabled.

[Clearing condition]

- Under the condition that there is no 1-bit error in input data to decode circuit
- When ECC error detection is disabled (ECERVF = 0).

ECER1F bit (1-bit ECC Error Detection and Correction Flag)

The ECER1F bit shows that the bit errors are detected in one part of the RAM read data [38:0] at RAM read access when error detection is enabled.

When the 1-bit error interrupt output is enabled, error interrupt is generated by setting this flag.

This bit is read-only, so writing 1 or 0 has no effect.

To clear this bit, write 1 to the ECER1C bit.

When 1-bit error is detected again under the condition that this bit is set, the interrupt is not generated.

[Setting condition]

- When error detection is enabled and there is 1-bit error in the RAM output data (when not setting ECER1C = 1).

[Clearing condition]

- Writing ECER1C = 1
- When ECC error detection is disabled (ECERVF = 0).

ECER2F bit (2-bit ECC Error Detection Flag)

The ECER2F bit shows that the bit errors are detected in two parts of the RAM read data [38:0] at RAM read access when the error detection is enabled.

When the 2-bit error interrupt output is enabled, error interrupt is generated by setting this flag.

This bit is read-only, so writing 1 or 0 has no effect.

To clear this bit, write 1 to the ECER2C bit.

When 2-bit error is detected again under the condition that this bit is set, the interrupt is not generated.

[Setting condition]

- When error detection is enabled and there is 2-bit error in the RAM output data (when not setting ECER2C = 1).

[Clearing condition]

- Writing ECER2C = 1
- When ECC error detection is disabled (ECERVF = 0).

EC1EDIC bit (1-bit ECC Error Detection Interrupt Control)

The EC1EDIC controls the interrupt output at detecting 1-bit error. By setting 1 to this bit, the 1-bit error interrupt is outputted when 1-bit error detected.

EC2EDIC bit (2-bit ECC Error Detection Interrupt Control)

The EC2EDIC controls the interrupt output at detecting 2-bit error. By setting 1 to this bit, the 2-bit error interrupt is output when 2-bit error is detected.

EC1ECP bit (1-bit ECC Error Correction Permission)

The EC1ECP sets the permission to correct the 1-bit error when ECC error detection and correction is valid. By setting 1 to this bit, the non-corrected data is output if 1-bit error is detected.

ECERVF bit (ECC Error Detection Enable)

Setting the ECERVF bit to 1 enables the detection of error. The correction of output data and the interrupt output depend on setting of the EC1ECP bit, EC2EDIC bit, and EC1EDIC bit.

The write access to this bit is valid when the write value of the EMCA[1:0] is 01b. So only the 16 bits or 32 bits operation command is valid for write access to this bit.

ECER1C bit (Accumulating ECC Error Detection and Correction Flag Clear)

The ECER1C bit clears the status flag of the ECER1F bit.

The read value is always 0. By writing 0, the internal condition is not changed. When the competition between writing 1 to this bit and setting the ECER1F bit, the former has priority.

The ECER1F bit is cleared by writing 1 to this bit while the ECER1F bit is set. Additionally, the Overflow Detection flag (ECOVFF), ECC Dual Bit Error flag (ECDEDF0) and ECC Single Bit Error flag (ECSEDF0) are also cleared.

ECER2C bit (2-bit ECC Error Detection Flag Clear)

The ECER2C bit clears the status flag of the ECER2F bit.

The read value is always 0. By writing 0, the internal condition is not changed. When the competition between writing 1 to this bit and setting the ECER2F bit, the former has priority.

The ECER2F bit is cleared by writing 1 to this bit while the ECER2F bit is set. Additionally, the Overflow Detection flag (ECOVFF), ECC Dual Bit Error flag (ECDEDF0), and ECC Single Bit Error flag (ECSEDF0) are also cleared.

ECOVFF bit (ECC Overflow Detection Flag)

The ECOVFF bit is set and the overflow interruption is output by detecting the new error address under the condition that error address is already captured in the EC710EAD0 register. The overflow interrupt is output again when this bit is set and new error is detected.

This bit is read-only, so writing 1 or 0 has no effect.

To clear this bit, write 1 to the ECER2C bit and the ECER1C bit.

[Setting condition]

- When new error address is captured under the condition that error address is already captured in the EC710EAD0 register (when not setting ECER2C = 1 or ECER1C = 1).

[Clearing condition]

- Writing ECER2C = 1 or ECER1C = 1
- When ECC error detection is disabled (ECERVF = 0).

EMCA[1:0] bits (ECC Error Detection Enable Access Control)

The EMCA[1:0] bits are the write trigger reserved bits for the ECERVF bit. The read value is always 0. When the value of these bits is 01b, it is possible to have write access to the ECERVF bit. If these bits are not 01b, write access to the ECERVF bit is ignored and the value is not written.

ECSEDF0 bit (1-bit ECC Error Address Detection Flag)

The ECSEDF0 bit shows that the error is captured in the error address register when error detection is valid. This bit is set by 1-bit error detection.

When 1-bit error is detected after the 2-bit error address is already captured in the EC710EAD0 register, this bit is not updated but the EC710EAD0 register is updated.

This bit is read-only, so writing 1 or 0 has no effect. To clear this bit, write 1 to the ECER1C bit.

[Setting condition]

- When there is 1-bit error in the RAM output data and error address is captured in EC710EAD0 under the condition that the error detection is permitted (when not setting ECER1C = 1).

[Clearing condition]

- Writing ECER1C = 1
- When ECC error detection is disabled (ECERVF = 0).

ECDEDF0 bit (2-bit ECC Error Address Detection Flag)

The ECDEDF0 bit shows that the error is captured in the error address register when error detection is valid. This bit is set by 2-bit error detection.

When 2-bit error is detected after the 1-bit error address is already captured in the EC710EAD0 register, this bit is not updated but the EC710EAD0 register is updated.

This bit is read-only, so writing 1 or 0 has no effect. To clear this bit, write 1 to the ECER2C bit.

[Setting condition]

- When there is 2-bit error in the RAM output data and error address is captured in EC710EAD0 under the condition that the error detection is permitted (when not setting ECER2C = 1).

[Clearing condition]

- Writing ECER2C = 1
- When ECC error detection is disabled (ECERVF = 0).

30.2.2 EC710TMC : ECC Test Mode Control Register

Base address: ECCMB = 0x4012_F000

Offset address: 0x04

Bit position:	15	14	13	12	11	10	9	8	7	6	5	4	3	2	1	0
Bit field:	ETMA[1:0]		—	—	—	—	—	—	ECTMCE	—	—	—	—	—	ECDCS	—
Value after reset:	0	0	0	0	0	0	0	0	0	0	0	0	0	0	0	0

Bit	Symbol	Function	R/W
0	—	This bit is read as 0. The write value should be 0.	R/W
1	ECDCS	ECC Decode Input Select 0: Input lower 32 bits of RAM output data to data area of decode circuit 1: Input ECEDB31-0 in EC710TED register to data area of decode circuit	R/W
6:2	—	These bits are read as 0. The write value should be 0.	R/W

Bit	Symbol	Function	R/W
7	ECTMCE	ECC Test Mode Control Enable 0: The access to test mode register and bit is disabled 1: The access to test mode register and bit is enabled	R/W
13:8	—	These bits are read as 0. The write value should be 0.	R/W
15:14	ETMA[1:0]	ECC Test Mode Bit Access Control These bits enable or disable write access to ECTMCE bit.	R/W

ECDCS bit (ECC Decode Input Select)

The ECDCS bit selects either the lower 32 bits data value from RAM or value from the internal test register (EDEDB[31:0] in EC710TED) as input signal to decoder.

The write access to this bit is valid under the condition of ECTMCE = 1 (it is possible to set them at the same time.)

This bit is cleared by setting ECTMCE = 0.

ECTMCE bit (ECC Test Mode Control Enable)

The ECTMCE bit selects the access enable or disable to test register and test control bit.

The write access to this bit is valid under the condition that the value of the ETMA[1:0] bits is 10b.

ETMA[1:0] bits (ECC Test Mode Bit Access Control)

The ETMA[1:0] bits are the write trigger reserved bits to the ECTMCE bit. The read value is always 0. When the value of these bits is 10b, it is possible to have write access to the ECTMCE bit. If these bits are not 10b, the write access to the ECTMCE bit is ignored and the value is not written.

30.2.3 EC710TED : ECC Test Substitute Data Register

Base address: ECCMB = 0x4012_F000

Offset address: 0x0C

Bit position:	31																														0
Bit field:	ECEDB[31:0]																														
Value after reset:	0	0	0	0	0	0	0	0	0	0	0	0	0	0	0	0	0	0	0	0	0	0	0	0	0	0	0	0	0	0	0

Bit	Symbol	Function	R/W
31:0	ECEDB[31:0]	ECC Test Substitute Data Substitute data in ECC test mode.	R/W

This register is for the 32 bits data for ECC decode. It is possible to read and write using 32 bits operation command when ECTMCE = 1. When ECTMCE = 0, all bits are always 0.

ECEDB[31:0] bits (ECC Test Substitute Data)

When ECDCS in EC710TMC register is 1, the value of this register is bits [31:0] of the input data to the decode circuit.

30.2.4 EC710EAD0 : ECC Error Address Register

Base address: ECCMB = 0x4012_F000

Offset address: 0x10

Bit position:	31	30	29	28	27	26	25	24	23	22	21	20	19	18	17	16
Bit field:	—	—	—	—	—	—	—	—	—	—	—	—	—	—	—	—
Value after reset:	0	0	0	0	0	0	0	0	0	0	0	0	0	0	0	0

Bit position:	15	14	13	12	11	10	9	8	7	6	5	4	3	2	1	0
Bit field:	—	—	—	—	—	—	ECEAD[9:0]									
Value after reset:	0	0	0	0	0	0	0	0	0	0	0	0	0	0	0	0

Bit	Symbol	Function	R/W
9:0	ECEAD[9:0]	ECC Error Address	R
31:10	—	These bits are read as 0.	R

This is a read-only register to hold the ECC error address.

ECEAD[9:0] bits (ECC Error Address)

When ECC error is detected, RAM address is captured by the detected signal as a trigger and is held as the error occurring address. The error address is not captured when the error occurred again to the one held by the same factor.

If 2-bit error occurred under the condition that 1-bit error address is already captured, the 2-bit error address is over-written and the ECDEDF0 bit is set to 1.

If 1-bit error occurred under the condition that 2-bit error address is already captured, the 1-bit error address is not overwritten and the ECSEDF0 bit is not set to 1.

30.3 Operation

30.3.1 ECC Function Setting

Figure 30.1 shows a procedure for ECC function setting.

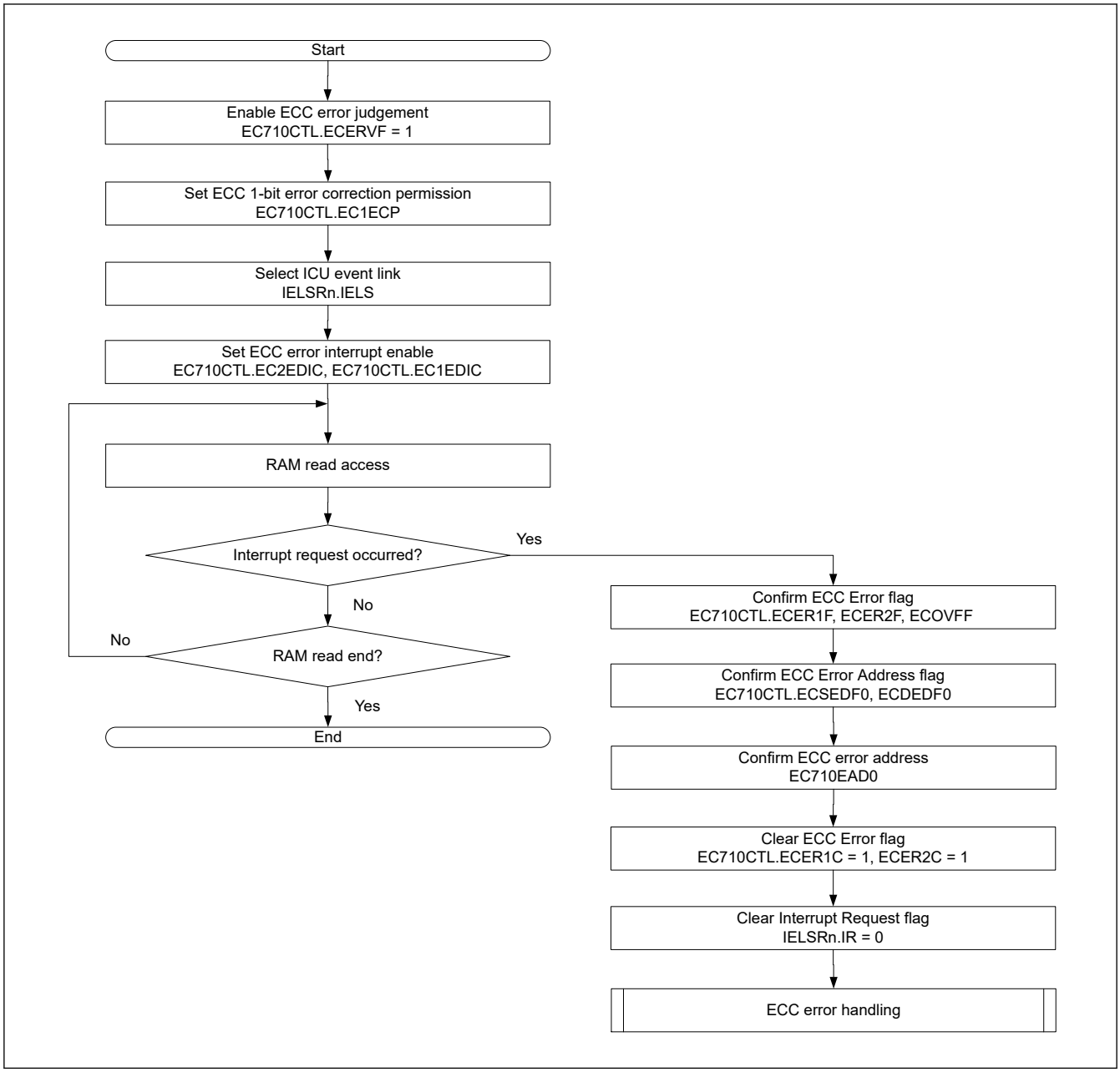

Figure 30.1 Setting procedure for ECC function

30.3.2 ECC Decoder Testing

ECC interrupts can be intentionally generated by ECC test mode. Figure 30.2 shows a procedure for ECC decoder testing.

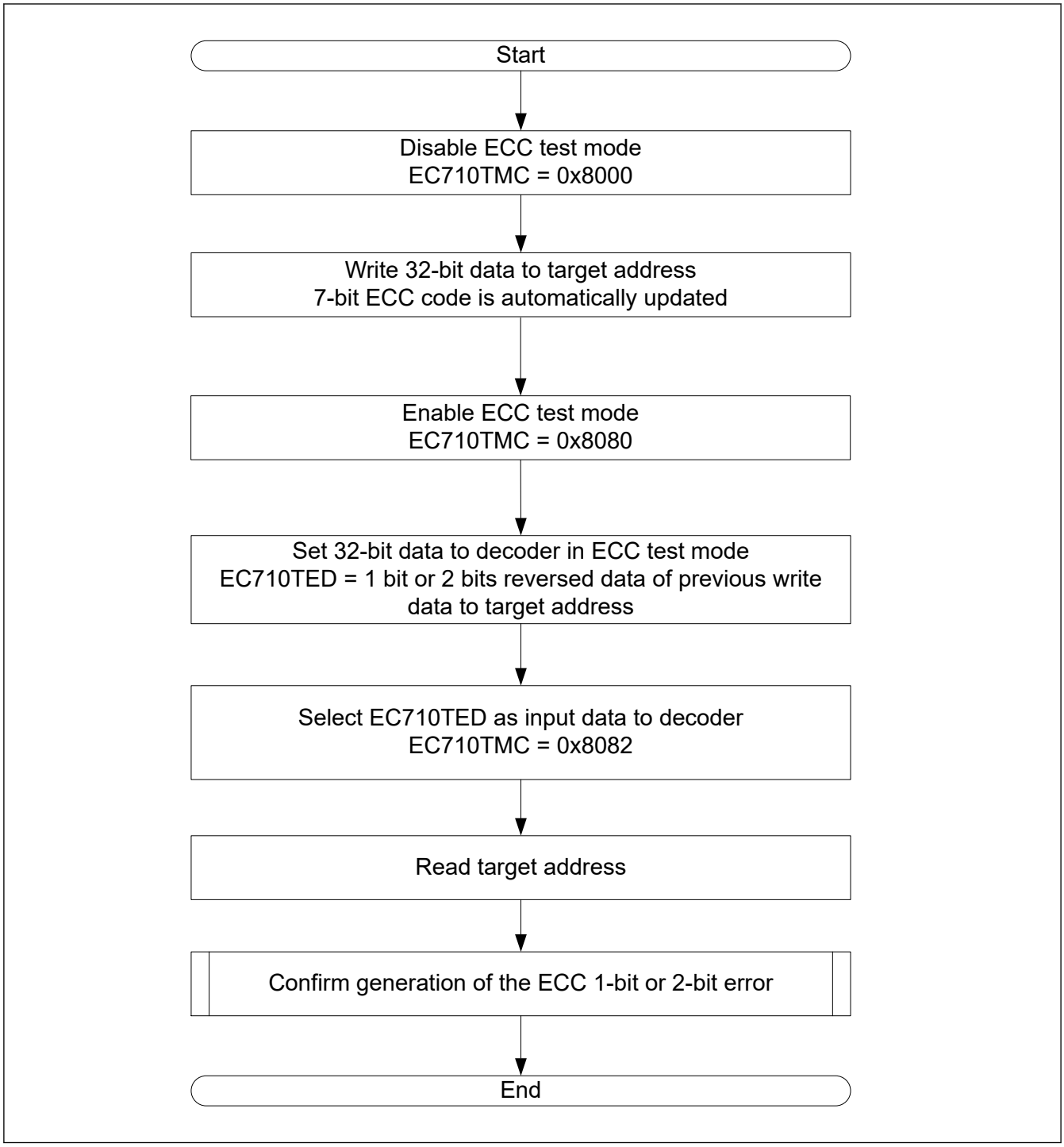

Figure 30.2 Testing procedure for ECC decoder

30.4 Interrupts

The ECC module issues one interrupt request:

- CANn_MRAM_ERI (n = 0)

Interrupt sources for the interrupt request include:

- 1-bit ECC error
- 2-bit ECC error
- ECC error overflow.

31. Serial Peripheral Interface (SPI)

31.1 Overview

The Serial Peripheral Interface (SPI) has 3 channels. The SPI provides high-speed full-duplex synchronous serial communications with multiple processors and peripheral devices. Table 31.1 lists the SPI specifications, Figure 31.1 shows a block diagram, and Table 31.2 lists the I/O pins.

Table 31.1 SPI specifications (1 of 2)

Parameter	Specifications
Number of channels	Three channel
SPI transfer functions	• Use of MOSI (master out/slave in), MISO (master in/slave out), SSL (slave select), and RSPCK (SPI clock) signals allows serial communications through SPI operation (4-wire method) or clock synchronous operation (3-wire method) • Transmit-only operation available • Receive-only operation is available (Slave mode only) • Communication mode selectable to full-duplex or transmit-only • RSPCK polarity switching • RSPCK phase switching
Data format	• MSB-first or LSB-first selectable • Transfer bit length selectable to 8, 9, 10, 11, 12, 13, 14, 15, 16, 20, 24, or 32 bits • 128-bit transmit and receive buffers • Up to four frames transferable in one round of transmission or reception (each frame consisting of up to 32 bits) • Byte swap operating function • Transmit/receive data can be inverted.
Bit rate	• In master mode, the on-chip baud rate generator generates RSPCK by frequency-dividing PCLKA (the division ratio ranges from divided by 2 to divided by 4096) • In slave mode, the minimum PCLKA clock divided by 4 can be input as RSPCK (PCLKA divided by 4 is the maximum RSPCK frequency) Width at high level: 2 PCLKA cycles; width at low level: 2 PCLKA cycles
Buffer configuration	• Double buffer configuration for the transmit and receive buffers • 128 bits for the transmit and receive buffers
Error detection	• Mode fault error detection • Underrun error detection • Overrun error detection*1 • Parity error detection
SSL control function	• Four SSL pins (SSLni: SSLn0 to SSLn3) (n = A) for each channel • In single-master mode, SSLn0 to SSLn3 pins are output • In multi-master mode, SSLn0 pin for input, and SSLn1 to SSLn3 pins either for output or unused • In slave mode, SSLn0 pin for input and SSLn1 to SSLn3 pins unused • Controllable delay from SSL output assertion to RSPCK operation (RSPCK delay) Range: 1 to 8 RSPCK cycles (set in RSPCK-cycle units) • Controllable delay from RSPCK stop to SSL output negation (SSL negation delay) Range: 1 to 8 RSPCK cycles (set in RSPCK-cycle units) • Controllable wait for next-access SSL output assertion (next-access delay) Range: 1 to 8 RSPCK cycles (set in RSPCK-cycle units) • Function for changing SSL polarity • Delay between frames in burst transfer is settable
Control in master transfer	• Transfers of up to eight commands each can be executed sequentially in looped execution • For each command, the following can be set: SSL signal value, bit rate, RSPCK polarity and phase, transfer data length, MSB- or LSB-first, burst, RSPCK delay, SSL negation delay, and next-access delay • Transfers can be initiated by writing to the transmit buffer • MOSI signal value specifiable in SSL negation • RSPCK auto-stop function
Interrupt sources	Interrupt sources: • Receive buffer full interrupt • Transmit buffer empty interrupt • SPI error interrupt (mode fault error, overrun error, parity error) • SPI idle interrupt (SPI idle) • Transmission-complete interrupt

Table 31.1 SPI specifications (2 of 2)

Parameter	Specifications
Event link function	The following events can be output to the Event Link Controller (ELC): ● Receive buffer full signal ● Transmit buffer empty signal ● Mode fault, underrun, overrun, or parity error signal ● SPI idle signal ● Communication end signal
Other functions	● Switching between CMOS output and open-drain output ● SPI initialization function ● Loopback mode
Module-stop function	Module-stop state can be set to reduce power consumption
TrustZone Filter	Security attribution can be set

Note 1. In master reception and when the RSPCK auto-stop function is enabled, an overrun error does not occur because the transfer clock is stopped on overrun error detection.

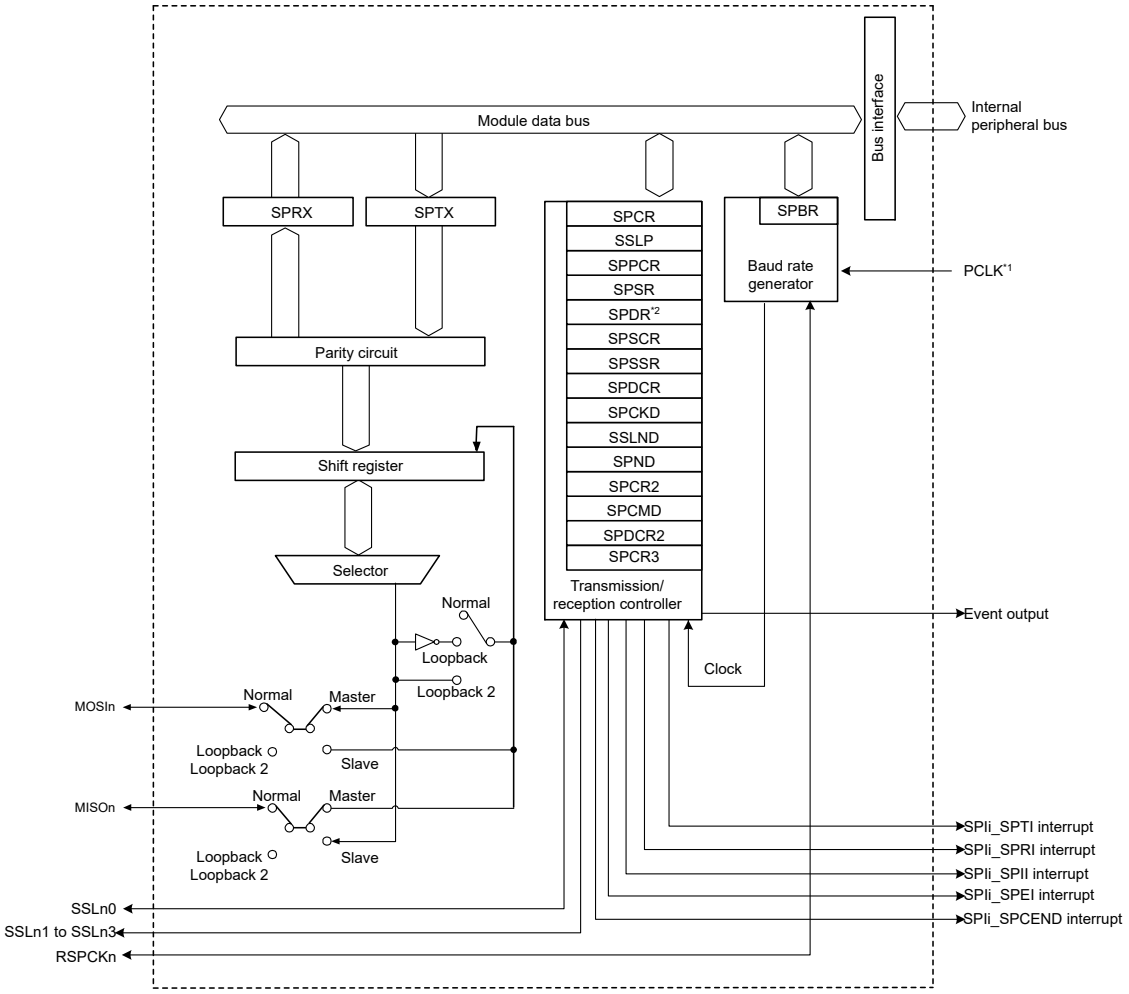

Note: i = 0, 1, 2
Note: n = A, B, C
Note 1. PCLK = PCLKA
Note 2. SPDR = SPDR/SPDR_HA/SPDR_BY

Figure 31.1 SPI block diagram

The SPI automatically switches the I/O direction of the SSLn0 pin. SSLn0 is set as an output when the SPI is a single master, and as an input when the SPI is a multi-master or a slave. The RSPCKn, MOSIn, and MISOn pins are automatically set as inputs or outputs based on the master or slave setting and the level input on the SSLn0 pin. For details, see section 31.3.2. Controlling the SPI Pins.

Table 31.2 SPI I/O pins

Channel	Pin name	I/O	Description
SPI0	RSPCKA	I/O	Clock input/output pin
	SSLA0	I/O	Slave selection input/output
	SSLA1 to SSLA3	Output	Slave selection output
	MOSIA	I/O	Master transmit data input/output
	MISOA	I/O	Slave transmit data input/output
SPI1	RSPCKB	I/O	Clock input/output pin
	SSLB0	I/O	Slave selection input/output
	SSLB1 to SSLB3	Output	Slave selection output
	MOSIB	I/O	Master transmit data input/output
	MISOB	I/O	Slave transmit data input/output
SPI2	RSPCKC	I/O	Clock input/output pin
	SSLC0	I/O	Slave selection input/output
	SSLC1 to SSLC3	Output	Slave selection output
	MOSIC	I/O	Master transmit data input/output
	MISOC	I/O	Slave transmit data input/output

31.2 Register Descriptions

31.2.1 SPCR : SPI Control Register

Base address: SPIn = 0x4011_A000 + 0x0100 × n (n = 0 to 2)

Offset address: 0x00

Bit position:	7	6	5	4	3	2	1	0
Bit field:	SPRIE	SPE	SPTIE	SPEIE	MSTR	MODFEN	TXMD	SPMS
Value after reset:	0	0	0	0	0	0	0	0

Bit	Symbol	Function	R/W
0	SPMS	SPI Mode Select 0: Select SPI operation (4-wire method) 1: Select clock synchronous operation (3-wire method)	R/W
1	TXMD	Communications Operating Mode Select 0: Select full-duplex synchronous serial communications 1: Select serial communications with transmit-only	R/W
2	MODFEN	Mode Fault Error Detection Enable 0: Disable detection of mode fault errors 1: Enable detection of mode fault errors	R/W
3	MSTR	SPI Master/Slave Mode Select 0: Select slave mode 1: Select master mode	R/W
4	SPEIE	SPI Error Interrupt Enable 0: Disable SPI error interrupt requests 1: Enable SPI error interrupt requests	R/W

Bit	Symbol	Function	R/W
5	SPTIE	Transmit Buffer Empty Interrupt Enable 0: Disable transmit buffer empty interrupt requests 1: Enable transmit buffer empty interrupt requests	R/W
6	SPE	SPI Function Enable 0: Disable SPI function 1: Enable SPI function	R/W
7	SPRIE	SPI Receive Buffer Full Interrupt Enable 0: Disable SPI receive buffer full interrupt requests 1: Enable SPI receive buffer full interrupt requests	R/W

SPMS bit (SPI Mode Select)

The SPMS bit selects SPI operation (4-wire method) or clock synchronous operation (3-wire method).

The SSLn0 to SSLn3 pins are not used in clock synchronous operation. The RSPCKn, MOSIn, and MISOn pins handle communications. For clock synchronous operation in master mode (MSTR = 1), the SPCMDm.CPHA bit can be set to either 0 or 1. For clock synchronous operation in slave mode (MSTR = 0), always set the CPHA bit to 1. Do not perform operations if the CPHA bit is set to 0 for clock synchronous operation in slave mode (MSTR = 0).

TXMD bit (Communications Operating Mode Select)

The TXMD bit selects full-duplex synchronous serial communications or transmit-only operations. When this bit is set to 1, the SPI only performs transmit operations and not receive operations (see section 31.3.6. Data Transfer Modes), and receive buffer full interrupt requests cannot be used.

TXMD setting is invalid in receive only slave mode.

MODFEN bit (Mode Fault Error Detection Enable)

The MODFEN bit enables or disables the detection of mode fault errors (see section 31.3.10. Error Detection). In addition, the SPI determines the I/O direction of the SSLni pins based on combination of the MODFEN and MSTR bits (see section 31.3.2. Controlling the SPI Pins).

MSTR bit (SPI Master/Slave Mode Select)

The MSTR bit selects master or slave mode for the SPI. Based on the MSTR bit settings, the SPI determines the direction of the RSPCKn, MOSIn, MISOn, and SSLni pins.

SPEIE bit (SPI Error Interrupt Enable)

The SPEIE bit enables or disables the generation of SPI error interrupt requests when one of the following occurs:

- The SPI detects a mode fault error or underrun error and sets the SPSR.MODF flag to 1
- The SPI detects an overrun error and sets the SPSR.OVRF flag to 1
- The SPI detects a parity error and sets the SPSR.PERF flag to 1

For details, see section 31.3.10. Error Detection.

SPTIE bit (Transmit Buffer Empty Interrupt Enable)

The SPTIE bit enables or disables the generation of transmit buffer empty interrupt requests when the SPI detects that the transmit buffer is empty. To generate a transmit buffer empty interrupt request when transmission starts, set the SPE and SPTIE bits to 1 at the same time or set the SPE bit to 1 after setting the SPTIE bit to 1.

When the SPTIE bit is 1, transmit buffer interrupts are generated even when the SPI function is disabled (when the SPE bit is changed to 0).

SPE bit (SPI Function Enable)

The SPE bit enables or disables the SPI function. The SPE bit cannot be set to 1 when the SPSR.MODF flag is 1. For details, see section 31.3.10. Error Detection.

Setting the SPE bit to 0 disables the SPI function and initializes a part of the module function. For details, see section 31.3.11. Initializing the SPI. In addition, a transmit buffer empty interrupt request is generated when the SPE bit is changed from 0 to 1 or from 1 to 0.

SPRIE bit (SPI Receive Buffer Full Interrupt Enable)

The SPRIE bit enables or disables the generation of an SPI receive buffer full interrupt request when the SPI detects a receive buffer full write after completion of a serial transfer.

31.2.2 SSLP : SPI Slave Select Polarity Register

Base address: SPIn = 0x4011_A000 + 0x0100 × n (n = 0 to 2)

Offset address: 0x01

Bit position:	7	6	5	4	3	2	1	0
Bit field:	—	—	—	—	SSL3P	SSL2P	SSL1P	SSL0P
Value after reset:	0	0	0	0	0	0	0	0

Bit	Symbol	Function	R/W
0	SSL0P	SSLn0 Signal Polarity Setting 0: Set SSLn0 signal to active-low 1: Set SSLn0 signal to active-high	R/W
1	SSL1P	SSLn1 Signal Polarity Setting 0: Set SSLn1 signal to active-low 1: Set SSLn1 signal to active-high	R/W
2	SSL2P	SSLn2 Signal Polarity Setting 0: Set SSLn2 signal to active-low 1: Set SSLn2 signal to active-high	R/W
3	SSL3P	SSLn3 Signal Polarity Setting 0: Set SSLn3 signal to active-low 1: Set SSLn3 signal to active-high	R/W
7:4	—	These bits are read as 0. The write value should be 0.	R/W

31.2.3 SPPCR : SPI Pin Control Register

Base address: SPIn = 0x4011_A000 + 0x0100 × n (n = 0 to 2)

Offset address: 0x02

Bit position:	7	6	5	4	3	2	1	0
Bit field:	—	—	MOIFE	MOIFV	—	—	SPLP2	SPLP
Value after reset:	0	0	0	0	0	0	0	0

Bit	Symbol	Function	R/W
0	SPLP	SPI Loopback 0: Normal mode 1: Loopback mode (receive data = inverted transmit data)	R/W
1	SPLP2	SPI Loopback 2 0: Normal mode 1: Loopback mode (receive data = transmit data)	R/W
3:2	—	These bits are read as 0. The write value should be 0.	R/W
4	MOIFV	MOSI Idle Fixed Value 0: Set level output on MOSIn pin during MOSI idling to low 1: Set level output on MOSIn pin during MOSI idling to high	R/W
5	MOIFE	MOSI Idle Value Fixing Enable 0: Set MOSI output value to equal final data from previous transfer 1: Set MOSI output value to equal value set in the MOIFV bit	R/W
7:6	—	These bits are read as 0. The write value should be 0.	R/W

SPLP bit (SPI Loopback)

The SPLP bit selects the mode of the SPI pins. When this bit is set to 1, the SPI shuts off the path between the MISOn pin and the shift register if the SPCR.MSTR bit is 1, and between the MOSIn pin and the shift register if the SPCR.MSTR bit is 0. The SPI then inverts the value of the input path for the shift register and connects it to the output path (loopback mode). For more information, see section 31.3.14. Loopback Mode.

SPLP2 bit (SPI Loopback 2)

The SPLP2 bit selects the mode of the SPI pins. When this bit is set to 1, the SPI shuts off the path between the MISOn pin and the shift register if the SPCR.MSTR bit is 1, and between the MOSIn pin and the shift register if the SPCR.MSTR bit is 0. The SPI then connects the value of the input path for the shift register to the output path (loopback mode) without inverting the value. For more information, see section 31.3.14. Loopback Mode.

MOIFV bit (MOSI Idle Fixed Value)

The MOIFV bit determines the MOSIn pin output value during the SSL negation period (including the SSL retention period during a burst transfer) when the MOIFE bit is 1 in master mode.

MOIFE bit (MOSI Idle Value Fixing Enable)

The MOIFE bit fixes the MOSIn output value when the SPI is in master mode and in an SSL negation period (including the SSL retention period during a burst transfer).When the MOIFE bit is 0, the SPI outputs the last data from the previous serial transfer during the SSL negation period to the MOSIn pin. When the MOIFE bit is 1, the SPI outputs the fixed value set in the MOIFV bit to the MOSIn pin.

31.2.4 SPSR : SPI Status Register

Base address: SPIn = 0x4011_A000 + 0x0100 × n (n = 0 to 2)

Offset address: 0x03

Bit position:	7	6	5	4	3	2	1	0
Bit field:	SPRF	CENDF	SPTEF	UDRF	PERF	MODF	IDLNF	OVRF
Value after reset:	0	0	1	0	0	0	0	0

Bit	Symbol	Function	R/W
0	OVRF	Overrun Error Flag 0: No overrun error occurred 1: Overrun error occurred	R/W*1
1	IDLNF	SPI Idle Flag 0: SPI is in the idle state 1: SPI is in the transfer state	R
2	MODF	Mode Fault Error Flag 0: No mode fault or underrun error occurred 1: Mode fault error or underrun error occurred	R/W*1
3	PERF	Parity Error Flag 0: No parity error occurred 1: Parity error occurred	R/W*1
4	UDRF	Underrun Error Flag The UDRF bit is valid when MODF flag is 1. 0: Mode fault error occurred (MODF = 1) 1: Underrun error occurred (MODF = 1)	R/W*1 *2
5	SPTEF	SPI Transmit Buffer Empty Flag 0: Data is in the transmit buffer 1: No data is in the transmit buffer	R/W*3
6	CENDF	Communication End Flag 0: Not communicating or communicating 1: Communication completed	R/W*1

Bit	Symbol	Function	R/W
7	SPRF	SPI Receive Buffer Full Flag 0: No valid data is in SPDR/SPDR_HA 1: Valid data is in SPDR/SPDR_HA	R/W*3

Note 1. Only 0 can be written to clear the flag after reading 1.
Note 2. Clear the UDRF flag at the same time as the MODF flag.
Note 3. The write value should be 1.

OVRF flag (Overrun Error Flag)

The OVRF flag indicates the occurrence of an overrun error. In master mode (SPCR.MSTR bit = 1) and when the RSPCK clock auto-stop function is enabled (SPCR1.SCKASE bit = 1), overrun errors do not occur. This flag does not set to 1. For details, see section 31.3.10.1. Overrun errors.

[Setting condition]

When the next serial transfer ends and the receive buffer is full, and satisfy one of following.

- The SPCR.TXMD bit = 0. (transmit-receive master mode or transmit-receive slave mode or receive only slave mode)
- The SPCR.MSTR bit = 0, and the SPCR3.ETXMD bit = 1. (receive only slave mode)

[Clearing condition]

- When 0 is written to the OVRF flag after the OVRF flag is confirmed to be 1 by a read of SPSR.

IDLNF flag (SPI Idle Flag)

The IDLNF flag indicates the transfer status of the SPI.

[Setting conditions]

Master mode

- When none of the conditions in the master mode [Clearing condition] is met.

Slave mode

- When the SPE bit in SPCR is 1, enabling the SPI function.

[Clearing conditions]

Master mode

When condition 1 or all other conditions are satisfied.

Condition 1: The SPE bit in SPCR is 0, indicating that the SPI is initialized.

Condition 2: The transmit buffer (SPTX) is empty, indicating that data for the next transfer is not set.

Condition 3: The SPI internal sequencer is in the idle state, indicating that operation up to next-access delay is complete.

Condition 4: The SPCP[2:0] bits in SPSSR are 000 (at the beginning of sequence control)

Slave mode

- When condition 1 is satisfied.

MODF flag (Mode Fault Error Flag)

The MODF flag indicates the occurrence of a mode fault error or an underrun error. The UDRF flag indicates which error occurred.

[Setting conditions]

Multi-master mode

- When the input level of the SSLni pin changes to the active level while the SPCR.MSTR bit is 1 (master mode) and the SPCR.MODFEN bit is 1 (mode fault error detection is enabled), triggering a mode fault error.

Slave mode

- When condition 1 or 2 is satisfied.

Condition 1: The SSLni pin is negated before the RSPCK cycle required for data transfer ends while the SPCR.MSTR bit is 0 (slave mode) and the SPCR.MODFEN bit is 1 (mode fault error detection is enabled), triggering a mode fault error.

Condition 2: The serial transfer begins with the SPCR.MSTR bit is set to 0 (slave mode), the SPCR.SPE bit is set to 1, and the transmission data not prepared, triggering an underrun error.

The active level of the SSLni signal is determined by the SSLP.SSLiP bit (SSLi signal polarity setting).

[Clearing condition]

- When SPSR is read while this flag is 1, and then 0 is written to this flag.

PERF flag (Parity Error Flag)

The PERF flag indicates the occurrence of a parity error.

[Setting condition]

When a serial transfer ends while the SPCR2.SPPE bit is 1, triggering a parity error, and satisfy one of following.

- The SPCR.TXMD bit = 0. (transmit-receive master mode or transmit-receive slave mode or receive only slave mode)
- The SPCR.MSTR bit = 0, and the SPCR3.ETXMD bit = 1. (receive only slave mode)

[Clearing condition]

- When SPSR is read while this flag is 1, and then 0 is written to this flag.

UDRF flag (Underrun Error Flag)

The UDRF flag indicates the occurrence of an underrun error.

[Setting condition]

- When the serial transfer begins with the SPCR.MSTR bit is set to 0 (slave mode), the SPCR3.ETXMD bit = 0 (transmit-receive slave mode or transmit slave mode) the SPCR.SPE bit is set to 1, and the transmission data not prepared, triggering an underrun error.

[Clearing condition]

- When SPSR is read while this flag is 1, and then 0 is written to this flag.

SPTEF flag (SPI Transmit Buffer Empty Flag)

The SPTEF flag indicates the status of the transmit buffer for the SPI Data Register (SPDR/SPDR_HA).

[Setting conditions]

- When condition 1. or 2. is satisfied.
  1. The SPCR.SPE bit is 0, indicating that the SPI is initialized.
  2. Transmit data (the frame size specified by the SPDCR.SPFC[1:0]) is transferred from the transmit buffer to the shift register.

[Clearing condition]

- When data written to SPDR/SPDR_HA/SPDR_BY equals the number of frames set in the SPFC[1:0] bits in the SPI Data Control Register (SPDCR).

Data can only be written to SPDR/SPDR_HA/SPDR_BY when the SPTEF flag is 1. If data is written to the transmit buffer of SPDR/SPDR_HA when the SPTEF flag is 0, data in the transmit buffer is not updated.

CENDF flag (Communication End Flag)

This flag indicates communication end status of SPI. It turns 1 at communication end, and turns 0 at starting next communication.

[Setting condition]

Mastar mode

The following 3 conditions are met.

- The transmit buffer(SPTX) is empty. (There is no next transmission data.)
- The SPSSR.SPCP[2:0] are 000b. (It means the head of the sequential control.)
- The state of SPI internal sequencer transferred to the idle state. (It means the next access delay has been completed.)

Transmit-receive / transmit only slave mode in SPI serial communication (4-wire: the SPCR.SPMS bit is 0)

The following 3 conditions are met.

- The transmit buffer(SPTX) is empty. (There is no next transmission data.)
- The transmission shift register is empty. (It means SPI does not do serial transfer.)
- SSL0 was negated.

Transmit-receive / transmit only slave mode in clock synchronous (3-wire: the SPCR.SPMS bit is 1)

The following 3 conditions are met.

- The transmit buffer(SPTX) is empty. (There is no next transmission data.)
- The transmission shift register is empty. (It means SPI does not do serial transfer.)
- The last even edge of RSPCK of the last data was detected. (When the SPCMD.CPHA bit is “1”.)

Receive only slave mode in SPI serial communication (4-wire: the SPCR.SPMS bit is 0)

The following condition is met.

- SSL0 was negated after the last data was written in the received buffer.

Receive only slave mode in clock synchronous (3-wire: the SPCR.SPMS bit is 1)

The following condition is met.

- The last even edge of RSPCK of the last data was detected. (When the SPCMD.CPHA bit is 1.)

[Clearing condition]

Master mode

Satisfy one of following.

- The next transmit data was written to the transmit buffer (SPTX).
- The CENDF flag was written 0 after reading the SPSR when the CENDF flag was 1

Transmit-receive / transmit only slave mode

Satisfy one of following.

- The next transmit data was written to the transmit buffer(SPTX).
- The CENDF flag was written 0 after reading the SPSR when the CENDF flag was 1.

Receive only slave mode in SPI serial communication (4-wire: the SPCR.SPMS bit is 0)

Satisfy one of following.

- SSL0 assertion of next data was detected.
- The CENDF flag was written 0 after reading the SPSR when the CENDF flag was 1.

Receive only slave mode in clock synchronous (3-wire: the SPCR.SPMS bit is 1)

Satisfy one of following.

- The first edge of RSPCK of the next data was detected.
- The CENDF flag was written 0 after reading the SPSR when the CENDF flag was 1.

SPRF flag (SPI Receive Buffer Full Flag)

The SPRF flag indicates the status of the receive buffer for the SPI Data Register (SPDR/SPDR_HA).

[Setting condition]

- Received data with the frame size specified by the SPDCR.SPFC[1:0] bits have been transferred to the SPDR from the shift register while the SPRF flag is 0. And satisfy one of following. However, the SPRF flag does not change from 0 to 1 while the OVRF flag = 1.
  - The SPCR.TXMD bit is 0 (transmit-receive master mode, transmit-receive slave mode, or receive only slave mode)
  - The SPCR.MSTR bit is 0 and the SPCR3.ETXMD bit is 1 (receive only slave mode)

[Clearing condition]

- When received data is read from the SPDR/SPDR_HA.

31.2.5 SPDR/SPDR_HA/SPDR_BY : SPI Data Register

Base address: SPIn = 0x4011_A000 + 0x0100 × n (n = 0 to 2)

Offset address: 0x04

Bit position:	31																															0
Bit field:																																
Value after reset:	0	0	0	0	0	0	0	0	0	0	0	0	0	0	0	0	0	0	0	0	0	0	0	0	0	0	0	0	0	0	0	0

Bit	Symbol	Function	R/W
31:0	n/a	SPI Data	R/W

SPDR/SPDR_HA/SPDR_BY is the interface with the buffers that hold data for transmission and reception by the SPI. When accessing this register in words (the SPDCR.SPLW bit is 1), access SPDR. When accessing it in halfwords (the SPLW bit is 0), access SPDR_HA. When accessing it in byte (the SPDCR.SPBYT bit is 1), access SPDR_BY.

The transmit buffer (SPTX) and receive buffer (SPRX) are independent but are both mapped to SPDR/SPDR_HA. Figure 31.2 shows the configuration of the SPDR/SPDR_HA register.

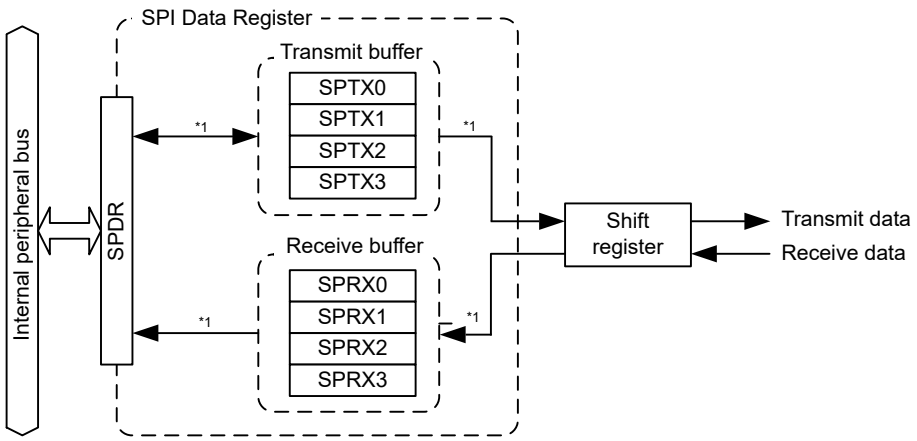

Note: SPDR = SPDR/SPDR_HA/SPDR_BY
Note 1. The destination buffer and stage for access is automatically switched by the hardware.

Figure 31.2 Configuration of SPDR/SPDR_HA/SPDR_BY

The transmit and receive buffers each have four stages. The eight stages of the buffer are all mapped to the single address of SPDR/SPDR_HA/SPDR_BY.

Data written to SPDR/SPDR_HA/SPDR_BY is written to a transmit-buffer stage (SPTXn) (n = 0 to 3), and then transmitted from the buffer. The receive buffer holds received data on completion of reception. The receive buffer is not updated if an overrun is generated.

Additionally, if the data length is not 32 bits, bits not referred to in SPTXn (n = 0 to 3) are stored in the associated bits in SPRXn (n = 0 to 3). For example, if the data length is 9 bits, the received data is stored in the SPRXn[8:0] bits, and the SPTXn[31:9] bits are stored in the SPRXn[31:9] bits.

(1) Bus interface

SPDR/SPDR_HA/SPDR_BY is an interface with 32-bit wide transmit and receive buffers, each of which has one stages, for a total of 32 bytes. The 32 bytes are mapped to the 4-byte address space for SPDR/SPDR_HA/SPDR_BY. Additionally, the unit of access for SPDR/SPDR_HA/SPDR_BY is selected by the SPI Word Access/Halfword Access Specification bit in the SPI Data Control Register (SPDCR.SPLW). SPDR can also be accessed with the access size specified by the SPI Byte Access bit in the SPI Data Control Register (SPDCR.SPBYT).

Flush the transmission data at the LSB end of the register, and store the received data at the LSB end.

The following sections describe the operations involved in writing to and reading from SPDR/SPDR_HA/SPDR_BY.

Writing

Data written to SPDR/SPDR_HA/SPDR_BY is written to a transmit buffer (SPTXn). This is not affected by the value of the SPDCR.SPRDTD bit, unlike when reading from SPDR/SPDR_HA/SPDR_BY. The transmit buffer includes a transmit buffer write pointer that is automatically updated to reference the next stage each time data is written to SPDR/SPDR_HA/SPDR_BY.

Figure 31.3 shows the configuration of the bus interface with the transmit buffer when writing to SPDR/SPDR_HA/SPDR_BY.

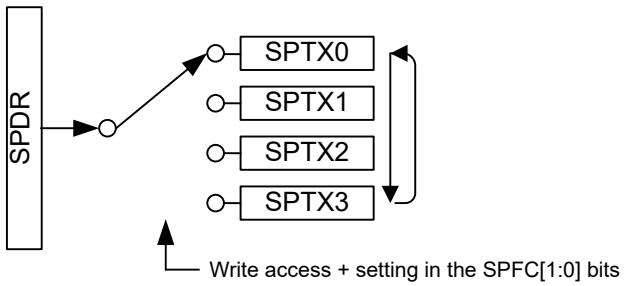

Note: SPDR = SPDR/SPDR_HA/SPDR_BY

Figure 31.3 Configuration of SPDR/SPDR_HA/SPDR_BY for write access

The sequence for switching the transmit buffer write pointer differs with the setting of the number of frames specification bits in the SPI Data Control Register (SPDCR.SPFC[1:0]). The relationship of the SPFC[1:0] setting and the sequence of pointer switching from SPTX0 to SPTX3 is as follows:

- When SPFC[1:0] = 00b: SPTX0 → SPTX0 → SPTX0 → …
- When SPFC[1:0] = 01b: SPTX0 → SPTX1 → SPTX0 → SPTX1 → …
- When SPFC[1:0] = 10b: SPTX0 → SPTX1 → SPTX2 → SPTX0 → SPTX1 → …
- When SPFC[1:0] = 11b: SPTX0 → SPTX1 → SPTX2 → SPTX3 → SPTX0 → SPTX1 → …

When 1 is written to the SPI Function Enable bit in the SPI Control Register (SPCR.SPE) while the bit is 0, SPTX0 is the destination for the next write.

When writing to the transmit buffer (SPTXn) after generating the transmit buffer empty interrupt (when SPSR.SPTEF is 1), write the number of frames set in SPFC[1:0] in the SPI Data Control Register (SPDCR). Even when the specified number of frames is written to the transmit buffer (SPTXn), the value of the buffer is not updated after completion of the writing and before generation of the next transmit buffer empty interrupt (when SPTEF is 0).

Reading

SPDR/SPDR_HA/SPDR_BY can be accessed to read the value of a receive buffer (SPRXn) or a transmit buffer (SPTXn). The setting in the SPI Receive/Transmit Data Select bit in the SPI Data Control Register (SPDCR.SPRDTD) selects whether reading is of the receive or transmit buffer. The sequence of reading the SPDR/SPDR_HA/SPDR_BY register is controlled by the independent receive buffer and transmit buffer read pointers.

Figure 31.4 shows the configuration of the bus interface with the receive and transmit buffers for reading from SPDR/SPDR_HA/SPDR_BY.

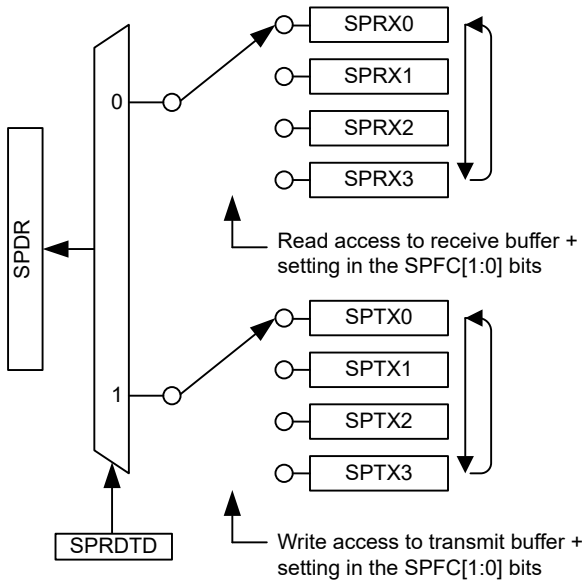

Note: SPDR = SPDR/SPDR_HA/SPDR_BY

Figure 31.4 Configuration of SPDR/SPDR_HA/SPDR_BY for read access

Reading the receive buffer switches the receive buffer read pointer to the next buffer automatically. The switching sequence for the receive buffer read pointer is the same as that for the transmit buffer write pointer. However, when 1 is written to the SPI Function Enable bit in the SPI Control Register (SPCR.SPE) while the value of the bit is 1, SPRX0 is referenced by the buffer read pointer for the next read.

The transmit buffer read pointer is updated when writing to SPDR/SPDR_HA/SPDR_BY, but not updated when reading from the transmit buffer. When reading from the transmit buffer, the value most recently written to SPDR/SPDR_HA/SPDR_BY is read.

After a transmit buffer empty interrupt is generated, reading from the transmit buffer returns all 0s after the completion of writing the number of frames of data specified in the SPDCR.SPFC[1:0] bits, until the next buffer empty interrupt is generated (when SPTEF is 0).

31.2.6 SPSCR : SPI Sequence Control Register

Base address: SPIn = 0x4011_A000 + 0x0100 × n (n = 0 to 2)

Offset address: 0x08

Bit position:	7	6	5	4	3	2	1	0
Bit field:	—	—	—	—	—	SPSLN[2:0]		
Value after reset:	0	0	0	0	0	0	0	0

Bit	Symbol	Function	R/W
2:0	SPSLN[2:0]	SPI Sequence Length Specification The sequence length that is set in these bits determines the order in which the SPCMD0 to SPCMD07 registers are referenced. The setting defines the relationship between the sequence length and the SPCMD0 to SPCMD7 registers referenced by the SPI. In slave mode, the SPI references SPCMD0. 0 0 0: Sequence Length is 1 (Referenced SPCMDn, n = 0→0→…) 0 0 1: Sequence Length is 2 (Referenced SPCMDn, n = 0→1→0→…) 0 1 0: Sequence Length is 3 (Referenced SPCMDn, n = 0→1→2→0→…) 0 1 1: Sequence Length is 4 (Referenced SPCMDn, n = 0→1→2→3→0→…) 1 0 0: Sequence Length is 5 (Referenced SPCMDn, n = 0→1→2→3→4→0→…) 1 0 1: Sequence Length is 6 (Referenced SPCMDn, n = 0→1→2→3→4→5→0→…) 1 1 0: Sequence Length is 7 (Referenced SPCMDn, n = 0→1→2→3→4→5→6→0→…) 1 1 1: Sequence Length is 8 (Referenced SPCMDn, n = 0→1→2→3→4→5→6→7→0→…)	R/W
7:3	—	These bits are read as 0. The write value should be 0.	R/W

SPSCR specifies the sequence length when the SPI operates in master mode. Before changing the SPSLN[2:0] bits while both the SPCR.MSTR and SPCR.SPE bits are 1, check that the SPSR.IDLNF flag is 0.

SPSLN[2:0] bits (SPI Sequence Length Specification)

The SPSLN[2:0] bits specify the sequence length when the SPI in master mode performs sequential operations. The SPI in master mode changes the SPCMD0 to SPCMD7 registers to be referenced, and the order in which they are referenced is based on this sequence length setting. In slave mode, SPCMD0 is referenced.

31.2.7 SPSSR : SPI Sequence Status Register

Base address: SPIn = 0x4011_A000 + 0x0100 × n (n = 0 to 2)

Offset address: 0x09

Bit position:	7	6	5	4	3	2	1	0
Bit field:	—	SPECM[2:0]			—	SPCP[2:0]		
Value after reset:	0	0	0	0	0	0	0	0

Bit	Symbol	Function	R/W
2:0	SPCP[2:0]	SPI Command Pointer 0 0 0: SPCMD0 0 0 1: SPCMD1 0 1 0: SPCMD2 0 1 1: SPCMD3 1 0 0: SPCMD4 1 0 1: SPCMD5 1 1 0: SPCMD6 1 1 1: SPCMD7	R
3	—	This bit is read as 0.	R
6:4	SPECM[2:0]	SPI Error Command 0 0 0: SPCMD0 0 0 1: SPCMD1 0 1 0: SPCMD2 0 1 1: SPCMD3 1 0 0: SPCMD4 1 0 1: SPCMD5 1 1 0: SPCMD6 1 1 1: SPCMD7	R
7	—	This bit is read as 0.	R

SPSSR indicates the sequence control status when the SPI operates in master mode. Any writes to SPSSR are ignored.

SPCP[2:0] bits (SPI Command Pointer)

The SPCP[2:0] bits indicate the SPCMDm register that is referenced to by the pointer during sequence control by the SPI. For the SPI sequence control, see section 31.3.12.1. Master mode operation.

SPECM[2:0] bits (SPI Error Command)

The SPECM[2:0] bits indicate the SPCMDm register that is specified in the SPCP[2:0] bits when an error is detected during sequence control by the SPI. The SPI updates the SPECM[2:0] bits only when an error is detected. If both the SPSR.OVRF and SPSR.MODF flags are 0 and there is no error, the values of the SPECM[2:0] bits have no meaning.

For the SPI error detection function, see section 31.3.10. Error Detection. For the SPI sequence control, see section 31.3.12.1. Master mode operation.

31.2.8 SPBR : SPI Bit Rate Register

Base address: SPIn = 0x4011_A000 + 0x0100 × n (n = 0 to 2)

Offset address: 0x0A

Bit position:	7	6	5	4	3	2	1	0
Bit field:								
Value after reset:	1	1	1	1	1	1	1	1

Bit	Symbol	Function	R/W
7:0	n/a	Bit rate	R/W

SPBR sets the bit rate in master mode.

When the SPI is in slave mode, the bit rate depends on the bit rate of the input clock, regardless of the settings in SPBR and the SPCMDm.BRDV[1:0] bits (bit rate division setting). Use bit rates that satisfy the electrical characteristics of the device.

The bit rate is determined by combinations of the SPBR and SPCMDm.BRDV[1:0] settings in the SPI Command Register. The equation for calculating the bit rate is given as follows:

$$\text{Bit rate} = \frac{f(\text{PCLK})}{2 \times (n+1) \times 2^N}$$

(PCLK = PCLKA)

In the equation, n denotes an SPBR setting (0, 1, 2, …, 255), and N denotes a BRDV[1:0] setting (0, 1, 2, 3).

Table 31.3 lists examples of the relationship between the SPBR settings, the BRDV[1:0] settings, and bit rates.

Table 31.3 Relationship between SPBR settings, BRDV[1:0] settings, and bit rates

SPBR(n)	BRDV[1:0] bits (N)	Division ratio	Bit rate PCLKA = 32 MHz
0	0	2	16.0 Mbps
1	0	4	8.00 Mbps
2	0	6	5.33 Mbps
3	0	8	4.00 Mbps
4	0	10	3.20 Mbps
5	0	12	2.67 Mbps
5	1	24	1.33 Mbps
5	2	48	667 kbps
5	3	96	333 kbps
255	3	4096	7.81 kbps

31.2.9 SPDCR : SPI Data Control Register

Base address: SPIn = 0x4011_A000 + 0x0100 × n (n = 0 to 2)

Offset address: 0x0B

Bit position:	7	6	5	4	3	2	1	0
Bit field:	—	SPBYT	SPLW	SPRDTD	—	—	SPFC[1:0]	
Value after reset:	0	0	0	0	0	0	0	0

Bit	Symbol	Function	R/W
1:0	SPFC[1:0]	Number of Frames Specification 0 0: 1 frame 0 1: 2 frames 1 0: 3 frames 1 1: 4 frames	R/W
3:2	—	These bits are read as 0. The write value should be 0.	R/W
4	SPRDTD	SPI Receive/Transmit Data Select 0: Read SPDR/SPDR_HA values from receive buffer 1: Read SPDR/SPDR_HA values from transmit buffer, but only if the transmit buffer is empty	R/W
5	SPLW	SPI Word Access/Halfword Access Specification 0: Set SPDR_HA to valid for halfword access 1: Set SPDR to valid for word access	R/W
6	SPBYT	SPI Byte Access Specification 0: SPDR/SPDR_HA is accessed in halfword or word (SPLW is valid) 1: SPDR_BY is accessed in byte (SPLW is invalid)	R/W
7	—	This bit is read as 0. The write value should be 0.	R/W

The SPI Data Control Register (SPDCR) is used to read the number of frames that can be stored in the SPDR register, read the SPDR register, and to set the access width for the SPDR register to word access, halfword access, or byte access. Up to four frames can be transmitted or received in one round of transmission or reception. The amount of data in each transfer is controlled by the combination of the SPCMDm.SPB[3:0] bits, the SPSCR.SPSLN[2:0] bits, and the SPFC[1:0] bits.

When changing the SPFC[1:0] bits while the SPCR.SPE bit is 1, check that the SPSR.IDLNF flag is 0.

SPFC[1:0] bits (Number of Frames Specification)

The SPFC[1:0] bits specify the number of frames that can be stored in SPDR/SPDR_HA per transfer activation. Up to four frames can be transmitted or received in one round of transmission or reception.

When the number of transmission data frames specified in the SPFC[1:0] bits is written to the SPDR/SPDR_HA register, SPI clears the SPSR.SPTEF flag to 0 and begins transmitting. After that, when the number of transmission data frames specified in the SPFC[1:0] bits is transmitted to the shift register, the SPI generates the transmit buffer empty interrupt (SPSR.SPTEF sets to 1).

When the number of data frames specified in the SPFC[1:0] bits is received, the SPI generates the receive buffer full interrupt (SPSR.SPRF sets to 1).

Table 31.4 Settable combinations of the SPSLN[2:0] and SPFC[1:0] bits (1 of 2)

Setting	SPSLN[2:0]	SPFC[1:0]	Number of frames in a single sequence	Number of frames at which transmission or receive buffer is filled
1-1	000b	00b	1	1
1-2	000b	01b	2	2
1-3	000b	10b	3	3
1-4	000b	11b	4	4
2-1	001b	01b	2	2

Table 31.4 Settable combinations of the SPSLN[2:0] and SPFC[1:0] bits (2 of 2)

Setting	SPSLN[2:0]	SPFC[1:0]	Number of frames in a single sequence	Number of frames at which transmission or receive buffer is filled
2-2	001b	11b	4	4
3	010b	10b	3	3
4	011b	11b	4	4
5	100b	00b	5	1
6	101b	00b	6	1
7	110b	00b	7	1
8	111b	00b	8	1

SPRDTD bit (SPI Receive/Transmit Data Select)

The SPRDTD bit selects whether the SPDR/SPDR_HA reads values from the receive buffer or from the transmit buffer. If reading is from the transmit buffer, the last value written to SPDR/SPDR_HA register is read. Read the transmit buffer after an SPI transmit buffer empty interrupt is generated until data of frames specified by SPFC[1:0] has been written (while the SPSR.SPTEF flag is 1).

For details, see section 31.2.5. SPDR/SPDR_HA/SPDR_BY : SPI Data Register.

SPLW bit (SPI Word Access/Halfword Access Specification)

The SPLW bit specifies the access width for SPDR. Access to SPDR_HA in halfwords is valid when the SPLW bit is 0 and access to SPDR in words is valid when the SPLW bit is 1. Also, when this bit is 0, set the SPI data length setting bits, SPCMDm.SPB[3:0], from 8 to 16 bits. Do not perform any operations when a data length of 20, 24, or 32 bits is specified.

SPBYT bit (SPI Byte Access Specification)

The SPBYT bit is used to set the data width of access to the SPI Data Register (SPDR). When SPBYT = 0, use word or half word access to SPDR/SPDR_HA. When SPBYT = 1 (in that case, SPLW is invalid), use byte access to SPDR_BY.

When SPBYT = 1, set the SPI data length bits (SPB[3:0]) in the SPI Command Register m (SPCMDm) to 8 bits. If SPB[3:0] are set to 9 to 16, 20, 24, or 32 bit, subsequent operation is not guaranteed.

31.2.10 SPCKD : SPI Clock Delay Register

Base address: SPIn = 0x4011_A000 + 0x0100 × n (n = 0 to 2)

Offset address: 0x0C

Bit position:	7	6	5	4	3	2	1	0
Bit field:	—	—	—	—	—	SCKDL[2:0]		
Value after reset:	0	0	0	0	0	0	0	0

Bit	Symbol	Function	R/W
2:0	SCKDL[2:0]	RSPCK Delay Setting 0 0 0: 1 RSPCK 0 0 1: 2 RSPCK 0 1 0: 3 RSPCK 0 1 1: 4 RSPCK 1 0 0: 5 RSPCK 1 0 1: 6 RSPCK 1 1 0: 7 RSPCK 1 1 1: 8 RSPCK	R/W
7:3	—	These bits are read as 0. The write value should be 0.	R/W

SPCKD specifies the RSPCK delay, the period from the beginning of SSLni signal assertion to RSPCK oscillation, when the SPCMDm.SCKDEN bit is 1.

SCKDL[2:0] bits (RSPCK Delay Setting)

The SCKDL[2:0] bits specify an RSPCK delay value when the SPCMDm.SCKDEN bit is 1. When using the SPI in slave mode, set the SCKDL[2:0] bits to 000b.

31.2.11 SSLND : SPI Slave Select Negation Delay Register

Base address: SPIn = 0x4011_A000 + 0x0100 × n (n = 0 to 2)

Offset address: 0x0D

Bit position:	7	6	5	4	3	2	1	0
Bit field:	—	—	—	—	—	SLNDL[2:0]		
Value after reset:	0	0	0	0	0	0	0	0

Bit	Symbol	Function	R/W
2:0	SLNDL[2:0]	SSL Negation Delay Setting 0 0 0: 1 RSPCK 0 0 1: 2 RSPCK 0 1 0: 3 RSPCK 0 1 1: 4 RSPCK 1 0 0: 5 RSPCK 1 0 1: 6 RSPCK 1 1 0: 7 RSPCK 1 1 1: 8 RSPCK	R/W
7:3	—	These bits are read as 0. The write value should be 0.	R/W

SSLND specifies the SSL negation delay, the period from the transmission of a final RSPCK edge to the negation of the SSLni signal during a serial transfer by the SPI in master mode. If the contents of SSLND are changed while both the SPCR.MSTR and SPCR.SPE bits are 1, do not perform subsequent operations.

SLNDL[2:0] bits (SSL Negation Delay Setting)

The SLNDL[2:0] bits specify an SSL negation delay value when the SLNDEN bit in SPCMDn is 1 and the SPI is in master mode. When using the SPI in slave mode, set the SLNDL[2:0] bits to 000b.

31.2.12 SPND : SPI Next-Access Delay Register

Base address: SPIn = 0x4011_A000 + 0x0100 × n (n = 0 to 2)

Offset address: 0x0E

Bit position:	7	6	5	4	3	2	1	0
Bit field:	—	—	—	—	—	SPNDL[2:0]		
Value after reset:	0	0	0	0	0	0	0	0

Bit	Symbol	Function	R/W
2:0	SPNDL[2:0]	SPI Next-Access Delay Setting 0 0 0: 1 RSPCK + 2 PCLKA 0 0 1: 2 RSPCK + 2 PCLKA 0 1 0: 3 RSPCK + 2 PCLKA 0 1 1: 4 RSPCK + 2 PCLKA 1 0 0: 5 RSPCK + 2 PCLKA 1 0 1: 6 RSPCK + 2 PCLKA 1 1 0: 7 RSPCK + 2 PCLKA 1 1 1: 8 RSPCK + 2 PCLKA	R/W
7:3	—	These bits are read as 0. The write value should be 0.	R/W

SPND specifies the next-access delay, the non-active period of the SSLni signal after termination of a serial transfer, when the SPCMDm.SPNDEN bit is 1.

SPNDL[2:0] bits (SPI Next-Access Delay Setting)

The SPNDL[2:0] bits specify a next-access delay when the SPCMDm.SPNDEN bit is 1. When using the SPI in slave mode, set the SPNDL[2:0] bits to 000b.

31.2.13 SPCR2 : SPI Control Register 2

Base address: SPIn = 0x4011_A000 + 0x0100 × n (n = 0 to 2)

Offset address: 0x0F

Bit position:	7	6	5	4	3	2	1	0
Bit field:	—	—	—	SCKASE	PTE	SPIIE	SPOE	SPPE
Value after reset:	0	0	0	0	0	0	0	0

Bit	Symbol	Function	R/W
0	SPPE	Parity Enable 0: Do not add parity bit to transmit data and do not check parity bit of receive data 1: When SPCR.TXMD = 0: Add parity bit to transmit data and check parity bit of receive data When SPCR.TXMD = 1: Add parity bit to transmit data but do not check parity bit of receive data	R/W
1	SPOE	Parity Mode 0: Select even parity for transmission and reception 1: Select odd parity for transmission and reception	R/W
2	SPIIE	SPI Idle Interrupt Enable 0: Disable idle interrupt requests 1: Enable idle interrupt requests	R/W
3	PTE	Parity Self-Testing 0: Disable self-diagnosis function of the parity circuit 1: Enable self-diagnosis function of the parity circuit	R/W
4	SCKASE	RSPCK Auto-Stop Function Enable 0: Disable RSPCK auto-stop function 1: Enable RSPCK auto-stop function	R/W
7:5	—	These bits are read as 0. The write value should be 0.	R/W

SPPE bit (Parity Enable)

The SPPE bit enables or disables the parity function.

When the SPCR.TXMD bit is 0 and this bit is 1, the parity bit is added to transmit data and parity checking is performed for receive data.

When the SPCR.TXMD bit is 1 and this bit is 1, the parity bit is added to transmit data but parity checking is not performed for receive data.

SPOE bit (Parity Mode)

The SPOE bit specifies odd or even parity.

When even parity is set, parity bit addition is performed so that the total number of bits whose value is 1 in the transmit or receive character plus the parity bit is even. Similarly, when odd parity is set, parity bit addition is performed so that the total number of bits whose value is 1 in the transmit or receive character plus the parity bit is odd.

The SPOE bit is only valid when the SPPE bit is 1.

SPIIE bit (SPI Idle Interrupt Enable)

The SPIIE bit enables or disables the generation of SPI idle interrupt requests when an idle state is detected in the SPI and the SPSR.IDLNF flag clears is set to 0.

PTE bit (Parity Self-Testing)

The PTE bit enables self-diagnosis of the parity circuit to check whether the parity function is operating correctly.

SCKASE bit (RSPCK Auto-Stop Function Enable)

The SCKASE bit enables or disables the RSPCK auto-stop function. When this function is enabled, the RSPCK clock is stopped before an overrun error occurs, when data is received in master mode. For details, see section 31.3.10.1. Overrun errors.

31.2.14 SPCMDm : SPI Command Register m (m = 0 to 7)

Base address: SPIn = 0x4011_A000 + 0x0100 × n (n = 0 to 2)

Offset address: 0x10 + 0x02 × m

Bit position:	15	14	13	12	11	10	9	8	7	6	5	4	3	2	1	0
Bit field:	SCKDEN	SLNDEN	SPNDEN	LSBF	SPB[3:0]				SSLKP	SSLA[2:0]			BRDV[1:0]		CPOL	CPHA
Value after reset:	0	0	0	0	0	1	1	1	0	0	0	0	1	1	0	1

Bit	Symbol	Function	R/W
0	CPHA	RSPCK Phase Setting 0: Select data sampling on leading edge, data change on trailing edge 1: Select data change on leading edge, data sampling on trailing edge	R/W
1	CPOL	RSPCK Polarity Setting 0: Set RSPCK low during idle 1: Set RSPCK high during idle	R/W
3:2	BRDV[1:0]	Bit Rate Division Setting 0 0: Base bit rate 0 1: Base bit rate divided by 2 1 0: Base bit rate divided by 4 1 1: Base bit rate divided by 8	R/W
6:4	SSLA[2:0]	SSL Signal Assertion Setting 0 0 0: SSL0 0 0 1: SSL1 0 1 0: SSL2 0 1 1: SSL3 Others: Setting prohibited	R/W
7	SSLKP	SSL Signal Level Keeping 0: Negate all SSL signals on completion of transfer 1: Keep SSL signal level from the end of transfer until the beginning of the next access	R/W
11:8	SPB[3:0]	SPI Data Length Setting 0x0: 20 bits 0x1: 24 bits 0x2: 32 bits 0x3: 32 bits 0x8: 9 bits 0x9: 10 bits 0xA: 11 bits 0xB: 12 bits 0xC: 13 bits 0xD: 14 bits 0xE: 15 bits 0xF: 16 bits Others: 8 bits	R/W
12	LSBF	SPI LSB First 0: MSB-first 1: LSB-first	R/W
13	SPNDEN	SPI Next-Access Delay Enable 0: Select next-access delay of 1 RSPCK + 2 PCLKA 1: Select next-access delay equal to the setting in the SPI Next-Access Delay Register (SPND)	R/W

Bit	Symbol	Function	R/W
14	SLNDEN	SSL Negation Delay Setting Enable 0: Select SSL negation delay of 1 RSPCK 1: Select SSL negation delay equal to the setting in the SPI Slave Select Negation Delay Register (SSLND)	R/W
15	SCKDEN	RSPCK Delay Setting Enable 0: Select RSPCK delay of 1 RSPCK 1: Select RSPCK delay equal to the setting in the SPI Clock Delay Register (SPCKD)	R/W

The SPCMDm registers specify the transfer format for the SPI in master mode. Each channel has eight SPCMDm (m = 0 to 7). Some of the bits in the SPCMD0 registers are used to set the transfer mode for the SPI in slave mode. The SPI in master mode sequentially references the SPCMDm registers based on the settings in the SPSCR.SPSLN[2:0] bits and executes the serial transfer that is set in the referenced SPCMDm registers.

Set the SPCMDm registers while the transmit buffer is empty (SPSR.SPTEF is 1 and data for the next transfer is not set) and before the setting of the data to be transmitted when that SPCMDm registers is referenced.

The SPCMDm registers referenced by the SPI in master mode can be checked by means of the SPSSR.SPCP[2:0] bits.

CPHA bit (RSPCK Phase Setting)

The CPHA bit selects the RSPCK phase of the SPI in master or slave mode. Data communications between SPI modules require the same RSPCK phase setting between the modules.

CPOL bit (RSPCK Polarity Setting)

The CPOL bit selects the RSPCK polarity of the SPI in master or slave mode. Data communications between SPI modules require the same RSPCK polarity setting between the modules.

BRDV[1:0] bits (Bit Rate Division Setting)

The BRDV[1:0] bits determine the bit rate in combination with the settings in the SPBR register. (see section 31.2.8. SPBR : SPI Bit Rate Register). The SPBR settings determine the base bit rate. The BRDV[1:0] setting selects the bit rate obtained by dividing the base bit rate by 1, 2, 4, or 8. Different BRDV[1:0] bit settings can be specified in the SPCMD0 register. This enables execution of serial transfers at different bit rates for each command.

SSLA[2:0] bits (SSL Signal Assertion Setting)

The SSLA[2:0] bits control the SSLni signal assertion when the SPI performs serial transfers in master mode. When an SSLni signal is asserted, its polarity is determined by the value set in the associated SSLP. When the SSLA[2:0] bits are set to 000b in multi-master mode, serial transfers are performed with all the SSL signals in the negated state (as the SSLn0 pin acts as input).

When using the SPI in slave mode, set the SSLA[2:0] bits to 000b.

SSLKP bit (SSL Signal Level Keeping)

When the SPI in master mode performs a serial transfer, the SSLKP bit specifies whether the SSLni signal level for the current command is to be kept or negated between the SSL negation associated with the current command and the SSL assertion associated with the next command. Setting the SSLKP bit to 1 enables a burst transfer. For details, see section 31.3.12.1. Master mode operation. When using the SPI in slave mode, set the SSLKP bit to 0.

SPB[3:0] bits (SPI Data Length Setting)

The SPB[3:0] bits specify the transfer data length for the SPI in master or slave mode.

LSBF bit (SPI LSB First)

The LSBF bit specifies the data format of the SPI in master or slave mode to MSB-first or LSB-first.

SPNDEN bit (SPI Next-Access Delay Enable)

The SPNDEN bit specifies the next-access delay, the period from the time the SPI in master mode terminates a serial transfer and sets the SSLni signal inactive until the SPI enables the SSLni signal assertion for the next access. If the SPNDEN bit is 0, the SPI sets the next-access delay to 1 RSPCK + 2 PCLKA. If the SPNDEN bit is 1, the SPI inserts a next-access delay according to the SPND setting.

When using the SPI in slave mode, set the SPNDEN bit to 0.

SLNDEN bit (SSL Negation Delay Setting Enable)

The SLNDEN bit specifies the SSL negation delay, the period from the time the SPI in master mode stops RSPCK oscillation until the SPI sets the SSLni signal to inactive. If the SLNDEN bit is 0, the SPI sets the SSL negation delay to 1 RSPCK. If the SLNDEN bit is 1, the SPI negates the SSL signal at the SSL negation delay according to the SSLND setting.

When using the SPI in slave mode, set the SLNDEN bit to 0.

SCKDEN bit (RSPCK Delay Setting Enable)

The SCKDEN bit specifies the SPI clock delay, the period from the point when the SPI in master mode asserts the SSLni signal until the RSPCK starts oscillation. If the SCKDEN bit is 0, the SPI sets the RSPCK delay to 1 RSPCK. If the SCKDEN bit is 1, the SPI starts the oscillation of RSPCK at an RSPCK delay according to the SPCKD setting.

When using the SPI in slave mode, set the SCKDEN bit to 0.

31.2.15 SPDCR2 : SPI Data Control Register 2

Base address: SPIn = 0x4011_A000 + 0x0100 × n (n = 0 to 2)

Offset address: 0x20

Bit position:	7	6	5	4	3	2	1	0
Bit field:	—	—	—	—	—	—	SINV	BYSW
Value after reset:	0	0	0	0	0	0	0	0

Bit	Symbol	Function	R/W
0	BYSW	Byte Swap Operating Mode Select 0: Byte Swap OFF 1: Byte Swap ON	R/W
1	SINV	Serial Data Invert Bit 0: Not invert serial data 1: Invert serial data	R/W
7:2	—	These bits are read as 0. The write value should be 0.	R/W

SPI Data Control Register 2 (SPDCR2) is the setting register, that is to swap a transmit/receive data in byte units and to invert serial data. If these bits are modified while the SPI in slave mode is enabled (SPCR.SPE = 1), subsequent operation is not guaranteed.

BYSW bit (Byte Swap Operating Mode Select)

It is a setting bit, that is to swap a transmit/receive data in byte units. When byte access is valid (SPDCR.SPBYT = 1), byte swap is invalid. When byte swap is valid, parity function must be invalid (SPCR2.SPPE bit = 0). Setting change of BYSW bit must be SPCR.SPE bit = 0.

A data after byte swap is different by a data length (setting of SPCMD.SPB[3:0]).

When byte swap, A data length (setting of SPB[3:0]) must be set to 32 bit or 16bit. Other case of data length (that is 8 to 15, 20, 24 bit length), byte swap is not guaranteed. Before swap and after swap are shown below (length data (32 bit/16 bit)).

- Length data 32 bits (SPB[3:0] = 0010b or 0011b)

  Before swap: [31:24] [23:16] [15:8] [7:0]

  After swap: [7:0] [15:8] [23:16] [31:24]
- Length data 16 bit (SPB[3:0] = 1111b)

  Before swap: [31:24] [23:16]

  After swap: [23:16] [31:24]

When byte access mode (SPDCR.SPBT = 1), byte swap setting is invalid.

When byte swap is valid, set parity function to invalid (SPCR2.SPPE = 0). When the parity function set to valid, the behavior is not guaranteed.

SINV bit (Serial Data Invert Bit)

This bit is used to invert transmit data and receive data.

When the SINV bit is set to 1, transmit buffer (SPTX) data is inverted to invert transmit data and receive data, and then the inverted data is stored in the receive buffer (SPRX). The parity bit is the value corresponding to the inverted transmission/reception data.

31.2.16 SPCR3 : SPI Control Register 3

Base address: SPIn = 0x4011_A000 + 0x0100 × n (n = 0 to 2)

Offset address: 0x21

Bit position:	7	6	5	4	3	2	1	0
Bit field:	—	—	—	CENDIE	—	—	BFDS	ETXMD
Value after reset:	0	0	0	0	0	0	0	0

Bit	Symbol	Function	R/W
0	ETXMD	Extended Communication Mode Select 0: Full-duplex synchronous or transmit-only serial communications. [the SPCR.TXMD bit is enabled] 1: Receive-only serial communications in slave mode (SPCR.MSTR bit = 0). [the SPCR.TXMD bit is disabled] Setting is prohibited in master mode (SPCR.MSTR bit = 1).	R/W
1	BFDS	Between Burst Transfer Frames Delay Select 0: Delay (RSPCK delay, SSL negation delay and next-access delay) between frames is inserted in burst transfer. 1: Delay between frames is not inserted in burst transfer.	R/W
3:2	—	These bits are read as 0. The write value should be 0.	R/W
4	CENDIE	SPI Communication End Interrupt Enable 0: Communication end interrupt request is disabled. 1: Communication end interrupt request is enabled.	R/W
7:5	—	These bits are read as 0. The write value should be 0.	R/W

SPI control register 3 (SPCR3) is control register for operation mode. If you change the value of ETXMD and BFDS when the SPCR.SPE bit is 1, the SPI operation does not guarantee.

ETXMD bit (Extended Communication Mode Select)

This bit is valid on slave mode only (the SPCR.MSTR bit is 0). This bit select receive only operation. When the ETXMD bit is 1 on slave mode, the communication is only received not transmit (see section 31.3.6. Data Transfer Modes). When the ETXMD is 1, transmit data empty interrupt can not be used.

The communication state by each mode (master mode, slave mode) is shown as below. It is controlled by the ETXMD bit, the SPCR.MSTR bit and the TXMD bit.

Table 31.5 SPI communication state (master/slave mode)

SPCR.MSTR bit	SPCR3.ETXMD bit	SPCR.TXMD bit	Communication state
1	0	0	Transmit-receive master mode
1	0	1	Transmit master mode
0	0	0	Transmit-receive slave mode (default)
0	0	1	Transmit slave mode
0	1	—	Receive slave mode

BFDS bit (Between Burst Transfer Frames Delay Select)

This bit controls whether insert the delay time between the burst transfer frames.

This bit is valid when the SPCMD.SSLKP bit is 1 in master mode (the SPCR.MSTR bit is 1).

This bit should be set to 0 in slave mode. The usage of SSL delay control between transfer frames is shown as below. For details, see (4) Burst transfers.

Table 31.6 Usage of SSL delay control between transfer frames (Master mode)

Transmit		SPCMD.SSLKP bit	SPCR3.BFDS bit	SSL delay control register*1 (RSPCK clock delay, SSL negation delay, next access delay)
Non-burst transmit		0	0	Any given value. You can control each delay value according to setting for RSPCK clock delay, SSL negation delay and next access delay.
Burst transmit with delay between frames	From the 1st frame to the last previous frame	1	0	
	The last frame	0	0	
Burst transmit with no delay between frames	From the 1st frame to the last previous frame	1	1	Any given value. But delay is inserted only below. ● RSPCK clock delay of the 1st frame ● SSL negation delay and next access delay of the last frame
	The last frame	0	1	

Note 1. Whether the setting value of following bits are valid or not depends on the setting value of the SPCMD.SPNDEN bit (see section 31.2.14. SPCMDm : SPI Command Register m (m = 0 to 7)).
The SPCKD.SCKDL[2:0] bits: RSPCK delay
The SSLND.SLNDL[2:0] bits: SSL negate delay
The SPND.SPNDL[2:0] bits: Next access delay

CENDIE bit (SPI Communication End Interrupt Enable)

This bit controls generation of a communication end interrupt request.

31.3 Operation

In this section, the serial transfer period refers to the period from the beginning of driving valid data to the fetching of the final valid data.

31.3.1 Overview of SPI Operation

The SPI is capable of synchronous serial transfers in the following modes:

- Slave mode (SPI operation)
- Single master mode (SPI operation)
- Multi-master mode (SPI operation)
- Slave mode (clock synchronous operation)
- Master mode (clock synchronous operation)

The SPI mode can be selected by using the MSTR, MODFEN, and SPMS bits in SPCR. Table 31.7 lists the relationship between SPI modes and SPCR settings, and a description of each mode.

Table 31.7 Relationship between SPCR settings and SPI modes (1 of 2)

Mode	Slave (SPI operation)	Single-master (SPI operation)	Multi-master (SPI operation)	Slave (clock synchronous operation)	Master (clock synchronous operation)
MSTR bit setting	0	1	1	0	1
MODFEN bit setting	0 or 1	0	1	0	0
SPMS bit setting	0	0	0	1	1
RSPCKn pins	Input	Output	Output/Hi-Z	Input	Output
MOSIn pin	Input	Output	Output/Hi-Z	Input	Output
MISOn pin	Output/Hi-Z	Input	Input	Output	Input

Table 31.7 Relationship between SPCR settings and SPI modes (2 of 2)

Mode	Slave (SPI operation)	Single-master (SPI operation)	Multi-master (SPI operation)	Slave (clock synchronous operation)	Master (clock synchronous operation)
SSLn0 pins	Input	Output	Input	Hi-Z*1	Hi-Z*1
SSLn1 to SSLn3 pins	Hi-Z*1	Output	Output/Hi-Z	Hi-Z*1	Hi-Z*1
SSL polarity change function	Supported	Supported	Supported	—	—
Max transfer rate	PCLKA/4	PCLKA/2	PCLKA/2	PCLKA/4	PCLKA/2
Clock source	RSPCK input	On-chip baud rate generator	On-chip baud rate generator	RSPCK input	On-chip baud rate generator
Clock polarity	Two				
Clock phase	Two	Two	Two	One (CPHA = 1)	Two
First transfer bit	MSB/LSB				
Transfer data length	8 to 16, 20, 24, 32 bits				
Burst transfer	Possible (CPHA = 1)	Possible (CPHA = 0, 1)	Possible (CPHA = 0, 1)	—	—
RSPCK delay control	Not supported	Supported	Supported	Not supported	Supported
SSL negation delay control	Not supported	Supported	Supported	Not supported	Supported
Next-access delay control	Not supported	Supported	Supported	Not supported	Supported
Transfer trigger	SSL input active or RSPCK oscillation	Write to transmit buffer on generation of transmit buffer empty interrupt request (SPTEF = 1)	Write to transmit buffer on generation of transmit buffer empty interrupt request (SPTEF = 1)	RSPCK oscillation	Write to transmit buffer on generation of transmit buffer empty interrupt request (SPTEF = 1)
Sequence control	Not supported	Supported	Supported	Not supported	Supported
Transmit buffer empty detection	Supported*5				
Receive buffer full detection	Supported*2				
Overrun error detection	Supported*2	Supported*2*4	Supported*2*4	Supported*2	Supported*2
Parity error detection	Supported*3*2				
Mode fault error detection	Supported (MODFEN = 1)	Not supported	Supported	Not supported	Not supported
Underrun error detection	Supported*5	Not supported	Not supported	Supported*5	Not supported

Note 1. This function is not supported in this mode.
Note 2. When the SPCR.TXMD bit is 1, detection of receiver buffer full, overrun error, and parity error are not performed.
Note 3. When the SPCR2.SPPE bit is 0, parity error detection is not performed.
Note 4. When the SPCR2.SCKASE bit is 1, overrun error detection does not proceed.
Note 5. When SPI is receive only slave mode, none of transmit buffer empty and underrun error is detected.

31.3.2 Controlling the SPI Pins

Based on the settings of the MSTR, MODFEN, and SPMS bits in SPCR and the PmnPFS.NCODR bit for I/O Ports, the SPI can switch pin states. Table 31.8 lists the relationship between pin states and bit settings. Setting the PmnPFS.NCODR bit for an I/O port to 0 selects the CMOS output. Setting it to 1 selects the open-drain output. The I/O port settings must follow this relationship.

Table 31.8 Relationship between pin states and bit settings

Mode	Pin	Pin state*2	
		PmnPFS.NCODR bit for I/O ports = 0	PmnPFS.NCODR bit for I/O ports = 1
Single-master mode (SPI operation) (MSTR = 1, MODFEN = 0, SPMS = 0)	RSPCKn	CMOS output	Open-drain output
	SSLn0 to SSLn3	CMOS output	Open-drain output
	MOSIn	CMOS output	Open-drain output
	MISOn	Input	Input
Multi-master mode (SPI operation) (MSTR = 1, MODFEN = 1, SPMS = 0)	RSPCKn*3	CMOS output/Hi-Z	Open-drain output/Hi-Z
	SSLn0	Input	Input
	SSLn1 to SSLn3*3	CMOS output/Hi-Z	Open-drain output/Hi-Z
	MOSIn*3	CMOS output/Hi-Z	Open-drain output/Hi-Z
	MISOn	Input	Input
Slave mode (SPI operation) (MSTR = 0, SPMS = 0)	RSPCKn	Input	Input
	SSLn0	Input	Input
	SSLn1 to SSLn3*5	Hi-Z*1	Hi-Z*1
	MOSIn	Input	Input
	MISOn*4	CMOS output/Hi-Z	Open-drain output/Hi-Z
Master mode (clock synchronous operation) (MSTR = 1, MODFEN = 0, SPMS = 1)	RSPCKn	CMOS output	Open-drain output
	SSLn0 to SSLn3*5	Hi-Z*1	Hi-Z*1
	MOSIn	CMOS output	Open-drain output
	MISOn	Input	Input
Slave mode (clock synchronous operation) (MSTR = 0, SPMS = 1)	RSPCKn	Input	Input
	SSLn0 to SSLn3*5	Hi-Z*1	Hi-Z*1
	MOSIn	Input	Input
	MISOn	CMOS output	Open-drain output

Note 1. This function is not supported in this mode.
Note 2. SPI settings are not reflected in multiplexed pins for which the SPI function is not selected.
Note 3. When SSLn0 is at the active level, the pin state is Hi-Z. Whether or not the input signal is at the active level determines the setting of the SSLP.SSL0P bit.
Note 4. When SSLn0 is at the non-active level or the SPCR.SPE bit is 0, the pin state is Hi-Z. Whether or not the input signal is at the active level determines the setting of the SSLP.SSL0P bit.
Note 5. These pins are available for use as I/O port pins.

The SPI in single-master mode (SPI operation) or multi-master mode (SPI operation) determines the MOSI signal values during the SSL negation period (including the SSL retention period during a burst transfer) based on the MOIFE and MOIFV bit settings in SPPCR, as listed in Table 31.9.

Table 31.9 MOSI signal value determination during SSL negation

MOIFE bit	MOIFV bit	MOSIn signal value during SSL negation
0	0, 1	Final data from previous transfer
1	0	Low
1	1	High

31.3.3 SPI System Configuration Examples

31.3.3.1 Single-master/single-slave with the MCU as a master

Figure 31.5 shows a single-master/single-slave SPI system configuration example where the MCU is used as a master. In the single-master/single-slave configuration, the SSLni outputs of the MCU (master) are not used. The SSL input of the SPI slave is fixed to the low level, and the SPI slave is maintained in the selected state.*1

Note 1. In the transfer format configured when the SPCMDm.CPHA bit is 0, the SSL signal for some slave devices cannot be fixed to an active level. In this case, always connect the SSLni output of the MCU to the SSL input of the slave device.

The MCU (master) drives the RSPCKn and MOSIn signals. The SPI slave drives the MISO signal.

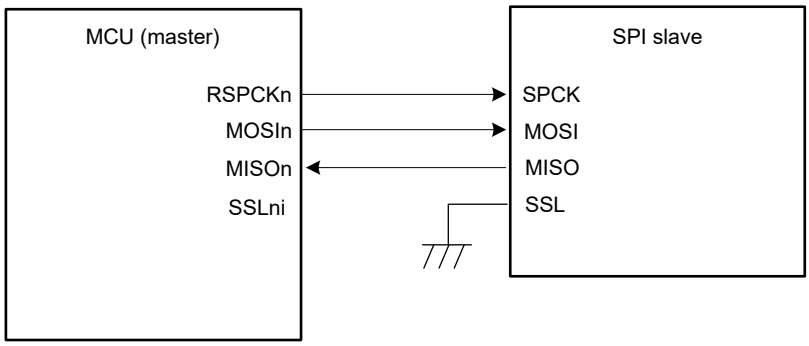

Figure 31.5 Single-master/single-slave configuration example with the MCU as a master

31.3.3.2 Single-master/single-slave with the MCU as a slave

Figure 31.6 shows a single-master/single-slave SPI system configuration example where the MCU is used as a slave. When the MCU operates as a slave, the SSLn0 pin is used as SSL input. The SPI master drives the RSPCK and MOSI signals. The MCU (slave) drives the MISOn signal.*1

Note 1. When SSLn0 is at a non-active level, the pin state is Hi-Z.

In the single-slave configuration when the SPCMDm.CPHA bit is set to 1, the SSLn0 input of the MCU (slave) is fixed to the low level and the MCU (slave) is maintained in the selected state. This enables serial transfer execution (Figure 31.7). However, the communication end interrupt does not output when SSL0 input is fixed as Figure 31.7.

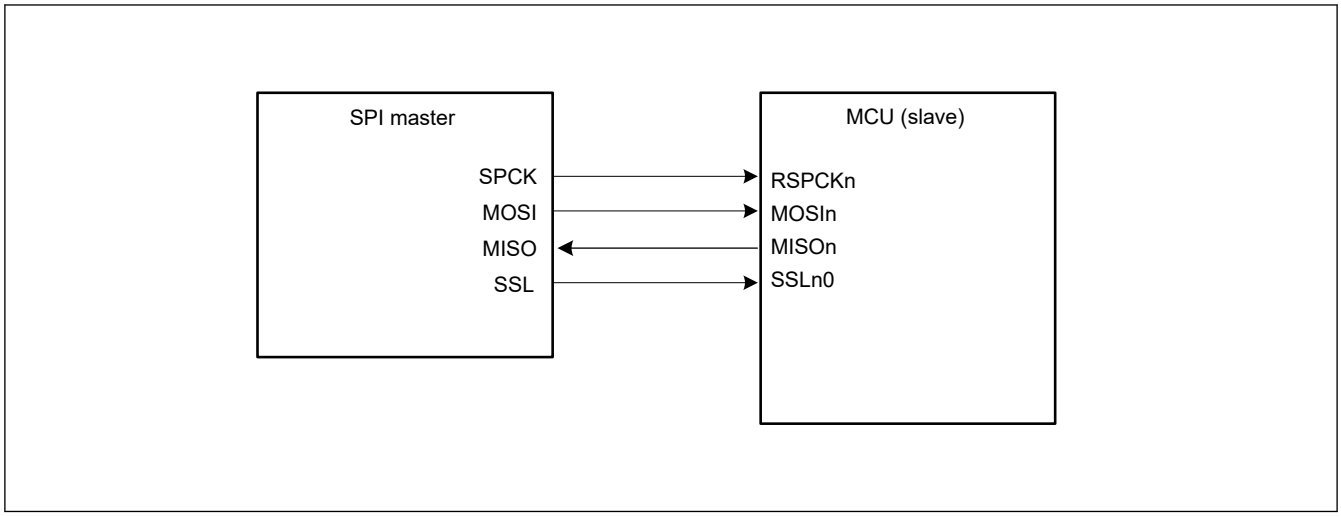

Figure 31.6 Single-master/single-slave configuration example with the MCU as a slave and CPHA = 0

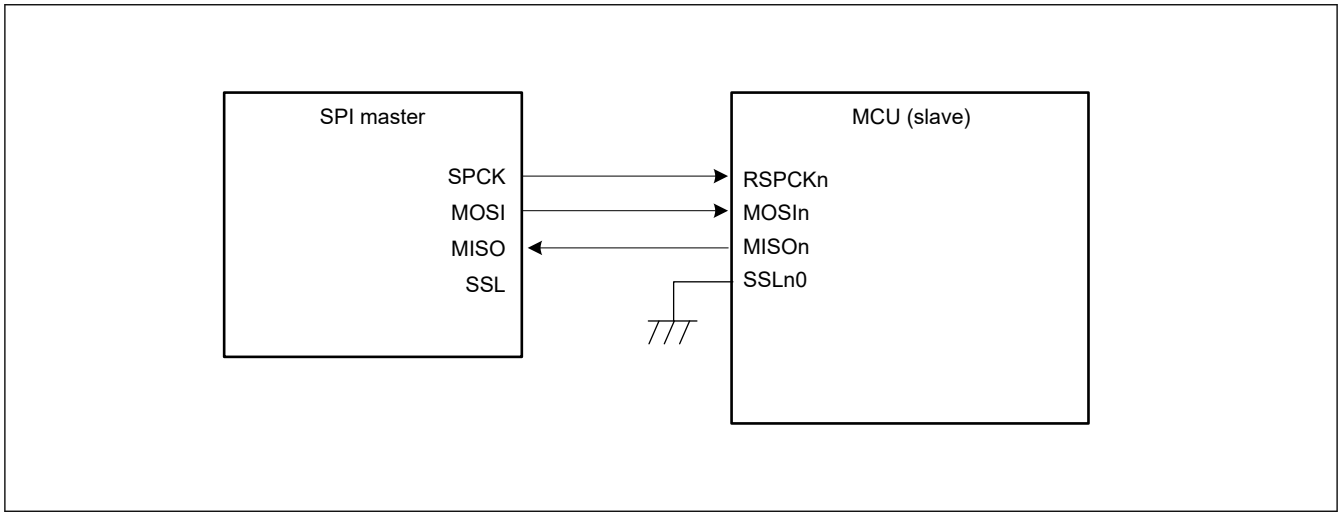

Figure 31.7 Single-master/single-slave configuration example with the MCU as a slave and CPHA = 1

31.3.3.3 Single-master/Multi-slave with the MCU as a Master

Figure 31.8 shows a single-master/multi-slave SPI system configuration example where the MCU is used as a master. In this example, the SPI system includes the MCU (master) and four slaves (SPI slave 0 to SPI slave 3).

The RSPCKn and MOSIn outputs of the MCU (master) are connected to the RSPCK and MOSI inputs of SPI slaves 0 to 3. The MISO outputs of SPI slaves 0 to 3 are all connected to the MISOn input of the MCU (master). The SSLn0 to SSLn3 outputs of the MCU (master) are connected to the SSL inputs of SPI slaves 0 to 3, respectively.

The MCU (master) drives the RSPCKn, MOSIn, and SSLn0 to SSLn3 signals. Out of the SPI slaves 0 to 3, the slave that receives low-level input into the SSL input drives the MISO signal.

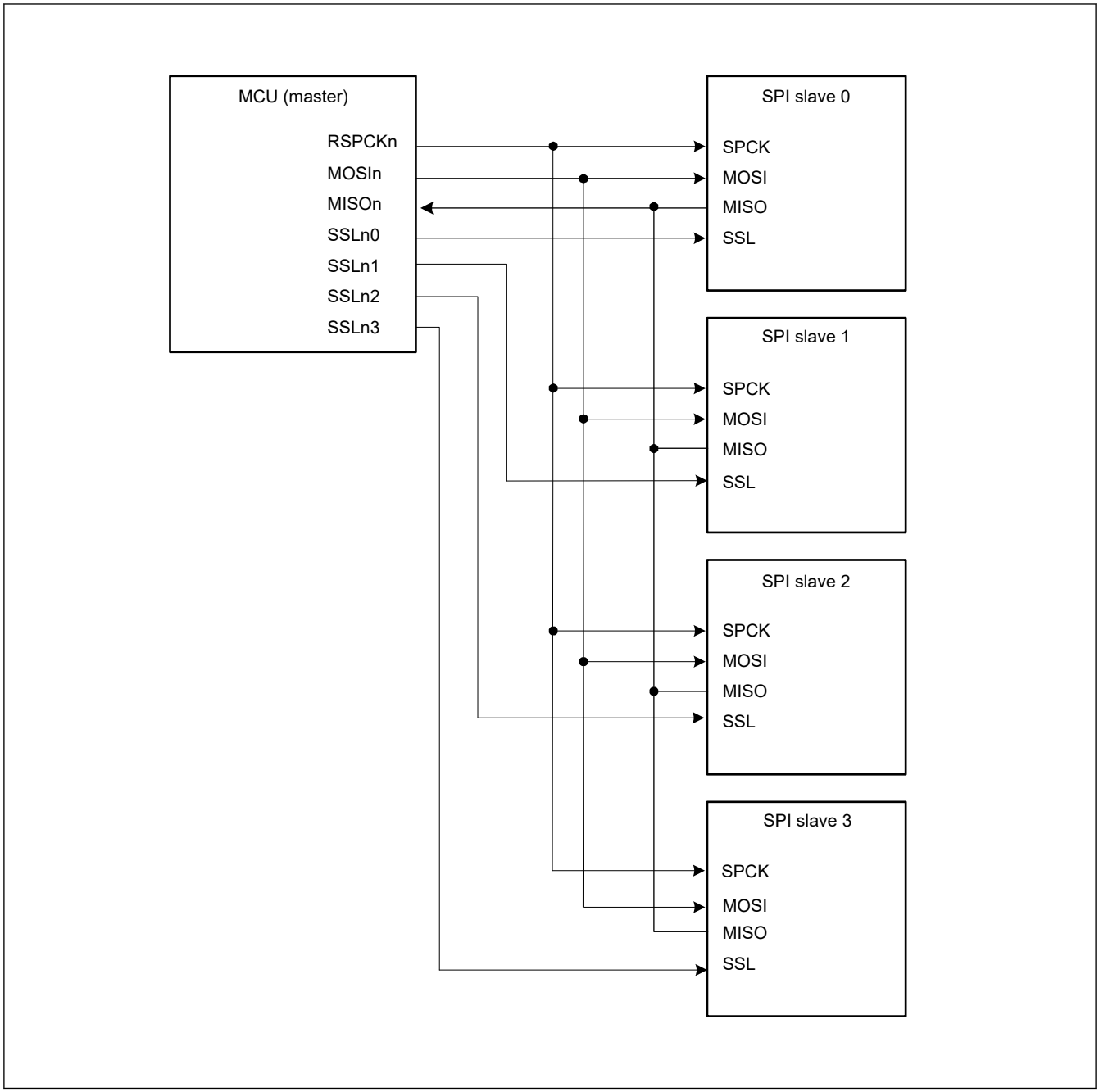

Figure 31.8 Single-master/multi-slave configuration example with the MCU as a master

31.3.3.4 Single-master/Multi-slave with the MCU as a Slave

Figure 31.9 shows a single-master/multi-slave SPI system configuration example where the MCU is used as a slave. In this example, the SPI system includes an SPI master and two MCUs (slaves X and Y).

The SPCK and MOSI outputs of the SPI master are connected to the RSPCKn and MOSIn inputs of the MCUs (slaves X and Y). The MISOn outputs of the MCUs (slaves X and Y) are all connected to the MISO input of the SPI master. The SSLX and SSLY outputs of the SPI master are connected to the SSLn0 inputs of the MCUs (slaves X and Y, respectively).

The SPI master drives the SPCK, MOSI, SSLX, and SSLY signals. Of the MCUs (slaves X and Y), the slave that receives low-level input into the SSLn0 input drives the MISOn signal.

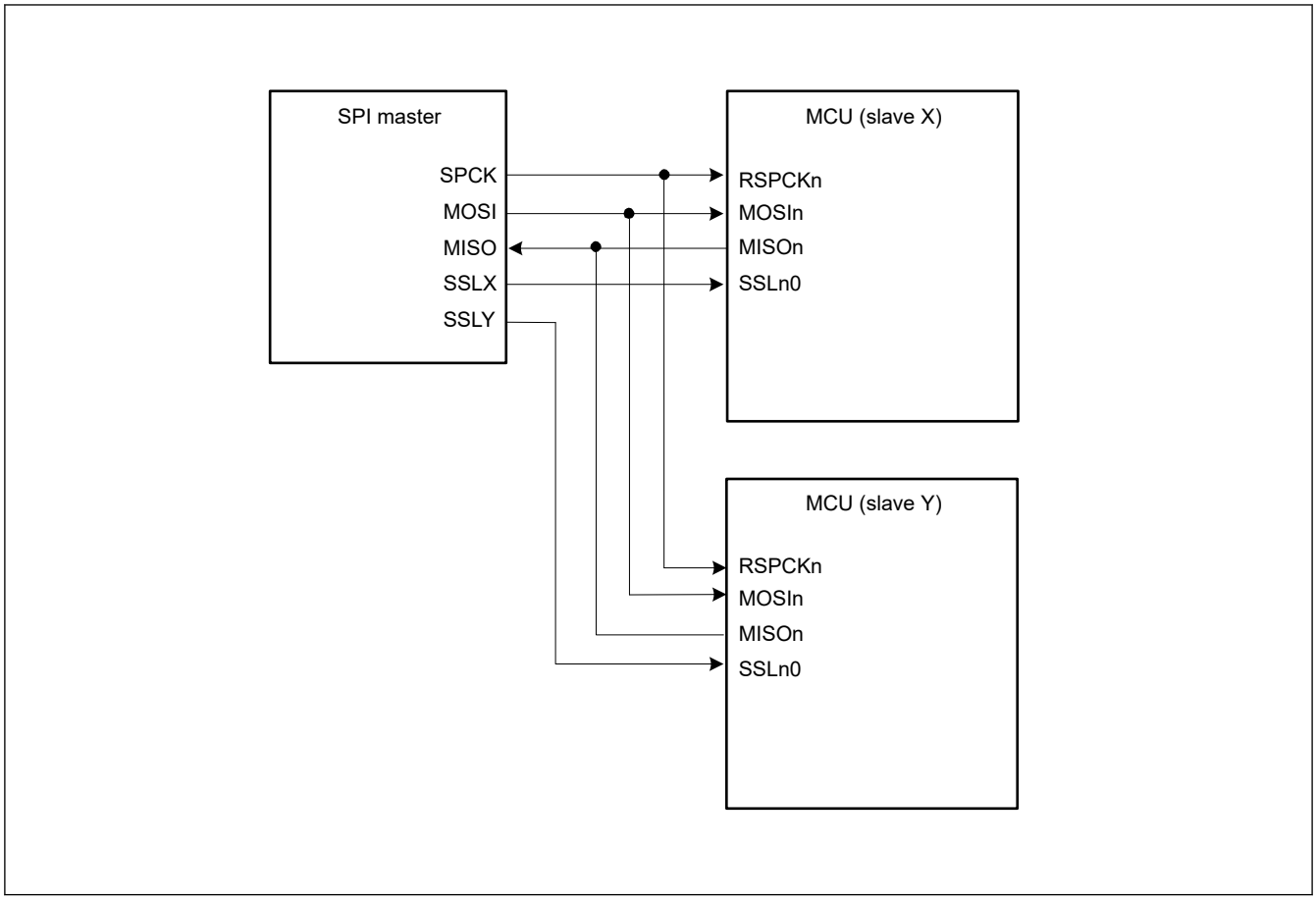

Figure 31.9 Single-master/multi-slave configuration example with the MCU as a slave

31.3.3.5 Multi-master/multi-slave with the MCU as a master

Figure 31.10 shows a multi-master/multi-slave SPI system configuration example where the MCU is used as a master. In this example, the SPI system includes two MCUs (masters X and Y) and two SPI slaves (SPI slaves 1 and 2).

The RSPCKn and MOSIn outputs of the MCUs (masters X and Y) are connected to the RSPCK and MOSI inputs of SPI slaves 1 and 2. The MISO outputs of SPI slaves 1 and 2 are connected to the MISOn inputs of the MCUs (masters X and Y). Any generic port Y output from the MCU (master X) is connected to the SSLn0 input of the MCU (master Y). Any generic port X output of the MCU (master Y) is connected to the SSLn0 input of the MCU (master X). The SSLn1 and SSLn2 outputs of the MCUs (masters X and Y) are connected to the SSL inputs of the SPI slaves 1 and 2. In this configuration example, because the system can be comprised solely of SSLn0 input, and SSLn1 and SSLn2 outputs for slave connections, the SSLn3 output of the MCU is not required.

The MCU drives the RSPCKn, MOSIn, SSLn1, and SSLn2 signals when the SSLn0 input level is high. When the SSLn0 input level is low, the MCU detects a mode fault error, sets RSPCKn, MOSIn, SSLn1, and SSLn2 to Hi-Z, and releases the SPI bus directly to the other master. Of the SPI slaves 1 and 2, the slave that receives low-level input into the SSL input drives the MISO signal.

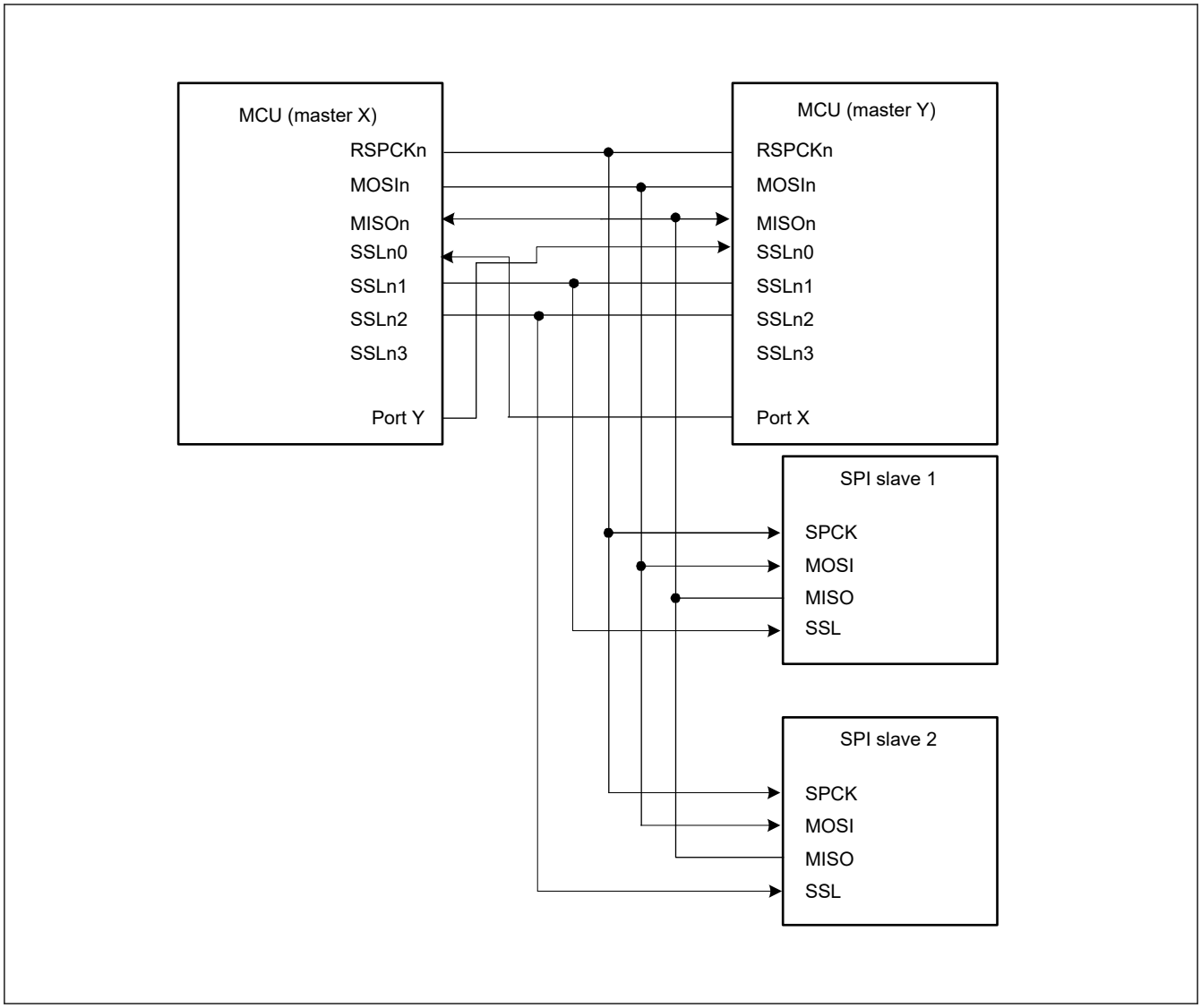

Figure 31.10 Multi-master/multi-slave configuration example with the MCU as a master

31.3.3.6 Master and slave in clock synchronous mode with the MCU configured as a master

Figure 31.11 shows a master and slave in clock synchronous mode configuration example where the MCU is used as a master. In this configuration, SSLni of the MCU (master) are not used.

The MCU (master) drives the RSPCKn and MOSIn signals. The SPI slave drives the MISO signal.

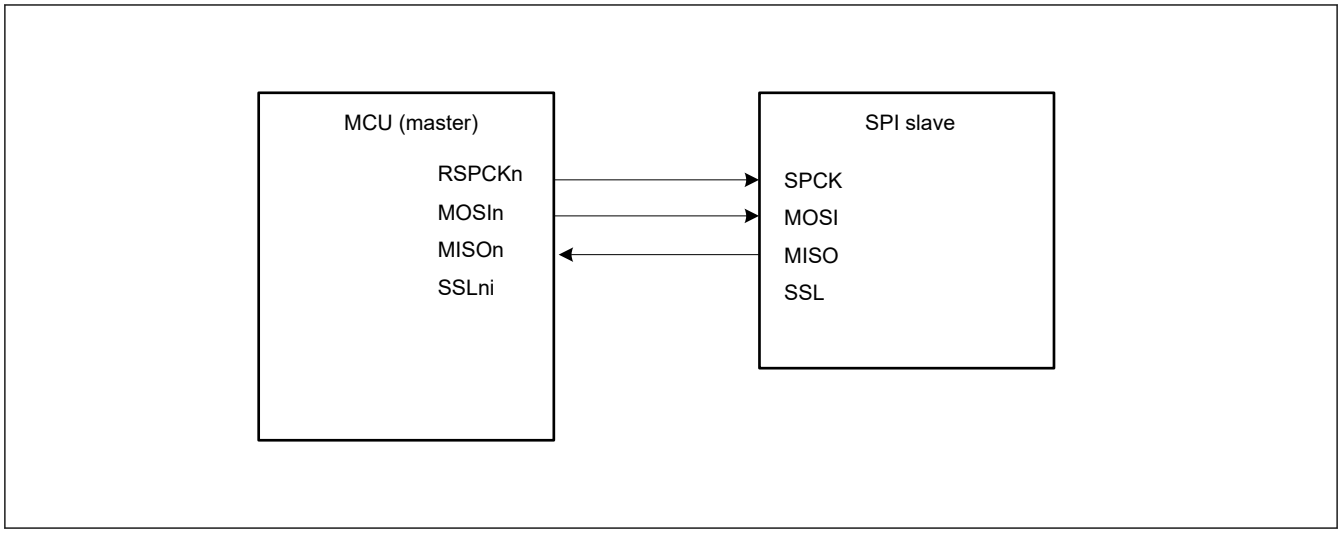

Figure 31.11 Clock synchronous master/slave configuration example with the MCU as a master

31.3.3.7 Master and slave in clock synchronous mode with the MCU as a slave

Figure 31.12 shows a master and slave in clock synchronous mode configuration example where the MCU is used as a slave. When the MCU operates as a slave (clock synchronous operation), the MCU (slave) drives the MISOn signal and the SPI master drives the SPCK and MOSI signals. In addition, SSLn0 to SSLn3 of the MCU (slave) are not used.

The MCU (slave) can only execute serial transfers in the single-slave configuration when the SPCMDm.CPHA bit is set to 1.

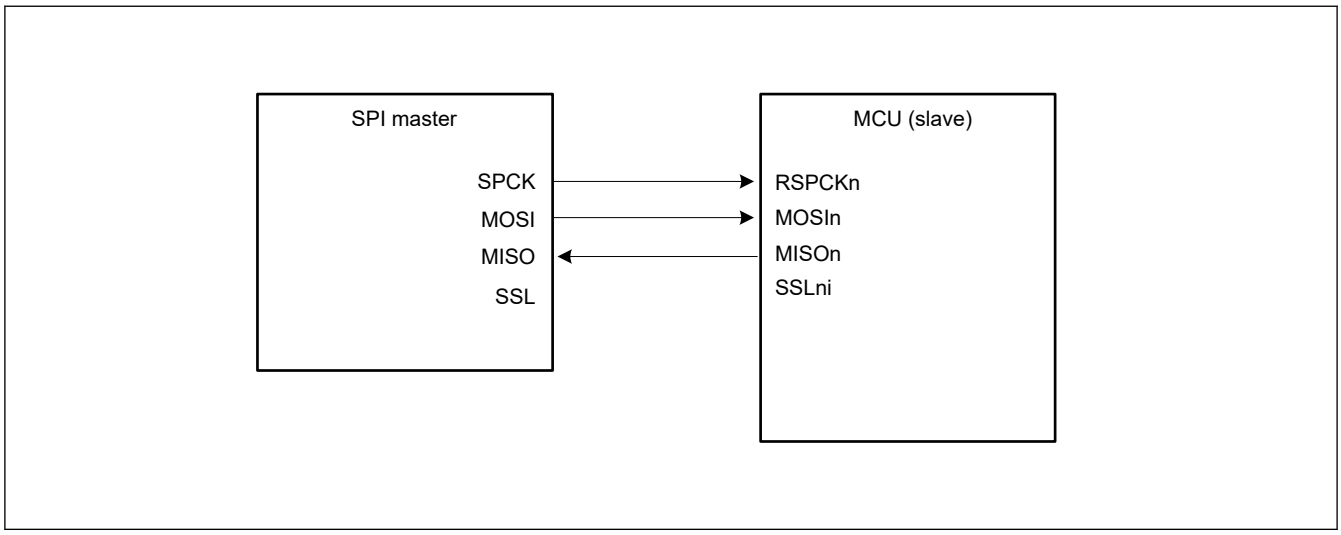

Figure 31.12 Clock synchronous master/slave configuration example with the MCU as a slave and CPHA = 1

31.3.4 Data Formats

The data format of the SPI depends on the settings in SPI Command Register m (SPCMDm) and the parity enable bit in SPI Control Register 2 (SPCR2.SPPE). Regardless of whether the MSB or LSB is first, the SPI treats the range from the LSB bit in the SPI Data Register (SPDR/SPDR_HA) to the bit associated with the selected data length, as transfer data.

This section shows the format of one frame of data before or after transfer.

Data format with parity disabled

When parity is disabled, transmission or reception of data proceeds with the length in bits selected in the SPI data length setting in SPI Command Register m (SPCMDm.SPB[3:0]).

Data format with parity enabled

When parity is enabled, transmission or reception of data proceeds with the length in bits selected in the SPI data length setting in SPI Command Register m (SPCMDm.SPB[3:0]). In this case, however, the last bit is a parity bit.

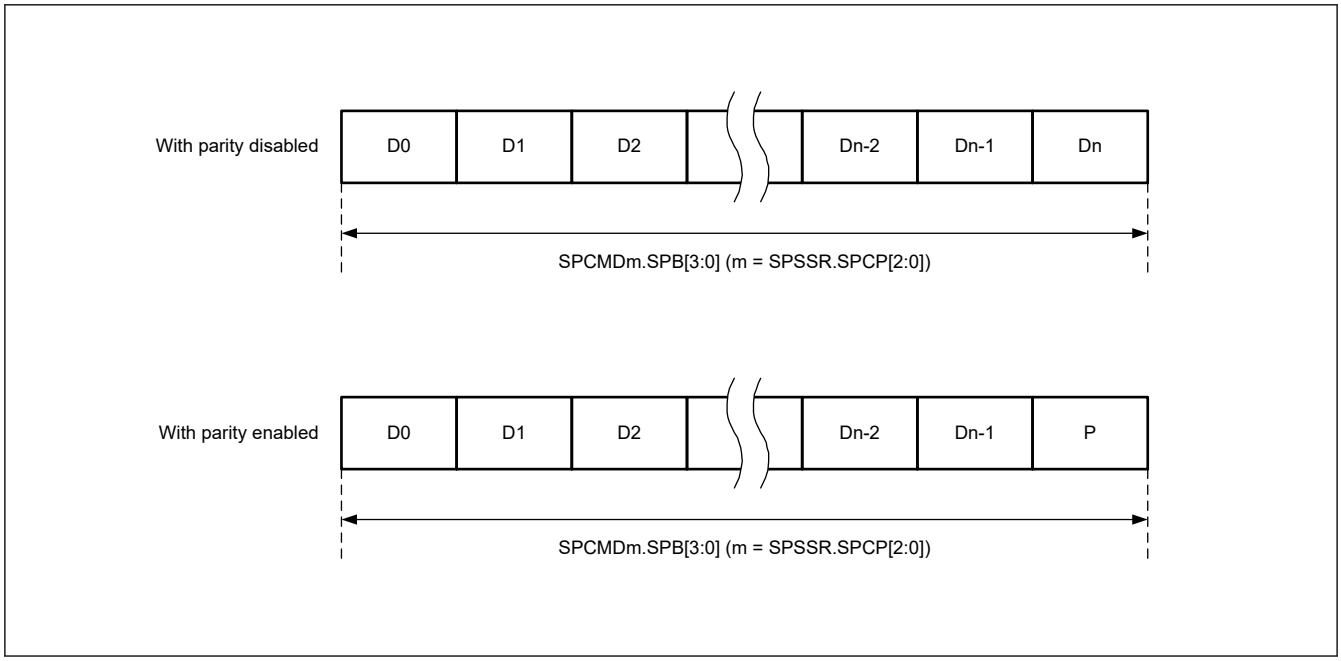

Figure 31.13 Data format with parity disabled and enabled

31.3.4.1 Operation when parity is disabled (SPCR2.SPPE = 0)

When parity is disabled, data for transmission is copied to the shift register with no pre-processing. This section describes the connection between the SPI Data Register (SPDR/SPDR_HA) and the shift register in terms of the combination of MSB- or LSB-first order and data length.

(1) MSB-first transfer with 32-bit data

Figure 31.14 shows the operation of the SPI Data Register (SPDR) and the shift register in a transfer with parity disabled, a SPI data length of 32 bits, and MSB-first selected.

In transmission, bits T31 to T00 from the current stage of the transmit buffer are copied to the shift register. Data for transmission is shifted out from the shift register from T31 to T30, and continuing to T00.

In reception, received data is shifted in bit-by-bit through bit[0] of the shift register. When the R31 to R00 bits are collected after input of the required number of RSPCK cycles, the value in the shift register is copied to the receive buffer.

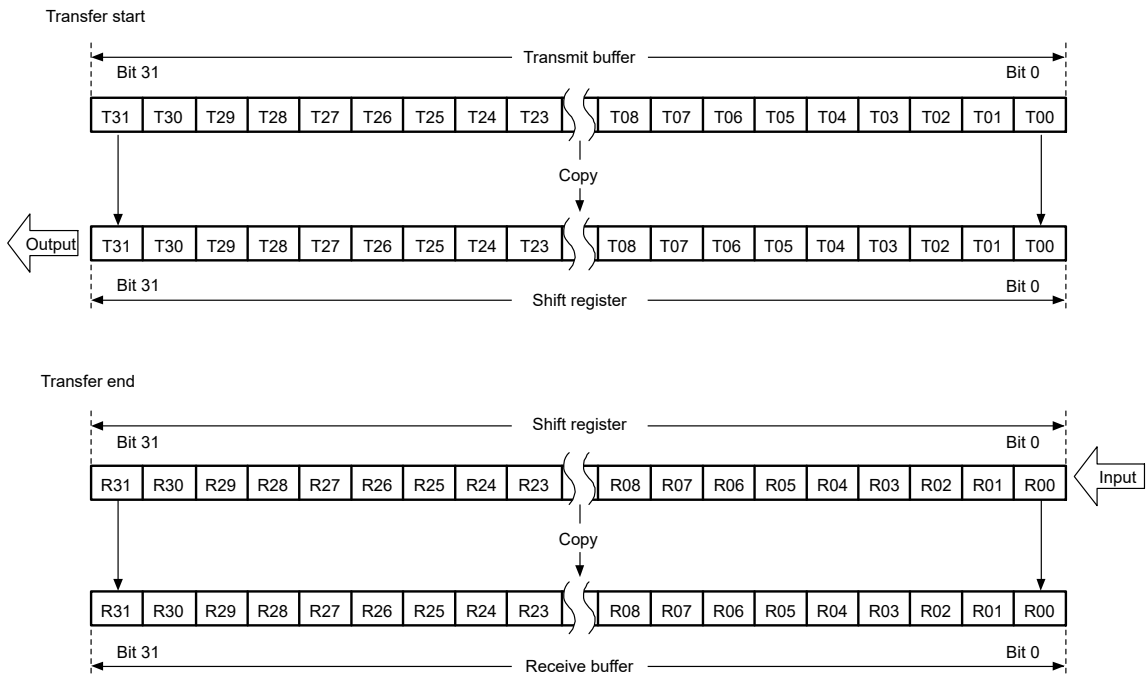

Note: Output = MOSI (master)/MISO (slave), input = MISO (master)/MOSI (slave)

Figure 31.14 MSB-first transfer with 32-bit data and parity disabled

(2) MSB-first transfer with 24-bit data

Figure 31.15 shows the operation of the SPI Data Register (SPDR) and the shift register in a transfer with parity disabled, an SPI data length of 24 bits for an example that is not 32 bits, and MSB-first selected.

In transmission, the lower 24 bits (T23 to T00) from the current stage of the transmit buffer are copied to the shift register. Data for transmission is shifted out from the shift register from T23 to T22, and continuing to T00.

In reception, received data is shifted in bit-by-bit through bit[0] of the shift register. When the R23 to R00 bits are collected after input of the required number of RSPCK cycles, the value in the shift register is copied to the receive buffer. The upper 8 bits of the transmit buffer are stored in the upper 8 bits of the receive buffer in case of transmit-receive operation. Writing 0 to bits T31 to T24 during transmission leads to 0 being inserted in the upper 8 bits of the receive buffer. On the other hand, the upper 8-bits of the receive buffer is written 0 in case of receive only operation.

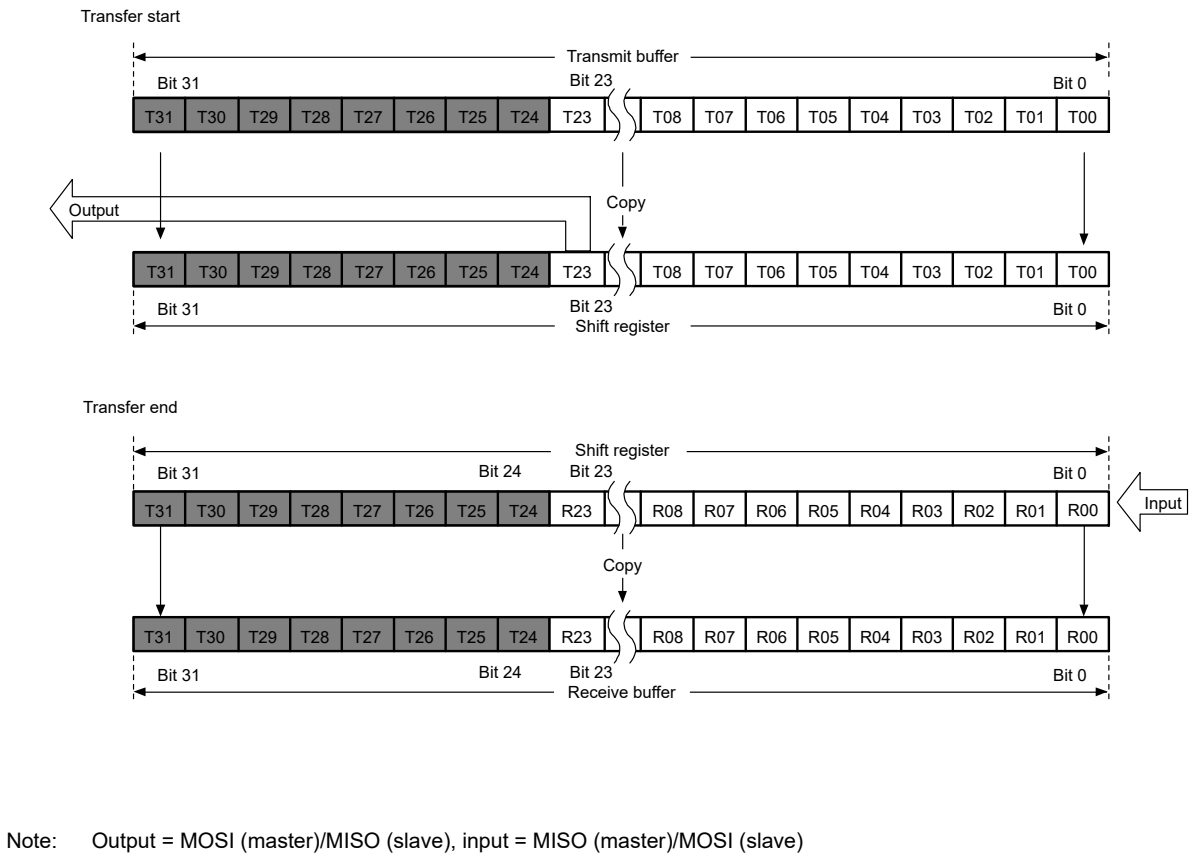

Note: Output = MOSI (master)/MISO (slave), input = MISO (master)/MOSI (slave)

Figure 31.15 MSB-first transfer with 24-bit data and parity disabled

(3) LSB-first transfer with 32-bit data

Figure 31.16 shows the operation of the SPI Data Register (SPDR) and the shift register in a transfer with parity disabled, an SPI data length of 32 bits, and LSB-first selected.

In transmission, bits T31 to T00 from the current stage of the transmit buffer are reordered bit-by-bit to obtain the order T00 to T31 for copying to the shift register. Data for transmission is shifted out from the shift register in order from T00 to T01, and continuing to T31.

In reception, received data is shifted in bit-by-bit through bit[0] of the shift register. When the R00 to R31 bits are collected after input of the required number of RSPCK cycles, the value in the shift register is copied to the receive buffer.

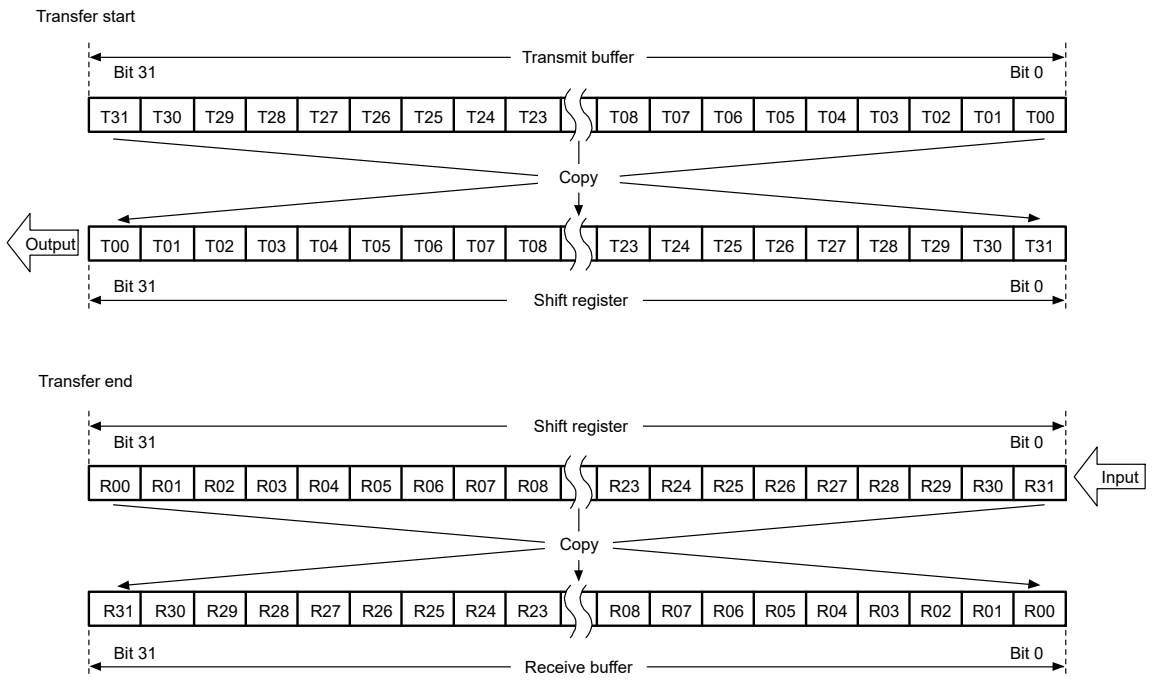

Note: Output = MOSI (master)/MISO (slave), input = MISO (master)/MOSI (slave)

Figure 31.16 LSB-first transfer with 32-bit data and parity disabled

(4) LSB-first transfer with 24-bit data

Figure 31.17 shows the operation of the SPI Data Register (SPDR) and the shift register in transfers with parity disabled, an SPI data length of 24 bits for an example that is not 32, and LSB-first selected.

In transmission, the lower 24 bits (T23 to T00) from the current stage of the transmit buffer are reordered bit-by-bit to obtain the order T00 to T23 for copying to the shift register. Data for transmission is shifted out from the shift register from T00 to T01, and continuing to T23.

In reception, received data is shifted in bit-by-bit through bit[8] of the shift register. When the R00 to R23 bits are collected after input of the required number of RSPCK cycles, the value in the shift register is copied to the receive buffer.

The upper 8 bits of the transmit buffer are stored in the upper 8 bits of the receive buffer in case of transmit-receive operation. Writing 0 to T31 to T24 during transmission leads to 0 being inserted in the upper 8 bits of the receive buffer. On the other hand, the upper 8-bits of the receive buffer is written 0 in case of receive only operation.

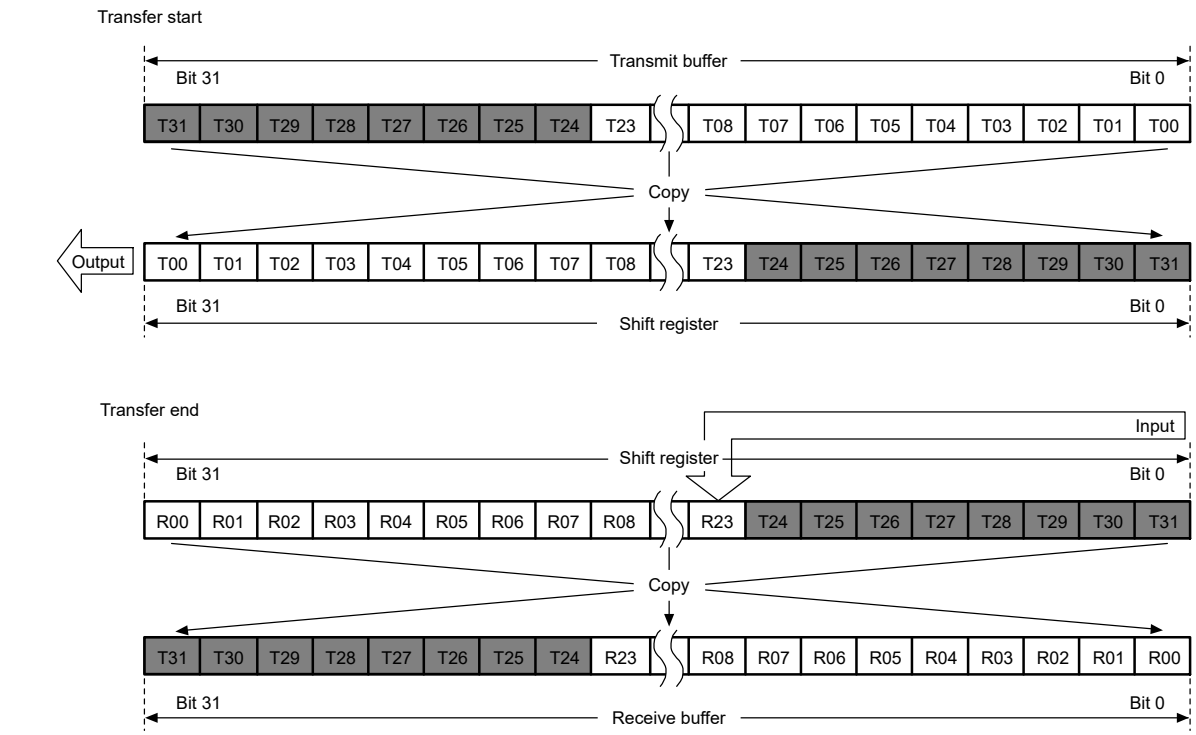

Note: Output = MOSI (master)/MISO (slave), input = MISO (master)/MOSI (slave)

Figure 31.17 LSB-first transfer with 24-bit data and parity disabled

31.3.4.2 Operation when parity is enabled (SPCR2.SPPE = 1)

When parity is enabled, the lowest-order bit of the data for transmission becomes a parity bit. Hardware calculates the value of the parity bit.

(1) MSB-first transfer with 32-bit data

Figure 31.18 shows the operation of the SPI Data Register (SPDR) and the shift register in a transfer with parity enabled, an SPI data length of 32 bits, and MSB-first selected.

In transmission, the value of the parity bit (P) is calculated from bits T31 to T01. This replaces the final bit, T00, and the whole value is copied to the shift register. Data is transmitted in the order T31, T30, …, T01, and P.

In reception, received data is shifted in bit-by-bit through bit[0] of the shift register. When the R31 to P bits are collected after input of the required number of RSPCK cycles, the value in the shift register is copied to the receive buffer. On copying of data to the shift register, the data from R31 to P is checked for parity.

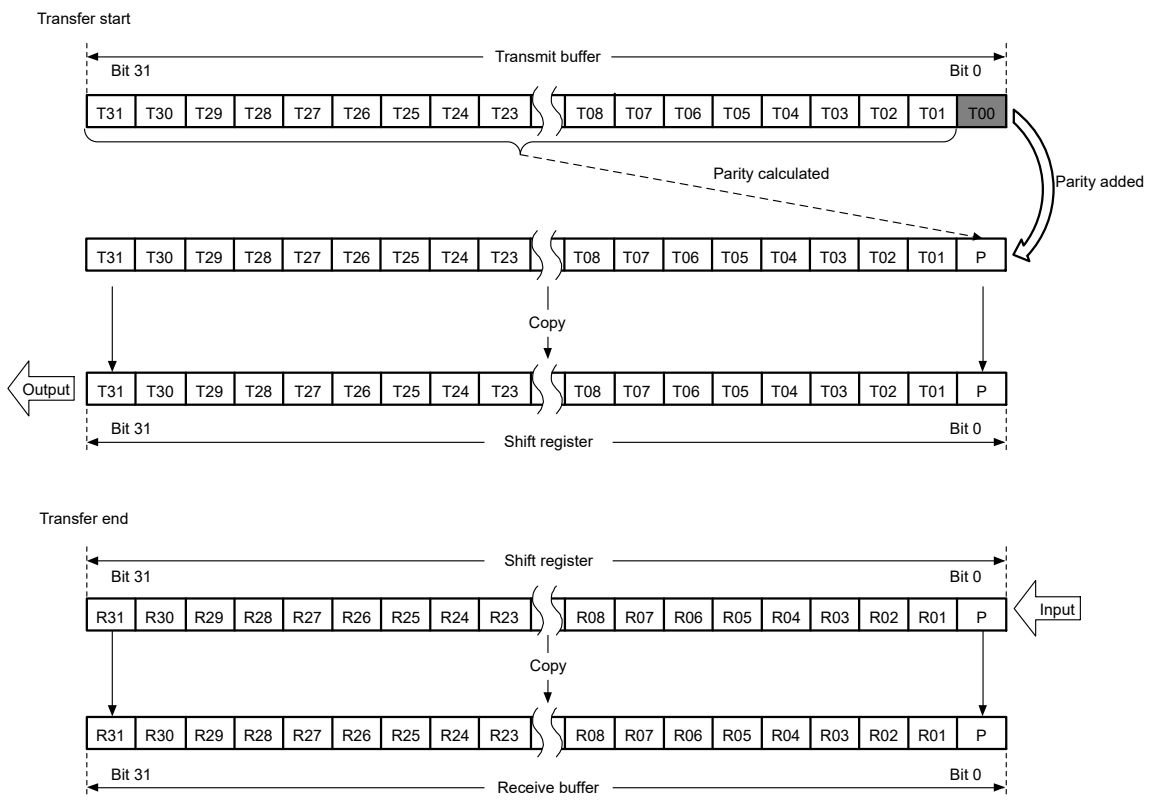

Note: Output = MOSI (master)/MISO (slave), input = MISO (master)/MOSI (slave)

Figure 31.18 MSB-first transfer with 32-bit data and parity enabled

(2) MSB-first transfer with 24-bit data

Figure 31.19 shows the operation of the SPI Data Register (SPDR) and the shift register in a transfer with parity enabled, a SPI data length of 24 bits, and MSB-first selected.

In transmission, the value of the parity bit (P) is calculated from bits T23 to T01. This replaces the final bit, T00, and the whole value is copied to the shift register. Data is transmitted in the order T23, T22, …, T01, and P.

In reception, received data is shifted in bit-by-bit through bit[0] of the shift register. When the R23 to P bits are collected after input of the required number of RSPCK cycles, the value in the shift register is copied to the receive buffer. On copying of data to the shift register, the data from R23 to P is checked for parity. The upper 8 bits of the transmit buffer is stored in the upper 8 bits of the receive buffer in case of transmit-receive operation. Writing 0 to T31 to T24 during transmission leads to 0 being inserted in the upper 8 bits of the receive buffer. On the other hand, the upper 8-bits of the receive buffer is written 0 in case of receive only operation.

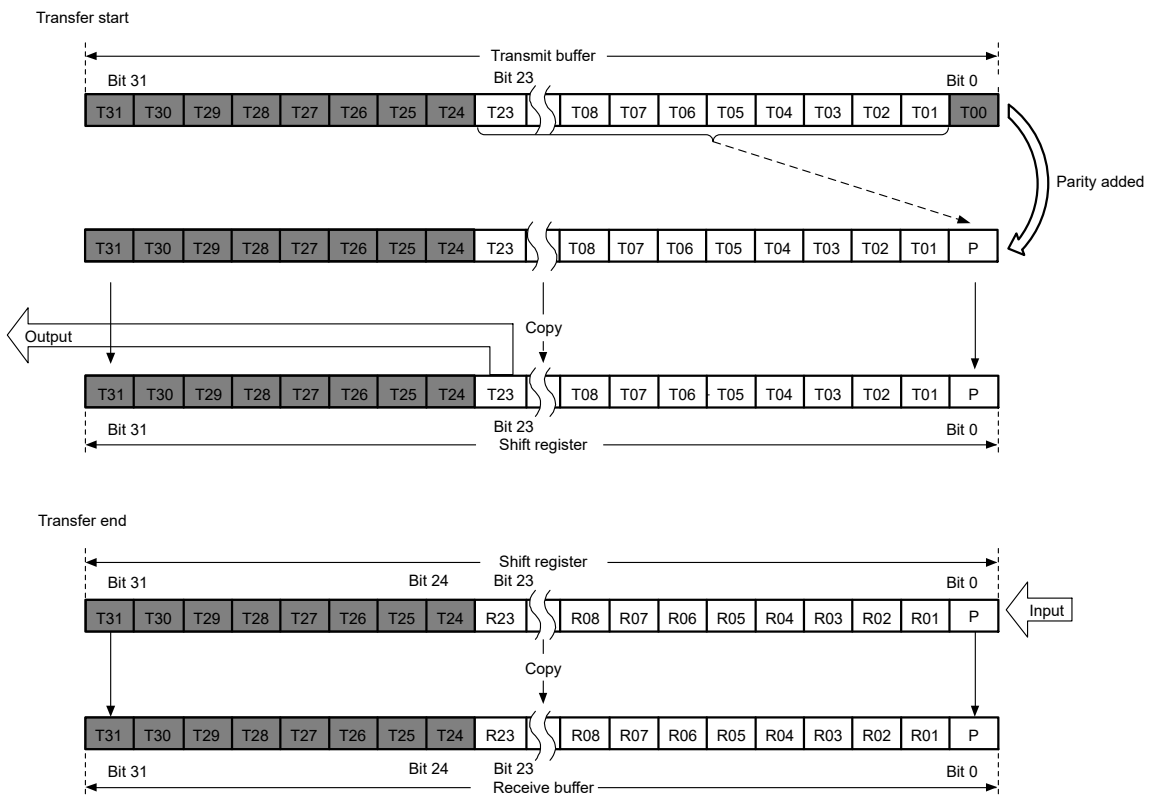

Note: Output = MOSI (master)/MISO (slave), input = MISO (master)/MOSI (slave)

Figure 31.19 MSB-first transfer with 24-bit data and parity enabled

(3) LSB-first transfer with 32-bit data

Figure 31.20 shows the operation of the SPI Data Register (SPDR) and the shift register in a transfer with parity enabled, an SPI data length of 32 bits, and LSB-first selected.

In transmission, the value of the parity bit (P) is calculated from bits T30 to T00. This replaces the final bit, T31, and the whole value is copied to the shift register. Data is transmitted in the order T00, T01, …, T30, and P.

In reception, received data is shifted in bit-by-bit through bit[0] of the shift register. When the R00 to P bits are collected after input of the required number of RSPCK cycles, the value in the shift register is copied to the receive buffer. On copying of data to the shift register, the data from R00 to P is checked for parity.

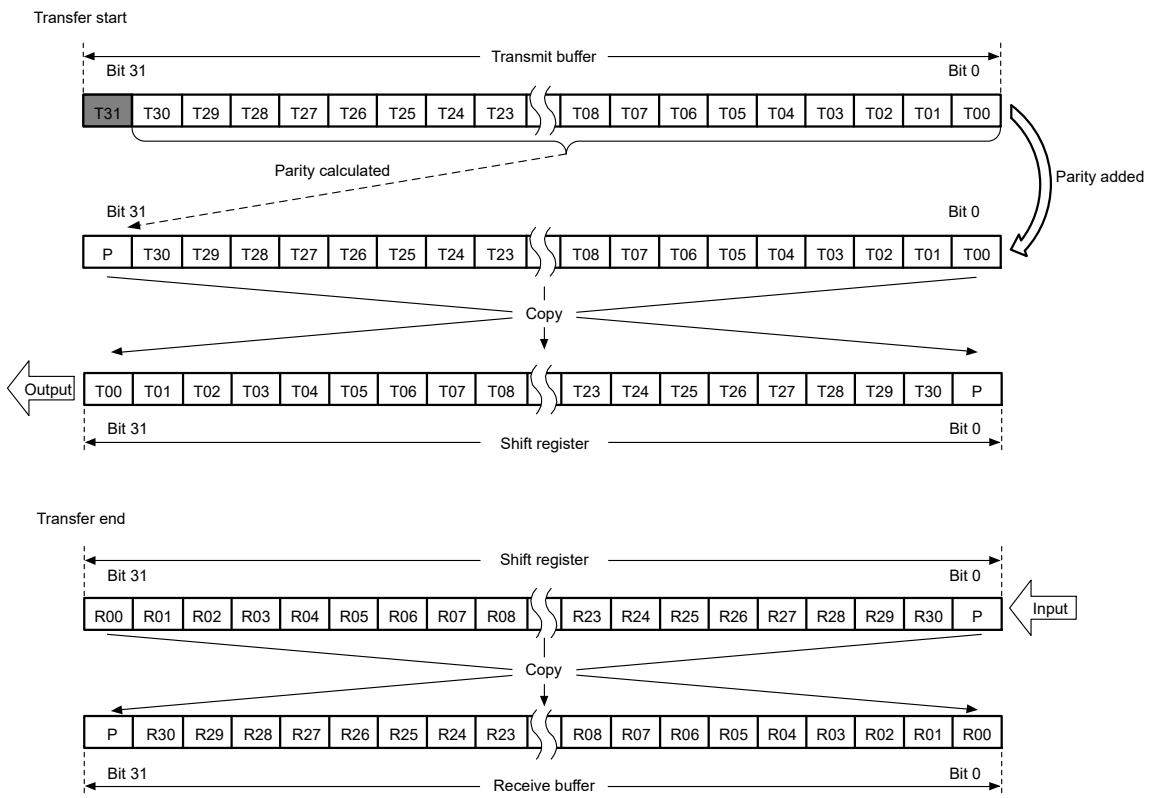

Note: Output = MOSI (master)/MISO (slave), input = MISO (master)/MOSI (slave)

Figure 31.20 LSB-first transfer with 32-bit data and parity enabled

(4) LSB-first transfer with 24-bit data

Figure 31.21 shows the operation of the SPI Data Register (SPDR) and the shift register in a transfer with parity enabled, a SPI data length of 24 bits, and LSB-first selected.

In transmission, the value of the parity bit (P) is calculated from bits T22 to T00. This replaces the final bit, T23, and the whole value is copied to the shift register. Data is transmitted in the order T00, T01, …, T22, and P.

In reception, received data is shifted in bit-by-bit through bit[8] of the shift register. When the R00 to P bits are collected after input of the required number of RSPCK cycles, the value in the shift register is copied to the receive buffer. On copying of data to the shift register, the data from R00 to P is checked for parity. The upper 8 bits of the transmit buffer is stored in the upper 8 bits of the receive buffer in case of transmit-receive operation. Writing 0 to T31 to T24 during transmission leads to 0 being inserted in the upper 8 bits of the receive buffer. On the other hand, the upper 8-bits of the receive buffer is written 0 in case of receive only operation.

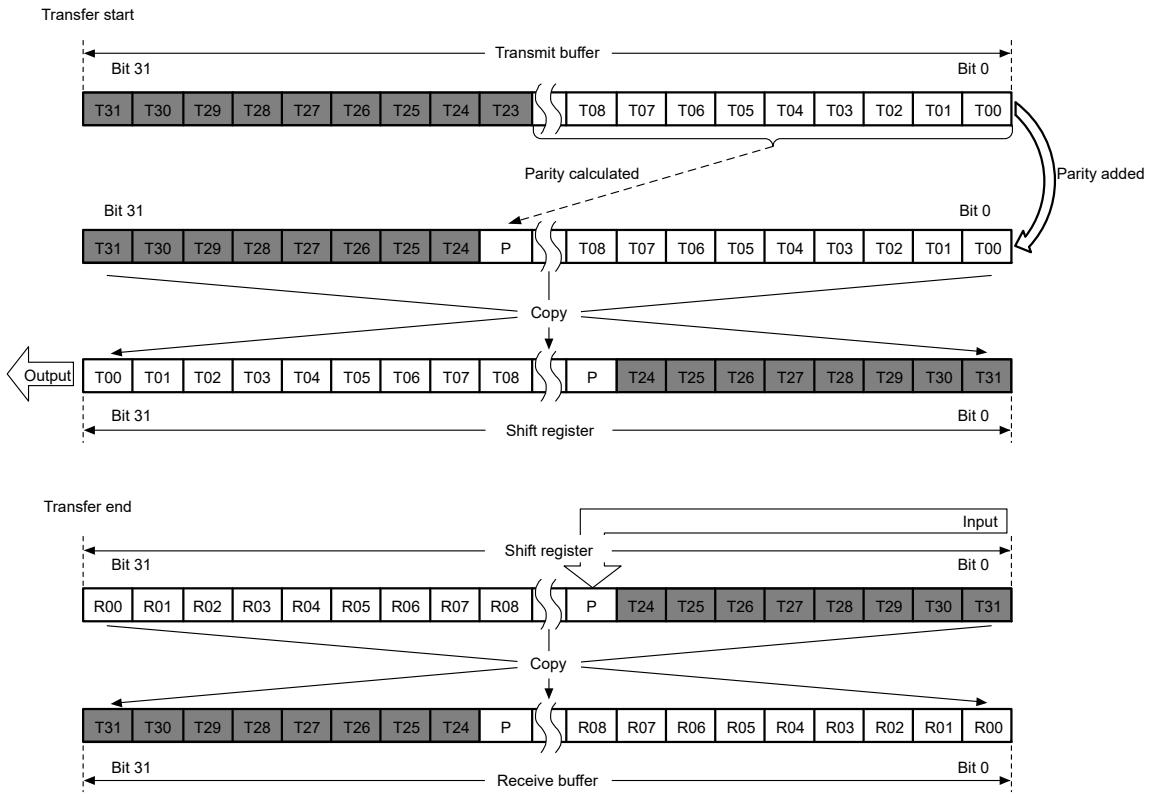

Note: Output = MOSI (master)/MISO (slave), input = MISO (master)/MOSI (slave)

Figure 31.21 LSB-first transfer with 24-bit data and parity enabled

31.3.4.3 Byte Swap Transmission

(1) MSB-first transfer. (When the byte swap is disabled.)

Data (Byte0 [T31 to T24] to Byte3 [T07 to T00]) in the transmit buffer are copied to the shift register.

Bit values in the shift register are shifted and transmitted in the order of T31 → T30 → … → T00 as transmit data.

(2) MSB-first transfer. (When the byte swap is enabled.)

Byte values of the transmit buffer (Byte0 [T31 to T24] to Byte3 [T07 to T00]) are reversed in byte units and are copied to the shift register in the order of Byte3 [T07 to T00] to Byte0 [T31 to T24].

Bit values in the shift register are shifted and transmitted in the order of T07 → T06 → … → T00 → T15 → T14 → … → T08 → T23 → T22 → … → T16 → T31 → T30 → … → T24 as transmit data.

(3) LSB-first transfer. (When the byte swap is disabled.)

Bit values of the transmit buffer (Byte0 [T31 to T24] to Byte3 [T07 to T00]) are reversed in bit units and are copied to the shift register in the order of Byte3 [T00 to T07] to Byte0 [T24 to T31].

Bit values in the shift register are shifted and transmitted in the order of T00 → T01 → … → T31 as transmit data.

(4) LSB-first transfer. (When the byte swap is enabled.)

Bit values of each byte of the transmit buffer (Byte0 [T31 to T24] to Byte3 [T07 to T00]) are reversed in bit units and are copied to the shift register in the order of Byte0 [T24 to T31] to Byte3 [T00 to T07].

Bit values in the shift register are shifted and transmitted in the order of T24 → T25 → … → T31 → T16 → T17 → … → T23 → T08 → T09 → … → T15 → T00 → T01 → … → T07 as transmit data.

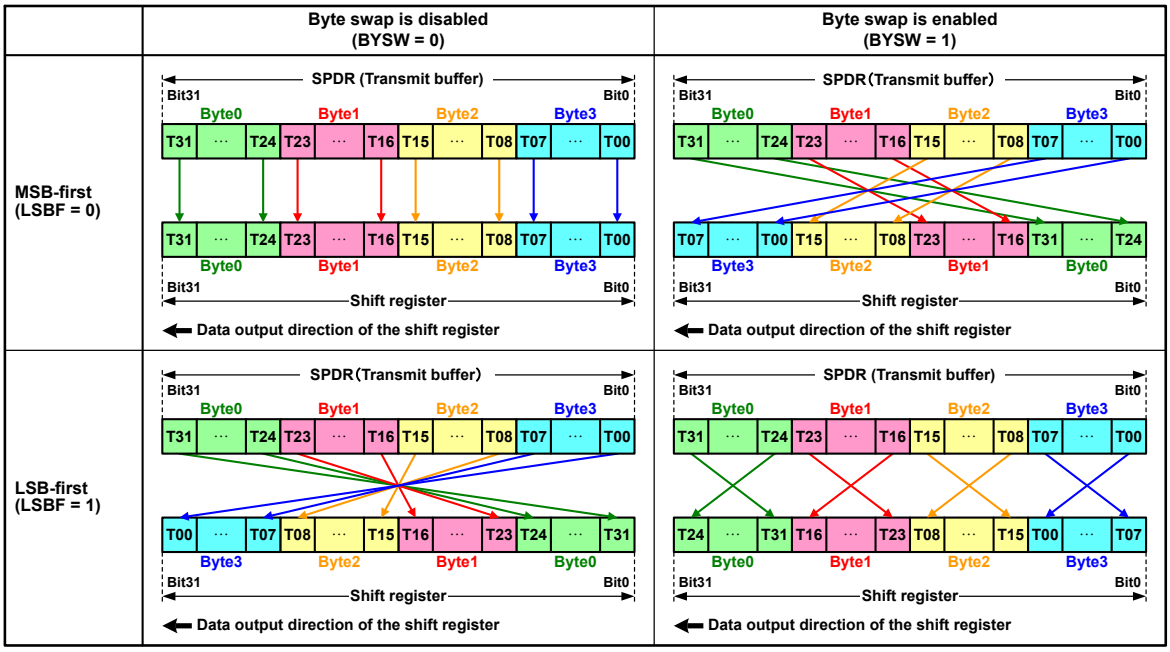

Note: 1. When using the byte swap, set 16 bits or 32 bits to the data length (SPCMD.SPB[3:0] setting). If setting the other length (8 to 15, 20, 24 bits), the behavior is not guaranteed.
2. When the byte swap is valid, set the parity function as invalid (SPCR2.SPPE bit = 0). If setting the parity function as valid (SPPE bit = 1), the behavior is not guaranteed.
3. Set SPDCR2.BYSW bit, when SPCR.SPE bit is 0. If rewriting BYSW bit, when SPE bit is 1, the behavior after it is not guaranteed.

Figure 31.22 Byte swap with MSB/LSB transfer

31.3.4.4 Byte Swap Reception

(1) MSB-first transfer. (When the byte swap is disabled.)

The first received data (R31) is stored in bit 0 of the shift register, and received data is shifted in the order of R31 → R30 → … → R00.

When necessary RSPCK cycles are input and data is stored from Byte0 [R31 to R24] to Byte3 [R07 to R00], the shift register value is copied to the receive buffer.

(2) MSB-first transfer. (When the byte swap is enabled.)

The first received data (R07) is stored in bit 0 of the shift register, and received data is shifted in the order of R07 → R06 → … → R00 → R15 → R14 → … → R08 → R23 → R22 → … → R16 → R31 → R30 → … → R24.

When necessary RSPCK cycles are input and data is stored from Byte3 [R07 to R00] to Byte0 [R31 to R24], byte values in the shift register are reversed in byte units and are copied to the receive buffer in the order of Byte0 [R31 to R24] to Byte3 [R07 to R00].

(3) LSB-first transfer. (When the byte swap is disabled.)

The first received data (R00) is stored in bit 0 of the shift register, and received data is shifted in the order of R00 → R01 → … → R31.

When necessary RSPCK cycles are input and data is stored from Byte3 [R00 to R07] to Byte0 [R24 to R31], bit values in the shift register are reversed in bit units and are copied to the receive buffer in the order of Byte0 [R31 to R24] to Byte3 [R07 to R00].

(4) LSB-first transfer. (When the byte swap is enabled.)

The first received data (R24) is stored in bit 0 of the shift register, and received data is shifted in the order of R24 → R25 → … → R31 → R16 → R17 → … → R23 → R08 → R09 → … → R15 → R00 → R01 → … → R07.

When necessary RSPCK cycles are input and data is stored from Byte0 [R24 to R31] to Byte3 [R00 to R07], bit values of each byte in the shift register are reversed in bit units and are copied to the receive buffer in the order of Byte0 [R31 to R24] to Byte3 [R07 to R00].

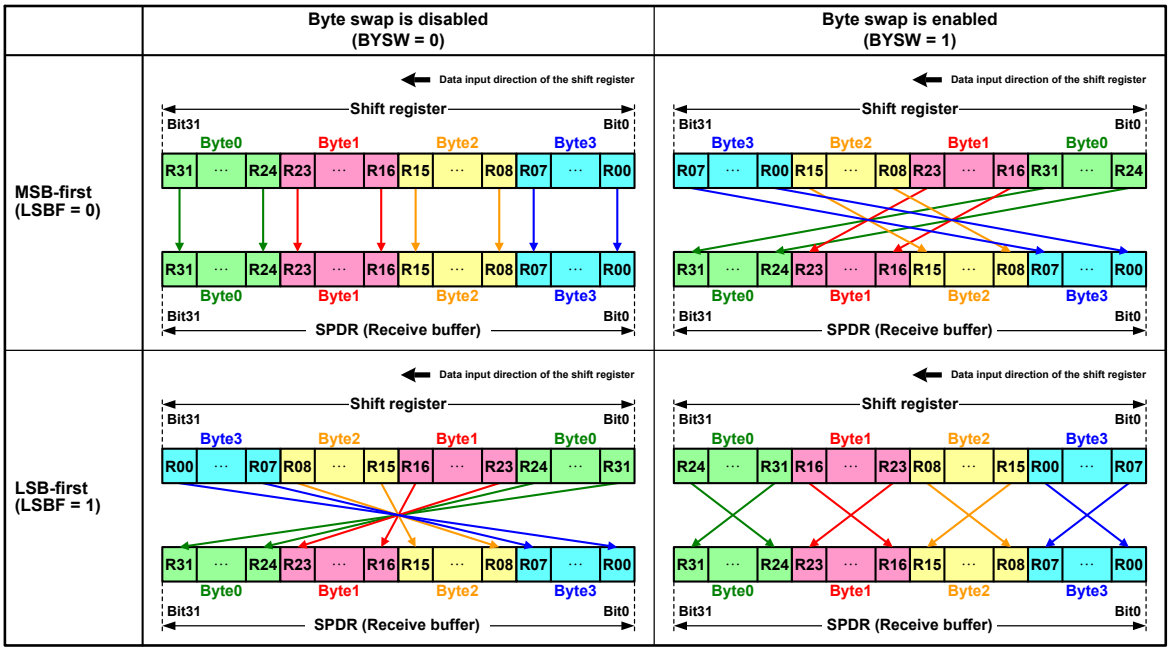

Note: 1. When using the byte swap, set 16 bits or 32 bits to the data length (SPCMD.SPB[3:0] setting). If setting the other length (8 to 15, 20, 24 bits), the behavior is not guaranteed.
2. When the byte swap is valid, set the parity function as invalid (SPCR2.SPPE bit = 0). If setting the parity function as valid (SPPE bit = 1), the behavior is not guaranteed.
3. Set SPDCR2.BYSW bit, when SPCR.SPE bit is 0. If rewriting BYSW bit, when SPE bit is 1, the behavior after it is not guaranteed.

Figure 31.23 Byte swap with MSB/LSB transfer

31.3.5 Transfer Formats

31.3.5.1 When CPHA = 0

Figure 31.24 shows an example transfer format for the serial transfer of 8-bit data when the SPCMDm.CPHA bit is 0. Do not perform clock synchronous operation (SPCR.SPMS = 1) when the SPI operates in slave mode (SPCR.MSTR = 0) and the CPHA bit is 0. In Figure 31.24, RSPCKn (CPOL = 0) indicates the RSPCKn signal waveform when the SPCMDm.CPOL bit is 0, and RSPCKn (CPOL = 1) indicates the RSPCKn signal waveform when the CPOL bit is 1. The sampling timing represents the timing at which the SPI fetches serial transfer data into the shift register. The I/O directions of the signals depend on the SPI settings. For details, see section 31.3.2. Controlling the SPI Pins.

When the SPCMDm.CPHA bit is 0, the driving of valid data to the MOSIn and MISOn signals begins at an SSLni signal assertion. The first RSPCKn signal change that occurs after the SSLni signal assertion becomes the first transfer data fetch. After this, data is sampled every 1 RSPCKn cycle. The change timing for MOSIn and MISOn signals is 1/2 RSPCK cycles after the transfer data fetch timing. The CPOL bit setting does not affect the RSPCK signal operation timing as it only affects the signal polarity.

t1 denotes the RSPCK delay, the period from an SSLni signal assertion to RSPCKn oscillation. t2 denotes the SSL negation delay, the period from the termination of RSPCKn oscillation to an SSLni signal negation. t3 denotes the next-access delay,

the period in which SSLni signal assertion is suppressed for the next transfer after the end of serial transfer. t1, t2, and t3 are controlled by a master device running on the SPI system. For a description of t1, t2, and t3 when the SPI is in master mode, see section 31.3.12.1. Master mode operation.

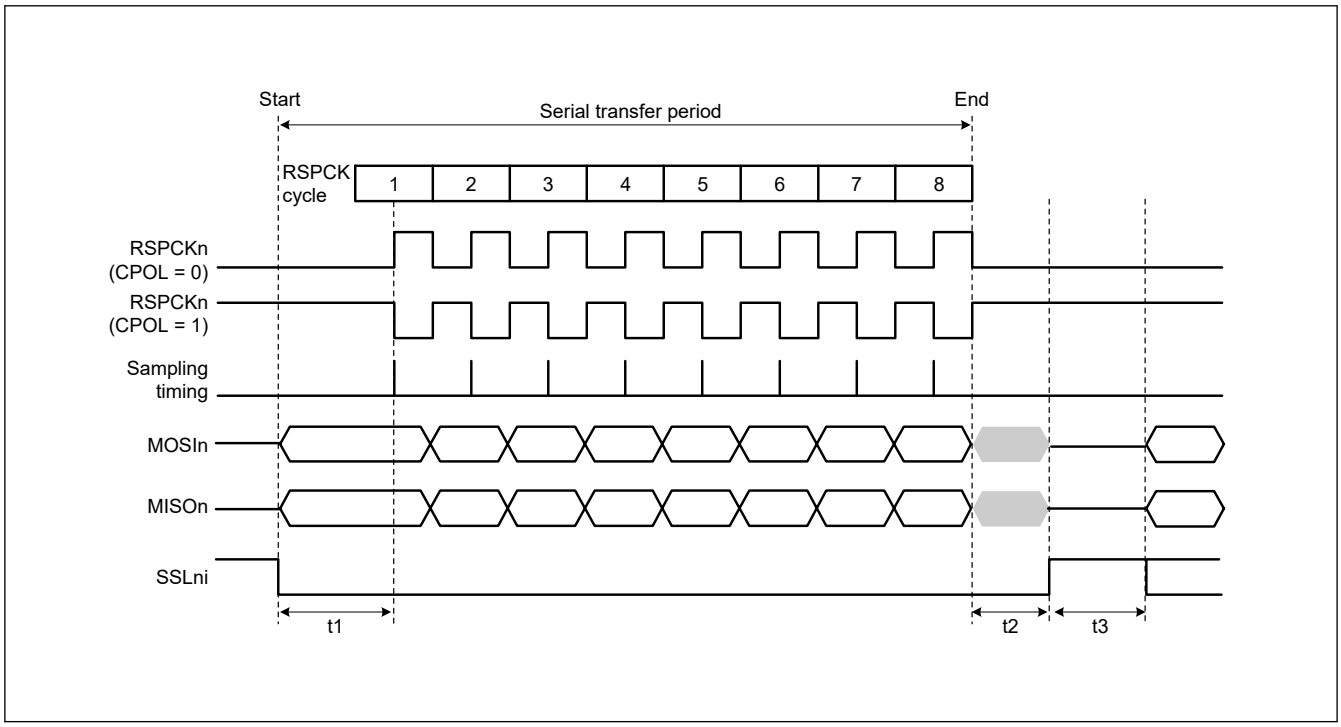

Figure 31.24 SPI transfer format when CPHA = 0

31.3.5.2 When CPHA = 1

Figure 31.25 shows an example transfer format for the serial transfer of 8-bit data when the SPCMDm.CPHA bit is 1. However, when the SPCR.SPMS bit is 1, the SSLni signals are not used, and only the three signals RSPCKn, MOSIn, and MISOn handle communications. In Figure 31.25, RSPCK (CPOL = 0) indicates the RSPCKn signal waveform when the SPCMDm.CPOL bit is 0 and RSPCK (CPOL = 1) indicates the RSPCKn signal waveform when the CPOL bit is 1. The sampling timing represents the timing at which the SPI fetches serial transfer data into the shift register. The I/O directions of the signals depend on the SPI mode (master or slave mode). For details, see section 31.3.2. Controlling the SPI Pins.

When the SPCMDm.CPHA bit is 1, the driving of invalid data to the MISOn signal begins at an SSLni signal assertion. The output of valid data to the MOSIn and MISOn signals begins at the first RSPCKn signal change that occurs after the SSLni signal assertion. After this, data is updated every 1 RSPCK cycle. The transfer data fetch timing is 1/2 RSPCK cycles after the data update timing. The SPCMDm.CPOL bit setting does not affect the RSPCKn signal operation timing. It only affects the signal polarity.

t1, t2, and t3 are the same as those when CPHA = 0. For a description of t1, t2, and t3 when the SPI of the MCU is in master mode, see section 31.3.12.1. Master mode operation.

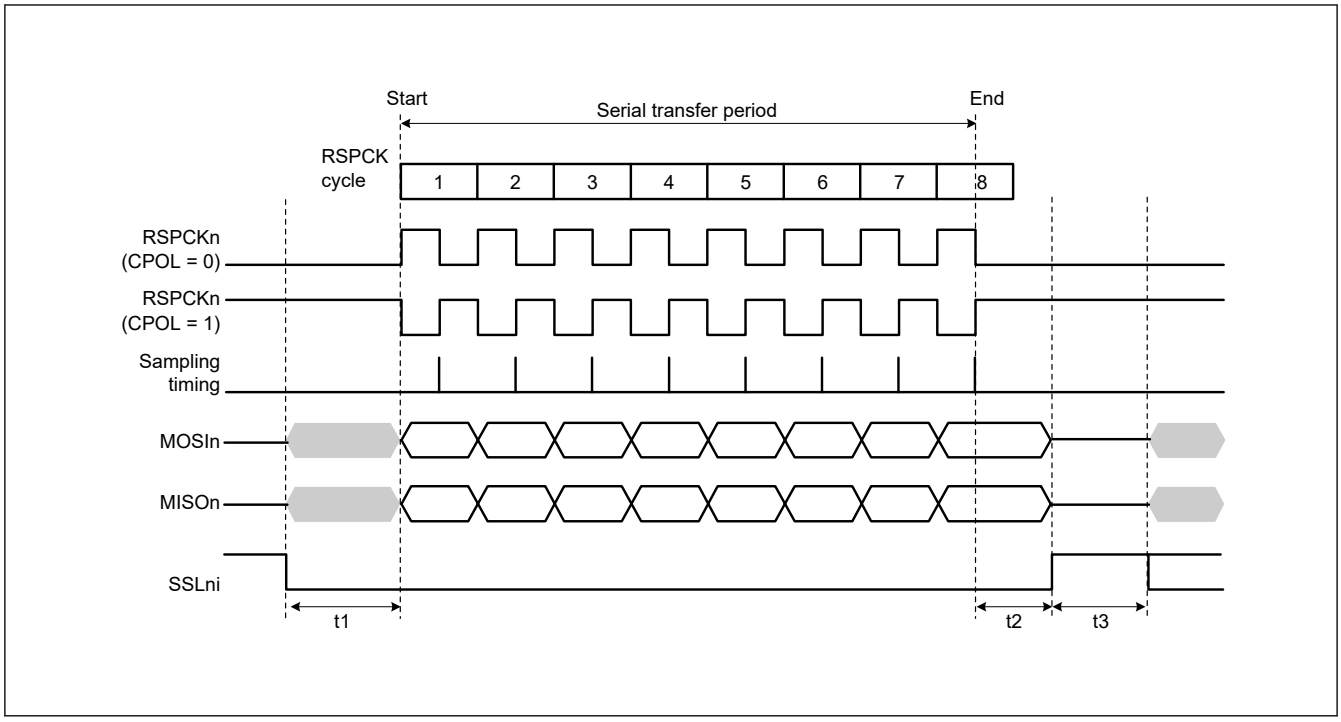

Figure 31.25 SPI transfer format when CPHA = 1

31.3.6 Data Transfer Modes

Full-duplex synchronous serial communications or transmit operations can only be selected in the Communications Operating Mode Select bit (SPCR.TXMD) when the extended communication mode select bit (ETXMD) in the SPI control register 3 (SPCR3) is 0. The SPI operation is receive only in slave mode (SPCR.MSTR = 0) when the SPCR3.ETXMD bit is 1, because SPCR.TXMD bit does not affect the SPI operation. The register accesses shown in Figure 31.26, Figure 31.27, and Figure 31.28 indicate the condition of access to the SPDR/SPDR_HA register, where W denotes a write cycle.

31.3.6.1 Full-duplex synchronous serial communications (SPCR3.ETXMD = 0, SPCR.TXMD = 0)

Figure 31.26 shows an example of operation when the extended communication mode select bit (ETXMD) in the SPI control register 3 (SPCR3) is set to 0 and the Communications Operating Mode Select bit (SPCR.TXMD) is set to 0. In this example, the SPI performs an 8-bit serial transfer when SPDCR.SPFC[1:0] bits are 00b, the SPCMDm.CPHA bit is 1, and the SPCMDm.CPOL bit is 0. The numbers given for RSPCKn in the waveform represent the number of RSPCK cycles, such as the number of transferred bits.

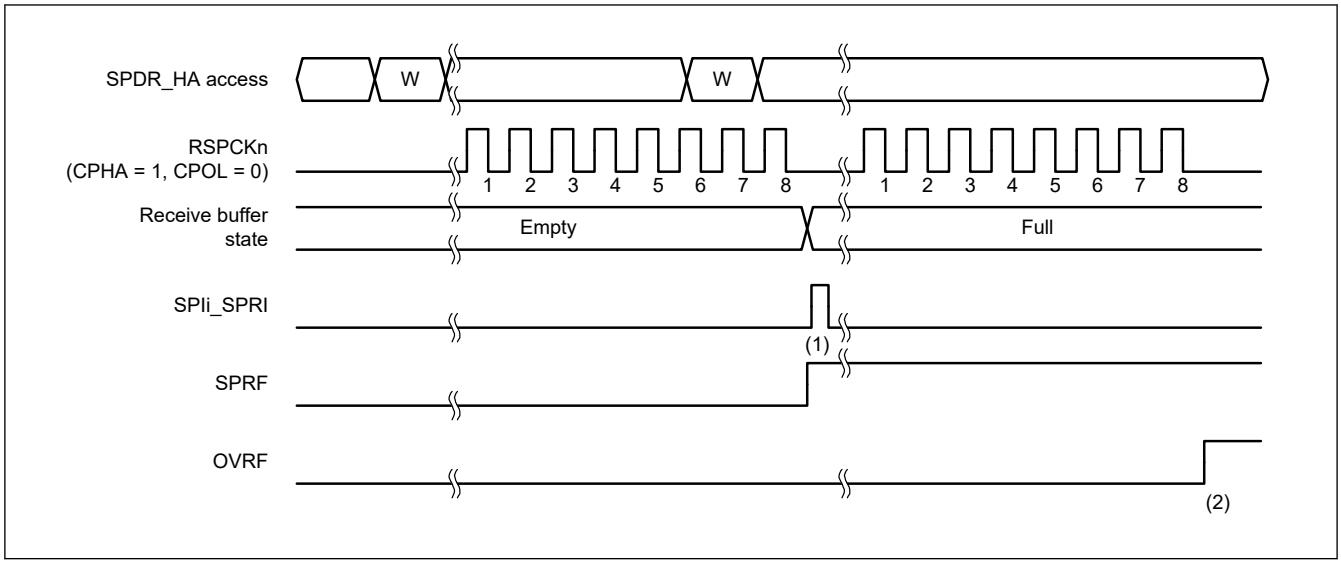

Figure 31.26 Operation example when SPCR3.ETXMD = 0 and SPCR.TXMD = 0

The operation of the flags at timings (1) and (2) in Figure 31.26 is as follows:

1. When a serial transfer ends with the receive buffer of SPDR_HA empty, the SPI generates a receive buffer full interrupt request (SPIi_SPRI), the SPI sets the SPSR.SPRF flag to 1, and copies the received data in the shift register to the receive buffer.
2. When a serial transfer ends with the receive buffer of SPDR_HA holding data that was received in the previous serial transfer, the SPI sets the SPSR.OVRF flag to 1, and discards the received data in the shift register. For details about the operation of the SPSR.OVRF flag, see section 31.3.10.1. Overrun errors.

31.3.6.2 Transmit-Only Serial Communications (SPCR3.ETXMD = 0, SPCR.TXMD = 1)

Figure 31.27 shows an example of operation when the extended communication mode select bit (ETXMD) in the SPI control register 3 (SPCR3) is set to 0 and the Communications Operating Mode Select bit (SPCR.TXMD) is set to 1. In this example, the SPI performs an 8-bit serial transfer when SPDCR.SPFC[1:0] bits are 00b, the SPCMDm.CPHA bit is 1, and the SPCMDm.CPOL bit is 0. The numbers given for RSPCKn in the waveform represent the number of RSPCK cycles, such as the number of transferred bits.

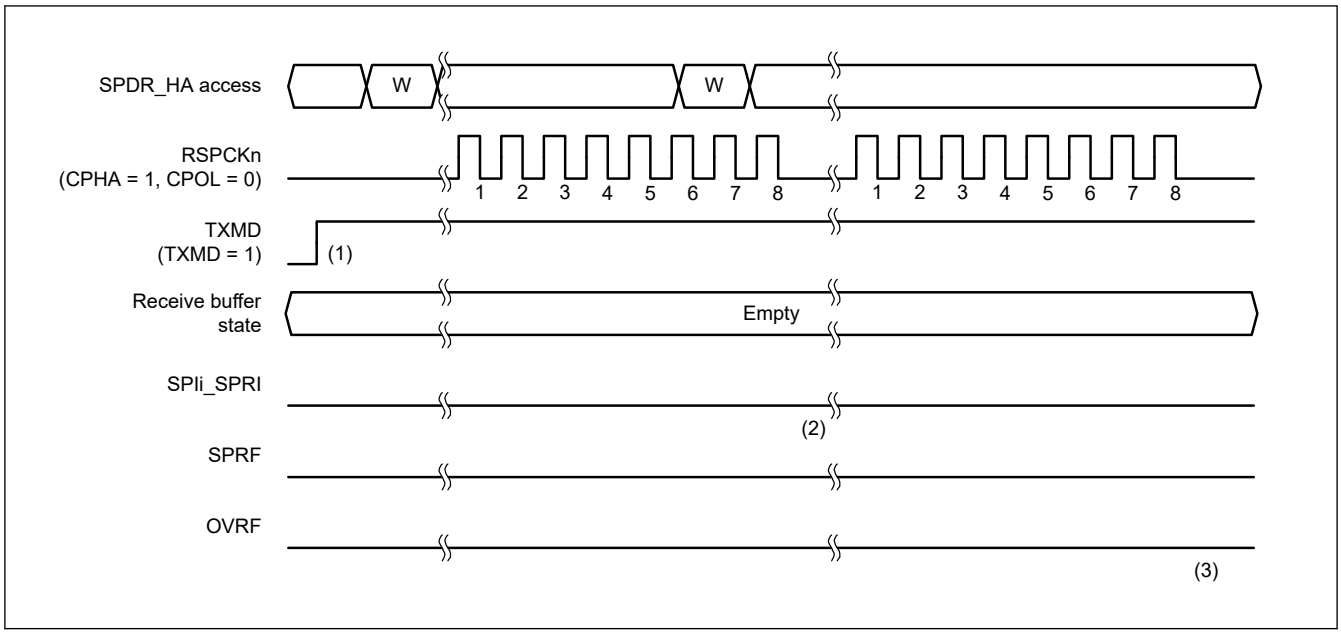

Figure 31.27 Operation example when SPCR3.ETXMD = 0 and SPCR.TXMD = 1

The operation of the flags at timings (1) to (3) in Figure 31.27 is as follows:

1. Make sure there is no data left in the receive buffer (the SPSR.SPRF flag is 0) and the SPSR.OVRF flag is 0 before entering transmit-only mode (SPCR3.ETXMD = 0, SPCR.TXMD = 1).
2. When a serial transfer ends with the receive buffer of SPDR_HA empty, if the transmit-only mode is selected (SPCR3.ETXMD = 0, SPCR.TXMD = 1), the SPSR.SPRF flag retains the value of 0, and the SPI does not copy the data in the shift register to the receive buffer.
3. Because the receive buffer of SPDR_HA does not hold data that was received in the previous serial transfer, even when a serial transfer ends, the SPSR.OVRF flag retains the value of 0, and the data in the shift register is not copied to the receive buffer.

In transmit-only mode (SPCR3.ETXMD = 0, SPCR.TXMD = 1), the SPI transmits data but does not receive data. Therefore, the SPSR.SPRF and SPSR.OVRF flags remain 0 at timings (1) to (3).

31.3.6.3 Receive-Only Serial Communication (MSTR = 0, ETXMD = 1)

Figure 31.28 shows an example of operation when the SPI master/slave mode select bit (MSTR) in the SPI control register (SPCR) is set to 0 and the extended communication mode select bit (ETXMD) in the SPI control register 3 (SPCR3) is set to 1. In the example in Figure 31.28, the SPI performs 8-bit data serial transfer with the settings of SPFC[1:0] in the SPI data control register (SPDCR) = 00b, CPHA in the SPI command register (SPCMD) = 1, and CPOL in SPCMD = 0. Numbers under the RSPCK waveform show the number of RSPCK cycles (number of transfer bits).

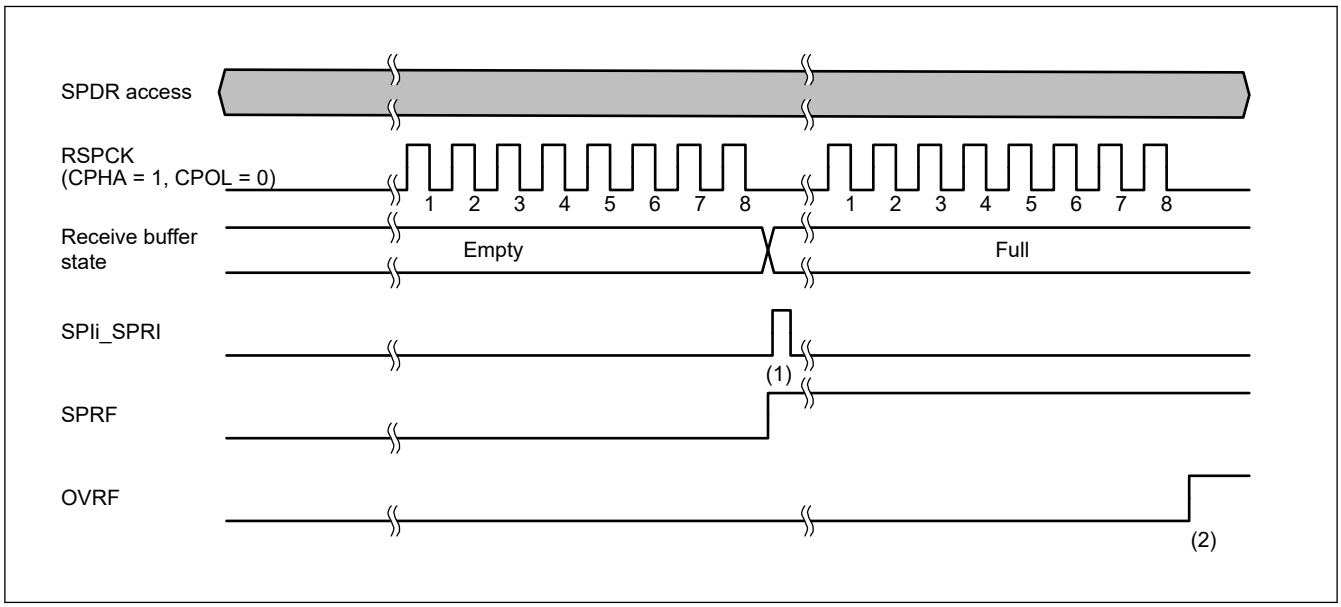

Figure 31.28 Example of Operation when MSTR = 0 and ETXMD = 1

The following describes operation of flags at timings (1) and (2) in the figure above.

(1) When serial transfer ends while the SPDR's receive buffer is empty, the SPI generates a receive buffer full interrupt request SPIi_SPRI (setting the SPSR.SPRF flag to 1) and copies the received data in the shift register to the receive buffer

(2) When serial transfer ends while previously received data is remaining in the SPDR's receive buffer, the SPI sets the OVRF flag in the SPI status register (SPSR) to 1 and discards the received data in the shift register.

31.3.7 Transmit Buffer Empty and Receive Buffer Full Interrupts

Figure 31.29 and Figure 31.30 show examples of operation of the transmit buffer empty interrupt (SPIi_SPTI) and the receive buffer full interrupt (SPIi_SPRI). The SPDR_HA register accesses shown in these figures indicate the conditions of access to the register, where W denotes a write cycle and R a read cycle. In Figure 31.29, the SPI performs an 8-bit serial transfer when SPCR.TXMD bit is 0, the SPDCR.SPFC[1:0] bits are 00b, the SPCMDm.CPHA bit is 0, and the SPCMDm.CPOL bit is 0. In Figure 31.30, the SPI performs an 8-bit serial transfer when SPCR.TXMD bit is 0, the SPDCR.SPFC[1:0] bits are 00b, the SPCMDm.CPHA bit is 1, and the SPCMDm.CPOL bit is 0. The numbers given for RSPCKn in the waveform represent the number of RSPCK cycles, such as the number of transferred bits.

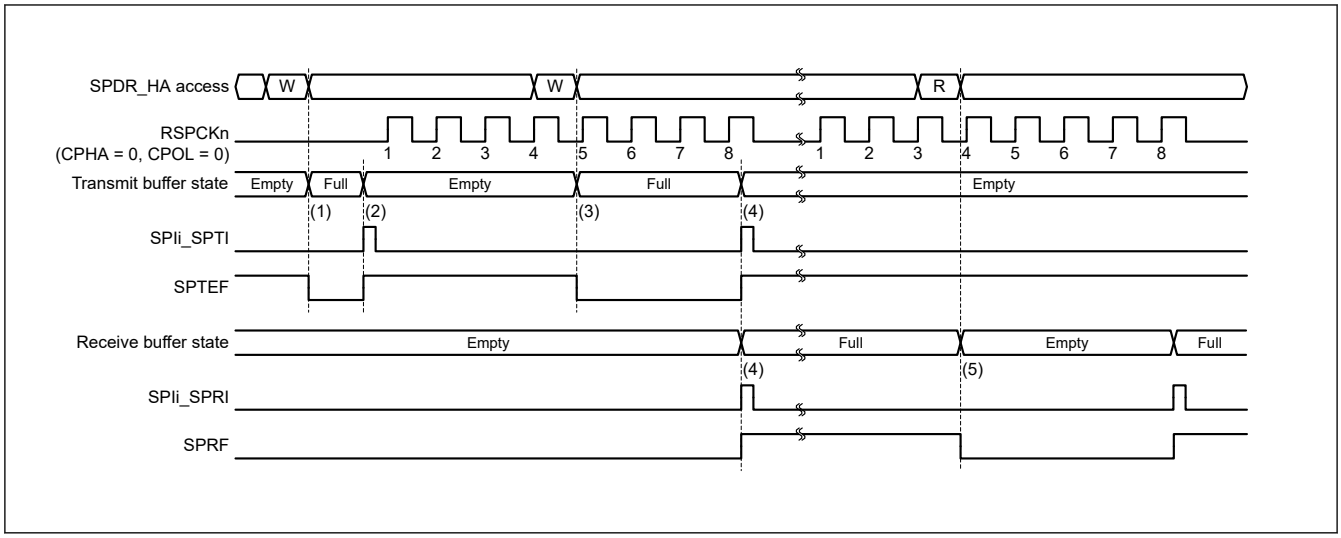

Figure 31.29 Operation example of the SPIi_SPTI and SPIi_SPRI interrupts when CPHA = 0 and CPOL = 0 in master mode

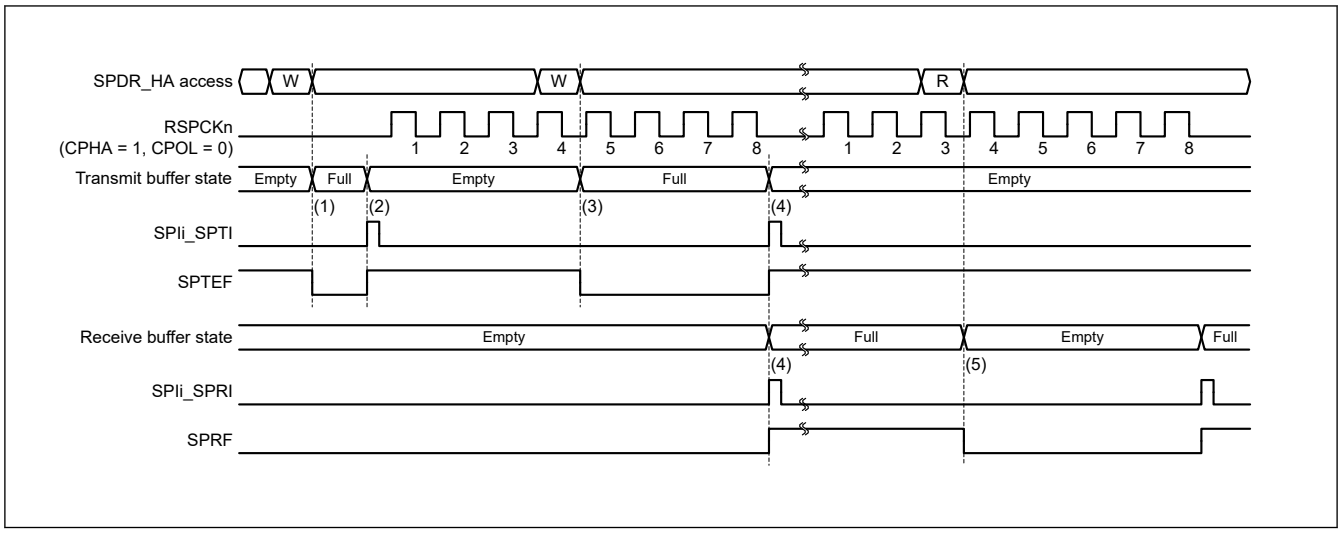

Figure 31.30 Operation example of the SPIi_SPTI and SPIi_SPRI interrupts when CPHA = 1 and CPOL = 0 in master mode

The operation of the SPI at timings (1) to (5) in Figure 31.29 and Figure 31.30 is as follows:

1. When transmit data is written to SPDR_HA with the transmit buffer of SPDR_HA is empty and data for the next transfer is not set, the SPI writes data to the transmit buffer and clears the SPSR.SPTEF flag to 0.
2. If the shift register is empty, the SPI copies the data in the transmit buffer to the shift register, generates a transmit buffer empty interrupt request (SPIi_SPTI), and sets the SPSR.SPTEF flag to 1. How a serial transfer is started depends on the SPI mode. For details, see section 31.3. Operation, and section 31.3.13. Clock Synchronous Operation.
3. When transmit data is written to SPDR_HA either by the transmit buffer empty interrupt routine, or by the processing of the transmit buffer empty using the SPTEF flag, the SPI writes data to the transmit buffer and clears the SPTEF flag to 0. Because the data being transferred serially is stored in the shift register, the SPI does not copy the data in the transmit buffer to the shift register.
4. When the serial transfer ends with the receive buffer of SPDR_HA empty, the SPI copies the receive data in the shift register to the receive buffer, generates a receive buffer full interrupt request (SPIi_SPRI), and sets the SPRF flag to 1. Because the shift register becomes empty on completion of the serial transfer, if the transmit buffer is full before the serial transfer ended, the SPI sets the SPTEF flag to 1 and copies data in the transmit buffer to the shift register. Even when received data is not copied from the shift register to the receive buffer in an overrun error status, on completion of the serial transfer, the SPI determines that the shift register is empty, so data transfer from the transmit buffer to the shift register is enabled.

5. When SPDR_HA is read either by the receive buffer full interrupt routine or processing of the receive buffer full interrupt using the SPRF flag, the receive data can be read.

If SPDR_HA is written to when the transmit buffer holds data that is not yet transmitted (the SPTEF flag is 0), the SPI does not update data in the transmit buffer. When writing to SPDR_HA, always use either a transmit buffer empty interrupt request or processing of the transmit buffer empty interrupt using the SPTEF flag. To use a transmit buffer empty interrupt, set the SPTIE bit in SPCR to 1. If the SPI function is disabled (the SPCR.SPE bit is 0), set the SPTIE bit to 0.

When serial transfer ends and the receive buffer is full (the SPRF flag is 1), the SPI does not copy data from the shift register to the receive buffer, and it detects an overrun error (see section 31.3.10. Error Detection). To prevent a receive data overrun error, read the received data using a receive buffer full interrupt request before the next serial transfer ends. To use an SPI receive buffer full interrupt, set the SPCR.SPRIE bit to 1.

Transmission and reception interrupts or the associated IELSRn.IR flags (where n is the interrupt vector number) in the ICU can be used to confirm the states of the transmit and receive buffers.

Similarly, the SPTEF and SPRF flags can be used to confirm the states of the transmit and receive buffers. See section 12, Interrupt Controller Unit (ICU) for the interrupt vector numbers.

31.3.8 Idle Interrupt

When the SPCP[2:0] of the SPI Status Register (SPSR) becomes 000b (start of sequence control), the IDLNF flag in the SPI Status Register (SPSR) is set to 1 and an idle interrupt request is made during master mode operation. An interrupt request is also made by clearing the SPCR.SPE bit to 0.

[In master mode]

Figure 31.31 shows an example of idle interrupt operation during normal operation.

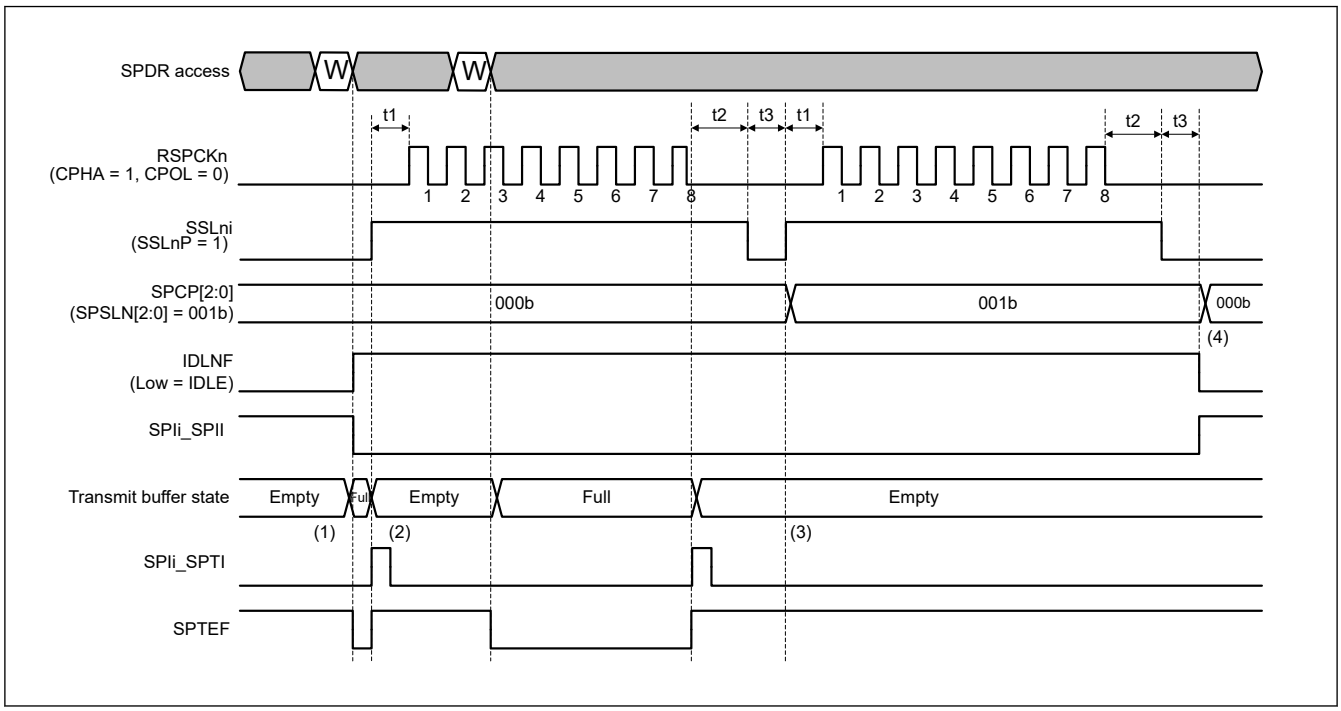

Figure 31.31 Example of idle interrupt operation (master mode)

1. At the start of transmission, if the next transfer data is not set in the transmission buffer, the IDLNF flag is 0 (IDLE). Writing transmit data sets the IDLNF flag to 1 (BUSY). When the SPIIE bit in the SPI Control Register 2 (SPCR2) is set to 1 before transmit data is written, interrupt processing is required before transmission start. For this reason, set the SPIIE bit to 0 before starting transmission.
2. After transmission has started, the IDLNF flag remains 1 (BUSY) regardless of the transmit buffer state.
3. The SPCP[2:0] bits change the command to the next command at the end of t3 cycle. When the next command is not 000b, the IDLNF flag remains unchanged even when the next transmit data has not been written.

4. The IDLNF flag is cleared to 0 (IDLE) at the end of t3 cycle because the next command is 000b and the next transmit data is not present. When the SPIIE bit is 1, an SPIi_SPII interrupt is output.

[In slave mode]

An idle interrupt during slave mode operation depends only on the set SPCR.SPE bit value.

Figure 31.32 shows an example of idle interrupt operation during slave mode operation.

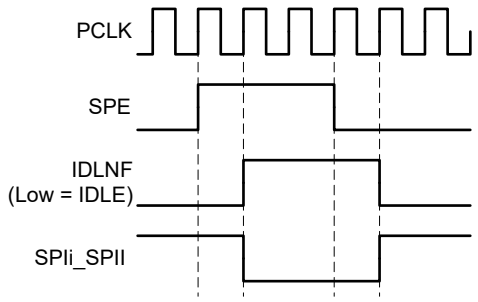

Note: PCLK = PCLKA

Figure 31.32 Example of idle interrupt operation (slave mode)

31.3.9 Communication End Interrupt

31.3.9.1 Transmit-Receive/Transmit in Master Mode

The communication end interrupt (SPIi_SPCEND) is made and the CENDF flag is set to 1, when following conditions are satisfied in transmit-receive master mode and transmit master mode. The set timing of the CENDF flag is same as IDLNF flag. The communication end interrupt (SPIi_SPCEND) is one PCLKA width and low active.

- When the value of the SPSSR.SPCP[2:0] bits are same as the SPSCR.SPSLN[2:0] bits.
- When there is no next transmission data.

The CENDF flag will not be cleared even if the SPCR.SPE bit is cleared after CENDF = 1. The CENDF flag will be cleared in one of following two conditions.

- When the next transmission data is written to the transmit buffer (SPTX).
- The CENDF flag was written 0 after reading the SPSR when the CENDF flag was 1.

Figure 31.33 shows an example of communication end interrupt operation during transmit-receive/transmit master mode.

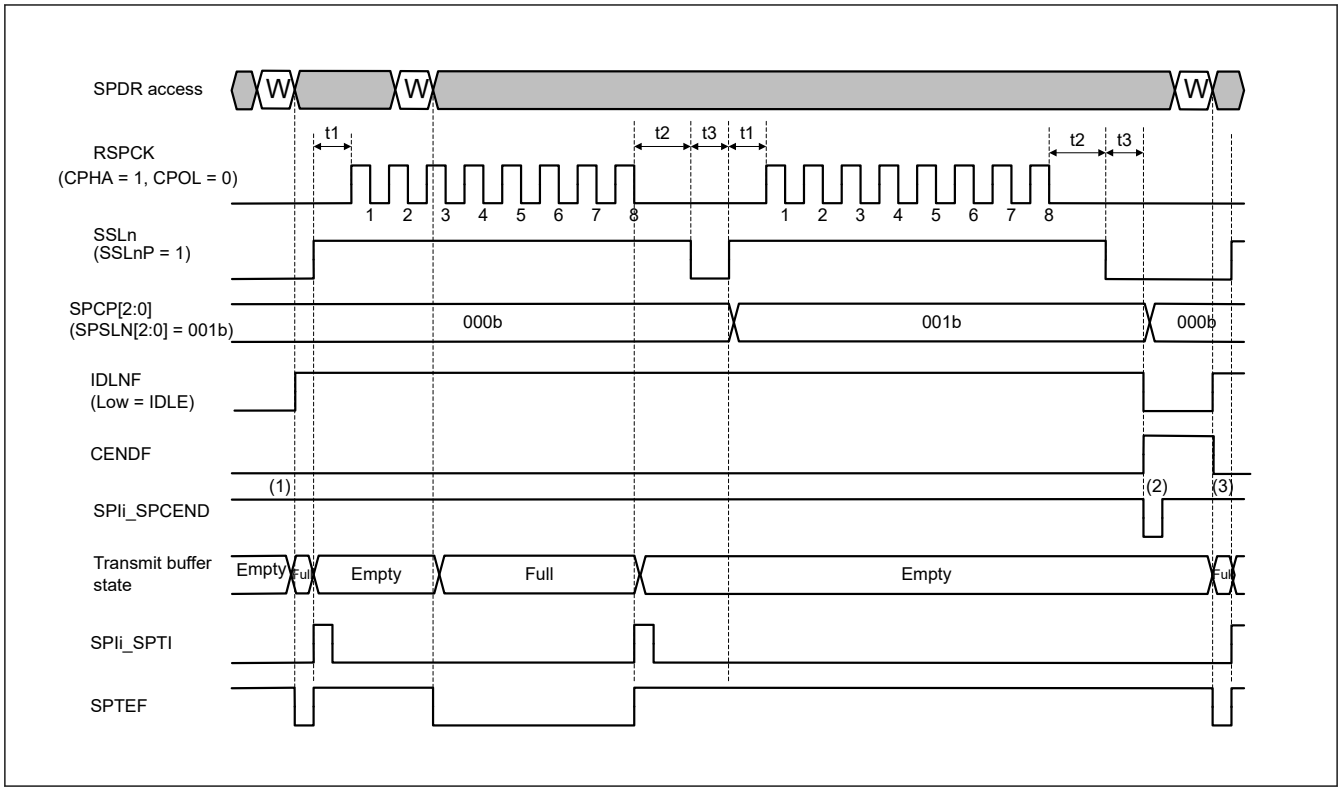

Figure 31.33 Example of Communication End Interrupt Operation (Transmit-Receive/Transmit Master mode)

1. The CNEDF flag is 0 and the level of SPIi_SPCEND is 1 before communication start, and these have kept during communication.
2. The CENDF flag will be 1 (Communication End) at the end of t3 cycle, because the next command is 000b and there is no next transmit data, and then the SPIi_SPCEND interrupt output when the CENDIE bit is 1.
3. The CENDF flag is cleared when the next transmission data is written to the transmit buffer (SPTX). Or the CENDF flag is cleared if the CENDF flag was written 0 after reading the SPCR when the CENDF flag was 1.

In slave mode operation, the output timing of the communication end interrupt is deferent due to the value of the SPCR.SPMS bit (SPI mode select bit), and the clear timing of the communication end interrupt is deferent due to the communication mode (transmit-receive or transmit-only or receive-only).

31.3.9.2 Transmit-Receive/Transmit in Slave Mode on SPI Operation (4-wire)

The communication end interrupt (SPIi_SPCEND) is made and the CENDF flag is set to 1, when both SPTX buffer and transmit shift buffer are empty in transmit-receive/transmit slave mode on SPI Operation (4-wire). The set timing of the CENDF flag is same as SSL0 negate timing. The communication end interrupt (SPIi_SPCEND) is one PCLKA width and low active.

The CENDF flag will not be cleared even if the SPCR.SPE bit is cleared after CENDF = 1. The CENDF flag will be cleared in one of following two conditions.

- When the next transmission data is written to the transmit buffer (SPTX).
- The CENDF flag was written 0 after reading the SPSR when the CENDF flag was 1.

Figure 31.34 shows an example of communication end interrupt operation during transmit-receive/transmit slave mode on SPI operation.

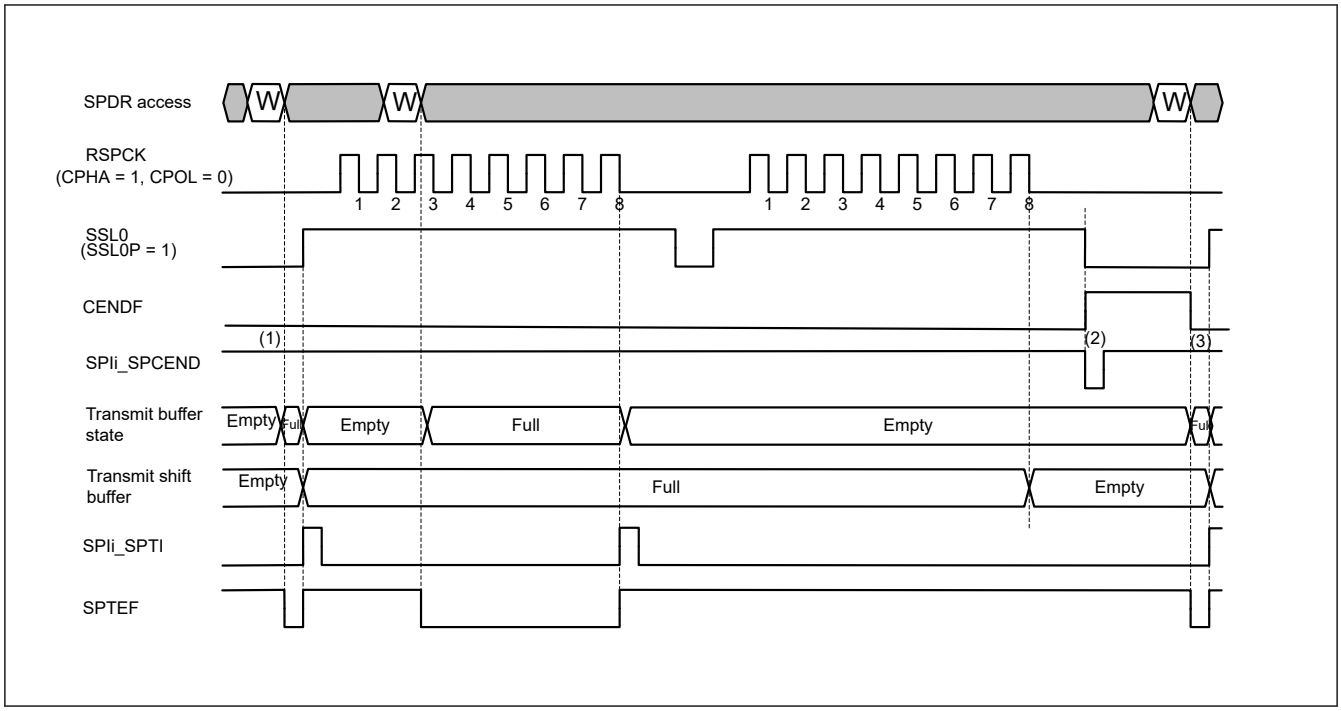

Figure 31.34 Example of Communication End Interrupt Operation (Transmit-Receive/Transmit Slave mode on SPI Operation)

1. The CNEDF flag is 0 and the level of SPIi_SPCEND is 1 before communication start, and these have kept during communication.
2. The CENDF flag will be 1 (Communication End) at the timing of SSL0 negate, when both SPTX buffer and transmit shift buffer are empty, and then the SPIi_SPCEND interrupt output when the CENDIE bit is 1.
3. The CENDF flag is cleared when the next transmission data is written to the transmit buffer (SPTX). Or the CENDF flag is cleared if the CENDF flag was written 0 after reading the SPCR when the CENDF flag was 1.

31.3.9.3 Receive Only in Slave Mode on SPI Operation (4-wire)

The communication end interrupt (SPIi_SPCEND) is made and the CENDF flag is set to 1 at the SSL0 negate timing in receive only slave mode on SPI operation (4-wire). The number of transmission frame is set by the SPDCR.SPFC[1:0]. Then the SSL0 is negated at the last frame transmission end. The communication end interrupt (SPIi_SPCEND) is one PCLKA width and low active.

The CENDF flag will not be cleared even if the SPCR.SPE bit is cleared after CENDF = 1. The CENDF flag will be cleared in one of following two conditions.

- The SSL0 assert timing of next transmission.
- The CENDF flag was written 0 after reading the SPSR when the CENDF flag was 1.

Figure 31.35 shows an example of communication end interrupt operation during receive only slave mode on SPI operation (4-wire).

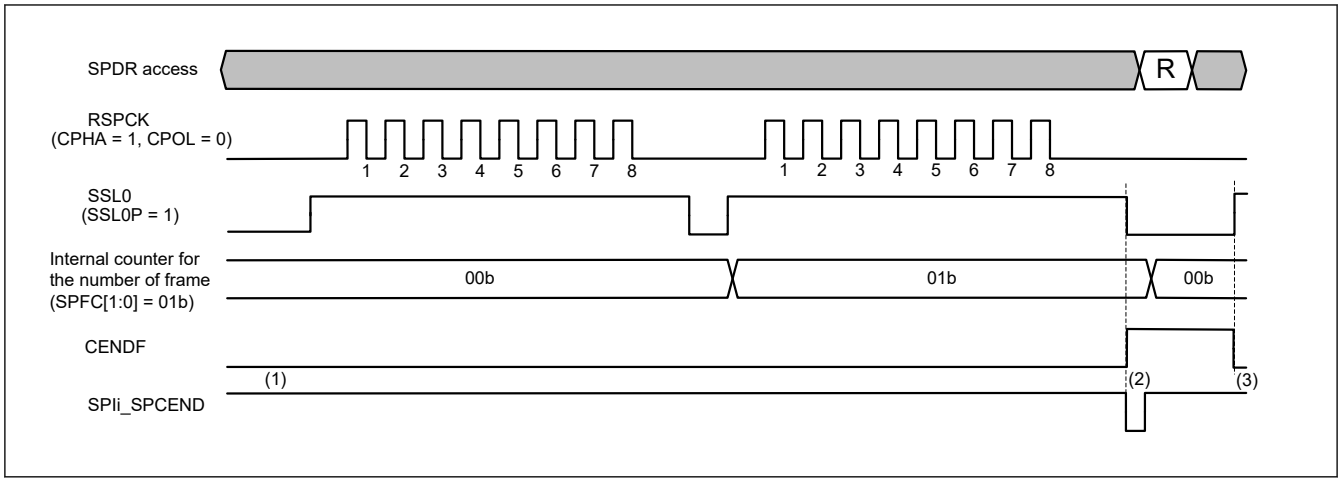

Figure 31.35 Example of Communication End Interrupt Operation (Receive only Slave mode on SPI Operation)

1. The CNEDF flag is 0 and the level of SPIi_SPCEND is 1 before communication start, and these have kept during communication.
2. The CENDF flag will be 1 (Communication End) at the timing of SSL0 negate, when the last frame transmission ends, and then the SPIi_SPCEND interrupt output when the CENDIE bit is 1.
3. The CENDF flag is cleared at the SSL0 assert when the next transmission start. Or the CENDF flag is cleared if the CENDF flag was written 0 after reading the SPCR when the CENDF flag was 1.

31.3.9.4 Transmit-Receive/Transmit in Slave Mode on Clock Synchronous Operation (3-wire)

The communication end interrupt (SPIi_SPCEND) is made and the CENDF flag is set to 1 when both SPTX buffer and transmit shift register are empty in transmit-receive/transmit slave mode on clock synchronous operation (3-wire). The set timing of CENDF flag is same as the last data sampling of the RSPCK (the last odd edge of RSPCK when the SPCMD0.CPHA bit is 0, the last even edge of RSPCK when the SPCMD0.CPHA bit is 1). The communication end interrupt (SPIi_SPCEND) is one PCLKA width and low active.

The CENDF flag will not be cleared even if the SPCR.SPE bit is cleared after CENDF = 1. The CENDF flag will be cleared in one of following two conditions.

- The SSL0 assert timing of next transmission.
- The CENDF flag was written 0 after reading the SPSR when the CENDF flag was 1.

Figure 31.36 shows an example of communication end interrupt operation during transmig-receive/transmit slave mode on clock synchronous operation (3-wire).

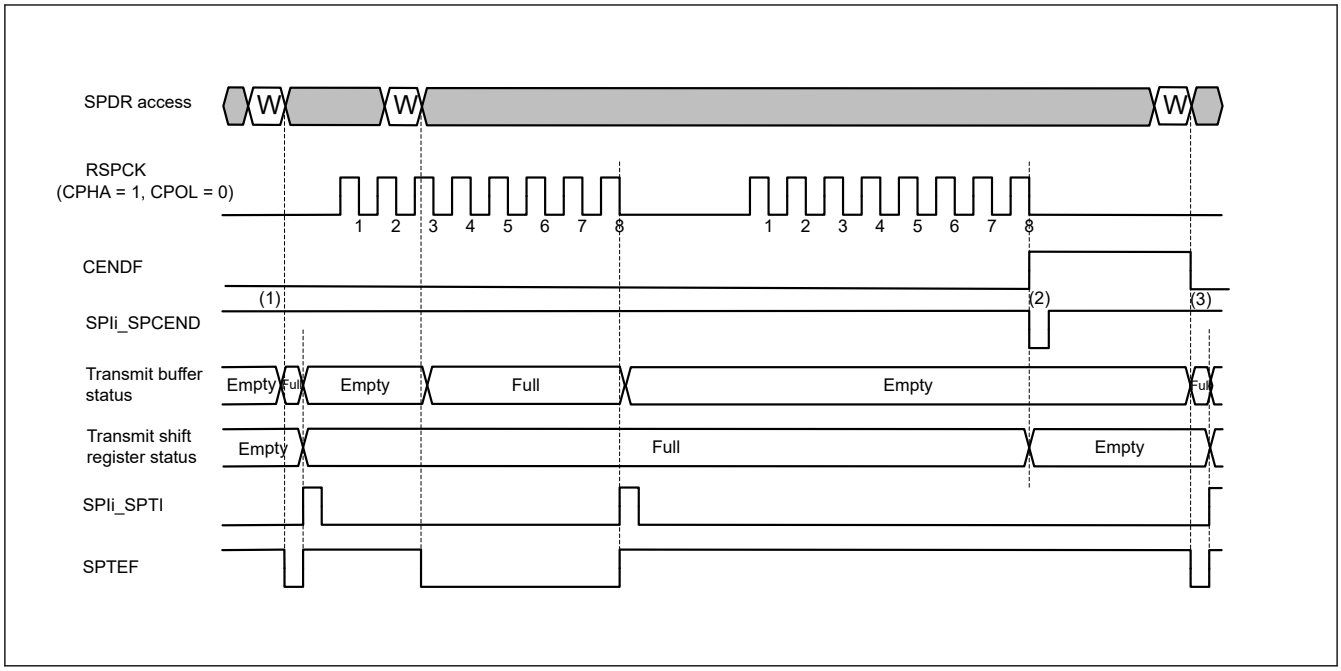

Figure 31.36 Example of Communication End Interrupt Operation (Transmit-Receive/Transmit Slave mode on Clock Synchronous Operation)

1. The CNEDF flag is 0 and the level of SPIi_SPCEND is 1 before communication start, and these have kept during communication.
2. The CENDF flag will be 1 (Communication End) at the last data sampling timing of RSPCK, when both SPTX buffer and transmit shift buffer are empty, and then the SPIi_SPCEND interrupt output when the CENDIE bit is 1.
3. The CENDF flag is cleared when the next transmission data is written to the transmit buffer (SPTX). Or the CENDF flag is cleared if the CENDF flag was written 0 after reading the SPCR when the CENDF flag was 1.

31.3.9.5 Receive Only in Slave Mode on Clock Synchronous Operation (3-wire)

The communication end interrupt (SPIi_SPCEND) is made and the CENDF flag is set to 1 at the last data sampling of the last transmission frame in receive only slave mode on clock synchronous operation (3-wire). The sampling timing is the last odd edge of RSPCK when the SPCMD0.CPHA bit is 0, the last even edge of RSPCK when the SPCMD0.CPHA bit is 1. The number of transmission frame is set by the SPDCR.SPFC[1:0]. The communication end interrupt (SPIi_SPCEND) is one PCLKA width and low active.

The CENDF flag will not be cleared even if the SPCR.SPE bit is cleared after CENDF = 1. The CENDF flag will be cleared in one of following two conditions.

- The first edge of RSPCK for next transmission.
- The CENDF flag was written 0 after reading the SPSR when the CENDF flag was 1.

Figure 31.37 shows an example of communication end interrupt operation during receive only slave mode on clock synchronous operation.

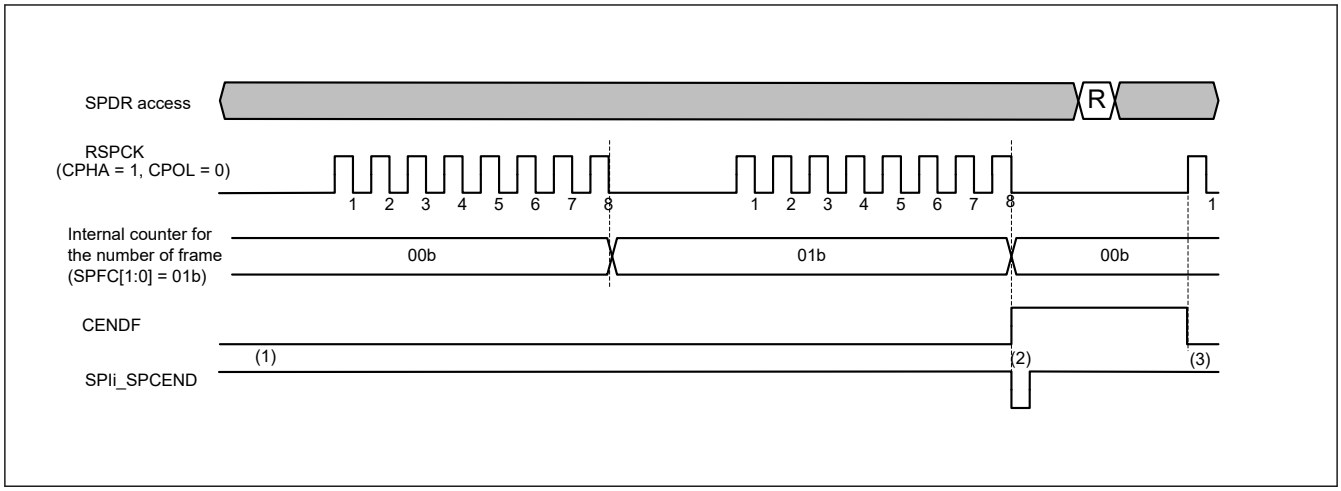

Figure 31.37 Example of Communication End Interrupt Operation (Receive-only Slave mode on Clock Synchronous Operation)

1. The CNEDF flag is 0 and the level of SPIi_SPCEND is 1 before communication start, and these have kept during communication.
2. The CENDF flag will be 1 (Communication End) at the last data sampling timing of RSPCK, when the last frame transmission end. The number of transmission frame is set by the SPDCR.SPFC[1:0]. And then the SPIi_SPCEND interrupt output when the CENDIE bit is 1.
3. The CENDF flag is cleared at the first edge of RSPCK for the next transmission. Or the CENDF flag is cleared if the CENDF flag was written 0 after reading the SPCR when the CENDF flag was 1.

31.3.9.6 Common Operation

In this chapter, the operation common to each mode / area option communication in section 31.3.9.1. Transmit-Receive/ Transmit in Master Mode to section 31.3.9.5. Receive Only in Slave Mode on Clock Synchronous Operation (3-wire) is explained. When the enable of SPI communication end interrupt (CENDIE) is 0, at the time of communication completion, a flag of communication end (CENDF) is set and an event of communication end (sp_elccend) is output, but no interrupt is output. However, if the enable of communication end interrupt (CENDIE) is set to 1 before clearing the flag of communication end (CENDF) while the enable of SPI function (SPE) is 1, the communication end interrupt is output.

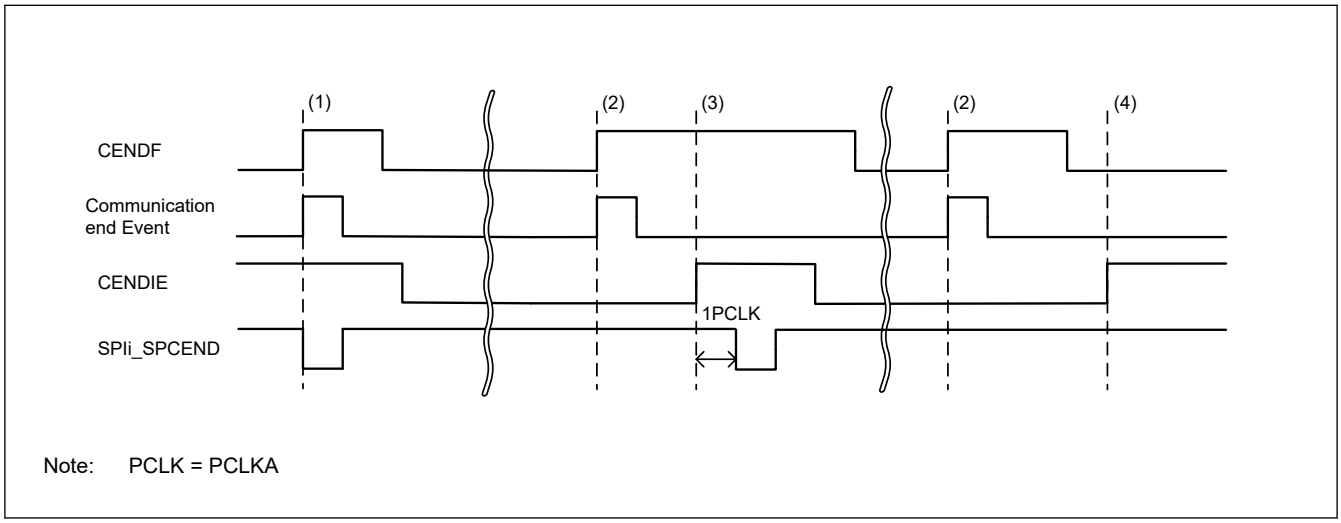

Figure 31.38 Example of Communication End Interrupt Operation (Enable control)

1. When the enable of SPI communication end interrupt (CENDIE) is 1, at the time of communication completion, the following three are the same timing.
   - A flag of communication end (CENDF)
   - An event of communication end (sp_elccend)

- The communication end interrupt

2. When the enable of SPI communication end interrupt (CENDIE) is 0, at the time of communication completion, the following two are the same timing, but no interrupt.
   - A flag of communication end (CENDF)
   - An event of communication end (sp_elccend)
3. After (2), if the enable of communication end interrupt (CENDIE) is set when the enable of SPI function (SPE) and the flag of communication end (CENDF) are 1, the communication end interrupt is output after 1 PCLKA.
4. After (2), even if the enable of communication end interrupt (CENDIE) is set when the enable of SPI function (SPE) or the flag of communication end (CENDF) is 0, the communication end interrupt is not output.

31.3.10 Error Detection

In normal SPI serial transfers, data written to the transmit buffer of SPDR/SPDR_HA is transmitted, and received data can be read from the receive buffer of SPDR/SPDR_HA. If access is made to SPDR/SPDR_HA, an abnormal transfer might occur, depending on the status of the transmit or receive buffer or the status of the SPI at the beginning or end of serial transfer.

If an abnormal transfer occurs, the SPI detects the event as an underrun error, overrun error, parity error, or mode fault error. Table 31.10 lists the relationship between non-normal transfer operations and the SPI error detection function.

Table 31.10 Relationship between non-normal transfer operations and SPI error detection

Operation	Occurrence condition	SPI operation	Error detection
1	SPDR/SPDR_HA is written when the transmit buffer is full.	• The contents of the transmit buffer are kept • Write data is missing	None
2	SPDR/SPDR_HA is read when the receive buffer is empty.	The contents of the receive buffer and previously received data are output.	None
3	Serial transfer is started in slave mode when the SPI is not able to transmit data.	• Serial transfer is suspended • Transmit or receive data is missing • Driving of the MISOn output signal is stopped • SPI function is disabled	Underrun error
4	Serial transfer terminates when the receive buffer is full.	• Keeps the contents of the receive buffer • Missing receive data	Overrun error
5	An incorrect parity bit is received during full-duplex synchronous serial communication with the parity function enabled in following mode: • Transmit-receive master mode • Transmit-receive slave mode • Receive-only slave mode	The parity error flag is asserted	Parity error
6	The SSLn0 input signal is asserted when the serial transfer is idle in multi-master mode.	• Driving of the RSPCKn, MOSIn, SSLn1 to SSLn3 output signals is stopped • SPI function is disabled	Mode fault error
7	The SSLn0 input signal is asserted during serial transfer in multi-master mode.	• Serial transfer is suspended • Transmit or receive data is missing • Driving of the RSPCKn, MOSIn, SSLn1 to SSLn3 output signals is stopped • SPI function is disabled	Mode fault error
8	The SSLn0 input signal is negated during serial transfer in slave mode.	• Serial transfer is suspended • Transmit or receive data is missing • Driving of the MISOn output signal is stopped • SPI function is disabled	Mode fault error

In operation 1 described in Table 31.10, the SPI does not detect an error. To prevent data omission during writes to SPDR/SPDR_HA, the writes to SPDR/SPDR_HA must be executed using a transmit buffer empty interrupt request (when the SPSR.SPTEF flag is 1).

Similarly, the SPI does not detect an error in operation 2. To prevent extraneous data from being read, SPDR/SPDR_HA read must be executed with an SPI receive buffer full interrupt request (when the SPSR.SPRF flag is 1).

For information on the other errors, see the following sections:

- Underrun error, indicated in operation 3, see section 31.3.10.4. Underrun errors
- Overrun error, indicated in operation 4, see section 31.3.10.1. Overrun errors
- Parity error, indicated in operation 5, see section 31.3.10.2. Parity errors
- Mode fault error, indicated in operations 6 to 8, see section 31.3.10.3. Mode fault errors
- For the transmit and receive interrupts, see section 31.3.7. Transmit Buffer Empty and Receive Buffer Full Interrupts.

31.3.10.1 Overrun errors

If a serial transfer ends when the receive buffer of SPDR/SPDR_HA is full, the SPI detects an overrun error and sets the SPSR.OVRF flag to 1. When the OVRF flag is 1, the SPI does not copy data from the shift register to the receive buffer, so the data prior to the error occurrence is retained in the receive buffer. To set the OVRF flag to 0, write 0 to the OVRF flag after the CPU reads SPSR with the OVRF flag set to 1.

Figure 31.39 shows an example of operation of the OVRF and SPRF flags. The SPSR and SPDR_HA accesses shown in Figure 31.39 indicate the condition of accesses to the SPSR and SPDR_HA register, where W denotes a write cycle, and R a read cycle. In this example, the SPI performs an 8-bit serial transfer when SPCMDm.CPHA bit is 1 and the SPCMDm.CPOL bit is 0. The numbers given for RSPCKn in the waveform represent the number of RSPCK cycles, such as the number of transferred bits.

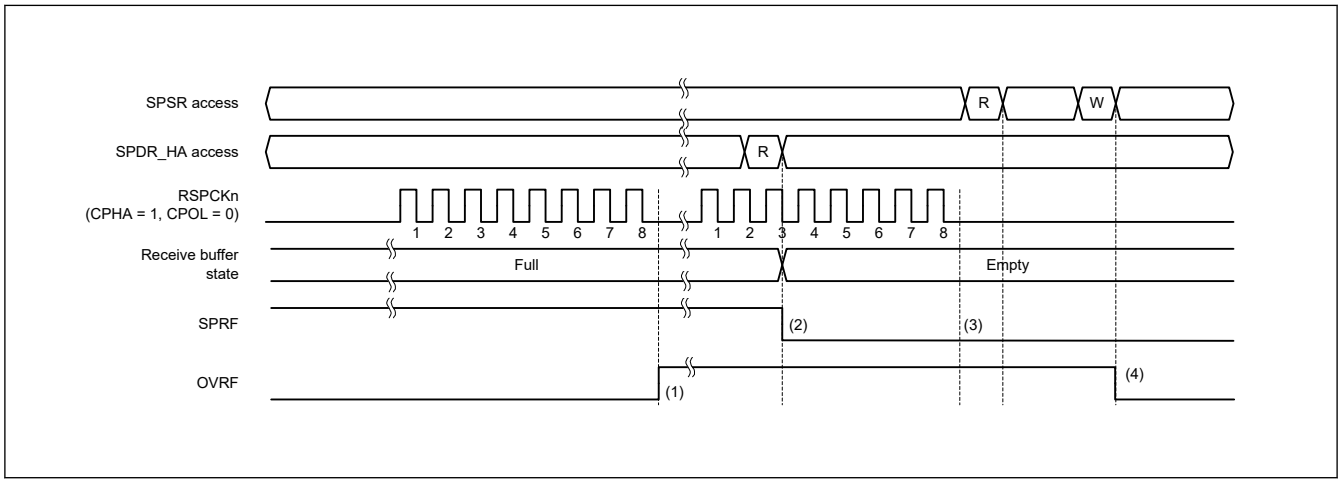

Figure 31.39 Operation example of the OVRF and SPRF flags

The operation of the flags at timings (1) to (4) in Figure 31.39 is as follows:

1. If a serial transfer terminates with the SPRF flag set to 1 (receive buffer full), the SPI detects an overrun error, and sets the OVRF flag to 1. The SPI does not copy the data in the shift register to the receive buffer. Even when the SPPE bit is 1, parity errors are not detected.
2. When SPDR/SPDR_HA is read, the SPI outputs the data in the receive buffer. The SPRF flag is then set to 0. The receive buffer becoming empty does not set the OVRF flag to 0.
3. If the serial transfer ends with the OVRF flag set to 1 (overrun error occurred), the SPI does not copy data in the shift register to the receive buffer (the SPRF flag does not set to 1). A receive buffer full interrupt is not generated. Even when the SPPE bit is 1, parity errors are not detected. In an overrun error state when the SPI does not copy the received data from the shift register to the receive buffer, on termination of the serial transfer, the SPI determines that the shift register is empty. This enables data transfer from the transmit buffer to the shift register.
4. If 0 is written to the OVRF flag after SPSR is read when the OVRF flag is 1, the OVRF flag clears is set to 0.

The occurrence of an overrun can be checked either by reading SPSR or by using an SPI error interrupt and reading SPSR. When executing a serial transfer, you must ensure that overrun errors are detected early, for example by reading SPSR immediately after SPDR/SPDR_HA/SPDR_BY is read.

If an overrun error occurs and the OVRF flag sets to 1, normal reception operations cannot be performed until the OVRF flag is set to 0.

When the RSPCK auto-stop function is enabled (SPCR2.SCKASE = 1) in master mode, an overrun error does not occur. Figure 31.40 and Figure 31.41 show the clock stop waveform when a serial transfer continues while the receive buffer is full in master mode.

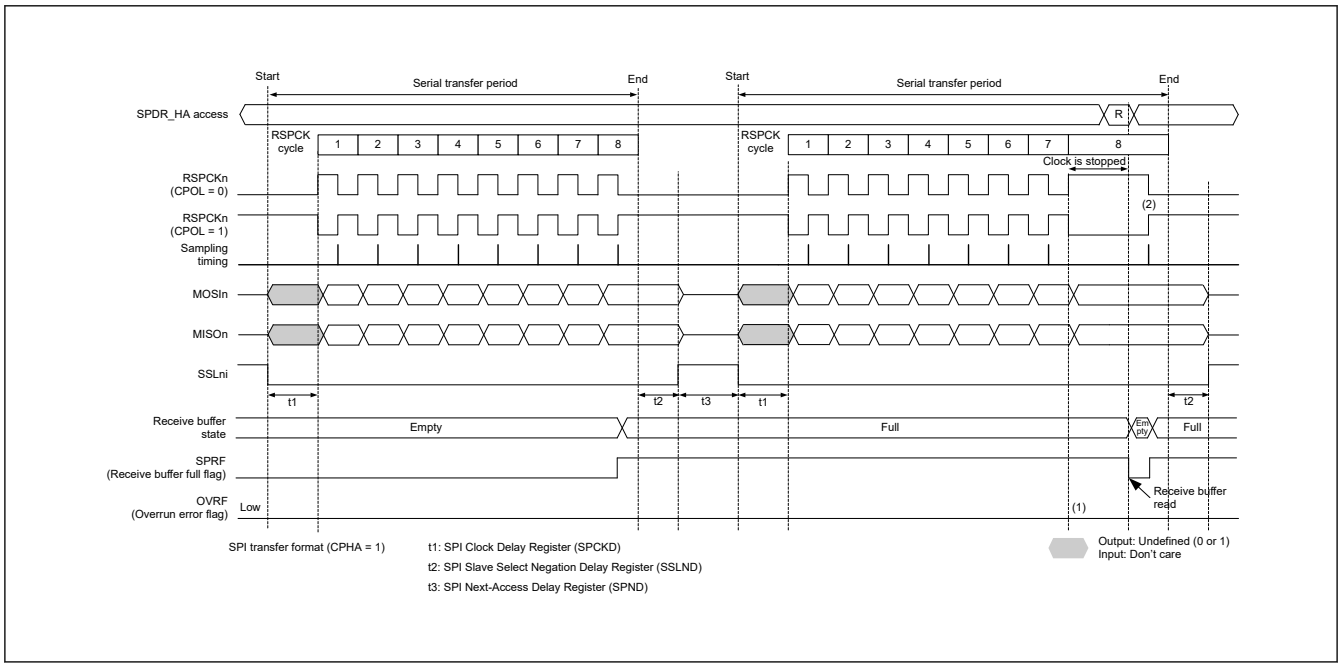

Figure 31.40 Clock stop waveform when serial transfer continues while receive buffer is full in master mode (CPHA = 1)

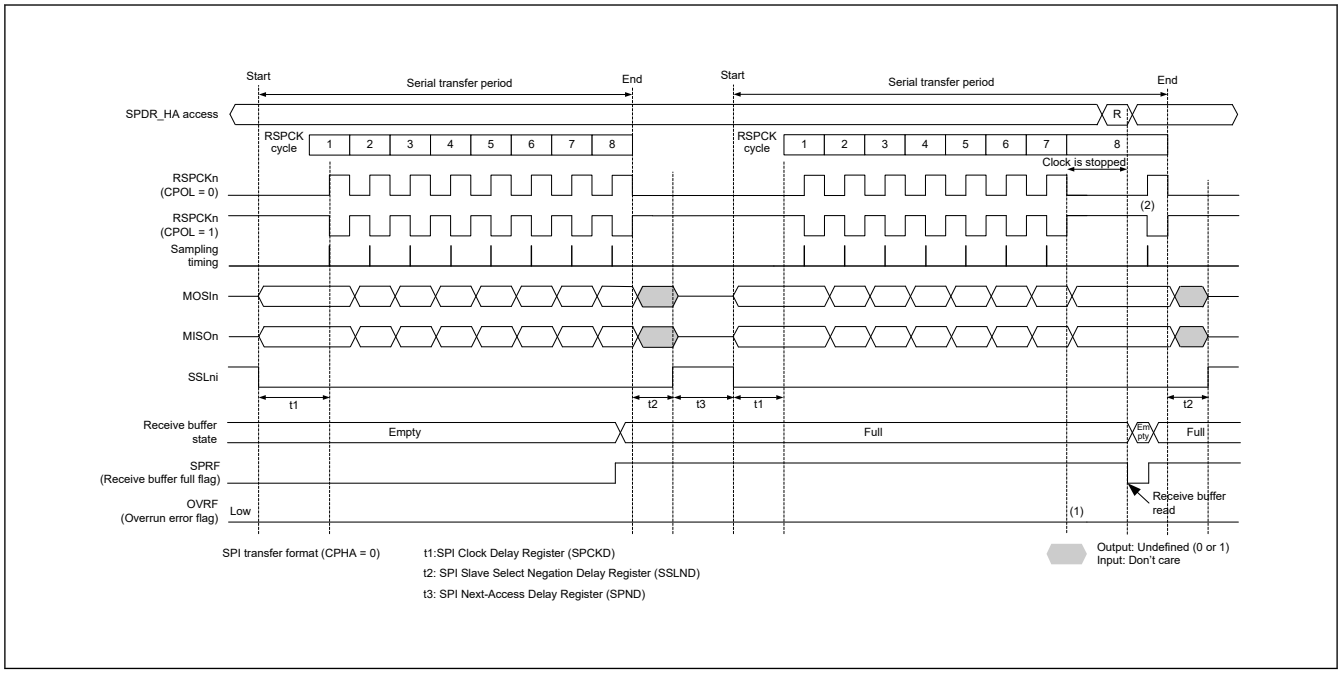

Figure 31.41 Clock stop waveform when serial transfer continues while receive buffer is full in master mode (CPHA = 0)

The operation of the flags at timings (1) and (2) in Figure 31.40 and Figure 31.41 is as follows:

1. When the receive buffer is full, an overrun error does not occur because the RSPCK clock is stopped.
2. If SPDR/SPDR_HA is read while the clock is stopped, data in the receive buffer can be read. The RSPCK clock restarts after reading the receive buffer (after the SPSR.SPRF flag is set to 0).

Overrun error does not occur when RSPCK automatic stop function is enabled for transfer with no delay of between frames during burst transfer in master mode. Figure 31.42 and Figure 31.43 show the clock stop waveform, when there is no delay between frames at burst transfer and the serial transfer continues in the reception buffer full state.

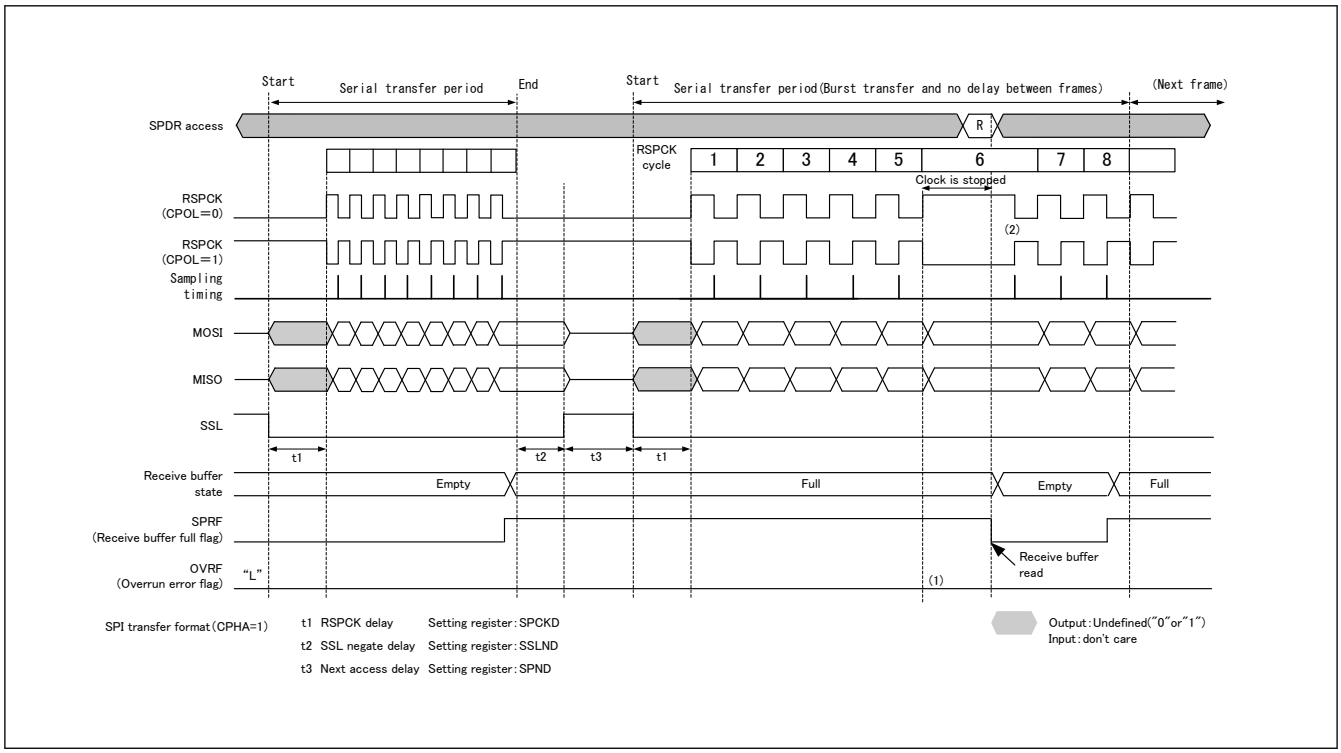

Figure 31.42 Clock stop waveform when serial transfer continues in the receive buffer full in master mode (at burst transfer and no delay between frames CPHA = 1)

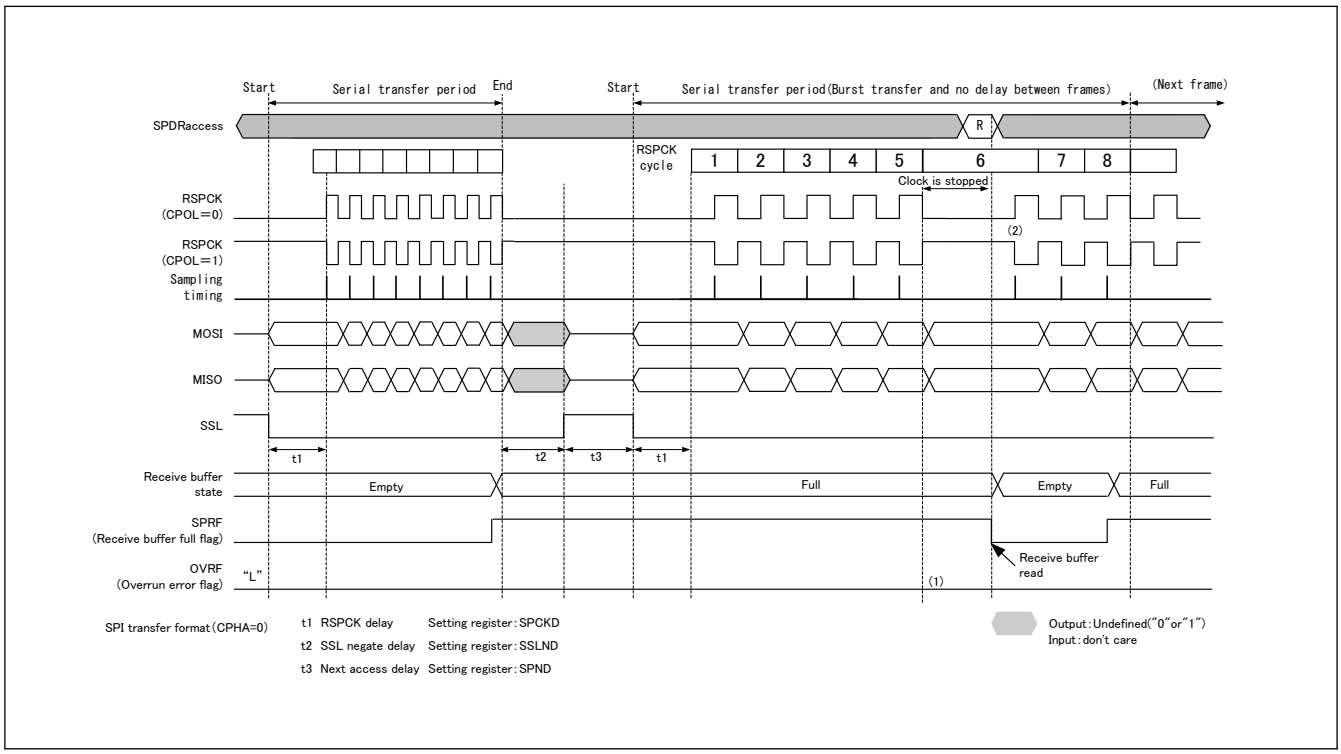

Figure 31.43 Clock stop waveform when serial transfer continues in the receive buffer full in master mode (at burst transfer and no delay between frames CPHA = 0)

The following describes operation of flags at timings (1) and (2) in the figure above.

1. While the receive buffer is full, the RSPCK clock is deactivated and no overrun error occurs.
2. Receive buffer data can be read by reading SPDR during clock stop. After the receive buffer data has been read (after the SPSR.SPRF flag has been cleared to 0), the RSPCK clock restarts.

31.3.10.2 Parity errors

When full-duplex synchronous serial communications is performed with the SPCR.TXMD bit set to 0 and the SPCR2.SPPE bit set to 1, when serial transfer ends, the SPI checks whether there are parity errors. On detecting a parity error in the received data, the SPI sets the SPSR.PERF flag to 1. Because the SPI does not copy data in the shift register to the receive buffer when the SPSR.OVRF flag is set to 1, parity error detection is not performed for the received data. To set the PERF flag to 0, write 0 to the PERF flag after the SPSR register is read with the PERF flag set to 1.

Figure 31.44 shows an example of operation of the OVRF and PERF flags. The SPSR access shown in Figure 31.44 indicates the condition of access to the register, where W denotes a write cycle, and R a read cycle. In this example, full-duplex serial communication is performed while the SPCR2.SPPE bit is 1. The SPI performs an 8-bit serial transfer when SPCMDm.CPHA bit is 1 and the SPCMDm.CPOL bit is 0. The numbers given for RSPCKn in the waveform represent the number of RSPCK cycles, such as the number of transferred bits.

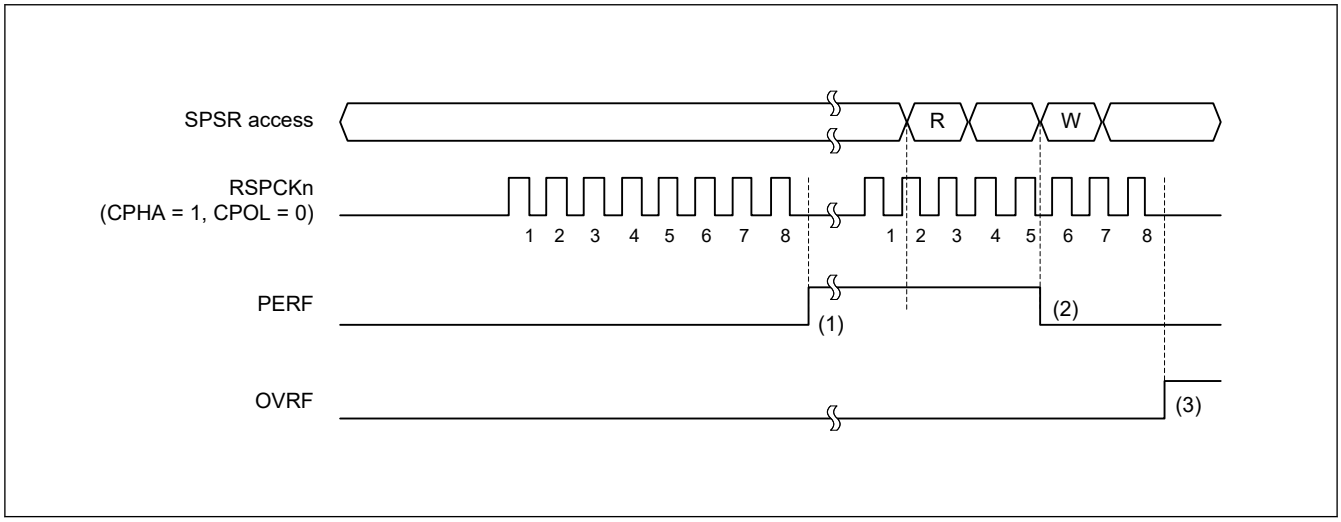

Figure 31.44 Operation example of the OVRF and PERF flags

The operation of the flags at timings (1) to (3) in Figure 31.44 is as follows:

1. If a serial transfer terminates with the SPI not detecting an overrun error, the SPI copies the data in the shift register to the receive buffer. The SPI checks the received data at this time and sets the PERF flag to 1 if a parity error is detected.
2. If 0 is written to the PERF flag after the SPSR register is read when the PERF flag is 1, the PERF flag is set to 0.
3. When the SPI detects an overrun error and serial transfer is terminated, the data in the shift register is not copied to the receive buffer. The SPI does not perform parity error detection at this time.

Parity errors can be checked for by either reading the SPSR register or using an SPI error interrupt and reading the SPSR register. When executing a serial transfer, such checks are required to ensure early detection of parity errors. When the SPI is used in master mode, the pointer value to the SPCMDm register at the occurrence of the error can be checked by reading the SPSSR.SPECM[2:0] bits (Only SPI0).

31.3.10.3 Mode fault errors

The SPI operates in multi-master mode when the SPCR.MSTR bit is 1, the SPCR.SPMS bit is 0, and the SPCR.MODFEN bit is 1. If the active level is input for the SSLn0 input signal of the SPI in multi-master mode, the SPI detects a mode fault error regardless of the status of the serial transfer, and sets the SPSR.MODF flag to 1. On detecting the mode fault error, the SPI copies the value of the pointer to SPCMDm to the SPDCR.SPFC[1:0] bits. The active level of the SSLn0 signal is determined by the SSLP.SSL0P bit.

When the MSTR bit is 0, the SPI operates in slave mode. The SPI detects a mode fault error if the MODFEN bit of the SPI in slave mode is 1, and the SPMS bit is 0, and if the SSLn0 input signal is negated during the serial transfer period (from the time the driving of valid data is started to the time the final valid data is fetched).

On detecting a mode fault error, the SPI stops the driving of the output signals and clears the SPCR.SPE bit to 0 (see section 31.3.11. Initializing the SPI). For multi-master configuration, detection of a mode fault error is used to stop the driving of output signals and the SPI function, which allows the master to be released.

The occurrence of a mode fault error can be checked either by reading SPSR or by using an SPI error interrupt and reading SPSR. Detecting mode-fault errors without using the SPI error interrupt requires polling of SPSR. When using the SPI in master mode, the value of the pointer to the SPCMDm register at the occurrence of the error can be checked by reading the SPSSR.SPECM[2:0] bits.

When the MODF flag is 1, writing 1 to the SPE bit is ignored by the SPI. To enable the SPI function after the detection of a mode fault error, the MODF flag must be set to 0.

31.3.10.4 Underrun errors

While the SPI is operating in slave mode (SPCR.MSTR bit = 0) and the Extended Communication Mode Select bit (ETXMD) in the SPI Control Register 3 (SPCR3) is set to 0, if serial transfer is started before transmit data output is ready with the SPCR.SPE bit set to 1 (SPI function enabled), the SPI detects an underrun error and sets the SPSR.MODF and SPSR.UDRF flags to 1.

On detecting an underrun error, the SPI stops the driving of output signals and clears the SPCR.SPE bit to 0 (see section 31.3.11. Initializing the SPI).

The occurrence of underrun errors can be checked either by reading SPSR or by using an SPI error interrupt and reading SPSR. Detecting underrun errors without using the SPI error interrupt requires polling of SPSR.

When the MODF flag is 1, writing 1 to the SPE bit is ignored by the SPI. To enable the SPI function after the detection of an underrun error, the MODF flag must be set to 0.

31.3.11 Initializing the SPI

If 0 is written to the SPCR.SPE bit or if the SPI sets the SPE bit to 0 because it detected a mode fault error or an underrun error, the SPI disables the SPI function and initializes some of the module functions. When a system reset is generated, the SPI initializes all of the module functions. This section describes initialization by clearing of the SPCR.SPE bit and by a system reset.

31.3.11.1 Initialization by clearing of the SPCR.SPE bit

When the SPCR.SPE bit is set to 0, the SPI initializes by:

- Suspending any serial transfer that is being executed
- Stopping the driving of output signals (Hi-Z) in slave mode
- Initializing the internal state of the SPI
- Initializing the transmit buffer of the SPI (the SPSR.SPTEF flag sets to 1)

Initialization by clearing of the SPE bit does not initialize the control bits of the SPI. For this reason, the SPI can be started in the same transfer mode in use prior to initialization when the SPE bit is set to 1 again.

The SPSR.CENDF, SPSR.SPRF, SPSR.OVRF, SPSR.MODF, SPSR.PERF, and SPSR.UDRF flags are not initialized, and the value of the SPI Sequence Status Register (SPSSR) is not initialized. Therefore, even after the SPI is initialized, data from the receive buffer can be read to check the communication completion status and the error status during an SPI transfer.

The transmit buffer is initialized to an empty state (the SPSR.SPTEF flag sets to 1). Therefore, if the SPCR.SPTIE bit is set to 1 after SPI initialization, a transmit buffer empty interrupt is generated. To disable any transmit buffer empty interrupts when the SPI is initialized, write 0 to the SPTIE bit simultaneously while writing 0 to the SPE bit.

31.3.11.2 Initialization by system reset

A system reset completely initializes the SPI by initializing all SPI control bits, status bits, and data registers, in addition to meeting the requirements described in section 31.3.11.1. Initialization by clearing of the SPCR.SPE bit.

31.3.12 SPI Operation

31.3.12.1 Master mode operation

The only difference between single- and multi-master mode operation is the use of mode fault error detection (see section 31.3.10. Error Detection). In single-master mode, the SPI does not detect mode fault errors whereas in multi-master mode, it does. This section explains operations that are common to both modes.

(1) Starting a serial transfer

The SPI updates the data in the transmit buffer (SPTX) when data is written to the SPI Data Register (SPDR/SPDR_HA) with the SPI transmit buffer empty, data for the next transfer is not set, and the SPSR.SPTEF flag is 0. When the shift register is empty after the number of frames set in the SPDCR.SPFC[1:0] bits are written to the SPDR/SPDR_HA/SPDR_BY, the SPI copies data from the transmit buffer to the shift register and starts serial transfer. On copying transmit data to the shift register, the SPI changes the status of the shift register to full. On termination of the serial transfer, it changes the status of the shift register to empty. The status of the shift register cannot be referenced.

The polarity of the SSLni output pins depends on the SSLP register settings. For details on the SPI transfer format, see section 31.3.5. Transfer Formats.

(2) Terminating a serial transfer

Regardless of the SPCMDm.CPHA bit setting, the SPI terminates the serial transfer after transmitting an RSPCKn edge associated with the final sampling timing. If free space is available in the receive buffer (SPRX) (the SPSR.SPRF flag is 0), on termination of the serial transfer, the SPI copies data from the shift register to the receive buffer of the SPDR/SPDR_HA register.

The final sampling timing varies depending on the bit length of transfer data. In master mode, the SPI data length depends on the SPCMDm.SPB[3:0] bit settings. The polarity of the SSLni output pin depends on the SSLP register settings. For details on the SPI transfer format, see section 31.3.5. Transfer Formats.

(3) Sequence control

The transfer format used in master mode is determined by the SPSCR, SPCMDm, SPBR, SPCKD, SSLND, and SPND registers.

The SPSCR register determines the sequence configuration for serial transfers that are executed by the SPI in master mode. The following items are set in the SPCMDm register:

- SSLni pin output signal value
- MSB- or LSB-first
- Data length
- Some of the bit rate settings
- RSPCK polarity and phase
- Whether SPCKD is to be referenced
- Whether SSLND is to be referenced
- Whether SPND is to be referenced

SPBR holds some of the bit rate settings, including SPCKD (SPI clock delay), SSLND (SSL negation delay), and SPND (next-access delay).

Based on the sequence length assigned in SPSCR, the SPI makes up a sequence comprised of a part or all of the SPCMDm register. The SPI contains a pointer to the SPCMDm register that makes up the sequence. The value of this pointer can be checked by reading the SPSSR.SPCP[2:0] bits. When the SPCR.SPE bit is set to 1 and the SPI function is enabled, the SPI loads the pointer to the commands in SPCMD0, and incorporates the SPCMD0 settings into the transfer format at the beginning of serial transfer. The SPI increments the pointer each time the next-access delay period for a data transfer ends. On completion of the serial transfer that corresponds to the final command in the sequence, the SPI sets the pointer to SPCMD0, and in this way the sequence is executed repeatedly.

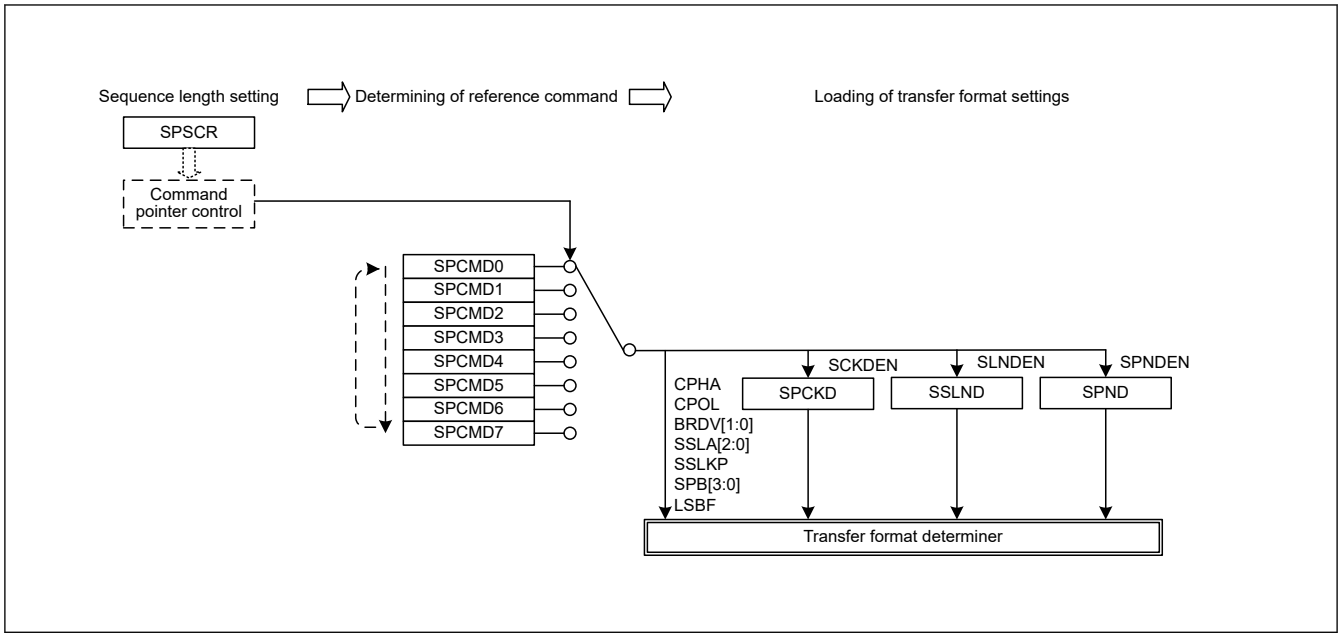

Figure 31.45 Procedure for determining the form of a serial transfer in master mode

In this section, a frame is the combination of the data in SPDR/SPDR_HA and the settings in SPCMDm.

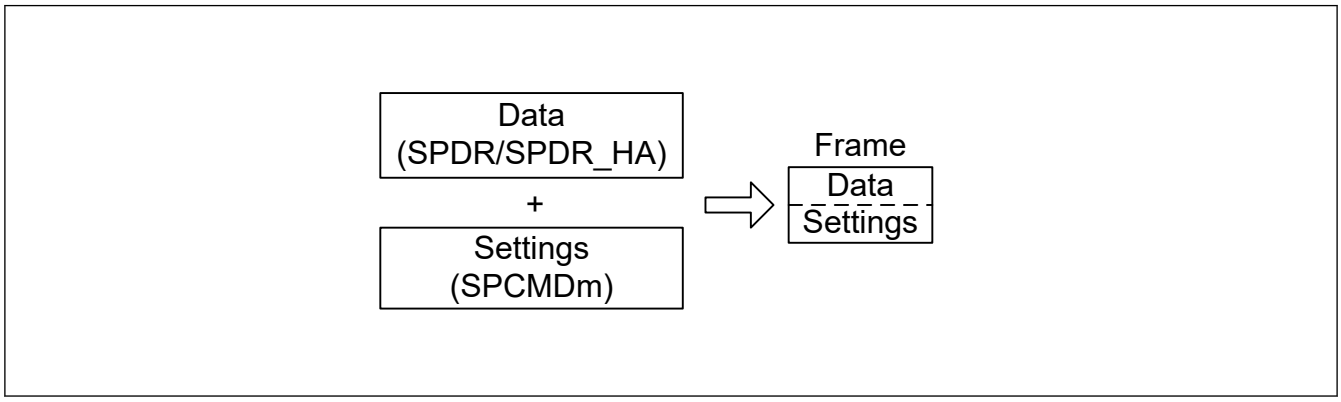

Figure 31.46 Conceptual diagram of frames

Figure 31.47 shows the correspondence between the commands and the transmit and receive buffers in the sequence of operations specified by the settings in Table 31.4.

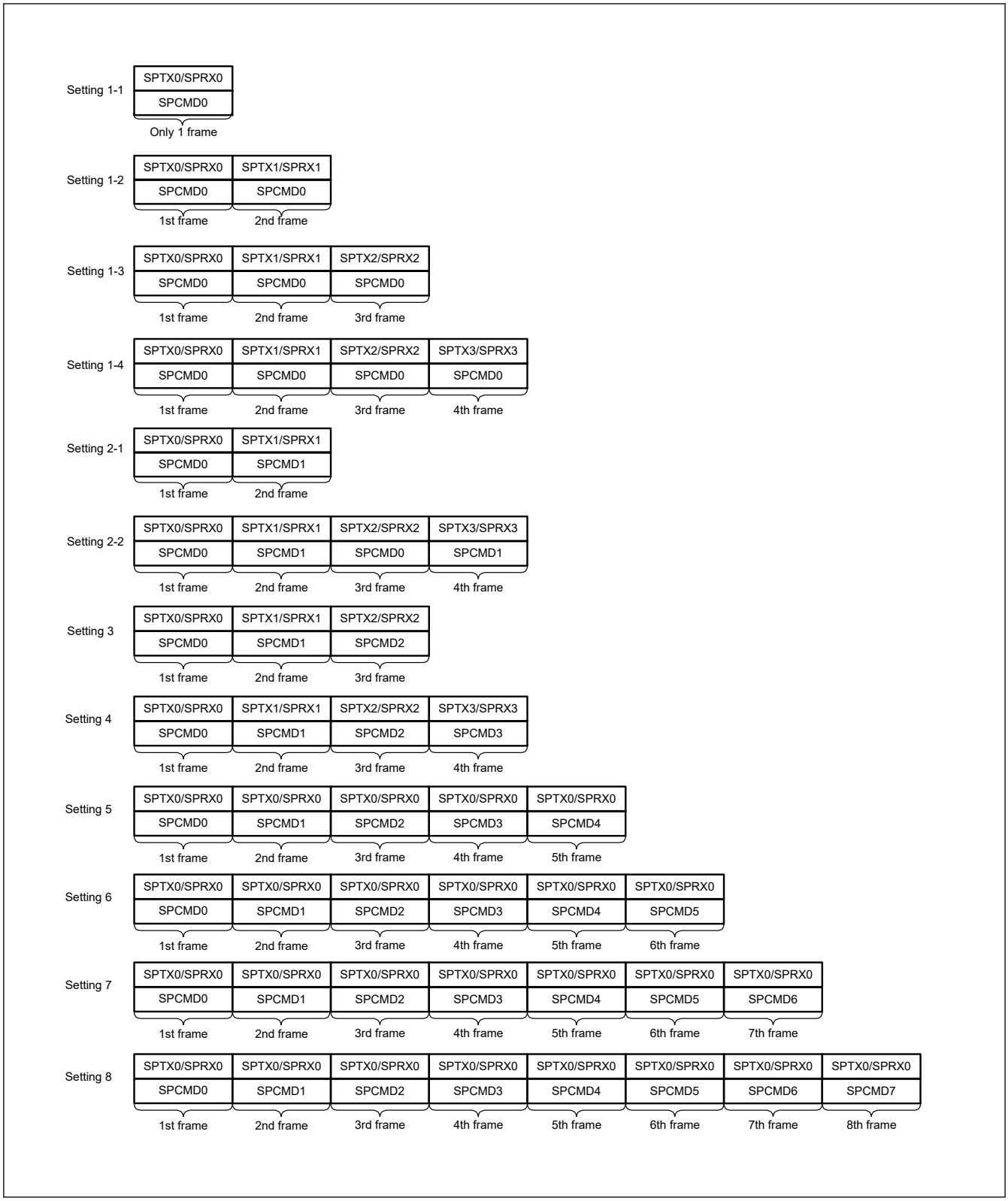

Figure 31.47 Correspondence between SPI Command Register and transmit and receive buffers in sequence operations

(4) Burst transfers

If the SPCMDm.SSLKP bit that the SPI references during the current serial transfer is 1, the SPI maintains the SSLni signal level during the serial transfer until the beginning of the SSLni signal assertion for the next serial transfer. If the SSLni signal level for the next serial transfer is the same as the SSLni signal level for the current serial transfer, the SPI can execute continuous serial transfers while keeping the SSLni signal assertion status (burst transfer).

- When Between Burst Transfer Frames Delay Select bit (BFDS) of SPI control register 3 (SPCR3) is 0.

Figure 31.48 shows an example of an SSLni signal operation for a burst transfer that is implemented using the SPCMD0 and SPCMD1 register settings. This section describes SPI operations (1) to (8) shown in Figure 31.48.

Note: The polarity of the SSLni output signal depends on the SSLP register settings.

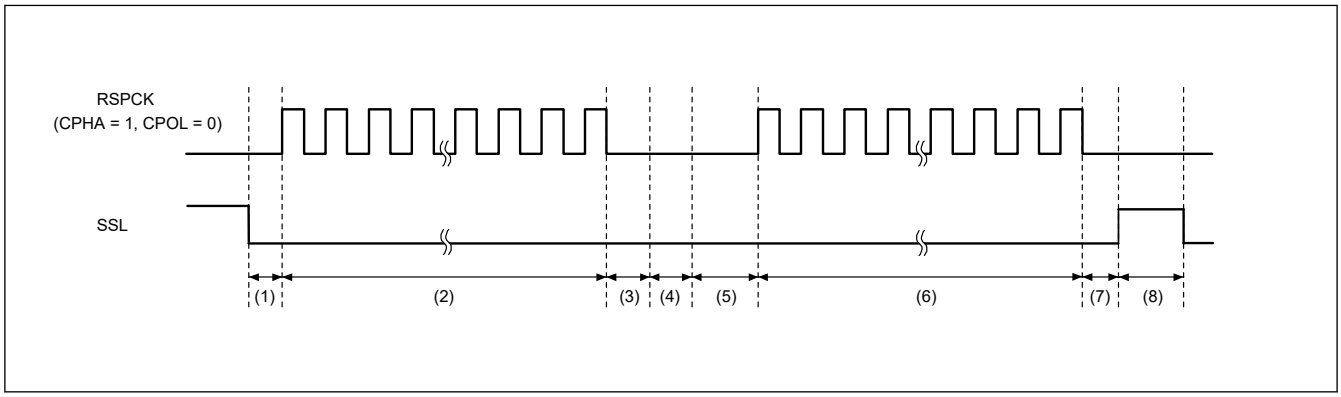

Figure 31.48 Example of burst transfer operation using the SSLKP bit (BFDS = 0)

The SPI operation at times (1) to (8) in the figure is as follows:

1. Based on the SPCMD0 settings, the SPI asserts the SSLni signal and inserts RSPCK delays.
2. The SPI executes serial transfers in accordance with the SPCMD0 settings.
3. The SPI inserts an SSL negation delay.
4. Because the SPCMD0.SSLKP bit is 1, the SPI keeps the SSLni signal value specified in SPCMD0. This period is sustained at a minimum for a period equal to the next-access delay in SPCMD0. If the shift register is empty after the passage of the minimum period, this period is sustained until the transmit data is stored in the shift register for the next transfer.
5. Based on the SPCMD1 settings, the SPI asserts the SSLni signal and inserts RSPCK delays.
6. The SPI executes serial transfers in accordance with the SPCMD1 settings.
7. Insert SSL negate delay.
8. Because the SPCMD1.SSLKP bit is 0, the SPI negates the SSLni signal. In addition, a next-access delay is inserted in accordance with SPCMD1.

If the SSLni signal output settings in the SPCMDm register where 1 is assigned to the SSLKP bit are different from the SSLni signal output settings in the SPCMDm register to be used in the next transfer, the SPI switches the SSLni signal status to SSLni signal assertion as shown in (5) in Figure 31.48. This corresponds to the command for the next transfer.

Note: If such an SSLni signal switching occurs, the slaves that drive the MISOn signal compete, and collision of signal levels might occur.

The SPI in master mode references the SSLni signal operation within the module when the SSLKP bit is not used. When the SPCMDm.CPHA bit is 0, the SPI can accurately start serial transfers by using the SSLni signal assertion for the next transfer that is detected internally.

- When Between Burst Transfer Frames Delay Select bit (BFDS) of SPI control register 3 (SPCR3) is 1.

Figure 31.49 shows an example of SSL signal operation when burst transfer is achieved by using the settings of SPCMD0 and SPCMD1. The following describes SPI operations of (1) to (6) shown in Figure 31.49. The SSL output signal polarity depends on the set SPI slave select polarity register (SSLP) value.

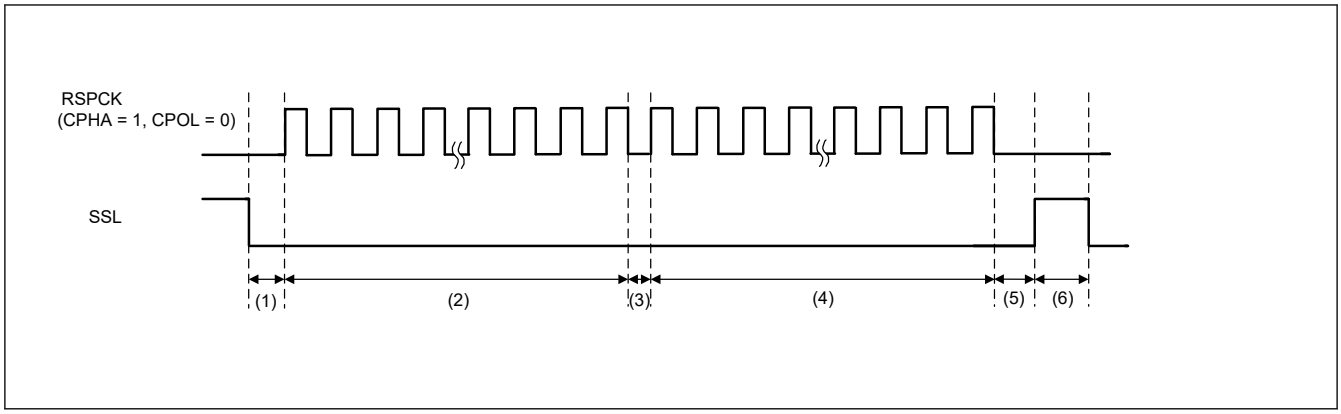

Figure 31.49 Example of Burst Transfer Operation Using SSLKP Bit (BFDS = 1)

1. Assert the SSL signal and insert an RSPCK delay according to SPCMD0. The RSPCK delay is inserted only the first frame of burst transmission.
2. Perform serial transfer according to SPCMD0. Wait last clock until the next transmit data is stored in the shift register, if the shift register is empty during RSPCK negate period between frames.
3. The value of SSL signal according to SPCMD0 was hold, because the SPCMD0.SSLKP bit is 1. RSPCK negate period between frames is 0.5RSPCK, if the shift register is not empty.
4. Perform serial transfer according to SPCMD1.
5. Insert SSL negate delay for the last frame.
6. The SSL signal is negated because the SSLKP bit in SPCMD1 is 0. Furthermore, the next-access delay is inserted according to SPCMD1.

(5) RSPCK delay (t1)

The RSPCK delay value of the SPI in master mode depends on the SPCMDm.SCKDEN bit setting and the SPCKD.SCKDL[2:0] bits setting. The SPI determines the SPCMDm register to be referenced during a serial transfer by pointer control, and determines an RSPCK delay using the SPCMDm.SCKDEN bit and SPCKD.SCKDL[2:0] bits, as listed in Table 31.11. For a definition of RSPCK delay, see section 31.3.5. Transfer Formats.

RSPCK delay insert to only the first frame of burst transmission, when transmit without “Between Burst Transfer Frames Delay”. (The SPCMD.SSLKP bit is 1 and the SPCR3.BFDS bit is 1.)

Table 31.11 Relationship between the SPCMDm.SCKDEN bit, SPCKD.SCKDL[2:0] bits, and RSPCK delay

SPCMDm.SCKDEN bit	SPCKD.SCKDL[2:0] bits	RSPCK delay
0	000b to 111b	1 RSPCK
1	000b	1 RSPCK
	001b	2 RSPCK
	010b	3 RSPCK
	011b	4 RSPCK
	100b	5 RSPCK
	101b	6 RSPCK
	110b	7 RSPCK
	111b	8 RSPCK

(6) SSL negation delay (t2)

The SSL negation delay value of the SPI in master mode depends on the SPCMDm.SLNDEN bit setting and the SSLND.SLNDL[2:0] bits setting. The SPI determines the SPCMDm register to be referenced by pointer control during a serial transfer, and determines an SSL negation delay using the SPCMDm.SLNDEN bit and SSLND.SLNDL[2:0] bits, as listed in Table 31.12. For a definition of SSL negation delay, see section 31.3.5. Transfer Formats.

An SSL negation delay is inserted to only the last frame of the burst transmission, that is, transmit without “between burst transfer frames delay”. (SPCMD.SSLKP bit is 1 and SPCR3.BFDS bit is 1).

Table 31.12 Relationship between the SPCMDm.SLNDEN bit, SSLND.SLNDL[2:0] bits, and SSL negation delay

SPCMDm.SLNDEN bit	SSLND.SLNDL[2:0] bits	SSL negation delay
0	000b to 111b	1 RSPCK
1	000b	1 RSPCK
	001b	2 RSPCK
	010b	3 RSPCK
	011b	4 RSPCK
	100b	5 RSPCK
	101b	6 RSPCK
	110b	7 RSPCK
	111b	8 RSPCK

(7) Next-access delay (t3)

The next-access delay value of the SPI in master mode depends on the SPCMDm.SPNDEN bit setting and the SPND.SPNDL[2:0] bits setting. The SPI determines the SPCMDm register to be referenced during serial transfer by pointer control, and then determines a next-access delay during serial transfer using the SPCMDm.SPNDEN bit and SPND.SPNDL[2:0] bits, as listed in Table 31.13. For a definition of next-access delay, see section 31.3.5. Transfer Formats.

A next-Access delay is inserted to only the last frame of the burst transmission, that is, transmit without “between burst transfer frames delay”. (SPCMD.SSLKP bit is 1 and SPCR3.BFDS bit is 1).

Table 31.13 Relationship between the SPCMDm.SPNDEN bit, SPND.SPNDL[2:0] bits, and next-access delay

SPCMDm.SPNDEN bit	SPND.SPNDL[2:0] bits	Next-access delay
0	000b to 111b	1 RSPCK + 2 PCLKA
1	000b	1 RSPCK + 2 PCLKA
	001b	2 RSPCK + 2 PCLKA
	010b	3 RSPCK + 2 PCLKA
	011b	4 RSPCK + 2 PCLKA
	100b	5 RSPCK + 2 PCLKA
	101b	6 RSPCK + 2 PCLKA
	110b	7 RSPCK + 2 PCLKA
	111b	8 RSPCK + 2 PCLKA

(8) Initialization flow

Figure 31.50 shows an example of SPI initialization flow when the SPI is in master mode. For information on how to set up the Interrupt Controller Unit (ICU), DMAC and I/O ports, see the descriptions given in the individual blocks.

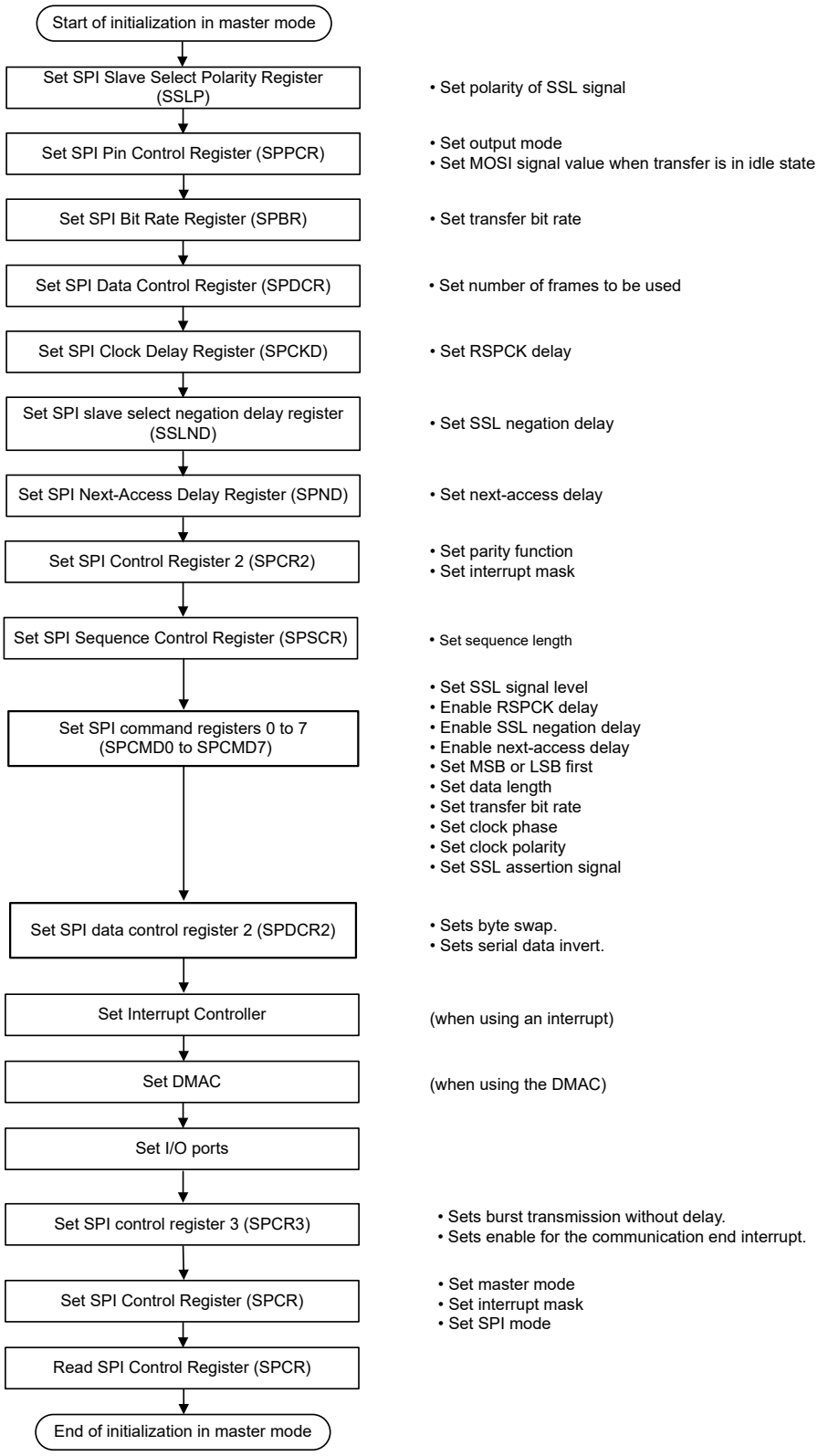

Figure 31.50 Example of initialization flow in master mode for SPI operation

(9) Software processing flow

Figure 31.51 to Figure 31.53 show examples of the software processing flow.

Transmit processing flow

When transmitting data, with the SPIi_SPII interrupt enabled, the CPU is notified of the completion of data transmission after the last data write for transmission.

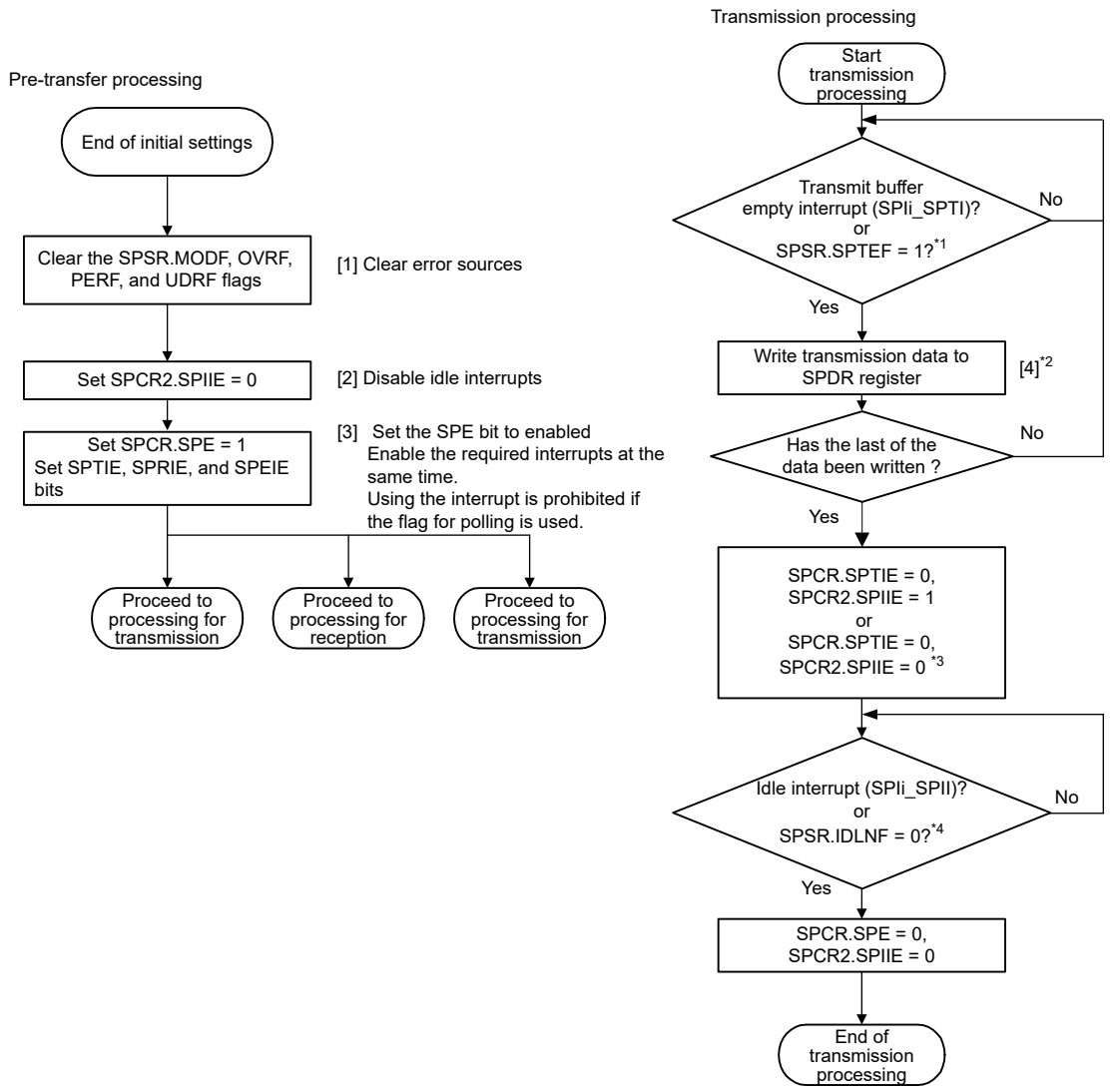

Note 1. Before writing data for transmission to SPDR/SPDR_HA/SPDR_BY, check that the transmit buffer is empty by reading the SPSR.SPTEF flag, if the flag for polling is used.
Note 2. Setting SPCR2.SPIIE and SPCR3.CENDIE to 0 is prohibited if the flag for polling is used.
Note 3. Wait more than 1 PCLKA, after writing data for transmission to SPDR register, and before starting to poll SPSR.IDLNF flag or SPSR.CENDF, if the flag for polling is used.
Note 4. SPDR = SPDR/SPDR_HA/SPDR_BY
Access when interrupt handling routine is executed once to the number of frames set in SPDCR.SPFC[1:0] bits.

Figure 31.51 Transmission flow in master mode

Receive processing flow

The SPI has receive only operation in slave mode.

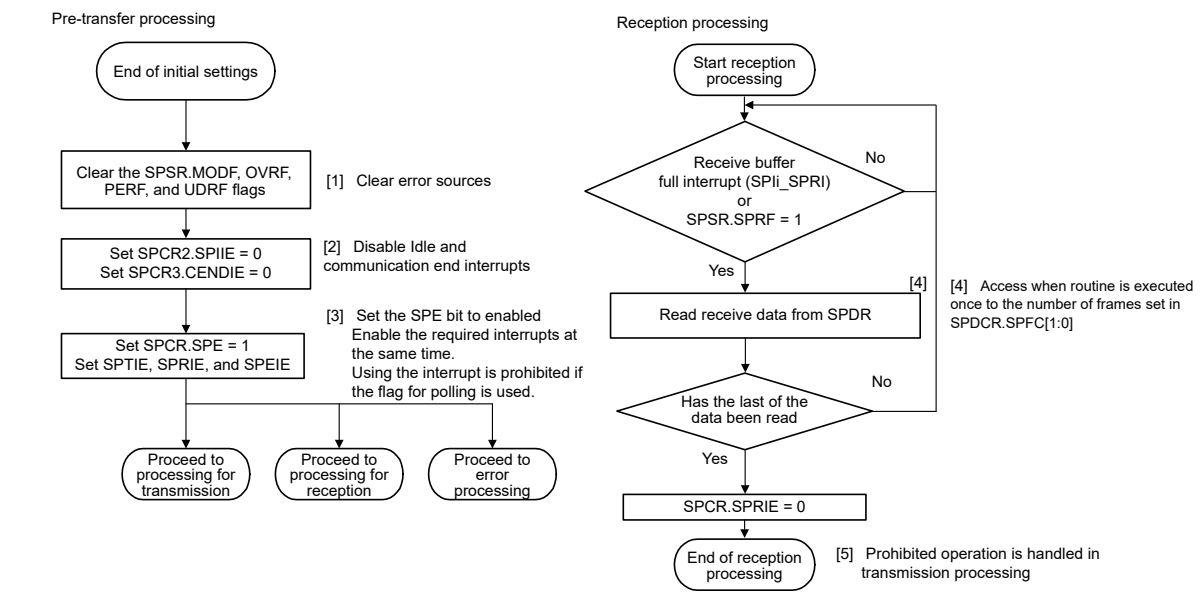

Note 1. SPDR = SPDR/SPDR_HA/SPDR_BY

Figure 31.52 Reception flow in master mode

Error processing flow

The SPI detects the following errors:

- Mode fault error
- Underrun error
- Overrun error
- Parity error

When a mode fault error is generated, the SPCR.SPE bit is automatically cleared, stopping operations for transmission and reception. For errors from other sources, the SPCR.SPE bit is not cleared and operations for transmission and reception continue. Therefore, Renesas recommends clearing the SPCR.SPE bit to stop operations for errors other than mode fault errors. Not doing so leads to updating of the SPSSR.SPECM[2:0] bits.

When an error is detected using an interrupt, clear the ICU.IELSRn.IR flag in the error processing routine. If this is not done, the ICU.IELSRn.IR flag might continue to indicate the SPIi_SPTI or SPIi_SPRI interrupt request. If the SPIi_SPRI interrupt request is indicated, read the receive buffer and initialize the sequencer in the SPI.

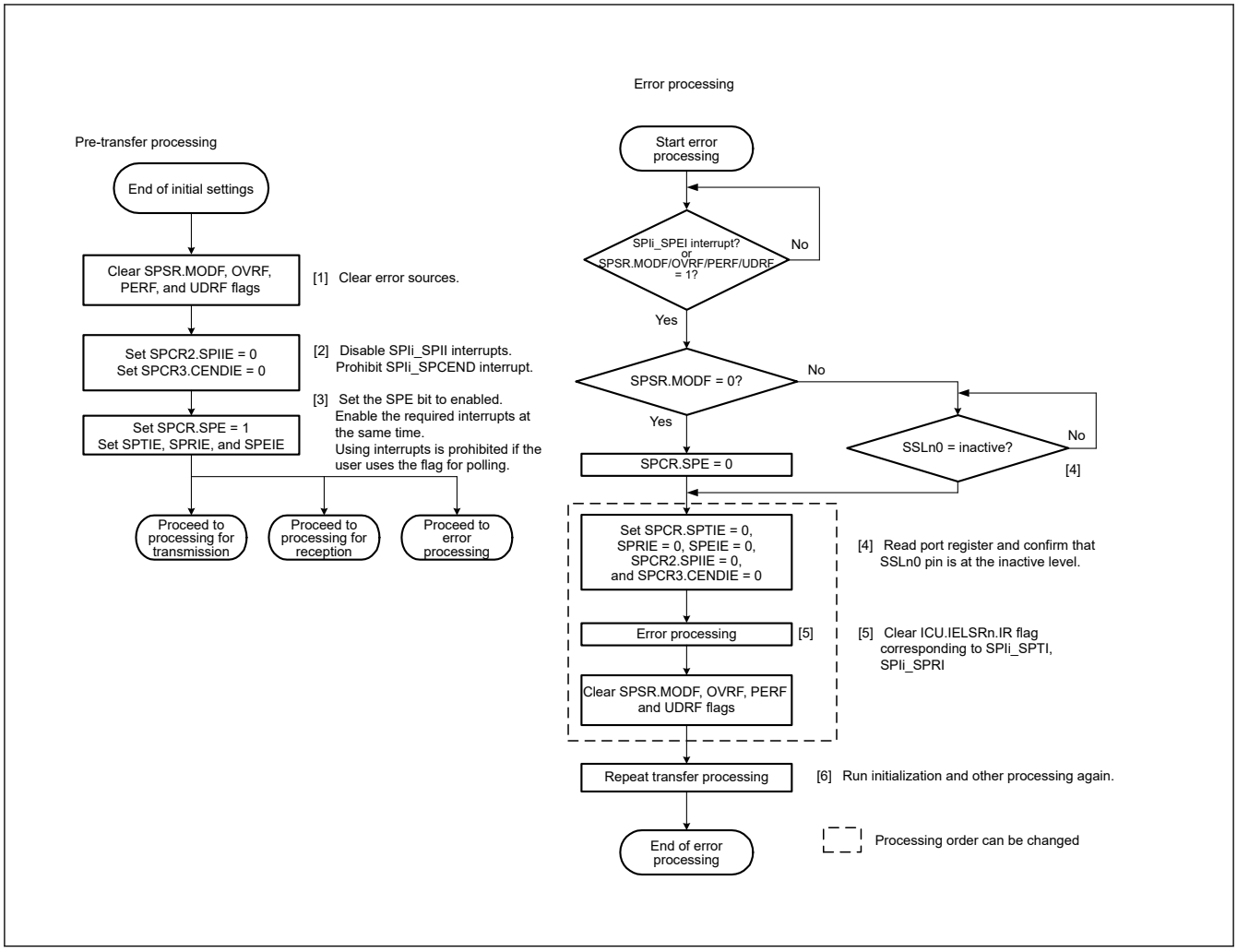

Figure 31.53 Error processing flow in master mode

31.3.12.2 Slave mode operation

(1) Starting a serial transfer

When the SPCMD0.CPHA bit is 0, if the SPI detects an SSLn0 input signal assertion, it must drive valid data to the MISOn output signal. For this reason, when the CPHA bit is 0, the assertion of the SSLn0 input signal triggers the start of a serial transfer.

When the CPHA bit is 1, if the SPI detects the first RSPCKn edge in an SSLn0 signal asserted condition, it must drive valid data to the MISOn output signal. For this reason, when the CPHA bit is 1, the first RSPCKn edge in an SSLn0 signal asserted condition triggers the start of a serial transfer.

Regardless of the CPHA bit setting, the SPI drives the MISOn output signal on SSLn0 signal assertion. The data that is output by the SPI is either valid or invalid, depending on the CPHA bit setting.

For details on the SPI transfer format, see section 31.3.5. Transfer Formats. The polarity of the SSLn0 input signal depends on the SSLP.SSL0P setting.

(2) Terminating a serial transfer

Regardless of the SPCMD0.CPHA bit setting, the SPI terminates the serial transfer after detecting an RSPCKn edge corresponding to the final sampling timing. When free space is available in the receive buffer (the SPSR.SPRF flag is 0), on termination of serial transfer, the SPI copies received data from the shift register to the receive buffer of the SPDR/SPDR_HA register. On termination of a serial transfer, the SPI changes the status of the shift register to empty, regardless of the receive buffer state. A mode fault error occurs if the SPI detects an SSLn0 input signal negation from the beginning of serial transfer to the end of serial transfer (see section 31.3.10. Error Detection).

The final sampling timing changes depending on the bit length of transfer data. In slave mode, the SPI data length is determined by the SPCMD0.SPB[3:0] bits setting. The polarity of the SSLn0 input signal is determined by the SSLP.SSL0P bit setting. For details on the SPI transfer format, see section 31.3.5. Transfer Formats.

(3) Notes on single-slave operations

If the SPCMD0.CPHA bit is 0, the SPI starts serial transfers when it detects the assertion edge for an SSLn0 input signal. In the configuration shown in Figure 31.7, if the SPI is used in single-slave mode, the SSLn0 signal is fixed at an active state. Therefore, when the CPHA bit is set to 0, the SPI cannot correctly start a serial transfer. For the SPI to correctly execute transmit and receive operations in slave mode when the SSLn0 input signal is fixed at an active state, the CPHA bit must be set to 1. Do not fix the SSLn0 input signal if there is a requirement for setting the CPHA bit to 0.

(4) Burst transfer

If the SPCMD0.CPHA bit is 1, continuous serial transfer (burst transfer) can be executed while retaining the assertion state for the SSLn0 input signal. When the CPHA bit is 1, the serial transfer period is the period from the first RSPCKn edge to the sampling timing for the reception of the final bit in an SSLn0 signal active state. Even when the SSLn0 input signal remains at the active level, the SPI can accommodate burst transfers, because it can detect the start of an access.

When the CPHA bit is 0, the second and subsequent serial transfers during burst transfer cannot be executed correctly.

(5) Initialization flow

Figure 31.54 shows an example of initialization flow for SPI operation when the SPI is in slave mode. For a description of how to set up the ICU, DTC, and I/O ports, see the descriptions given in the individual blocks.

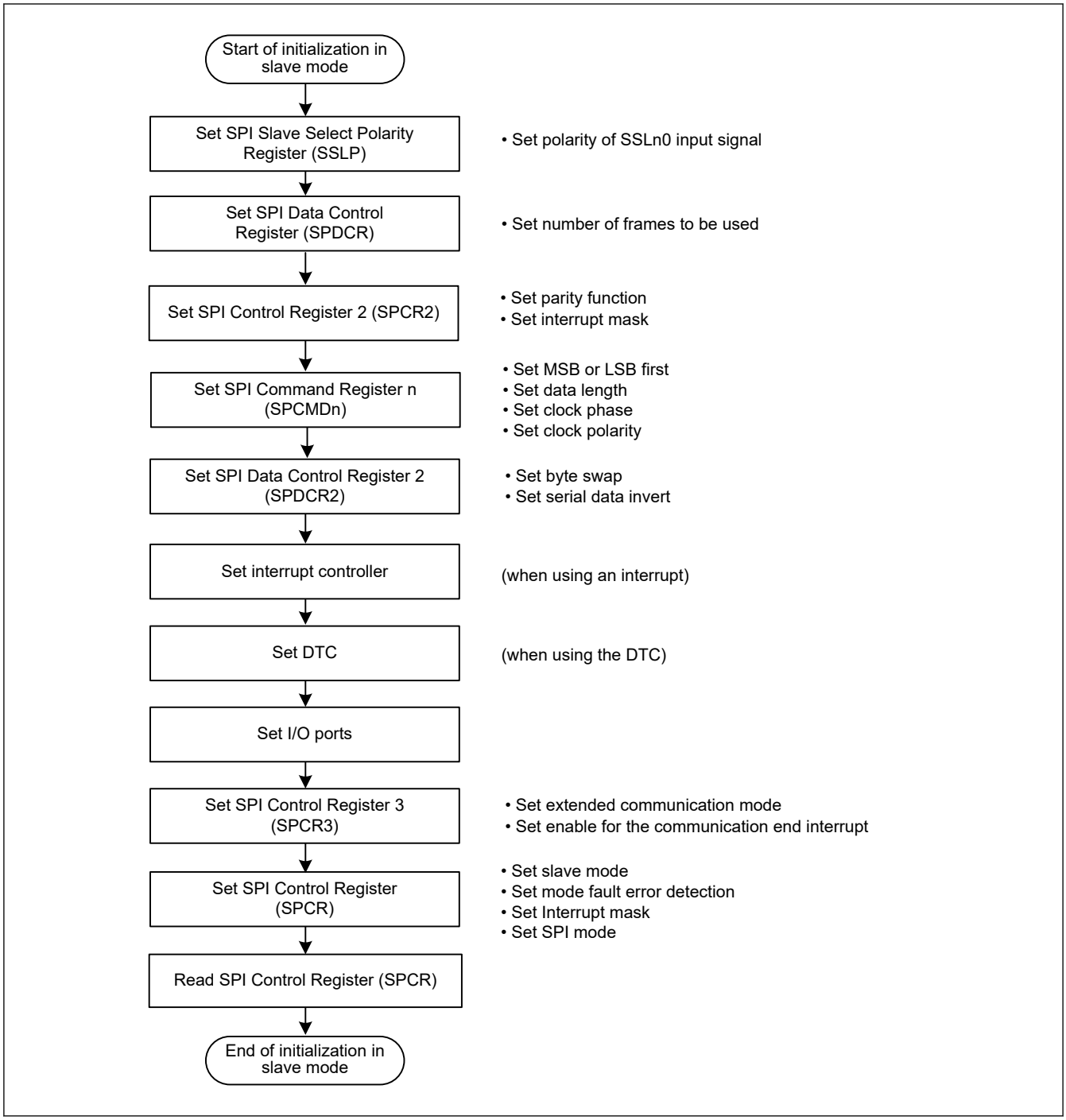

Figure 31.54 Example initialization flow in slave mode for SPI operation

(6) Software processing flow

Figure 31.55 to Figure 31.57 show examples of the flow of software processing.

Transmit processing flow

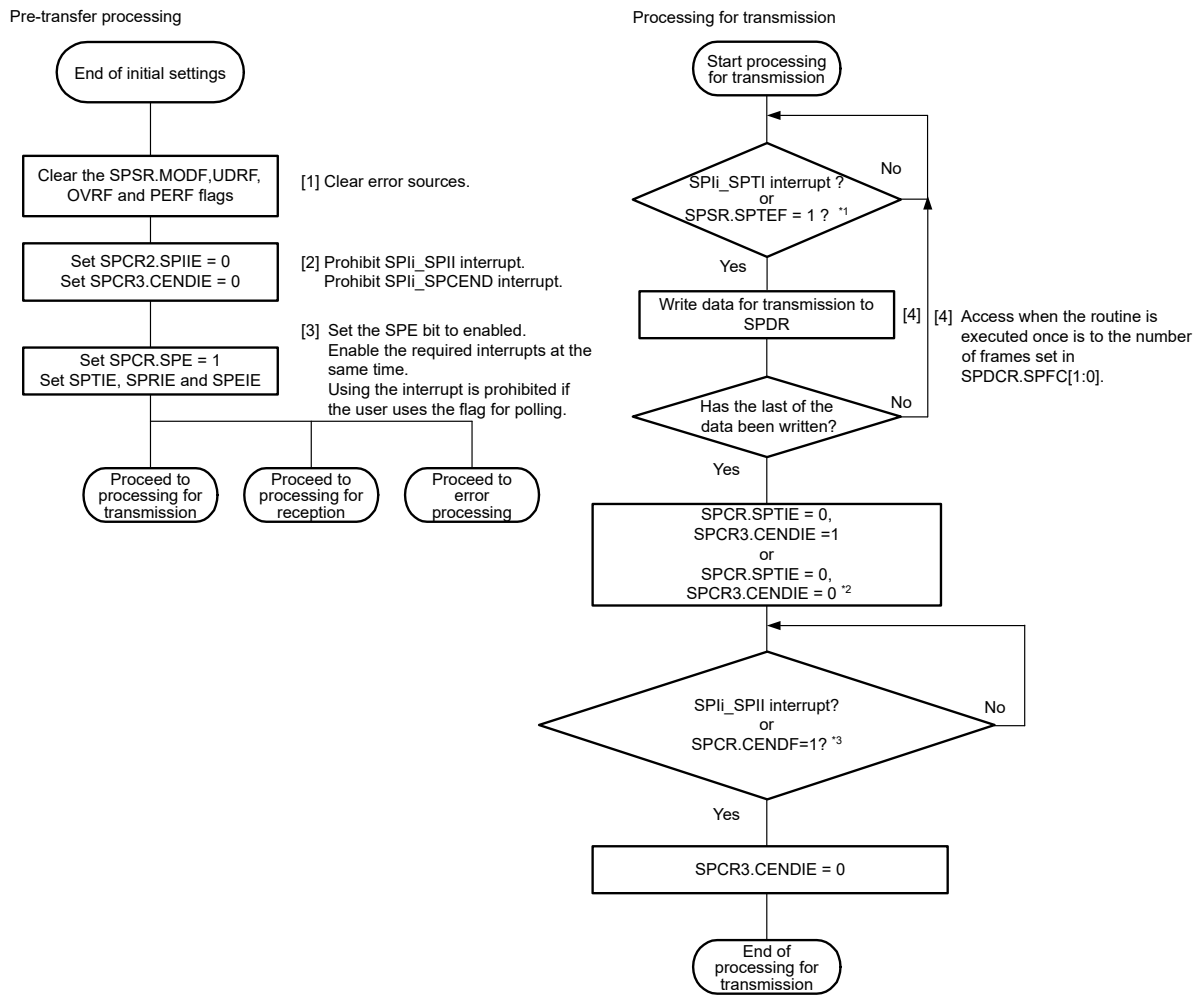

Note 1. Before writing data for transmission to SPDR register, check the transmit buffer empty by reading SPSR.SPTEF flag, if the flag for polling is used.
Note 2. Set SPIi_SPCEND interrupt prohibited (SPCR3.CENDIE = 0), if the user uses the flag for polling.
Note 3. Wait more than 1 PCLK, after writing data for transmission to SPDR, and before starting polling of SPSR.IDLNF or SPSR.CENDF, if the user uses the flag for polling.

Figure 31.55 Transmission flow in slave mode

Receive processing flow

The SPI does not handle receive-only operation, so processing for transmission is required.

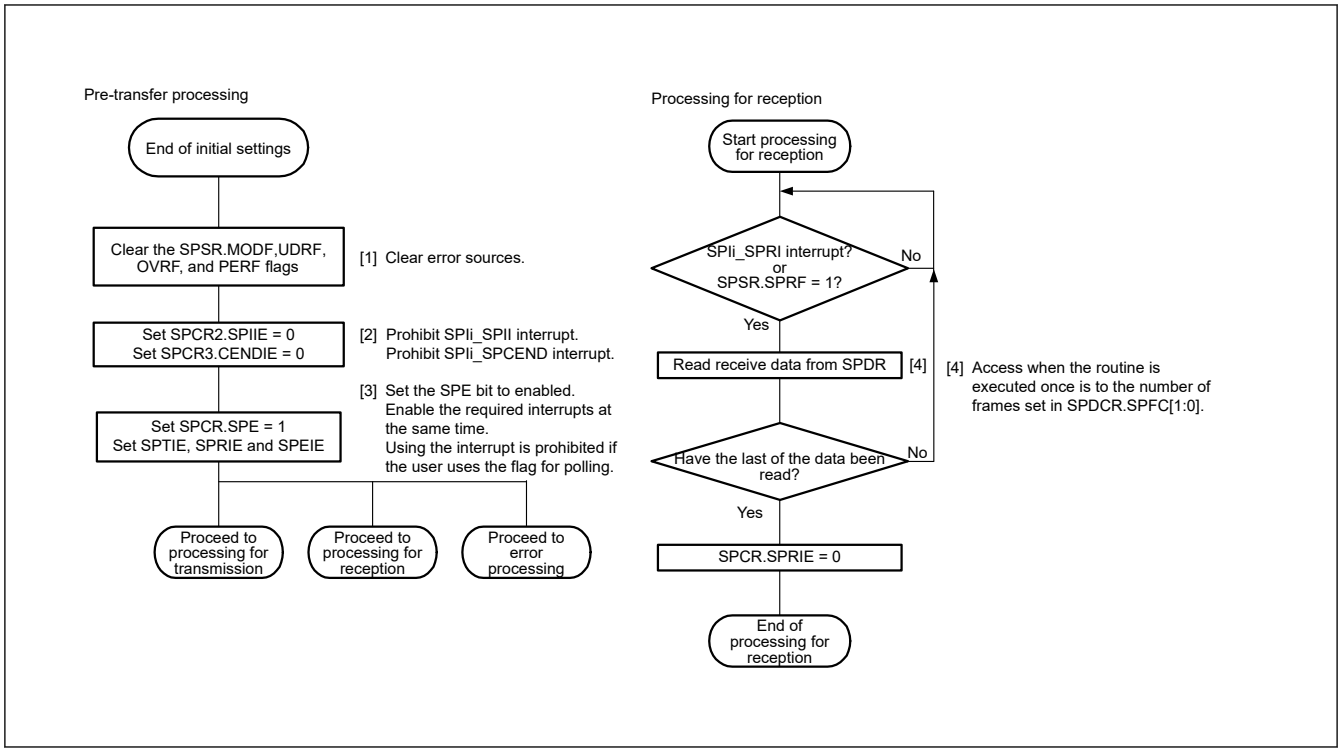

Figure 31.56 Reception flow in slave mode

Error processing flow

In slave mode operation, even when a mode fault error is generated, the SPSR.MODF flag can be cleared regardless of the state of the SSLn0 pin.

When an error is detected by using an interrupt, clear the ICU.IELSRn.IR flag in the error processing routine. If this is not done, the ICU.IELSRn.IR flag might continue to indicate the SPIi_SPTI or SPIi_SPRI interrupt request. If the SPIi_SPRI interrupt request is indicated, read the receive buffer and initialize the sequencer in the SPI.

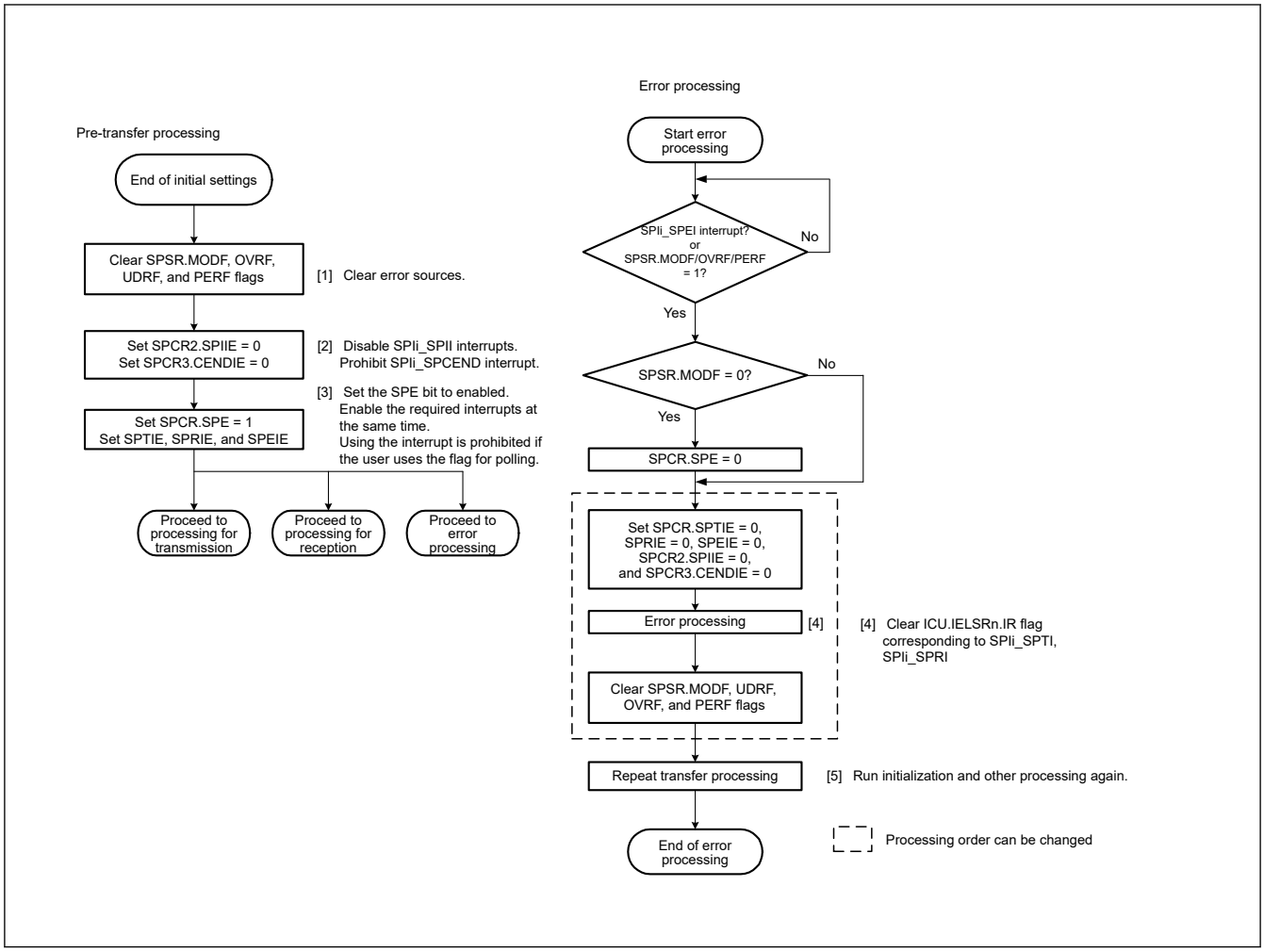

Figure 31.57 Error processing flow for slave mode

31.3.13 Clock Synchronous Operation

Setting the SPCR.SPMS bit to 1 selects clock synchronous operation of the SPI. In clock synchronous operation, the SSLni pin is not used, and the RSPCKn, MOSIn, and MISOn pins handle communications. All SSLni pins are available as I/O port pins.

Although clock synchronous operation does not require the use of the SSLni pin, operation of the module is the same as in SPI operation. In both master mode and slave mode operations, communications can be performed with the same flow as in SPI operation. However, mode fault errors are not detected, because the SSLni pin is not used.

Additionally, do not perform operation if clock synchronous operation is enabled when the SPCMDm.CPHA bit is set to 0 in slave mode (SPCR.MSTR = 0).

31.3.13.1 Master mode operation

(1) Starting serial transfer

The SPI updates the data in the transmit buffer (SPTX) of SPDR/SPDR_HA when data is written to the SPDR/SPDR_HA register with the transmit buffer empty, the data for the next transfer not set and the SPSR.SPTEF flag is 1. When the shift register is empty after the number of frames set in the SPDCR.SPFC[1:0] bits are written to the SPDR/SPDR_HA, the SPI copies data from the transmit buffer to the shift register and starts serial transmission. On copying transmit data to the shift register, the SPI changes the status of the shift register to full, and on termination of serial transfer, it changes the status of the shift register to empty. The status of the shift register cannot be referenced.

Transfer in clock synchronous operation is conducted without the SSLn0 output signal. For details on the SPI transfer format, see section 31.3.5. Transfer Formats.

(2) Terminating serial transfer

The SPI terminates the serial transfer after transmitting an RSPCKn edge corresponding to the sampling timing. If free space is available in the receive buffer (the SPSR.SPRF flag is 0), on termination of serial transfer, the SPI copies data from the shift register to the receive buffer of the SPI Data Register (SPDR/SPDR_HA).

The final sampling timing varies depending on the bit length of transfer data. In master mode, the SPI data length depends on the SPCMDm.SPB[3:0] bits setting. Transfer in clock synchronous operation is conducted without the SSLn0 output signal. For details on the SPI transfer format, see section 31.3.5. Transfer Formats.

(3) Sequence control

The transfer format used in master mode is determined by the SPSCR, SPCMDm, SPBR, SPCKD, SSLND, and SPND registers. Although the SSLni signals are not output in clock synchronous operation, these settings are valid.

The SPSCR register determines the sequence configuration for serial transfers that are executed by the SPI in master mode. The following parameters are specified in the SPCMDm register:

- SSLni output signal value
- MSB or LSB first
- Data length
- Some of the bit rate settings
- RSPCKn polarity and phase
- Whether SPCKD is to be referenced
- Whether SSLND is to be referenced
- Whether SPND is to be referenced

SPBR holds some of the bit rate settings such as SPCKD, an SPI clock delay value, SSLND, an SSL negation delay, and SPND, a next-access delay value.

Based on the sequence length that is assigned to SPSCR, the SPI makes up a sequence comprised of a part or all of SPCMDm register. The SPI contains a pointer to the SPCMDm register that makes up the sequence. The value of this pointer can be checked by reading the SPSSR.SPCP[2:0] bits. When the SPCR.SPE bit is set to 1 and the SPI function is enabled, the SPI loads the pointer to the commands in SPCMD0 register, and incorporates the SPCMD0 register setting into the transfer format at the beginning of serial transfer. The SPI increments the pointer each time the next-access delay period for a data transfer ends. On completion of the serial transfer that corresponds to the final command comprising the sequence, the SPI sets the pointer to the SPCMD0 register, and in this manner the sequence is executed repeatedly.

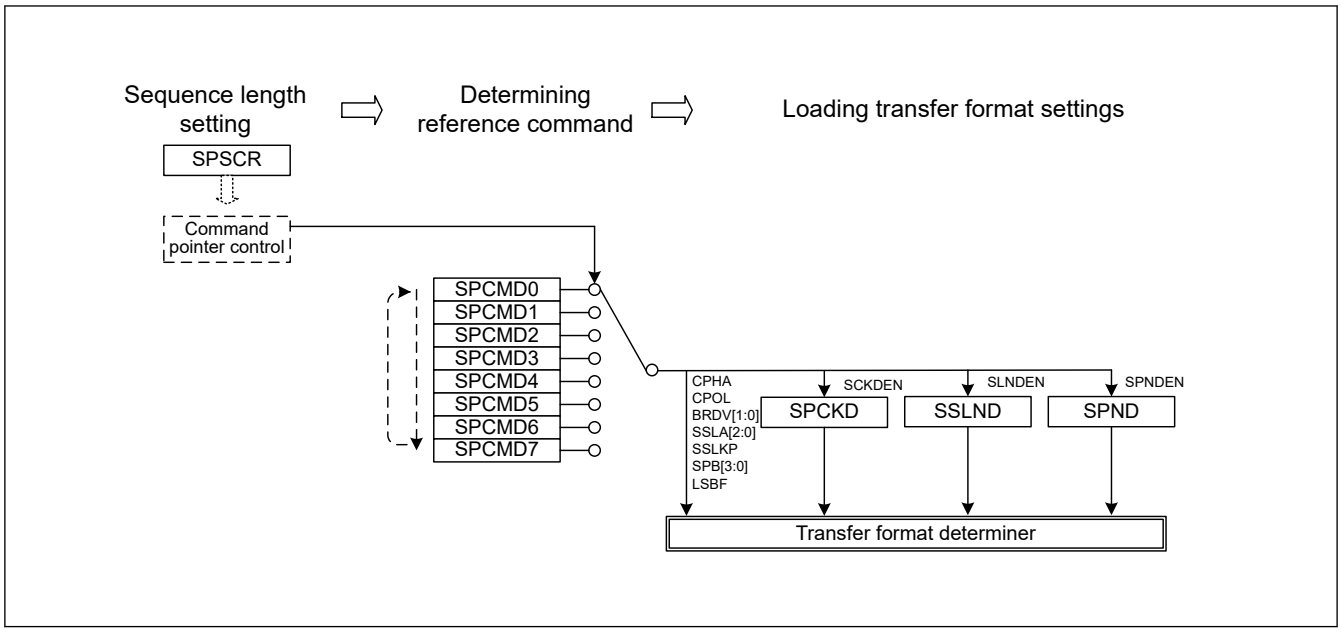

Figure 31.58 Procedure for determining the form of serial transmission in master mode

In this section, a frame is the combination of the data (SPDR/SPDR_HA) and the settings (SPCMDm).

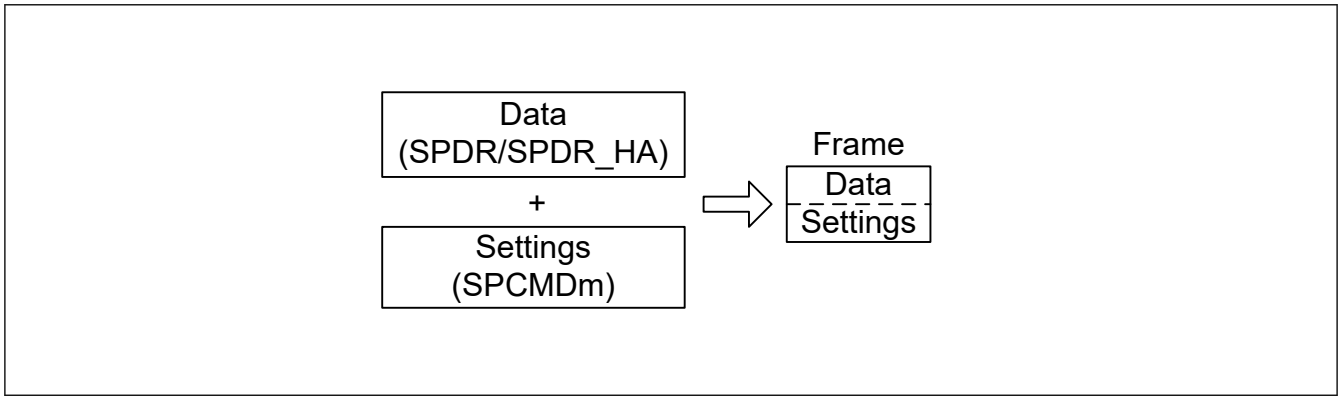

Figure 31.59 Conceptual diagram of frames

Figure 31.60 shows the relationship between the command and the transmit and receive buffers in the sequence of operations specified by the settings in Table 31.4.

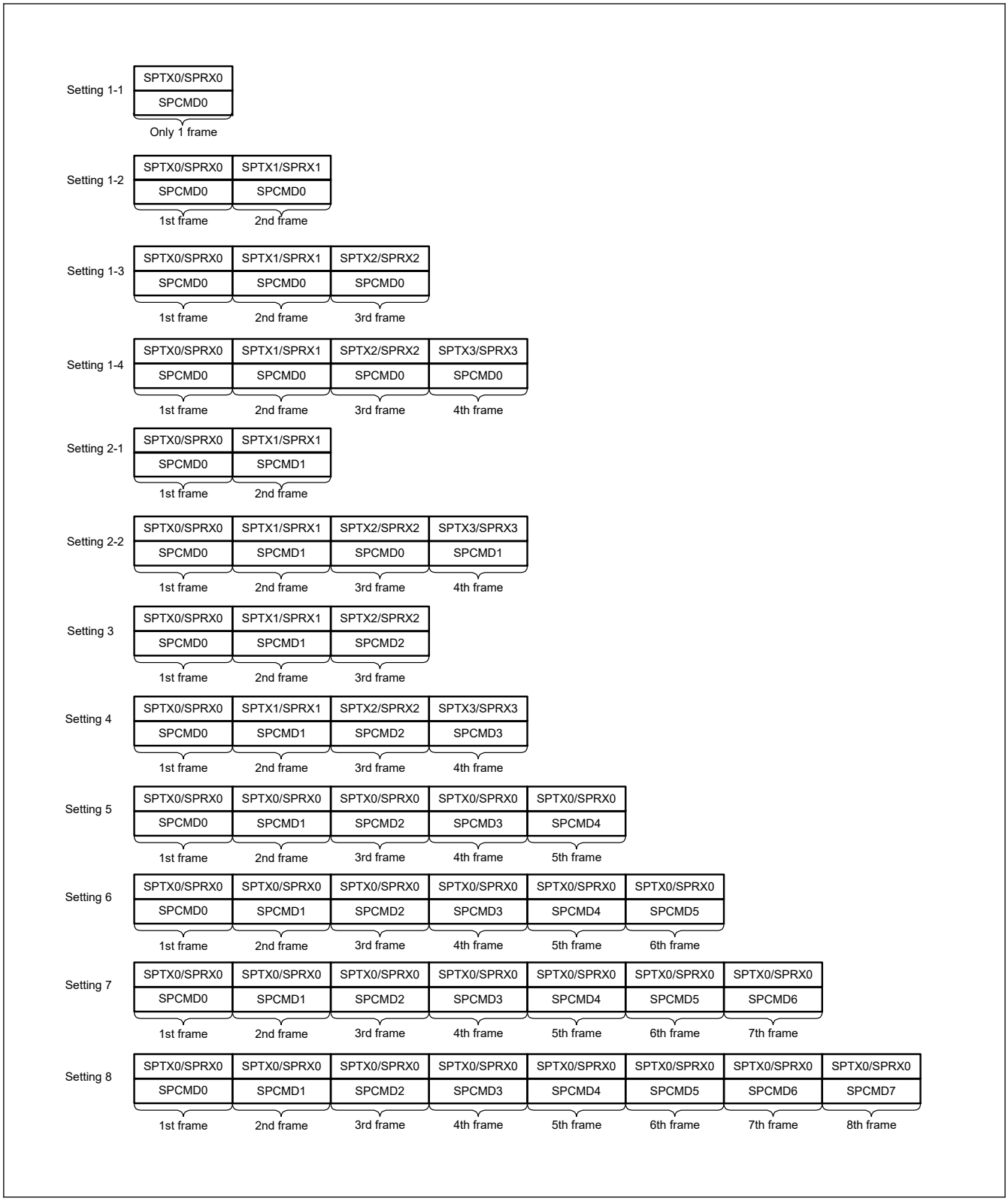

Figure 31.60 Correspondence between SPI Command Register and transmit and receive buffers in sequence operations

(4) Initialization flow

Figure 31.61 shows an example of initialization flow for clock synchronous operation when the SPI is used in master mode. For information on how to set up the ICU, DMAC or DTC, and I/O ports, see the descriptions given in the individual blocks.

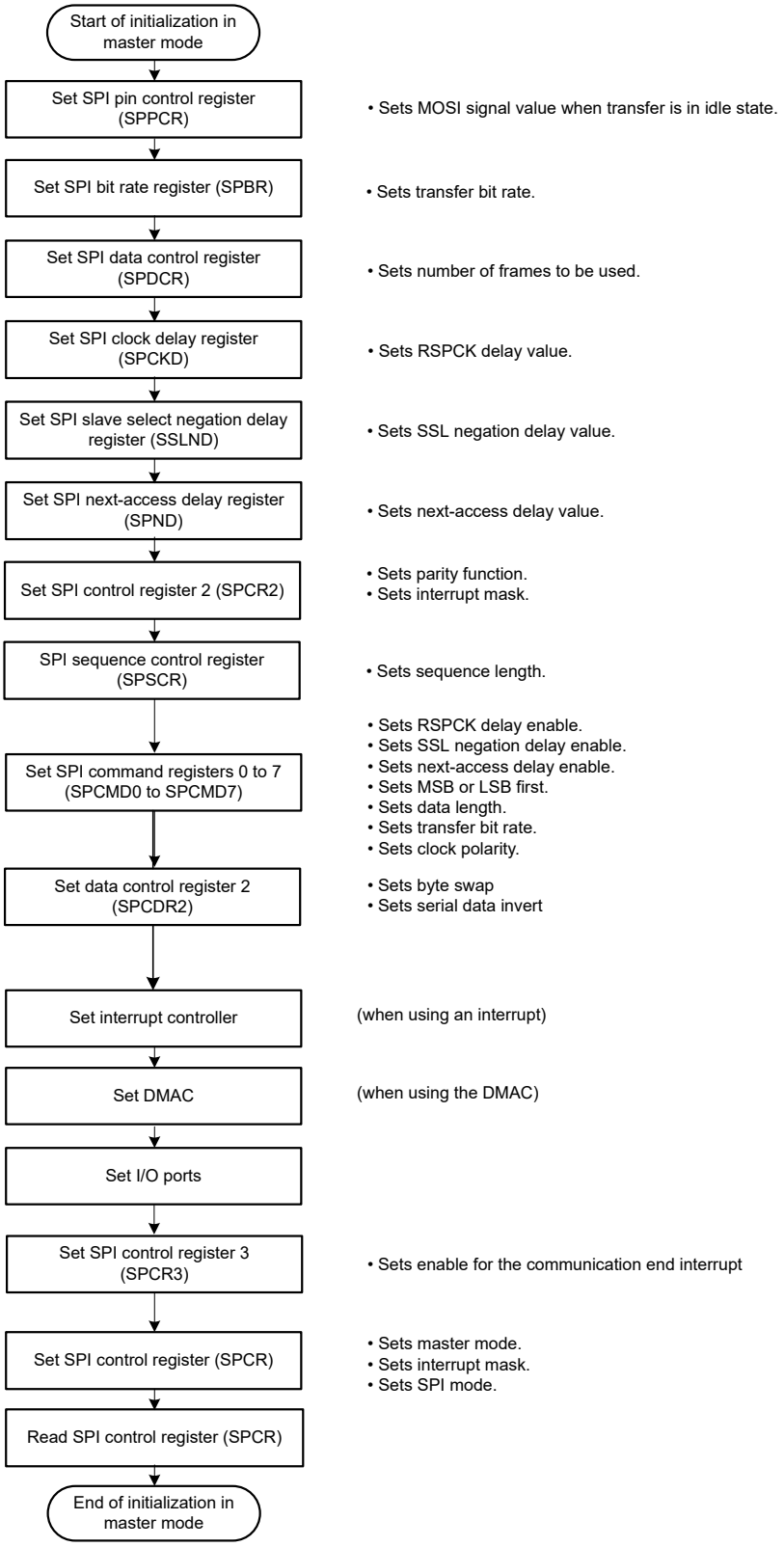

Figure 31.61 Example of initialization flow in master mode for clock synchronous operation

(5) Software processing flow

Software processing during clock synchronous master operation is the same as that for SPI master operation. For details, see (9) Software processing flow in section 31.3.12.1. Master mode operation. Mode fault errors do not occur in clock synchronous operation.

31.3.13.2 Slave mode operation

(1) Starting serial transfer

When the SPCR.SPMS bit is 1, the first RSPCKn edge triggers the start of a serial transfer in the SPI, and the SPI drives the MISOn output signal. The SSL0 input signal is not used in clock synchronous operation. For details on the SPI transfer format, see section 31.3.5. Transfer Formats.

(2) Terminating serial transfer

The SPI terminates the serial transfer after detecting an RSPCKn edge corresponding to the final sampling timing. When free space is available in the receive buffer (the SPSR.SPRF flag is 0), on termination of serial transfer, the SPI copies received data from the shift register to the receive buffer of the SPDR/SPDR_HA register. On termination of a serial transfer, the SPI changes the status of the shift register to empty regardless of the receive buffer.

The final sampling timing changes depending on the bit length of transfer data. In slave mode, the SPI data length depends on the SPCMD0.SPB[3:0] bits setting. For details on the SPI transfer format, see section 31.3.5. Transfer Formats.

(3) Initialization flow

Figure 31.62 shows an example of initialization flow for clock synchronous operation when the SPI is used in slave mode. For a description of how to set up the ICU, DTC, and I/O ports, see the descriptions given in the individual blocks.

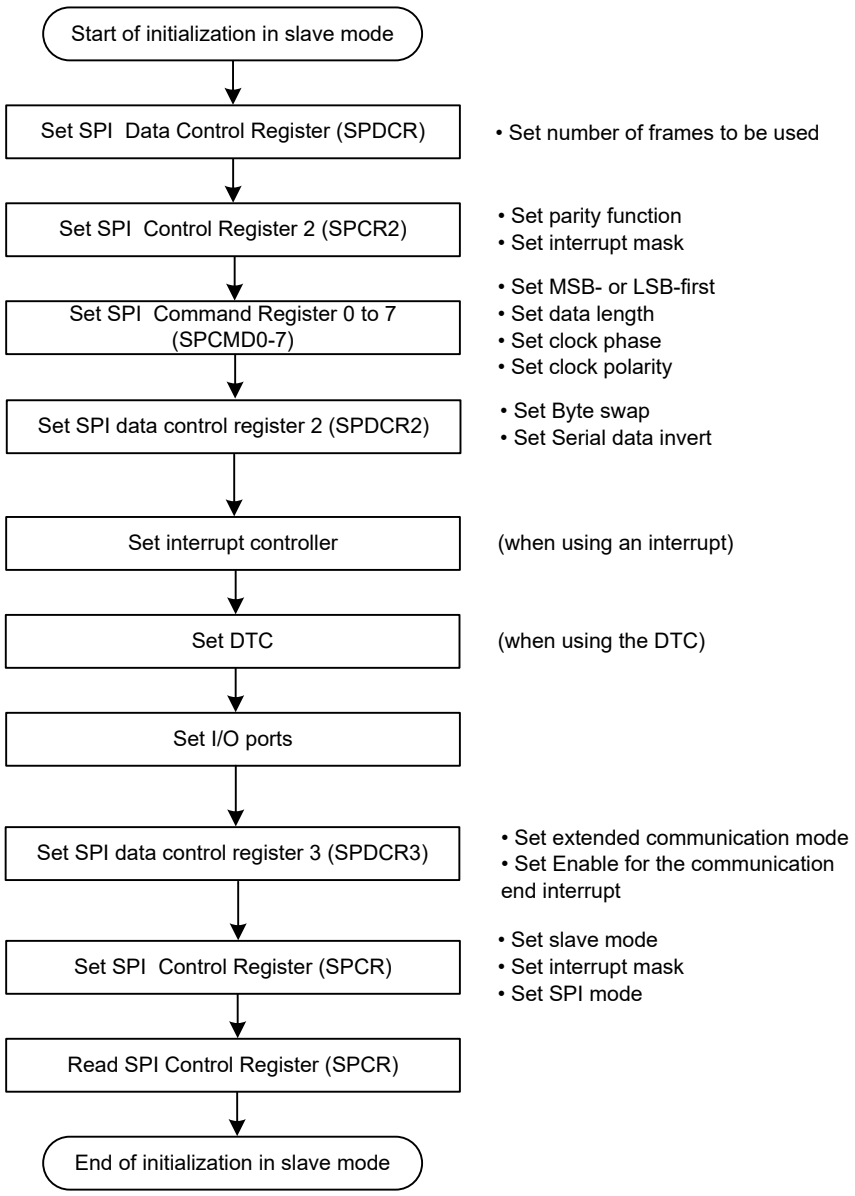

Figure 31.62 Example of initialization flow in slave mode for clock synchronous operation

(4) Software processing flow

Software processing during clock synchronous slave operation is the same as that for SPI slave operation. For details, see (6) Software processing flow. Mode fault errors do not occur in clock synchronous mode.

31.3.14 Loopback Mode

When 1 is written to the SPPCR.SPLP2 bit or SPPCR.SPLP bit, the SPI shuts off the path between the MISOn pin and the shift register if the SPCR.MSTR bit is 1, or between the MOSIn pin and the shift register if the SPCR.MSTR bit is 0, and connects the input and output paths of the shift register, establishing a loopback mode. The SPI does not shut off the path between the MOSIn pin and the shift register if the SPCR.MSTR bit is 1, or between the MISOn pin and the shift register if the SPCR.MSTR bit is 0. This is called loopback mode. When a serial transfer is executed in loopback mode, the transmit data for the SPI or the reversed transmit data becomes the received data for the SPI.

Table 31.14 lists the relationship between the SPLP2 and SPLP bits and the received data. Figure 31.63 shows the configuration of the shift register I/O paths when the SPI in master mode is set to loopback mode (SPPCR.SPLP2 = 0, SPPCR.SPLP = 1).

Table 31.14 SPLP2 and SPLP bit settings and received data

SPPCR.SPLP2 bit	SPPCR.SPLP bit	Received data
0	0	Input data from the MOSIn pin or MISOn pin
0	1	Inverted transmit data
1	0	Transmit data
1	1	Transmit data

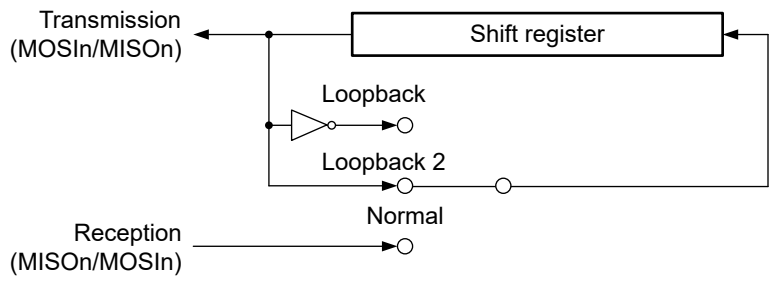

Figure 31.63 Configuration of shift register I/O paths in loopback mode for master mode

31.3.15 Self-Diagnosis of Parity Bit Function

The parity circuit consists of a parity bit adding unit used for transmit data and an error detecting unit used for received data. To detect defects in the parity bit adding unit and error detecting unit, the parity circuit performs self-diagnosis as shown in Figure 31.64.

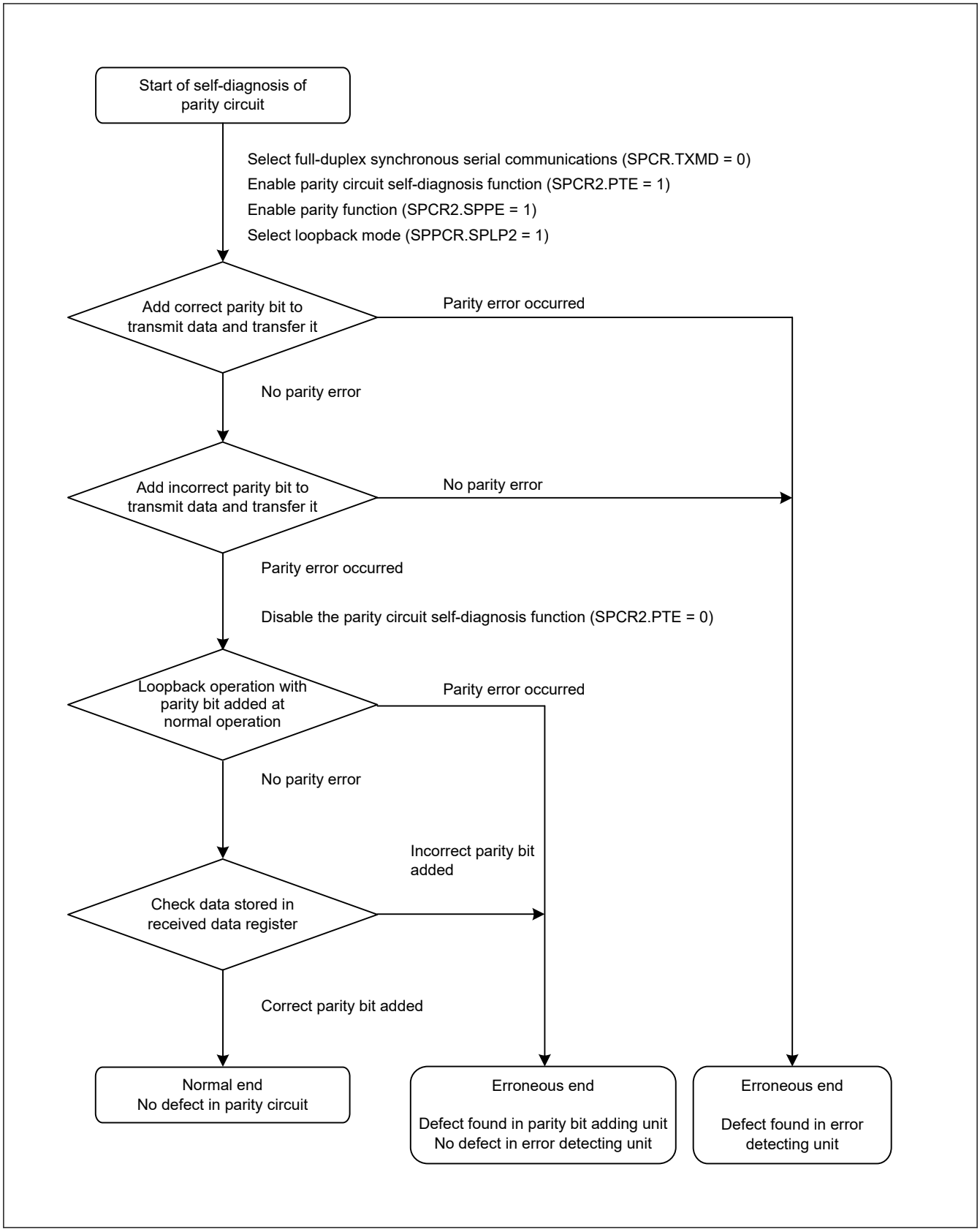

Figure 31.64 Self-diagnosis flow for parity circuit

31.3.16 Interrupt Sources

The SPI has the following interrupt sources:

- Receive buffer full
- Transmit buffer empty
- SPI error (mode-fault, underrun, overrun, or parity error)
- SPI idle
- Communication-end

The DMAC or DTC can be activated by the receive buffer full or transmit buffer empty interrupt to perform data transfer.

Because the vector address for the SPIi_SPEI (SPI error interrupt) is allocated to interrupt requests on mode-fault, underrun, overrun, and parity errors, the actual interrupt source must be determined from the flags. Interrupt sources for the SPI are listed in Table 31.15. An interrupt is generated on satisfaction of one of the interrupt conditions in Table 31.15. Clear the receive buffer full and transmit buffer empty sources through a data transfer.

When using the DMAC or DTC to perform data transmission and reception, you must first set up the DMAC or DTC to be in a transfer-enabled status before setting the SPI. For information on setting up the DMAC or DTC, see section 15, DMA Controller (DMAC) and section 16, Data Transfer Controller (DTC).

If the conditions for generating a transmit buffer empty or receive buffer full interrupt occur while the ICU.IELSRn.IR flag is 1, the interrupt is not output as a request for the ICU but is retained internally (the capacity for retention is one request per source). A retained interrupt request is output when the ICU.IELSRn.IR flag becomes 0. A retained interrupt request is automatically discarded when it is output as an actual interrupt request. The interrupt enable bit (the SPCR.SPTIE or SPCR.SPRIE bit) for an internally retained interrupt request can also be set to 0.

Table 31.15 SPI interrupt sources

Interrupt source	Symbol	Interrupt condition	DTC/DMAC activation
Receive buffer full	SPIi_SPRI	The receive buffer becomes full (SPSR.SPRF flag is 1) while the SPCR.SPRIE bit is 1	Possible
Transmit buffer empty	SPIi_SPTI	The transmit buffer becomes empty (SPSR.SPTEF flag is 1) while the SPCR.SPTIE bit is 1	Possible
SPI error (mode-fault, underrun, overrun, or parity error)	SPIi_SPEI	The SPSR.MODF, OVRF, UDRF or PERF flag sets to 1 while the SPCR.SPEIE bit is 1	Impossible
SPI idle	SPIi_SPII	The SPSR.IDLNF flag sets to 0 while the SPCR2.SPIIE bit is 1	Impossible
Communication-end	SPIi_SPCEND	CENDIE = 1 and CENDF = 1	Impossible

31.4 Event Link Controller Event Output

The Event Link Controller (ELC) can produce the following event output signals:

- Receive buffer full event output
- Transmit buffer empty event output
- Mode-fault, underrun, overrun, or parity error event output
- SPI idle event output
- Transmission-completed event output

The event link output signal is output regardless of the interrupt enable bit setting.

31.4.1 Receive Buffer Full Event Output

This event signal is output when received data is transferred from the shift register to the SPDR/SPDR_HA on completion of serial transfer.

31.4.2 Transmit Buffer Empty Event Output

This event signal is output when data for transmission is transferred from the transmit buffer to the shift register and when the value of the SPE bit changes from 0 to 1.

31.4.3 Mode-Fault, Underrun, Overrun, or Parity Error Event Output

This event signal is output when mode-fault, underrun, overrun, or parity error is detected. See section 31.5.4. Constraints on Mode-Fault, Underrun, Overrun, or Parity Error Event Output if using this event signal.

(1) Mode-fault

Table 31.16 lists the conditions for occurrence of a mode-fault event.

Table 31.16 Conditions for mode-fault occurrence

SPI mode	SPCR.MODFEN bit	SSLn0 pin	Remarks
SPI operation (SPMS = 0) Slave (SPCR.MSTR = 0)	1	Not active	Event is output only when the SSLn0 pin is deactivated during transmission

(2) Underrun

This event signal is output in response to an underrun when a serial transfer starts while the transmission data is not ready, and the value of the SPCR.MSTR bit is 0 and the SPCR.SPE bit is 1. Under these conditions, the MODF and UDRF flags are set to 1.

(3) Overrun

This event signal is output in response to an overrun when a serial transfer completes while the receive buffer contains unread data and the value of the SPCR.TXMD bit is 0. Under these conditions, the OVRF flag is set to 1.

(4) Parity error

This event signal is output in response to a parity error detected on completion of a serial transfer while the value of the TXMD bit in SPCR is 0 and the value of the SPPE bit in SPCR2 is 1.

31.4.4 SPI Idle Event Output

(1) In master mode

In master mode, an event is output when the condition for setting the IDLNF flag (SPI idle flag) to 0 is satisfied.

(2) In slave mode

In slave mode, an event is output when the SPCR.SPE bit is set to 0 (SPI is initialized).

31.4.5 Communication End Event Output

In master mode, an event is output when the IDLNF flag (SPI idle flag) changes from 1 to 0. In slave mode, an event occurs with conditions shown in Table 31.17 and Table 31.18

Table 31.17 Communication End Event Generating Conditions (transmit-receive/transmit slave mode)

	Transmit Buffer Status	Shift Register Status	Others
SPI operation (SPMS = 0)	Empty	Empty	SSL0 input is negated
Clock synchronous operation (SPMS = 1)	Empty	Empty	The last even edge of RSPCK of last data was detected (CPHA = 1)

Table 31.18 Communication End Event Generating Conditions (receive only slave mode)

	Others
SPI operation (SPMS = 0)	SSL0 input is negated
Clock synchronous operation (SPMS = 1)	The last even edge of RSPCK of last data was detected (CPHA = 1)

Regardless of master mode or slave mode, no event is output when 0 is written to the SPCR.SPE bit during transmission or when the SPCR.SPE bit is cleared due to a mode fault error or an underrun error.

A communication end event is output at the following timing. The communication end event output timing in master operation is omitted because it is output at the same timing as an idle event.

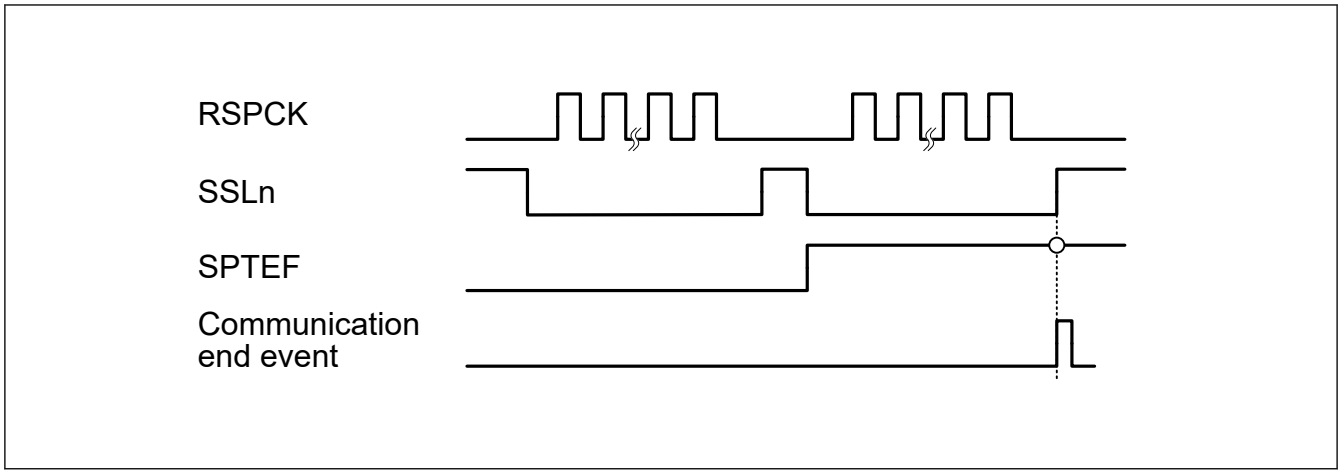

Figure 31.65 Communication End Event Output Timing (Transmit slave mode, SPI Operation)

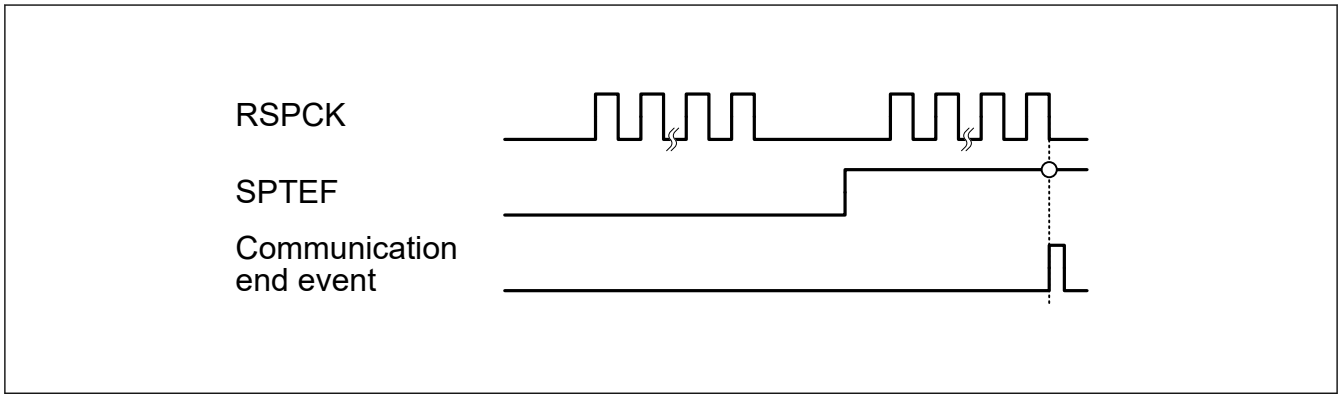

Figure 31.66 Communication End Event Output Timing (Transmit slave mode, Clock Synchronous Operation)

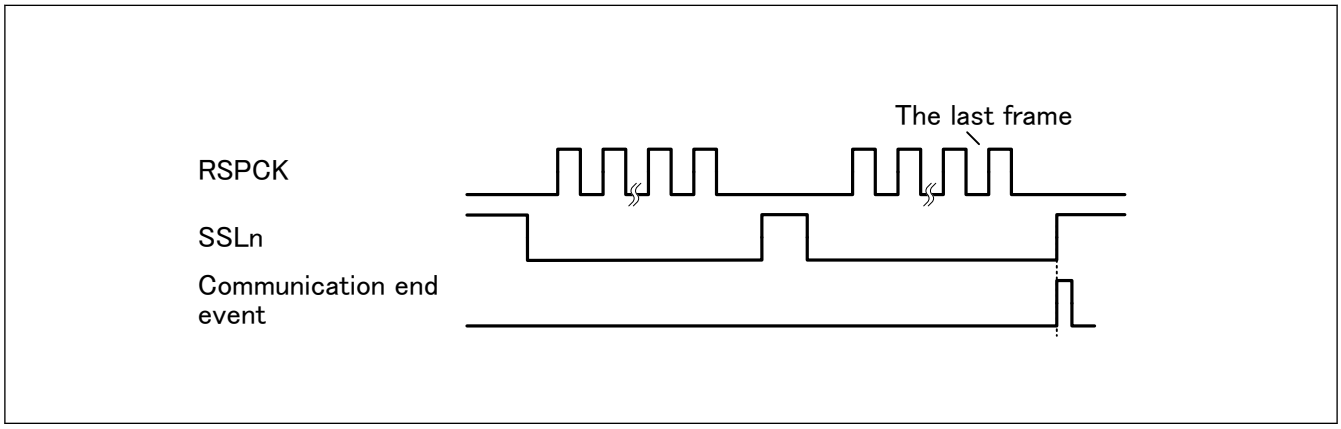

Figure 31.67 Communication End Event Output Timing (Receive only slave mode, SPI Operation)

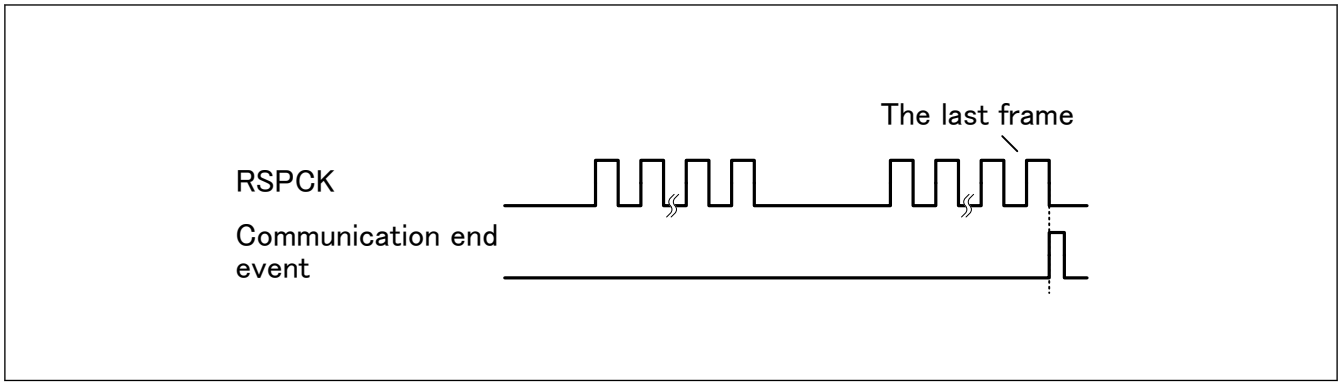

Figure 31.68 Communication End Event Output Timing (Receive only slave mode, Clock Synchronous Operation)

31.5 Usage Notes

31.5.1 Settings for the Module-Stop State

The Module Stop Control Register B (MSTPCRB) can enable or disable the SPI operation. The SPI is initially stopped after reset. Releasing the module-stop state enables access to the registers. For details on the Module Stop Control Register B, see section 10, Low Power Modes.

31.5.2 Constraint on Low-Power Functions

When using the module-stop function and entering a low-power mode other than Sleep mode, set the SPCR.SPE bit to 0 before completing communication.

31.5.3 Constraints on Starting Transfer

If the ICU.IELSRn.IR flag is 1 when transfer starts, the interrupt request is internally retained, which can lead to unanticipated behavior of the ICU.IELSRn.IR flag.

To prevent this, use the following procedure to clear interrupt requests before enabling operations (by setting the SPCR.SPE bit to 1):

1. Confirm that transfer stopped (the SPCR.SPE bit is 0).
2. Set the associated interrupt enable bit (SPCR.SPTIE bit or SPCR.SPRIE bit) to 0.
3. Read the associated interrupt enable bit (SPCR.SPTIE bit or SPCR.SPRIE bit) and confirm that its value is 0.
4. Set the ICU.IELSRn.IR flag to 0.

31.5.4 Constraints on Mode-Fault, Underrun, Overrun, or Parity Error Event Output

Using the mode-fault, underrun, overrun, or parity error event is prohibited if the SPI is in multi-master mode (when the SPCR.SPMS bit is 0, the SPCR.MSTR bit is 1, and the SPCR.MODFEN bit is 1).

31.5.5 Constraints on the SPSR.SPRF and SPSR.SPTEF Flags

If the polling flags, SPRF and SPTEF, are used, using the interrupts is prohibited, and you must set the SPCR.SPRIE and SPCR.SPTIE bits to 0. Either the interrupts or the flags can be used, but not both.

32. Quad Serial Peripheral Interface (QSPI)

32.1 Overview

The QSPI is a memory controller for connecting a serial ROM (nonvolatile memory such as a serial flash memory, serial EEPROM, or serial FeRAM) that has an SPI-compatible interface.

Table 32.1 lists the QSPI specifications, Figure 32.1 shows a block diagram, and Table 32.2 lists the I/O pins.

Table 32.1 QSPI specifications

Parameter	Specifications
Number of channels	1 channel
SPI protocols	● Single SPI protocol, extended SPI protocol to achieve full-duplex communications Note: Standard or fast reading can only be used in single SPI operation. Four-wire communications with the serial flash memory by using the QSSL, QSPCLK, QIO0, and QIO1 pins (QIO0, QSSL, and QSPCLK for output, and QIO1 for input) ● Dual SPI protocol to achieve half-duplex communications Four-wire communications with the serial flash memory by using the QSSL, QSPCLK, QIO0, and QIO1 pins (QSSL and QSPCLK for output, and QIO0 and QIO1 for input and output) ● Quad SPI protocol to achieve half-duplex communications Six-wire communications with the serial flash memory by using the QSSL, QSPCLK, and QIO0 to QIO3 pins (QSSL and QSPCLK for output, and QIO0 to QIO3 for input and output)
SPI mode	● SPI mode 0: The QSPCLK signal is driven low when the SPI bus is not active. ● SPI mode 3: The QSPCLK signal is driven high when the SPI bus is not active.
SPI timing adjustment function	The following settings are possible to suit various types of serial flash memory device: ● SPI bus reference cycle (SFMSKC.SFMDV[4:0]) ● Duty cycle correction (SFMSKC.SFMDTY) ● Adjustment of the number of dummy cycles (SFMSDC.SFMDN[3:0]) ● Minimum width at high level for the QSSL signal (SFMSSC.SFMSW[3:0]) ● QSSL signal setup time (SFMSSC.SFMSLD) ● QSSL signal hold time (SFMSSC.SFMSHD) ● Serial data output enable hold time (SFMSMD.SFMOEX)
ROM access mode	● Support for Standard Read, Fast Read, Fast Read Dual Output, Fast Read Dual I/O, Fast Read Quad Output, and Fast Read Quad I/O instructions ● Substitutable instruction code ● Prefetch function (data are sequentially stored in a buffer after one request without waiting for further requests to read the serial flash memory) ● Polling processing ● SPI bus cycle extension function ● XIP mode (allowing skipping of the reception of an instruction code to read the serial flash memory) Note: ROM access mode is only possible with reading .
Direct communication mode	Flexible support for a wide variety of serial flash memory instructions and functions through software control, including erase, ID read, and power-down control
Interrupt source	Error interrupts
Module-stop function	Module-stop state can be set to reduce power consumption.
TrustZone Filter	Security attribution is always non-secure

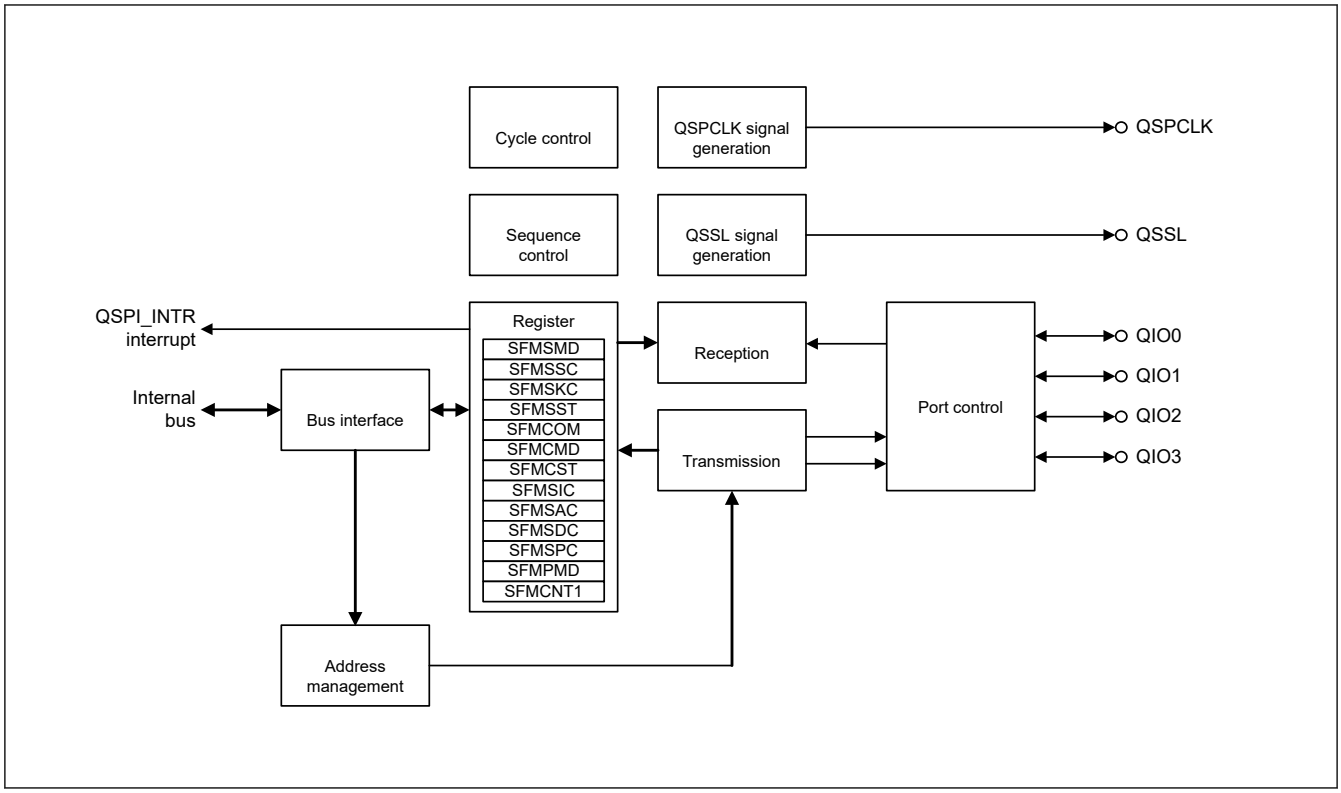

Figure 32.1 QSPI block diagram

Table 32.2 QSPI I/O pins

Function	Pin name	I/O	Description
QSPI	QSPCLK	Output	QSPI clock output pin.
	QSSL	Output	QSPI slave output pin.
	QIO0 to QIO3	I/O	Data0 to Data3

32.2 Register Descriptions

32.2.1 SFMSMD : Transfer Mode Control Register

Base address: QSPI = 0x6400_0000

Offset address: 0x000

Bit position:	31	30	29	28	27	26	25	24	23	22	21	20	19	18	17	16
Bit field:	—	—	—	—	—	—	—	—	—	—	—	—	—	—	—	—
Value after reset:	0	0	0	0	0	0	0	0	0	0	0	0	0	0	0	0

Bit position:	15	14	13	12	11	10	9	8	7	6	5	4	3	2	1	0
Bit field:	SFMCCE	—	—	—	SFMOSW	SFMOHW	SFMOEX	SFMMD3	SFMPAE	SFMPFE	SFMSE[1:0]		—	SFMRM[2:0]		
Value after reset:	0	0	0	0	0	0	0	0	0	0	0	0	0	0	0	0

Bit	Symbol	Function	R/W
2:0	SFMRM[2:0]	Serial interface read mode select 0 0 0: Standard Read 0 0 1: Fast Read 0 1 0: Fast Read Dual Output 0 1 1: Fast Read Dual I/O 1 0 0: Fast Read Quad Output 1 0 1: Fast Read Quad I/O Others: Setting prohibited	R/W
3	—	This bit is read as 0. The write value should be 0.	R/W
5:4	SFMSE[1:0]	QSSL extension function select after SPI bus access 0 0: Do not extend QSSL 0 1: Extend QSSL by 33 QSPCLK 1 0: Extend QSSL by 129 QSPCLK 1 1: Extend QSSL infinitely	R/W
6	SFMPFE	Prefetch function select 0: Disable function 1: Enable function	R/W
7	SFMPAE	Function select for stopping prefetch at locations other than on byte boundaries*1 0: Disable function 1: Enable function	R/W
8	SFMMD3	SPI mode select. 0: SPI mode 0 1: SPI mode 3	R/W
9	SFMOEX	Extension select for the I/O buffer output enable signal for the serial interface 0: Do not extend 1: Extend by 1 QSPCLK	R/W
10	SFMOHW	Hold time adjustment for serial transmission 0: Do not extend high-level width of QSPCLK during transmission 1: Extend high-level width of QSPCLK by 1 PCLKA during transmission	R/W
11	SFMOSW	Setup time adjustment for serial transmission 0: Do not extend low-level width of QSPCLK during transmission 1: Extend low-level width of QSPCLK by 1 PCLKA during transmission	R/W
14:12	—	These bits are read as 0. The write value should be 0.	R/W
15	SFMCCE	Read instruction code select 0: Uses automatically generated SPI instruction code*2 1: Use instruction code in the SFMSIC register	R/W
31:16	—	These bits are read as 0. The write value should be 0.	R/W

Note 1. The QSPI outputs additional one clock without accompanying data reception. For details, see section 32.5.9. Serial Data Receiving Latency.

Note 2. When QSPI accesses serial flash memory, the instruction code is based on the SFMSAC register and SFMSMD register settings. See section 32.6.1. SPI Instructions That Are Automatically Generated.

32.2.2 SFMSSC : Chip Selection Control Register

Base address: QSPI = 0x6400_0000

Offset address: 0x004

Bit position:	31	30	29	28	27	26	25	24	23	22	21	20	19	18	17	16
Bit field:	—	—	—	—	—	—	—	—	—	—	—	—	—	—	—	—
Value after reset:	0	0	0	0	0	0	0	0	0	0	0	0	0	0	0	0

Bit position:	15	14	13	12	11	10	9	8	7	6	5	4	3	2	1	0
Bit field:	—	—	—	—	—	—	—	—	—	—	SFMSLD	SFMSHD	SFMSW[3:0]			
Value after reset:	0	0	0	0	0	0	0	0	0	0	1	1	0	1	1	1

Bit	Symbol	Function	R/W
3:0	SFMSW[3:0]	Minimum High-level Width Select for QSSL Signal 0x0: 1 QSPCLK 0x1: 2 QSPCLK 0x2: 3 QSPCLK 0x3: 4 QSPCLK 0x4: 5 QSPCLK 0x5: 6 QSPCLK 0x6: 7 QSPCLK 0x7: 8 QSPCLK 0x8: 9 QSPCLK 0x9: 10 QSPCLK 0xA: 11 QSPCLK 0xB: 12 QSPCLK 0xC: 13 QSPCLK 0xD: 14 QSPCLK 0xE: 15 QSPCLK 0xF: 16 QSPCLK	R/W
4	SFMSHD	QSSL Signal Hold Time 0: QSSL outputs high after 0.5 QSPCLK cycles from the last rising edge of QSPCLK. 1: QSSL outputs high after 1.5 QSPCLK cycles from the last rising edge of QSPCLK.	R/W
5	SFMSLD	QSSL Signal Setup Time 0: QSSL outputs low before 0.5 QSPCLK cycles from the first rising edge of QSPCLK. 1: QSSL outputs low before 1.5 QSPCLK cycles from the first rising edge of QSPCLK.	R/W
31:6	—	These bits are read as 0. The write value should be 0.	R/W

32.2.3 SFMSKC : Clock Control Register

Base address: QSPI = 0x6400_0000

Offset address: 0x008

Bit position:	31	30	29	28	27	26	25	24	23	22	21	20	19	18	17	16
Bit field:	—	—	—	—	—	—	—	—	—	—	—	—	—	—	—	—
Value after reset:	0	0	0	0	0	0	0	0	0	0	0	0	0	0	0	0

Bit position:	15	14	13	12	11	10	9	8	7	6	5	4	3	2	1	0
Bit field:	—	—	—	—	—	—	—	—	—	—	SFMDTY	SFMDV[4:0]				
Value after reset:	0	0	0	0	0	0	0	0	0	0	0	0	1	0	0	0

Bit	Symbol	Function	R/W
4:0	SFMDV[4:0]	Serial interface reference (QSPCLK) cycle select. (Pay attention to irregularities.) 0x02: 4 PCLKA 0x03: 5 PCLKA (divided by an odd number)*1 0x04: 6 PCLKA 0x05: 7 PCLKA (divided by an odd number)*1 0x06: 8 PCLKA 0x07: 9 PCLKA (divided by an odd number)*1 0x08: 10 PCLKA 0x09: 11 PCLKA (divided by an odd number)*1 0x0A: 12 PCLKA 0x0B: 13 PCLKA (divided by an odd number)*1 0x0C: 14 PCLKA 0x0D: 15 PCLKA (divided by an odd number)*1 0x0E: 16 PCLKA 0x0F: 17 PCLKA (divided by an odd number)*1 0x10: 18 PCLKA 0x11: 20 PCLKA 0x12: 22 PCLKA 0x13: 24 PCLKA 0x14: 26 PCLKA 0x15: 28 PCLKA 0x16: 30 PCLKA 0x17: 32 PCLKA 0x18: 34 PCLKA 0x19: 36 PCLKA 0x1A: 38 PCLKA 0x1B: 40 PCLKA 0x1C: 42 PCLKA 0x1D: 44 PCLKA 0x1E: 46 PCLKA 0x1F: 48 PCLKA Others: Setting prohibited	R/W
5	SFMDTY	Duty ratio correction function select for the QSPCLK signal when devided by an odd number 0: Make no correction 1: Make correction	R/W
31:6	—	These bits are read as 0. The write value should be 0.	R/W

Note 1. Set the SFMDTY bit to 1 when PCLKA is to be divided by an odd number.

32.2.4 SFMSST : Status Register

Base address: QSPI = 0x6400_0000

Offset address: 0x00C

Bit position:	31	30	29	28	27	26	25	24	23	22	21	20	19	18	17	16
Bit field:	—	—	—	—	—	—	—	—	—	—	—	—	—	—	—	—
Value after reset:	0	0	0	0	0	0	0	0	0	0	0	0	0	0	0	0

Bit position:	15	14	13	12	11	10	9	8	7	6	5	4	3	2	1	0
Bit field:	—	—	—	—	—	—	—	—	PFOFF	PFFUL	—	PFCNT[4:0]				
Value after reset:	0	0	0	0	0	0	0	0	1	0	0	0	0	0	0	0

Bit	Symbol	Function	R/W
4:0	PFCNT[4:0]	Number of bytes of prefetched data 0x00: 0 byte 0x01: 1 byte 0x02: 2 bytes 0x03: 3 bytes 0x04: 4 bytes 0x05: 5 bytes 0x06: 6 bytes 0x07: 7 bytes 0x08: 8 bytes 0x09: 9 bytes 0x0A: 10 bytes 0x0B: 11 bytes 0x0C: 12 bytes 0x0D: 13 bytes 0x0E: 14 bytes 0x0F: 15 bytes 0x10: 16 bytes 0x11: 17 bytes 0x12: 18 bytes Others: Reserved	R
5	—	This bit is read as 0.	R
6	PFFUL	Prefetch buffer state 0: Prefetch buffer has free space 1: Prefetch buffer is full	R
7	PFOFF	Prefetch function operating state 0: Prefetch function operating 1: Prefetch function not enabled or not operating	R
31:8	—	These bits are read as 0.	R

32.2.5 SFMCOM : Communication Port Register

Base address: QSPI = 0x6400_0000

Offset address: 0x010

Bit position:	31	30	29	28	27	26	25	24	23	22	21	20	19	18	17	16
Bit field:	—	—	—	—	—	—	—	—	—	—	—	—	—	—	—	—
Value after reset:	0	0	0	0	0	0	0	0	0	0	0	0	0	0	0	0

Bit position:	15	14	13	12	11	10	9	8	7	6	5	4	3	2	1	0
Bit field:	—	—	—	—	—	—	—	—	SFMD[7:0]							
Value after reset:	0	0	0	0	0	0	0	0	x	x	x	x	x	x	x	x

Bit	Symbol	Function	R/W
7:0	SFMD[7:0]	Port for direct communication with the SPI bus Input and output from this port are converted to an SPI bus cycle in direct communications mode (DCOM = 1). Access to this port is ignored in ROM access mode.	R/W
31:8	—	These bits are read as 0. The write value should be 0.	R/W

32.2.6 SFMCMD : Communication Mode Control Register

Base address: QSPI = 0x6400_0000

Offset address: 0x014

Bit position:	31	30	29	28	27	26	25	24	23	22	21	20	19	18	17	16
Bit field:	—	—	—	—	—	—	—	—	—	—	—	—	—	—	—	—
Value after reset:	0	0	0	0	0	0	0	0	0	0	0	0	0	0	0	0

Bit position:	15	14	13	12	11	10	9	8	7	6	5	4	3	2	1	0
Bit field:	—	—	—	—	—	—	—	—	—	—	—	—	—	—	—	DCOM
Value after reset:	0	0	0	0	0	0	0	0	0	0	0	0	0	0	0	0

Bit	Symbol	Function	R/W
0	DCOM	Mode select for communication with the SPI bus 0: ROM access mode 1: Direct communication mode*1	R/W
31:1	—	These bits are read as 0. The write value should be 0.	R/W

Note 1. SFMCMD.DCOM = 1 must be written when the transaction ends. For details, see section 32.10. Direct Communication Mode.

32.2.7 SFMCST : Communication Status Register

Base address: QSPI = 0x6400_0000

Offset address: 0x018

Bit position:	31	30	29	28	27	26	25	24	23	22	21	20	19	18	17	16
Bit field:	—	—	—	—	—	—	—	—	—	—	—	—	—	—	—	—
Value after reset:	0	0	0	0	0	0	0	0	0	0	0	0	0	0	0	0

Bit position:	15	14	13	12	11	10	9	8	7	6	5	4	3	2	1	0
Bit field:	—	—	—	—	—	—	—	—	EROMR	—	—	—	—	—	—	COMBSY
Value after reset:	0	0	0	0	0	0	0	0	0	0	0	0	0	0	0	0

Bit	Symbol	Function	R/W
0	COMBSY	SPI bus cycle completion state in direct communication 0: No serial transfer being processed 1: Serial transfer being processed	R
6:1	—	These bits are read as 0. The write value should be 0.	R/W
7	EROMR	ROM access detection status in direct communication mode 0: ROM access not detected 1: ROM access detected	R/(W)*1
31:8	—	These bits are read as 0. The write value should be 0.	R/W

Note 1. Only 0 can be written to this bit.

32.2.8 SFMSIC : Instruction Code Register

Base address: QSPI = 0x6400_0000

Offset address: 0x020

Bit position:	31	30	29	28	27	26	25	24	23	22	21	20	19	18	17	16
Bit field:	—	—	—	—	—	—	—	—	—	—	—	—	—	—	—	—
Value after reset:	0	0	0	0	0	0	0	0	0	0	0	0	0	0	0	0

Bit position:	15	14	13	12	11	10	9	8	7	6	5	4	3	2	1	0
Bit field:	—	—	—	—	—	—	—	—	SFMCIC[7:0]							
Value after reset:	0	0	0	0	0	0	0	0	0	0	0	0	0	0	0	0

Bit	Symbol	Function	R/W
7:0	SFMCIC[7:0]	Serial flash instruction code to substitute	R/W
31:8	—	These bits are read as 0. The write value should be 0.	R/W

32.2.9 SFMSAC : Address Mode Control Register

Base address: QSPI = 0x6400_0000

Offset address: 0x024

Bit position:	31	30	29	28	27	26	25	24	23	22	21	20	19	18	17	16
Bit field:	—	—	—	—	—	—	—	—	—	—	—	—	—	—	—	—
Value after reset:	0	0	0	0	0	0	0	0	0	0	0	0	0	0	0	0

Bit position:	15	14	13	12	11	10	9	8	7	6	5	4	3	2	1	0
Bit field:	—	—	—	—	—	—	—	—	—	—	—	SFM4BC	—	—	SFMAS[1:0]	
Value after reset:	0	0	0	0	0	0	0	0	0	0	0	0	0	0	1	0

Bit	Symbol	Function	R/W
1:0	SFMAS[1:0]	Number of address bytes select for the serial interface 0 0: 1 byte 0 1: 2 bytes 1 0: 3 bytes 1 1: 4 bytes	R/W
3:2	—	These bits are read as 0. The write value should be 0.	R/W
4	SFM4BC	Selection of instruction code automatically generated when the serial interface address width is 4 bytes 0: Do not use 4-byte address read instruction code 1: Use 4-byte address read instruction code	R/W
31:5	—	These bits are read as 0. The write value should be 0.	R/W

32.2.10 SFMSDC : Dummy Cycle Control Register

Base address: QSPI = 0x6400_0000

Offset address: 0x028

Bit position:	31	30	29	28	27	26	25	24	23	22	21	20	19	18	17	16
Bit field:	—	—	—	—	—	—	—	—	—	—	—	—	—	—	—	—
Value after reset:	0	0	0	0	0	0	0	0	0	0	0	0	0	0	0	0

Bit position:	15	14	13	12	11	10	9	8	7	6	5	4	3	2	1	0
Bit field:	SFMXD[7:0]								SFMX EN	SFMX ST	—	—	SFMDN[3:0]			
Value after reset:	1	1	1	1	1	1	1	1	0	0	0	0	0	0	0	0

Bit	Symbol	Function	R/W
3:0	SFMDN[3:0]	Number of dummy cycles select for Fast Read instructions 0x0: Default dummy cycles for each instruction: - Fast Read Quad I/O: 6 QSPCLK - Fast Read Quad Output: 8 QSPCLK - Fast Read Dual I/O: 4 QSPCLK - Fast Read Dual Output: 8 QSPCLK - Fast Read: 8 QSPCLK 0x1: 3 QSPCLK*1 0x2: 4 QSPCLK 0x3: 5 QSPCLK 0x4: 6 QSPCLK 0x5: 7 QSPCLK 0x6: 8 QSPCLK 0x7: 9 QSPCLK 0x8: 10 QSPCLK 0x9: 11 QSPCLK 0xA: 12 QSPCLK 0xB: 13 QSPCLK 0xC: 14 QSPCLK 0xD: 15 QSPCLK 0xE: 16 QSPCLK 0xF: 17 QSPCLK	R/W
5:4	—	These bits are read as 0. The write value should be 0.	R/W
6	SFMXST	XIP mode status 0: Normal (non-XIP) mode 1: XIP mode	R
7	SFMXEN	XIP mode permission 0: Prohibit XIP mode 1: Permit XIP mode	R/W
15:8	SFMXD[7:0]	Mode data for serial flash (Controls XIP mode.)*2	R/W
31:16	—	These bits are read as 0. The write value should be 0.	R/W

Note 1. To avoid a conflict with the input/output switch of the serial flash memory pin connected to QIO0 pin, select more than four cycles of QSPCLK as the number of dummy cycles for the fast read instruction when the output enable signal is extended by setting the SFMOEX bit in the SFMSMD register to 1.

Note 2. As the mode data for serial flash memory, specify the XIP mode setting data set in actual serial flash memory.

32.2.11 SFMSPC : SPI Protocol Control Register

Base address: QSPI = 0x6400_0000

Offset address: 0x030

Bit position:	31	30	29	28	27	26	25	24	23	22	21	20	19	18	17	16
Bit field:	—	—	—	—	—	—	—	—	—	—	—	—	—	—	—	—
Value after reset:	0	0	0	0	0	0	0	0	0	0	0	0	0	0	0	0

Bit position:	15	14	13	12	11	10	9	8	7	6	5	4	3	2	1	0
Bit field:	—	—	—	—	—	—	—	—	—	—	—	SFMSDE	—	—	SFMSPI[1:0]	
Value after reset:	0	0	0	0	0	0	0	0	0	0	0	1	0	0	0	0

Bit	Symbol	Function	R/W
1:0	SFMSPI[1:0]	SPI protocol select*1 0 0: Single SPI Protocol, Extended SPI protocol 0 1: Dual SPI protocol 1 0: Quad SPI protocol 1 1: Setting prohibited	R/W
3:2	—	These bits are read as 0. The write value should be 0.	R/W
4	SFMSDE	QSPCLK extended selection bit when switching I/O of QIOn pin 0: No QSPCLK extension 1: QSPCLK expansion when switching I/O direction of QIOn pin	R/W
31:5	—	These bits are read as 0. The write value should be 0.	R/W

Note 1. The states of the QIO2 and QIO3 pins change depending on the settings of the SFMSMD.SFMRM[2:0] and SFMSPI[1:0] bits. For details, see section 32.9. QIO2 and QIO3 Pin States.

32.2.12 SFMPMD : Port Control Register

Base address: QSPI = 0x6400_0000

Offset address: 0x034

Bit position:	31	30	29	28	27	26	25	24	23	22	21	20	19	18	17	16
Bit field:	—	—	—	—	—	—	—	—	—	—	—	—	—	—	—	—
Value after reset:	0	0	0	0	0	0	0	0	0	0	0	0	0	0	0	0

Bit position:	15	14	13	12	11	10	9	8	7	6	5	4	3	2	1	0
Bit field:	—	—	—	—	—	—	—	—	—	—	—	—	—	SFMWPL	—	—
Value after reset:	0	0	0	0	0	0	0	0	0	0	0	0	0	0	0	0

Bit	Symbol	Function	R/W
1:0	—	These bits are read as 0. The write value should be 0.	R/W
2	SFMWPL	WP pin level specification 0: Low level 1: High level	R/W
31:3	—	These bits are read as 0. The write value should be 0.	R/W

32.2.13 SFMCNT1 : External QSPI Address Register

Base address: QSPI = 0x6400_0000

Offset address: 0x804

Bit position:	31	30	29	28	27	26	25	24	23	22	21	20	19	18	17	16
Bit field:	QSPI_EXT[5:0]						—	—	—	—	—	—	—	—	—	—
Value after reset:	0	0	0	0	0	0	0	0	0	0	0	0	0	0	0	0

Bit position:	15	14	13	12	11	10	9	8	7	6	5	4	3	2	1	0
Bit field:	—	—	—	—	—	—	—	—	—	—	—	—	—	—	—	—
Value after reset:	0	0	0	0	0	0	0	0	0	0	0	0	0	0	0	0

Bit	Symbol	Function	R/W
25:0	—	These bits are read as 0. The write value should be 0.	R/W
31:26	QSPI_EXT[5:0]	Bank switching address When accessing from 0x60000000 to 0x63FFFFFF, the address bus is set from QSPI_EXT[5:0] to the upper 6 bits of the internal bus address for the address bus. 0x00: QSPI bank 00 0x01: QSPI bank 01 0x02: QSPI bank 02 ⋮ ⋮ 0x3C: QSPI bank 60 0x3D: QSPI bank 61 0x3E: QSPI bank 62 0x3F: Setting prohibited	R/W

32.3 Memory Map

32.3.1 External Bus Space

The locations of a serial flash memory and control register on the address space are determined by the address range of the area set in the configuration.

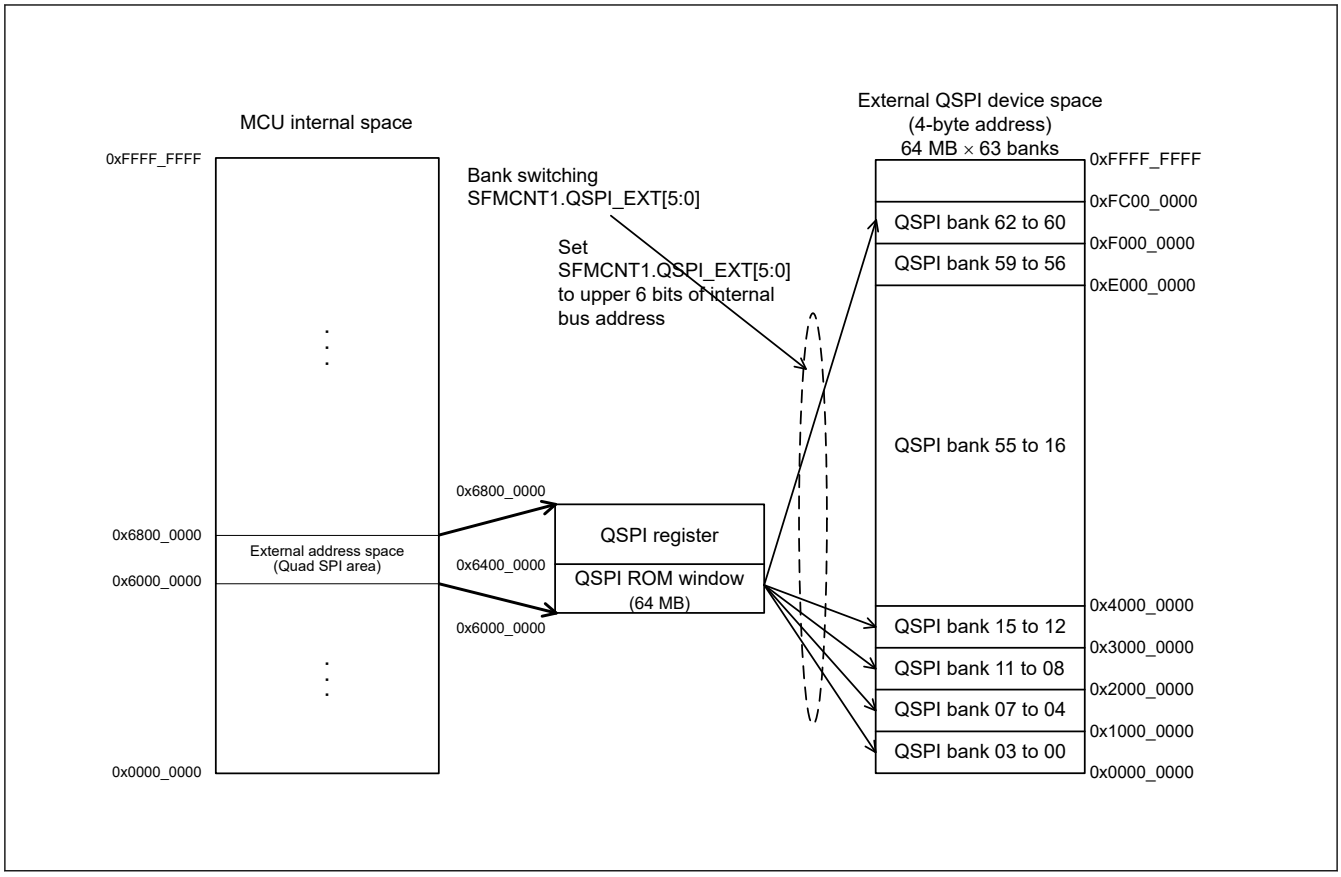

Figure 32.2 Default area setting and memory map

32.3.2 Address Width of the SPI Space and SPI Bus

The SPI space has a 32-bit address width for referencing the serial flash memory. When the SPI space is accessed for a read, an SPI bus cycle starts automatically, and data read from the serial flash is returned.

The address width of the SPI space is fixed at 32 bits. However, the address width of the SPI bus is selectable to 8, 16, 24, or 32 bits in the SFMAS[1:0] bits in the Address Mode Control Register (SFMSAC) register. If 8, 16, or 24 bits is selected as the address width of the SPI bus, only the lower part of the address used to access the SPI space is posted to the serial flash memory through the SPI bus. As a result, the mirror image of the serial flash corresponding to the address width of the SPI bus repeatedly appears in the SPI space.

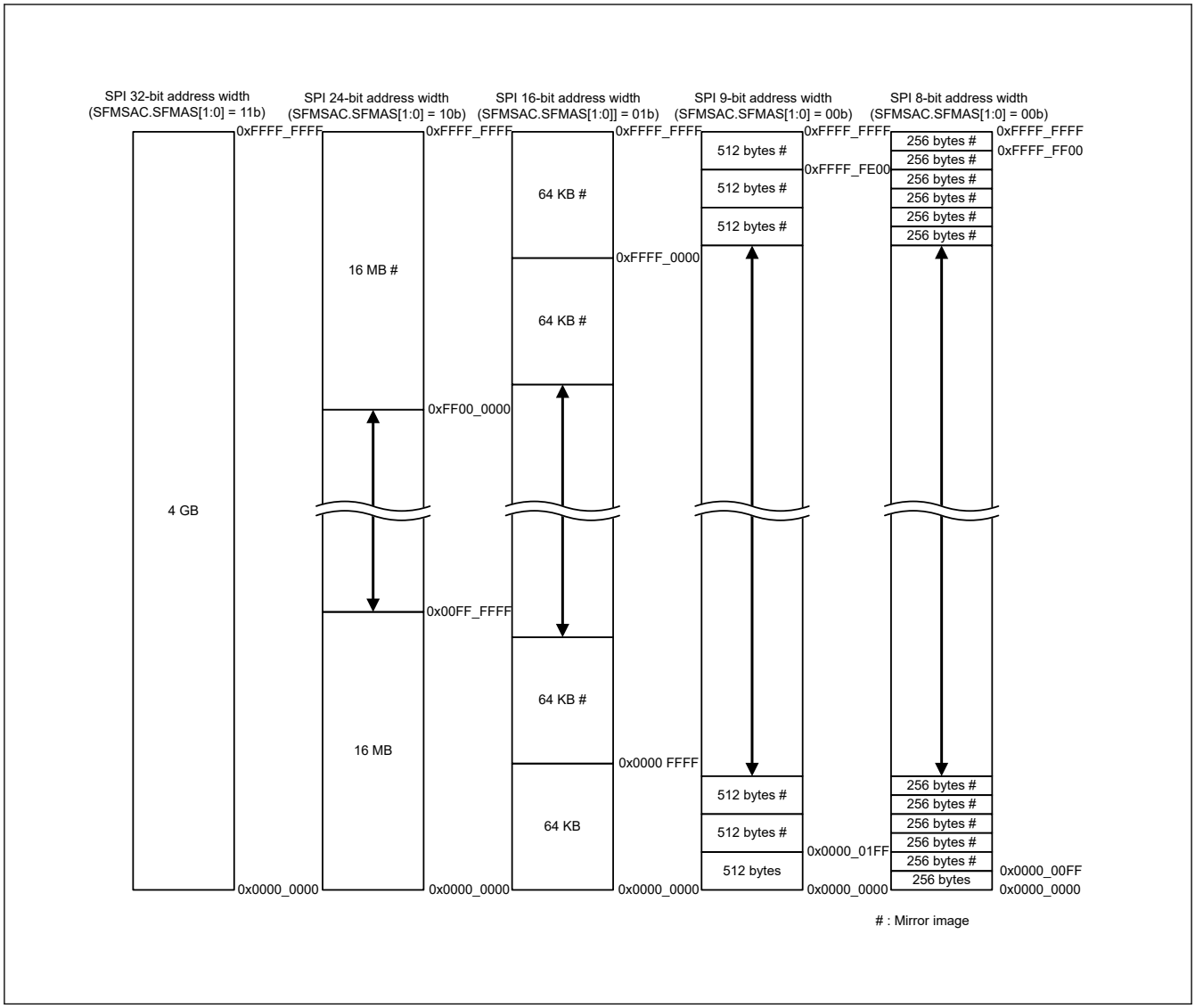

Figure 32.3 Memory map of SPI space

Note: The SPI bus address width is selectable to 8, 16, 24, or 32 bits in the SFMAS[1:0] bits in the SFMSAC register (cases 1 to 3 and 5 in the figure correspond to the respective address widths). When an 8-bit address width is selected, the address information of the ninth bit can be embedded in the Read instruction code. The memory map in case 4 in the figure is for the 9-bit address width. For details on the Read instruction, see section 32.6.2. Standard Read Instruction.

32.4 SPI Bus

32.4.1 SPI Protocol

Single SPI, extended SPI, dual SPI, and quad SPI are supported in addition to the SPI protocol used for serial flash memory connection.

The initial state of the SPI protocol is Single SPI, extended SPI and can be changed with the SFMSPI[1:0] bits in the SPI Protocol Control Register (SFMSPC) register.

The address and data pins used in the Single SPI, extended SPI protocol change depending on the setting of the serial interface read mode select bits SFMRM[2:0] in Transfer Mode Control Register (SFMSMD). Table 32.3 and Table 32.4 list the pins used for instruction code, addresses, and data in each of the SPI protocols.

Note: In read operation, the QSPI outputs additional one clock without accompanying data reception per one SPI bus cycle. For details, see section 32.5.9. Serial Data Receiving Latency.

Table 32.3 List of SPI Protocols (1)

SPI Protocol (SFMSPC.SFMSPI[1:0])	Single SPI Protocol, Extended SPI Protocol					
Serial interface read mode select (SFMSMD.SFMRM[2:0])	Standard read	Fast read	Fast read dual output	Fast read dual I/O	Fast read quad output	Fast read quad I/O
All pins used	QSPCLK, QSSL, QIO0, QIO1	QSPCLK, QSSL, QIO0, QIO1	QSPCLK, QSSL, QIO0, QIO1	QSPCLK, QSSL, QIO0, QIO1	QSPCLK, QSSL, QIO0, QIO1, QIO2, QIO3	QSPCLK, QSSL, QIO0, QIO1, QIO2, QIO3
Pins used for instruction code	QIO0	QIO0	QIO0	QIO0	QIO0	QIO0
Pins used for addresses	QIO0	QIO0	QIO0	QIO0, QIO1	QIO0	QIO0, QIO1, QIO2, QIO3
Pins used for data	QIO0/QIO1	QIO0/QIO1	QIO0, QIO1	QIO0, QIO1	QIO0, QIO1, QIO2, QIO3	QIO0, QIO1, QIO2, QIO3

Note: Single SPI protocol operation is for standard read and fast read. Extended SPI protocol operation is fast read dual output, fast read dual I/O, fast read quad output, and fast read quad I/O.

Table 32.4 List of SPI Protocols (2)

SPI Protocol (SFMSPC.SFMSPI[1:0])	Dual-SPI Protocol		Quad-SPI Protocol	
Serial interface read mode select (SFMSMD.SFMRM[2:0])	Fast read dual output	Fast read dual I/O	Fast read quad output	Fast read quad I/O
All pins used	QSPCLK, QSSL, QIO0, QIO1	QSPCLK, QSSL, QIO0, QIO1	QSPCLK, QSSL, QIO0, QIO1, QIO2, QIO3	QSPCLK, QSSL, QIO0, QIO1, QIO2, QIO3
Pins used for instruction code	QIO0, QIO1	QIO0, QIO1	QIO0, QIO1, QIO2, QIO3	QIO0, QIO1, QIO2, QIO3
Pins used for addresses	QIO0, QIO1	QIO0, QIO1	QIO0, QIO1, QIO2, QIO3	QIO0, QIO1, QIO2, QIO3
Pins used for data	QIO0, QIO1	QIO0, QIO1	QIO0, QIO1, QIO2, QIO3	QIO0, QIO1, QIO2, QIO3

In single SPI protocol and extended SPI protocol, the instruction code is always output from the QIO0 pin. Address and data input/output operations are performed according to the settings in SFMSMD.SFMRM[2:0].

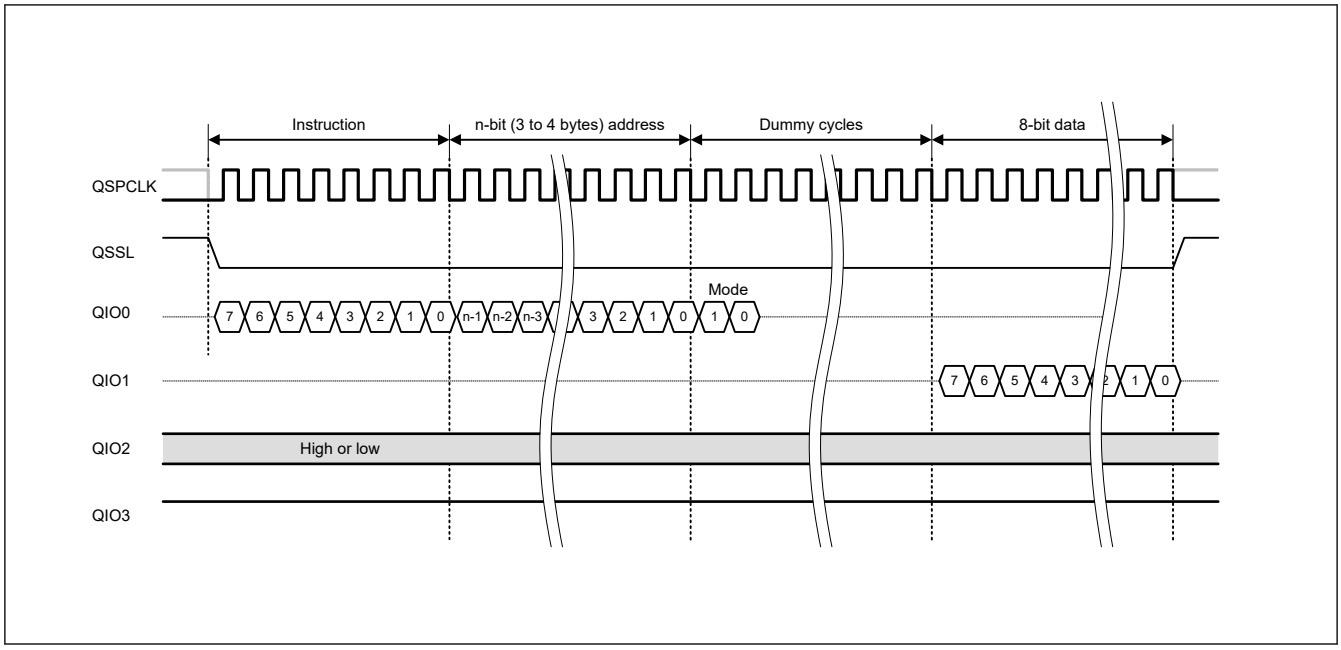

Figure 32.4 Single SPI Protocol example for Fast Read

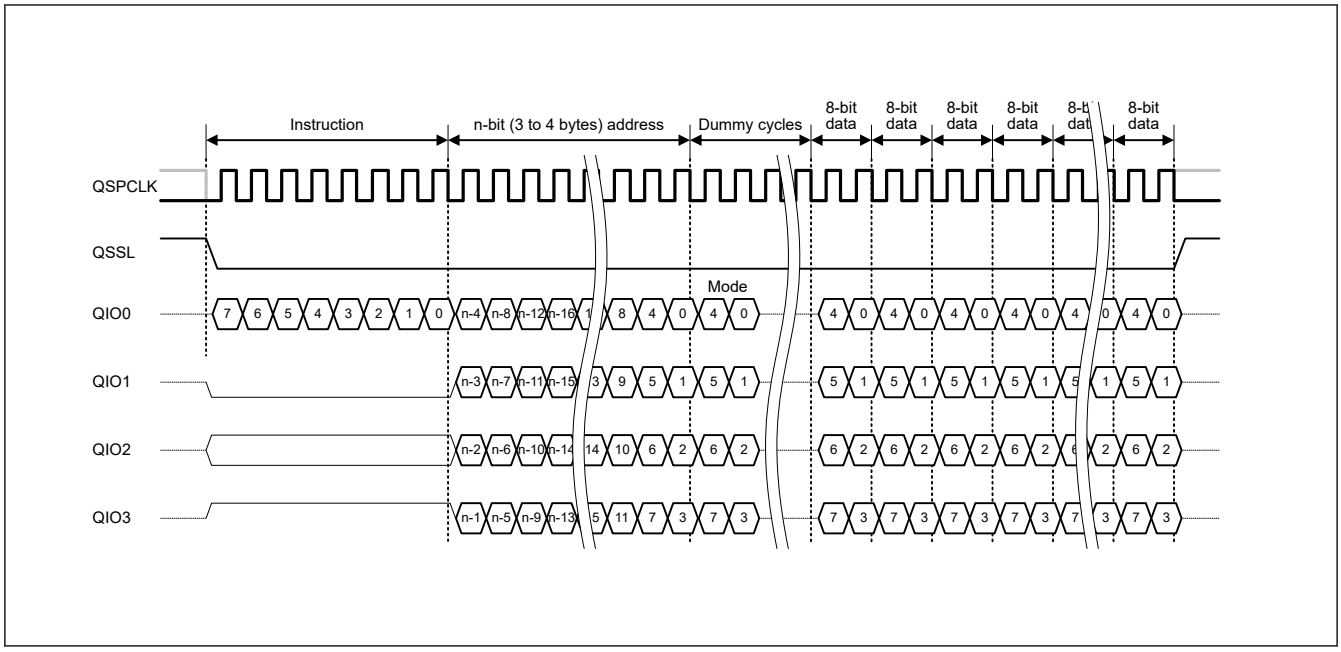

Figure 32.5 Extended SPI Protocol example for Fast Read Quad I/O

The Dual SPI protocol performs I/O operation of all signals such as instruction codes, addresses, and data using two pins, QIO0 and QIO1.

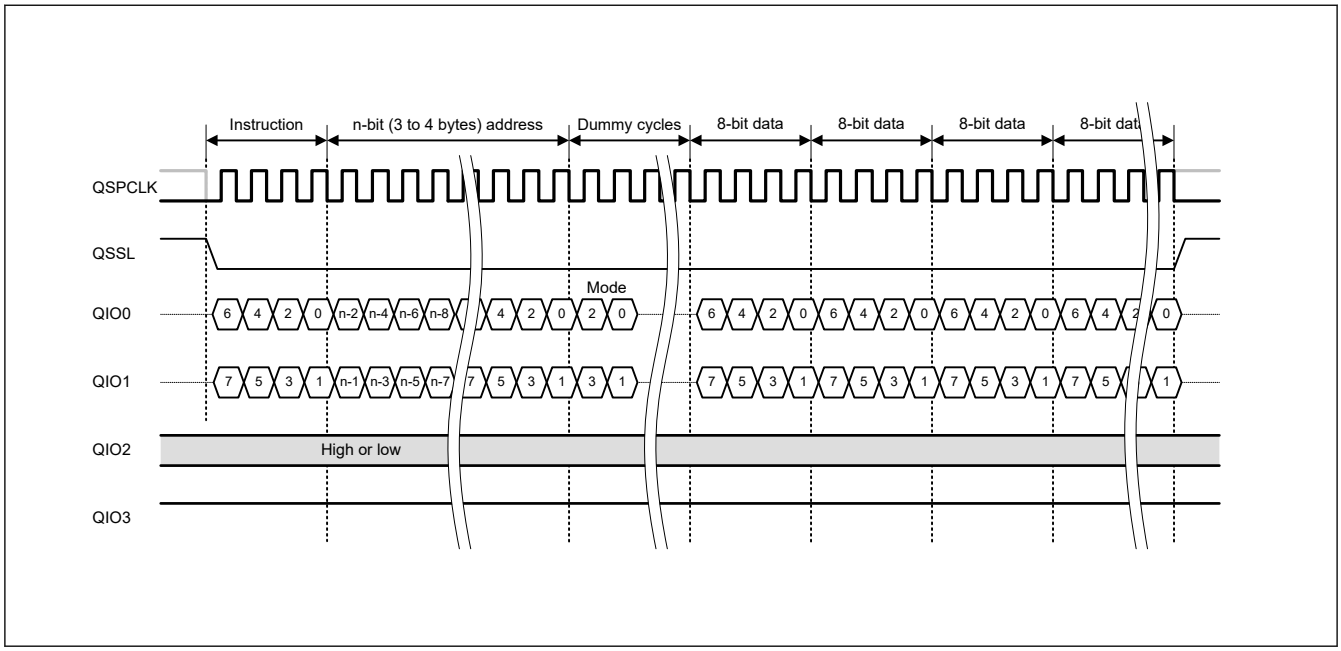

Figure 32.6 Dual SPI protocol example for Fast Read Dual I/O

The Quad SPI protocol performs I/O operation of all signals such as instruction codes, addresses, and data using four pins, QIO0, QIO1, QIO2, and QIO3.

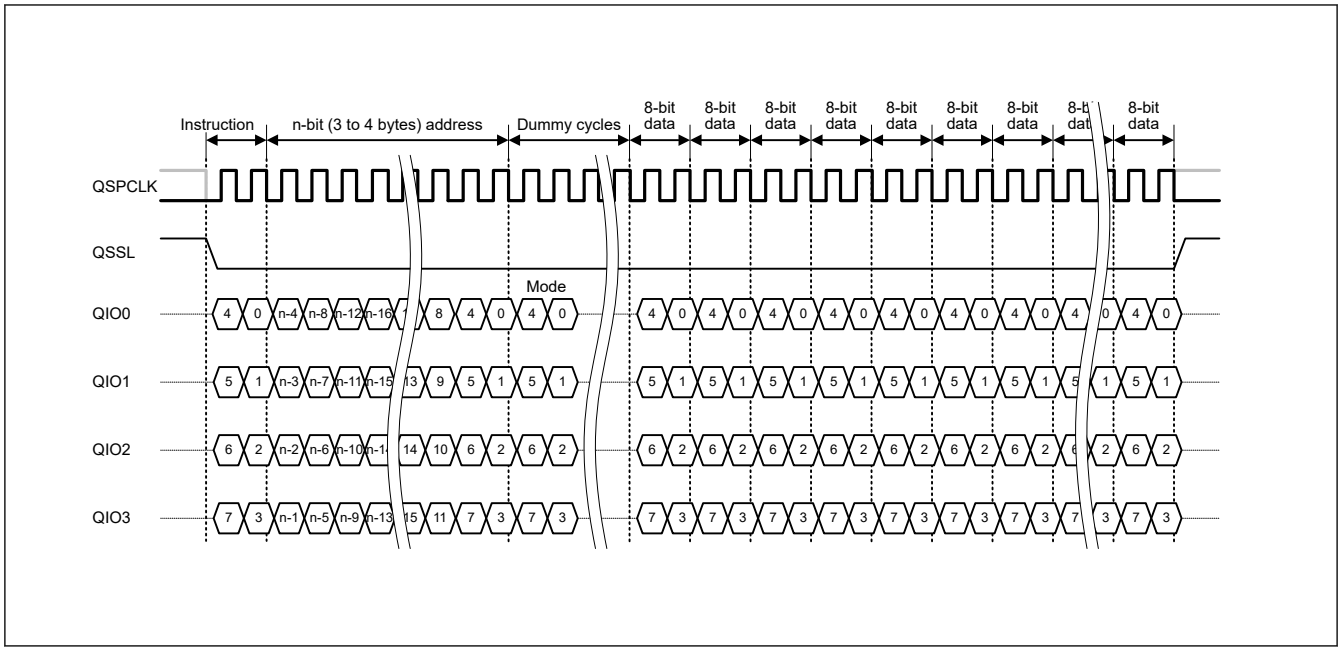

Figure 32.7 Quad SPI protocol example for Fast Read Quad I/O

32.4.2 SPI Mode

Either SPI mode 0 or SPI mode 3 can be selected as the SPI mode by the SFMSMD.SFMMD3 bit. This can be switched by changing the register setting during operation. The difference between SPI modes 0 and 3 is the state of the QSPCLK signal when it is inactive. The standby level of the QSPCLK signal in SPI mode 0 is low, and high in SPI mode 3.

Serial data is output from the QSPI on a falling edge of the serial clock and is read into the serial flash memory on a rising edge of the serial clock. Serial data is output from the serial flash memory on a falling edge of the serial clock and is read into the QSPI on the next falling edge of the serial clock.

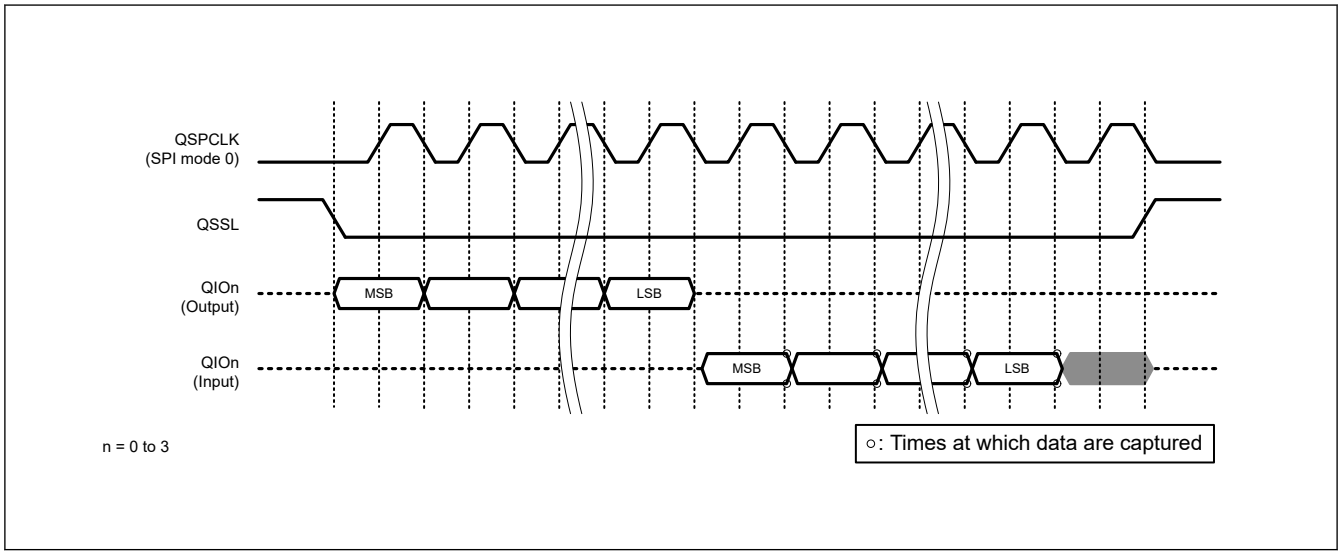

Figure 32.8 Basic serial interface timing (SPI mode 0)

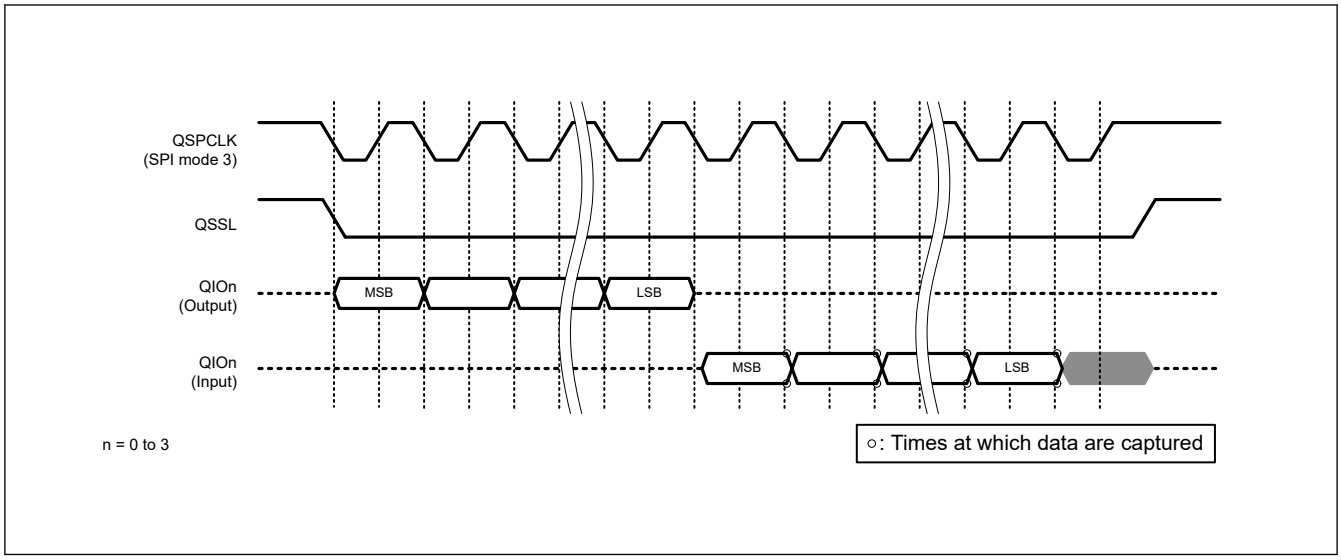

Figure 32.9 Basic serial interface timing (SPI mode 3)

32.5 SPI Bus Timing Adjustment

The timing of the SPI bus signal can be adjusted in the registers. The configured timing is applied to all SPI bus accesses, for both ROM access and direct communication.

32.5.1 SPI Bus Reference Cycles

The SPI bus operates on reference (QSPCLK) cycles obtained by multiplying PCLKA by an integer. The reference cycles are selectable within the range of PCLKA multiplied by 4 to 48 in the SFMDV[4:0] bits in the Clock Control Register (SFMSKC).

Table 32.5 Relationship among SFMDV[4:0] bits, cycle multiplier, and serial clock frequencies (1 of 2)

SFMDV[4:0]	Cycle multiplier	QSPCLK when PCLKA = 80MHz
11111b	48	1.67
11110b	46	1.74
11101b	44	1.82
11100b	42	1.90
11011b	40	2.00
11010b	38	2.11
11001b	36	2.22
11000b	34	2.35
10111b	32	2.50
10110b	30	2.67
10101b	28	2.86
10100b	26	3.08
10011b	24	3.33
10010b	22	3.64
10001b	20	4.00
10000b	18	4.44
01111b	17	4.71
01110b	16	5.00
01101b	15	5.33

Table 32.5 Relationship among SFMDV[4:0] bits, cycle multiplier, and serial clock frequencies (2 of 2)

SFMDV[4:0]	Cycle multiplier	QSPCLK when PCLKA = 80MHz
01100b	14	5.71
01011b	13	6.15
01010b	12	6.67
01001b	11	7.27
01000b	10	8.00
00111b	9	8.89
00110b	8	10.00
00101b	7	11.43
00100b	6	13.33
00011b	5	16.00
00010b	4	20.00
00001b	Setting prohibited	
00000b		

32.5.2 QSPCLK Signal Duty Ratio

When the reference clock is configured as PCLKA divided by an odd number without duty ratio correction, the duty ratio of the QSPCLK signal will not be 50%. When the reference clock is PCLKA divided by an odd number, be sure to enable the duty ratio correction function (SFMSKC.SFMDTY = 1).

When the reference clock is PCLKA divided by an even number, the SFMDTY setting in the SFMSKC register is ignored.

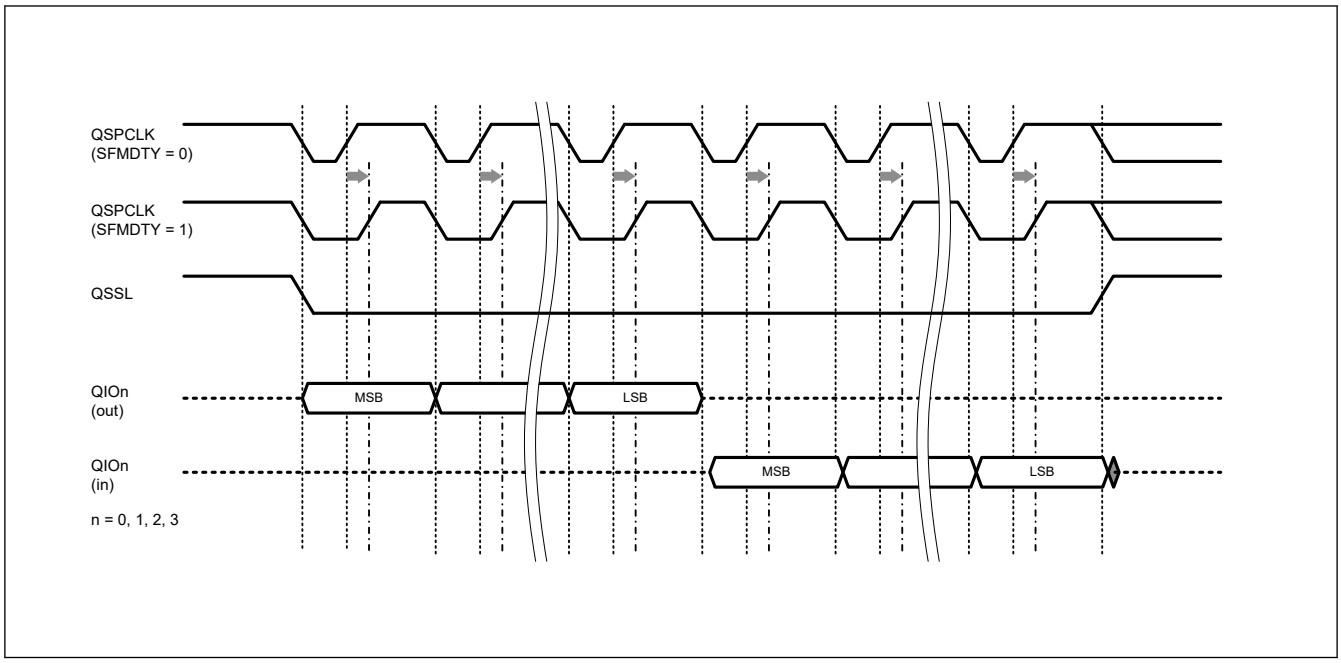

Figure 32.10 Example correction of the QSPCLK signal duty ratio using the SFMDTY bit, when PCLKA is multiplied by 3

32.5.3 Minimum High-Level Width for the QSSL Signal

Between adjacent SPI bus cycles, the QSSL signal must be held high (inactive) for a sufficient time to satisfy the deselect time required by the serial flash memory. The minimum high-level width of the QSSL output signal is selectable as the reference cycle multiplied by an integer from 1 to 16 in the SFMSW[3:0] bits in the Instruction Code Register (SFMSSC) register.

32.5.4 QSSL Signal Setup Time

The QSSL signal setup time that the serial flash memory requires after the QSSL signal is driven active low until the first rising edge of the QSPCLK signal can be configured. The setup time can be selected as 0.5 or 1.5 cycles of QSPCLK in the SFMSLD bit of the SFMSSC register.

Set a value that meets the most constrained timing condition for your application.

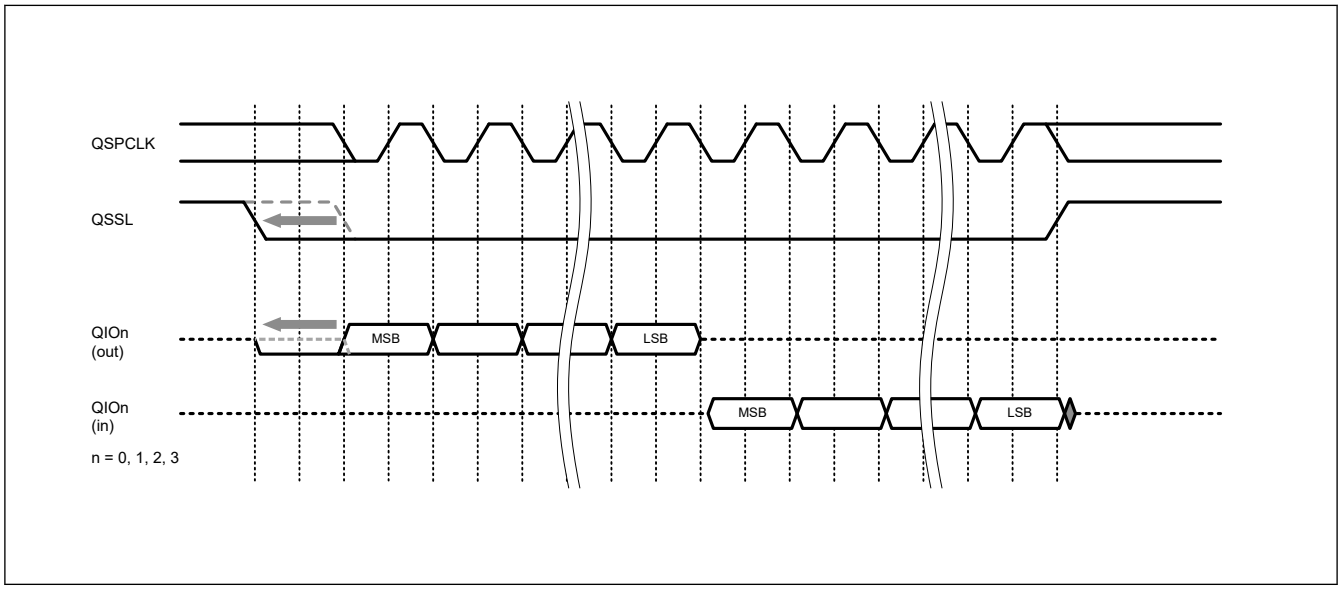

Figure 32.11 Setup time adjustment for the QSSL signal using the SFMSLD bit

32.5.5 QSSL Signal Hold Time

The QSSL signal hold time that the serial flash memory requires until the QSSL signal is driven high after the last rising edge of the QSPCLK signal can be configured. The hold time can be selected as 0.5 or 1.5 cycles of QSPCLK in the SFMSHD bit of the SFMSSC register.

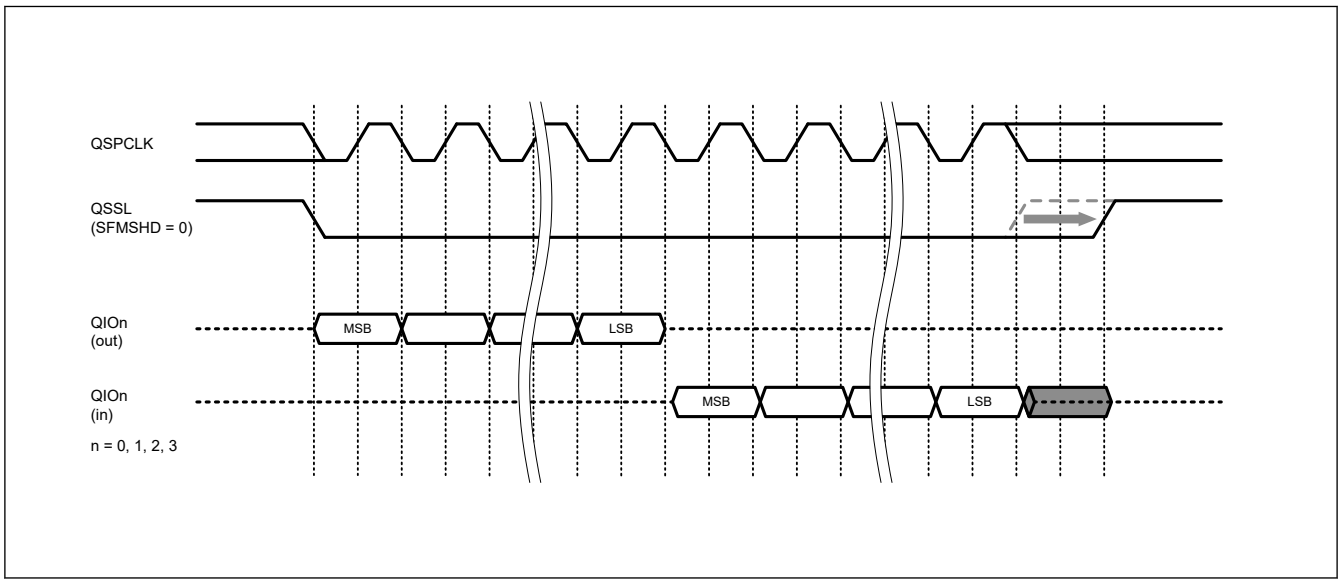

Figure 32.12 Hold time adjustment for the QSSL signal using the SFMSHD bit

32.5.6 Hold Time of the Serial Data Output Enable

The buffer output enable of the QIO0, QIO1, QIO2, or QIO3 pin can be extended by 1 QSPCLK using the SFMOEX bit in the SFMSMD register.

For a standard read instruction, it is extended immediately after an address code. For other read instructions, it is extended after two cycles of mode data (XIP mode control) of the serial flash memory in dummy cycles.

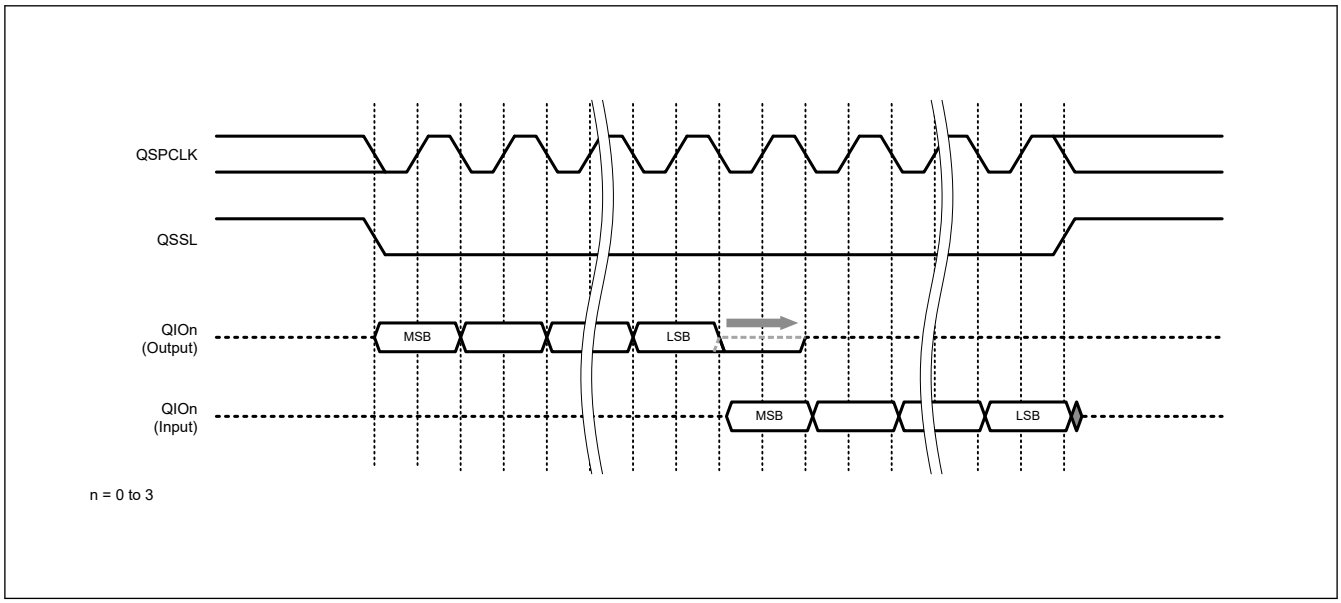

Figure 32.13 Hold time adjustment for output enable using the SFMOEX bit (Standard Read)

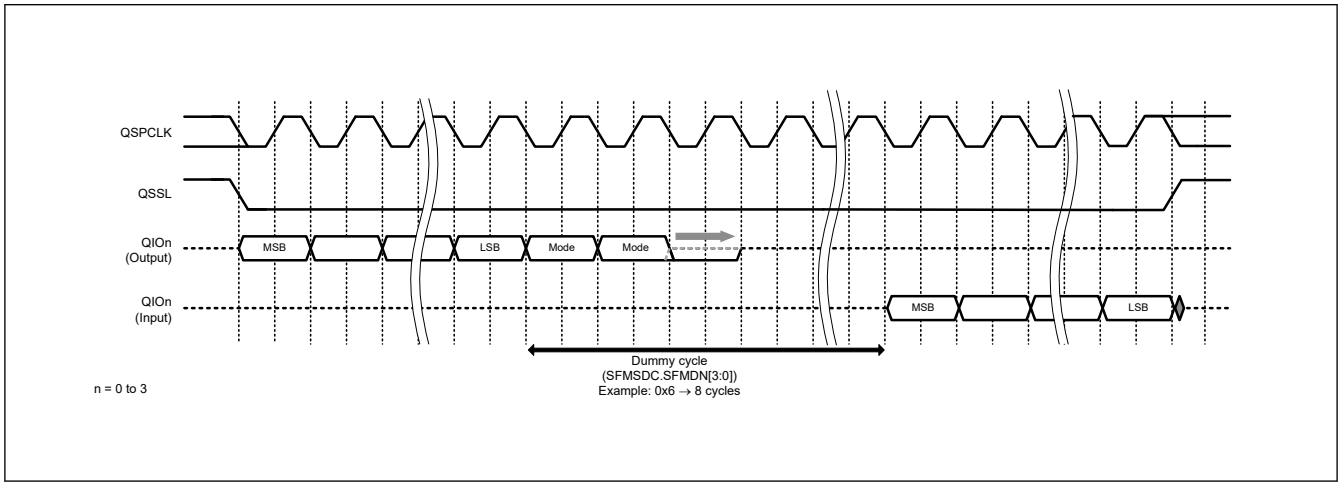

Figure 32.14 Hold Time Adjustment of Output Enabling Using the SFMOEX Bit (Fast Read)

32.5.7 Setup Time for Serial Data Output

When a command or address is transmitted to the serial flash memory, the setup time begins on serial data output and ends when the QSPCLK signal rises. If this setup time is insufficient, it can be extended by 1 PCLKA using the SFMOSW bit in the SFMSMD register. When SFMOSW is 1, the low-level width of QSPCLK during serial data transmission is extended by 1 PCLKA while data is being output from the QSPI. This function has no effect on serial data reception.

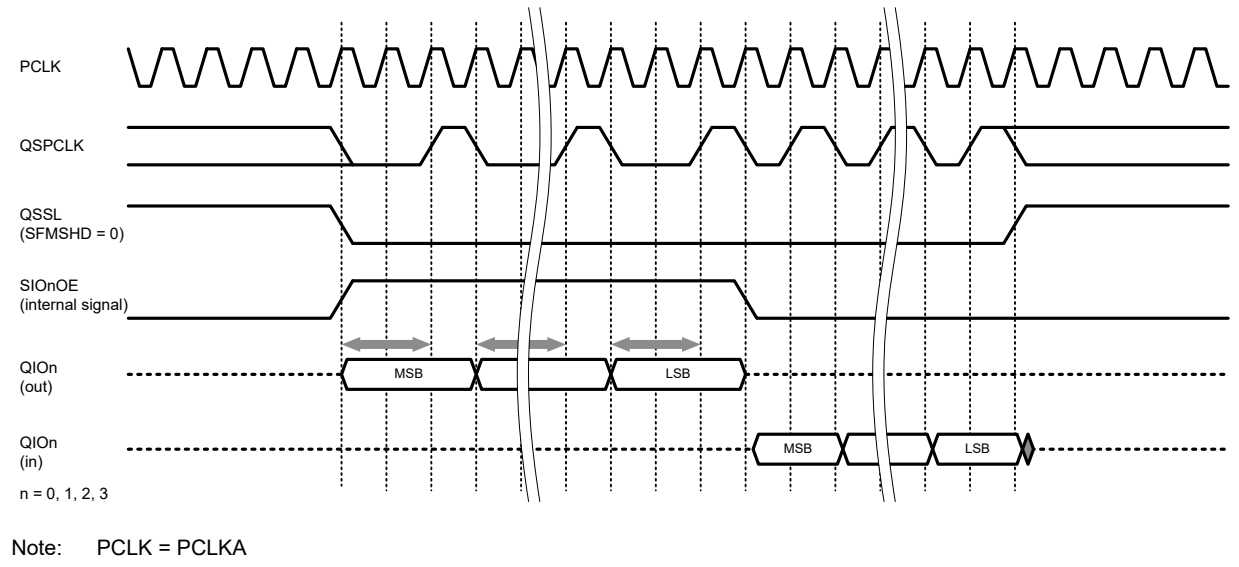

Figure 32.15 Setup time adjustment for serial data output using the SFMOSW bit

32.5.8 Hold Time for Serial Data Output

When a command or address is transmitted to the serial flash memory, the hold time begins on the rising edge of QSPCLK and ends when the serial data makes another transmission. If this hold time is insufficient, it can be extended by 1 PCLKA using the SFMOHW bit in the SFMSMD register. When SFMOHW is 1, the high-level width of QSPCLK during serial data transmission is extended by 1 PCLKA while data is being output from the QSPI. This function has no effect on serial data reception.

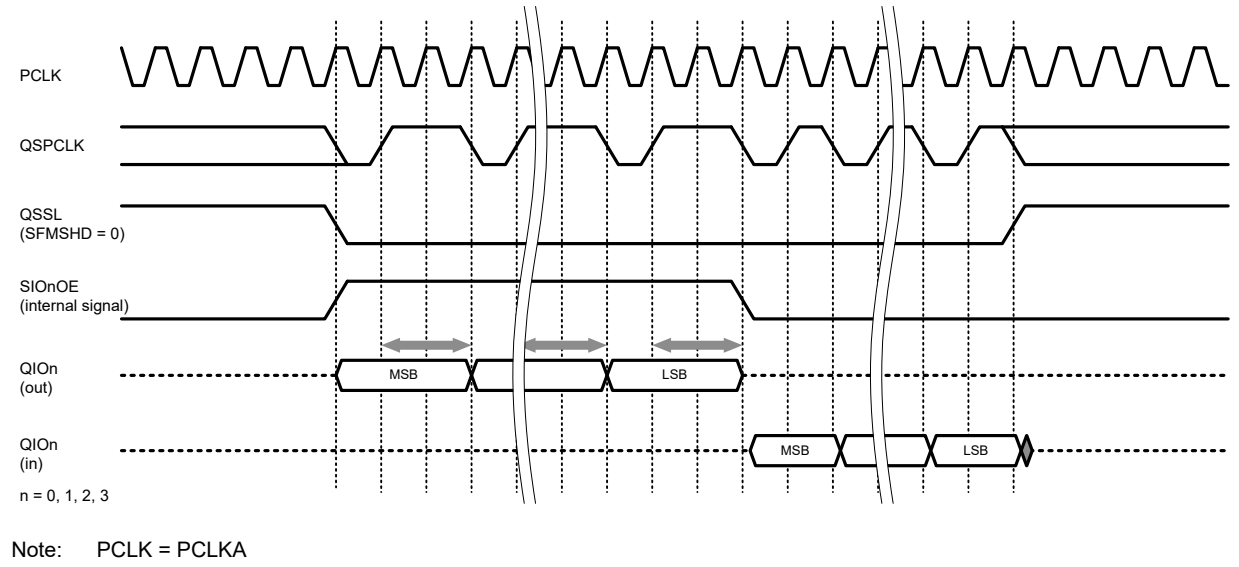

Figure 32.16 Hold time adjustment for serial data output using the SFMOHW bit

32.5.9 Serial Data Receiving Latency

The serial flash outputs data in synchronization with the falling edge of the QSPCLK signal. The QSPI receives that data in synchronization with the falling edge of the subsequent QSPCLK signal. The delay from when the serial flash starts outputting data until the QSPI receives that data is called the receiving latency. The QSPI adds a latency adjustment cycle

immediately before the first data reception cycle in the SPI bus cycle. From the serial flash side, this is seen as an increase in the number of data reception cycles. This added latency adjustment cycle is not generated in the SPI bus cycle without accompanying data reception.

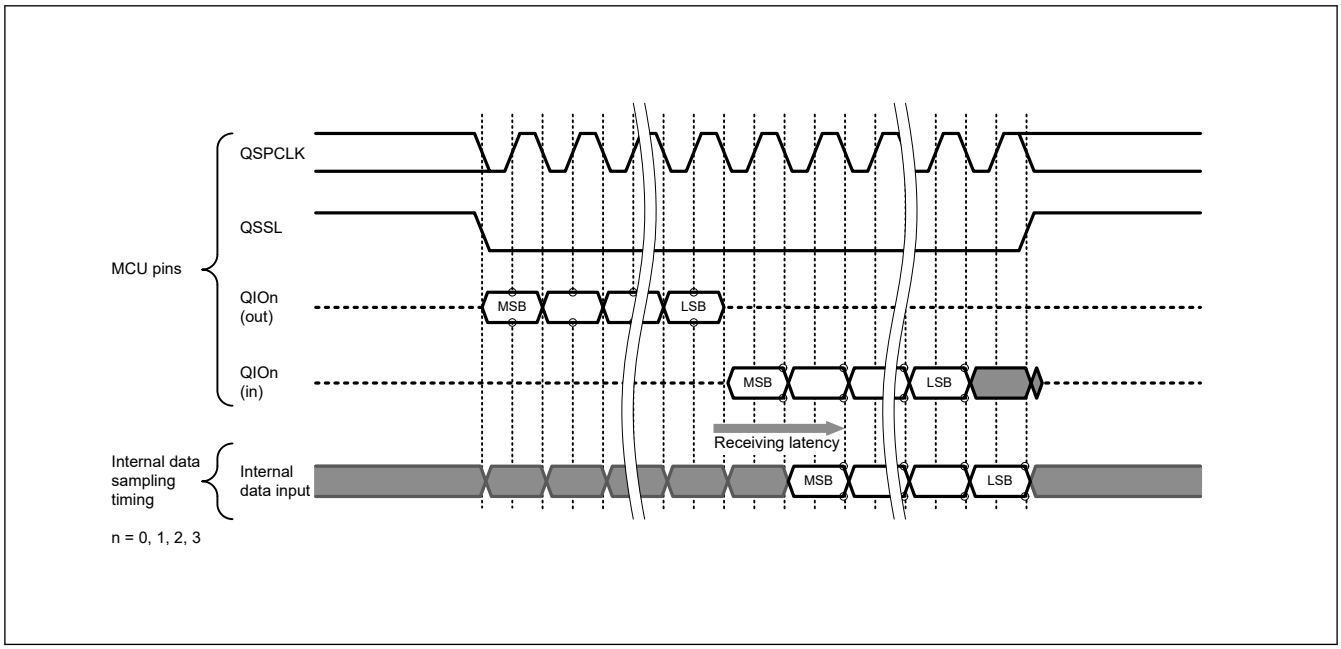

Figure 32.17 Receiving latency

32.6 SPI Instruction Set Used for Serial Flash Memory Access

32.6.1 SPI Instructions That Are Automatically Generated

When the serial flash memory is accessed, an SPI bus cycle using the instructions described in Table 32.6 to Table 32.10 is automatically generated based on the settings in the SFMSAC register and in the SFMSMD register.

Table 32.6 SPI instructions automatically generated when SFMAS[1:0] = 00b

SPI instruction	Instruction code	Address bytes	Dummy cycles	Data bytes	Remarks
Standard Read	0x03*1	1	—	1 to ∞	SFMRM[2:0] = 000b, A8 = 0
	0x0B*1	1	—	1 to ∞	SFMRM[2:0] = 000b, A8 = 1

Note 1. If the SFMSMD.SFMCCE bit is set to 1, the SFMCIC[7:0] bits in the Instruction Code Register (SFMSIC) setting is used as an instruction code.

Table 32.7 SPI instructions automatically generated when SFMAS[1:0] = 01b

SPI instruction	Instruction code	Address bytes	Dummy cycles	Data bytes	Remarks
Standard Read	0x03*1	2	—	1 to ∞	SFMRM[2:0] = 000b

Note 1. If the SFMSMD.SFMCCE bit is set to 1, the SFMSIC.SFMCIC[7:0] setting is used as an instruction code.

Table 32.8 SPI instructions automatically generated when SFMAS[1:0] = 10b (1 of 2)

SPI instruction	Instruction code	Address bytes	Dummy cycles	Data bytes	Remarks
Standard Read	0x03*1	3	—	1 to ∞	SFMRM[2:0] = 000b
Fast Read	0x0B*1	3	8*2	1 to ∞	Selectable: SFMRM[2:0] = 001b
Fast Read Dual Output	0x3B*1	3	8*2	1 to ∞	Selectable: SFMRM[2:0] = 010b
Fast Read Dual I/O	0xBB*1	3	4*2	1 to ∞	Selectable: SFMRM[2:0] = 011b

Table 32.8 SPI instructions automatically generated when SFMAS[1:0] = 10b (2 of 2)

SPI instruction	Instruction code	Address bytes	Dummy cycles	Data bytes	Remarks
Fast Read Quad Output	0x6B*1	3	8*2	1 to ∞	Selectable: SFMRM[2:0] = 100b
Fast Read Quad I/O	0xEB*1	3	6*2	1 to ∞	Selectable: SFMRM[2:0] = 101b

Note 1. If the SFMSMD.SFMCCE bit is set to 1, the SFMSIC.SFMCIC[7:0] setting is used as an instruction code.
Note 2. The number of dummy cycles is configurable by using SFMDN[3:0] bits in the Dummy Cycle Control Register (SFMSDC).

Table 32.9 SPI instructions automatically generated when SFMAS[1:0] = 11b and SFM4BC = 0

SPI instruction	Instruction code	Address bytes	Dummy cycles	Data bytes	Remarks
Standard Read	0x03*1	4	—	1 to ∞	SFMRM[2:0] = 000b
Fast Read	0x0B*1	4	8*2	1 to ∞	Selectable: SFMRM[2:0] = 001b
Fast Read Dual Output	0x3B*1	4	8*2	1 to ∞	Selectable: SFMRM[2:0] = 010b
Fast Read Dual I/O	0xBB*1	4	4*2	1 to ∞	Selectable: SFMRM[2:0] = 011b
Fast Read Quad Output	0x6B*1	4	8*2	1 to ∞	Selectable: SFMRM[2:0] = 100b
Fast Read Quad I/O	0xEB*1	4	6*2	1 to ∞	Selectable: SFMRM[2:0] = 101b

Note 1. If the SFMSMD.SFMCCE bit is set to 1, the SFMSIC.SFMCIC[7:0] setting is used as an instruction code.
Note 2. The number of dummy cycles is configurable by using the SFMSDC.SFMDN[3:0] bits.

Table 32.10 SPI instructions automatically generated when SFMAS[1:0] = 11b and SFM4BC = 1

SPI instruction	Instruction code	Address bytes	Dummy cycles	Data bytes	Remarks
Standard Read	0x13*1	4	—	1 to ∞	SFMRM[2:0] = 000b
Fast Read	0x0C*1	4	8*2	1 to ∞	Selectable: SFMRM[2:0] = 001b
Fast Read Dual Output	0x3C*1	4	8*2	1 to ∞	Selectable: SFMRM[2:0] = 010b
Fast Read Dual I/O	0xBC*1	4	4*2	1 to ∞	Selectable: SFMRM[2:0] = 011b
Fast Read Quad Output	0x6C*1	4	8*2	1 to ∞	Selectable: SFMRM[2:0] = 100b
Fast Read Quad I/O	0xEC*1	4	6*2	1 to ∞	Selectable: SFMRM[2:0] = 101b

Note 1. If the SFMSMD.SFMCCE bit is set to 1, the SFMSIC.SFMCIC[7:0] setting is used as an instruction code.
Note 2. The number of dummy cycles is configurable by using the SFMSDC.SFMDN[3:0] bits..

32.6.2 Standard Read Instruction

The standard Read instruction is a common read instruction supported by most serial flash memory. When an SPI bus cycle starts, the QSSL signal (serial flash memory select) is asserted, and the instruction code (0x03 or 0x13)*1 is output. Next, an address with a width of 1 to 4 bytes, specified in the SFMAS[1:0] bits in the SFMSAC register, is transmitted. Data is then received.

This standard Read instruction is selected in the initial QSPI settings.

Note 1. Many 4-KB serial flash memory devices have an address field not larger than 1 byte (A7-A0) to minimize the overhead and to receive A8 information from bit 3 of the Read instruction code. To support these devices, the QSPI only outputs A8 (address bit 8) to bit [3] of the standard Read instruction code when an address width of 1 byte is specified (SFMAS[1:0] = 00). This means that 0x0B might be output instead of 0x03 as the standard Read instruction code. This code duplicates the Fast Read instruction code. However, for most of the 2-KB or smaller serial flash memory, with an address width of 1 byte, bit 3 of a command is designed to be excluded from decoding as a don't-care bit, so such a Read instruction code is recognized correctly as the standard Read instruction code. In rare cases, some serial flash memory allow bit 3 to be decoded. When such a serial flash memory is connected, configure your application to avoid access resulting in A8 = 1.

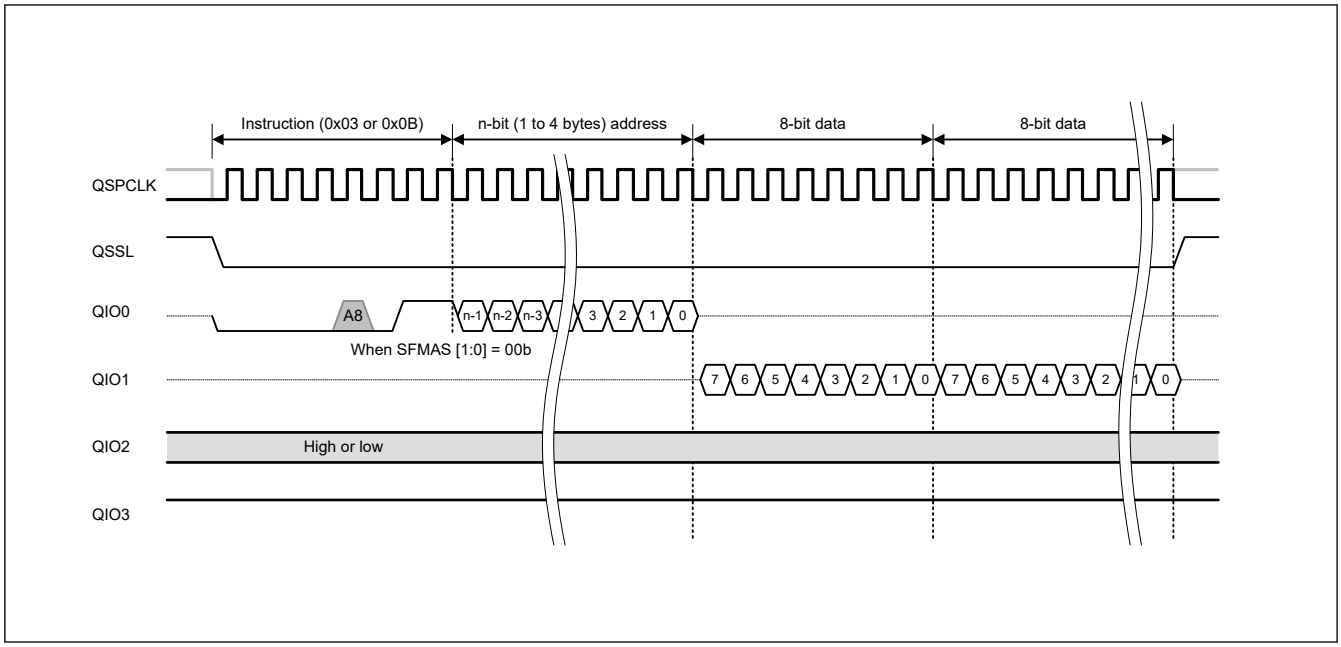

Figure 32.18 Standard Read bus cycle

32.6.3 Fast Read Instruction

The Fast Read instruction is a read instruction that supports a higher communication clock speed than the standard Read instruction. When an SPI bus cycle starts, the QSSL signal is asserted, and the instruction code (0x0B or 0x0C) is output. Next, an address with a width of 1 to 4 bytes specified by the SFMSAC.SFMAS [1: 0] bits is transmitted, a dummy cycle specified by the SFMSDC register is generated, then the data is received.

The first two dummy cycles are used to select the XIP mode. When the XIP mode is selected, the same instruction used this time is applied to the next SPI bus cycle, and the instruction code is not output the next SPI bus cycle. For details on the XIP mode, see section 32.8. XIP Control.

Switching to the Fast Read instruction is controlled in the SFMSMD register.

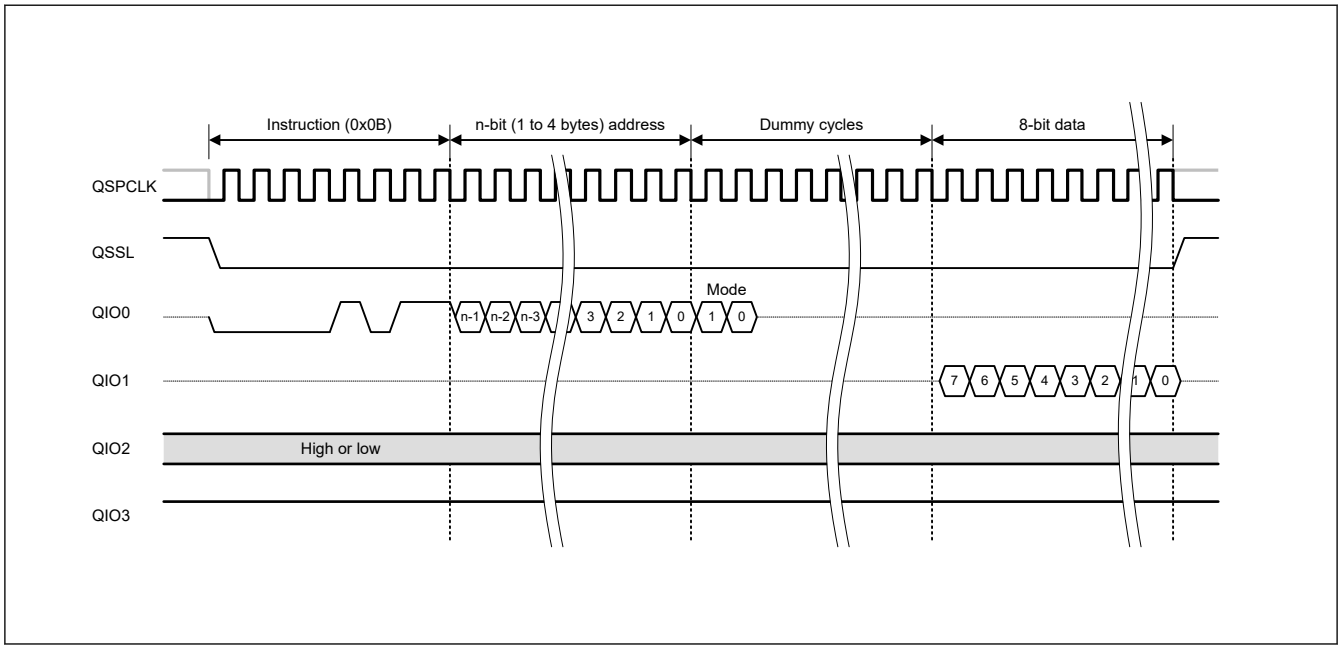

Figure 32.19 Fast Read bus cycle

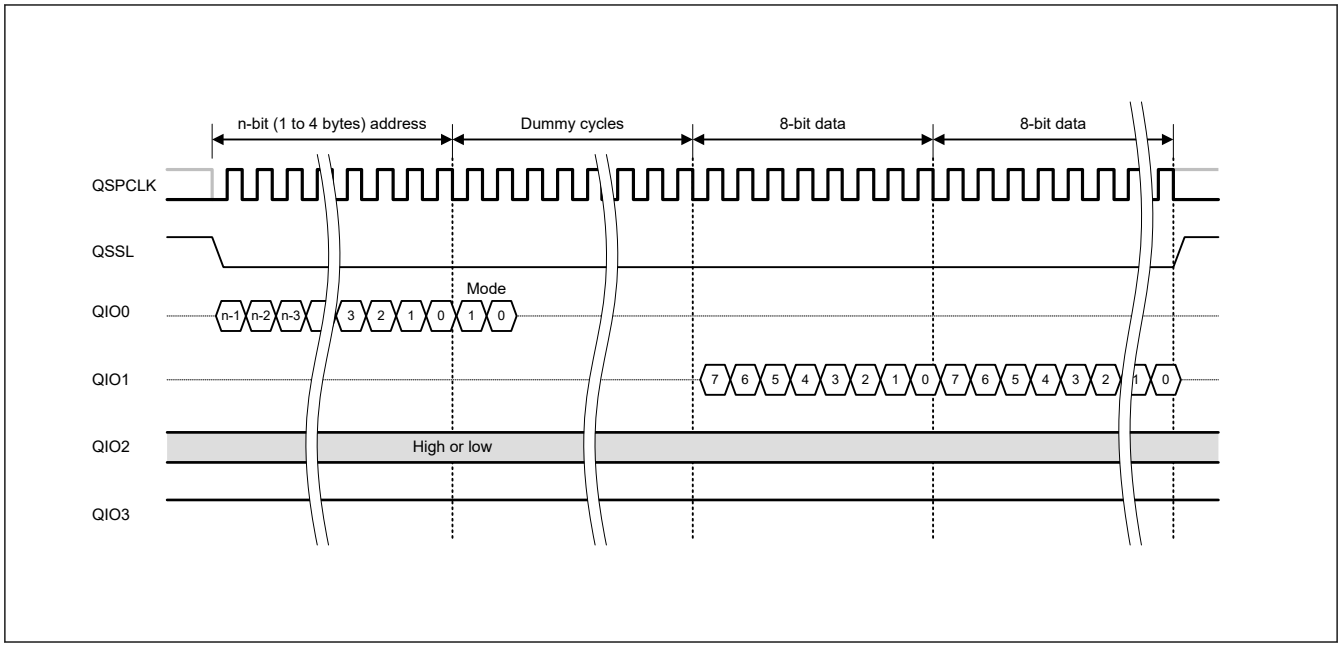

Figure 32.20 Fast Read bus cycle in XIP mode

Note: To use the Fast Read instruction, a serial flash memory that supports Fast Read transfers is required.

32.6.4 Fast Read Dual Output Instruction

The Fast Read Dual Output instruction is a read instruction that uses two signal lines to receive data. When the SPI bus cycle starts, the QSSL signal is asserted. The instruction code (0x3B or 0x3C) and an address with a width of 1 to 4 bytes, specified by the SFMSAC.SFMAS [1: 0] bits are transmitted from the QIO0 pin in the extended SPI protocol, and transmitted from the QIO0 and QIO1 pins in the Dual-SPI protocol. Next, a certain number of dummy cycles, specified in the SFMSDC register, is generated. Data is then received through the QIO0 and QIO1 pins. Even bit data is received from the QIO0 pin and odd bit data is received from the QIO1 pin.

The first two dummy cycles are used to select the XIP mode. When the XIP mode is selected, the same instruction used this time is applied to the next SPI bus cycle, and the instruction code is not output the next SPI bus cycle. For details on the XIP mode, see section 32.8. XIP Control.

Switching to Fast Read Dual Output is controlled in the SFMSMD register.

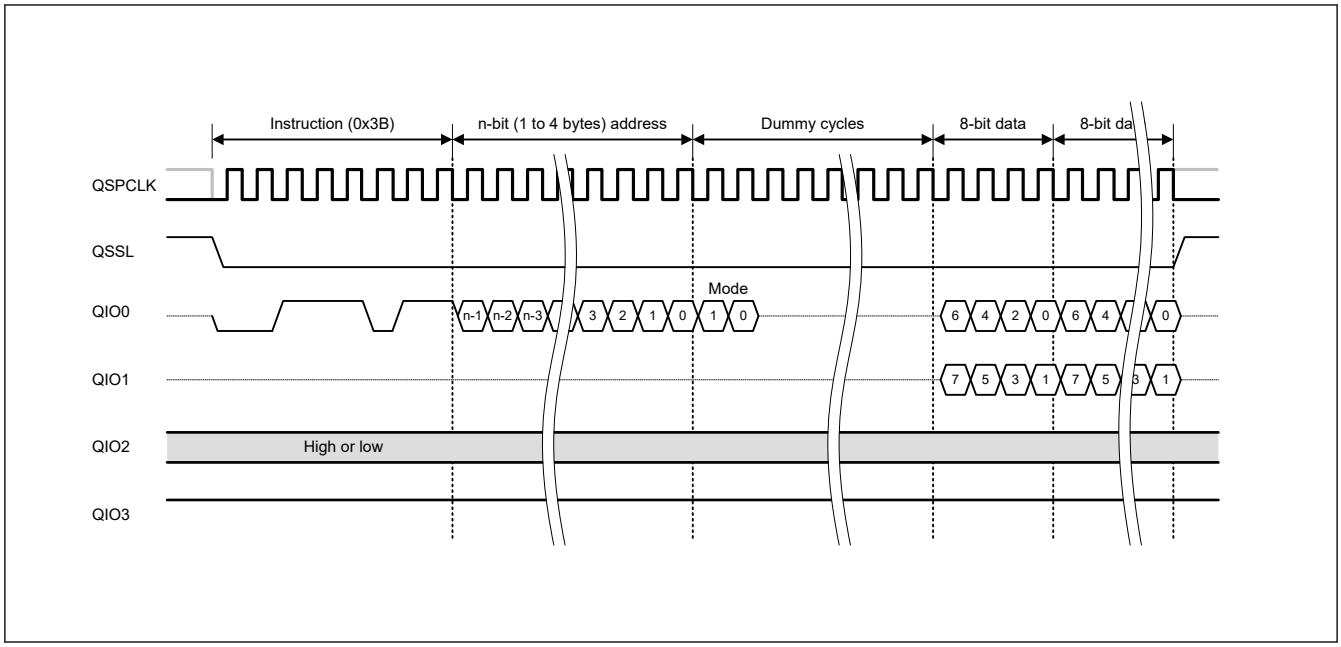

Figure 32.21 Fast Read Dual Output bus cycle (with extended SPI protocol)

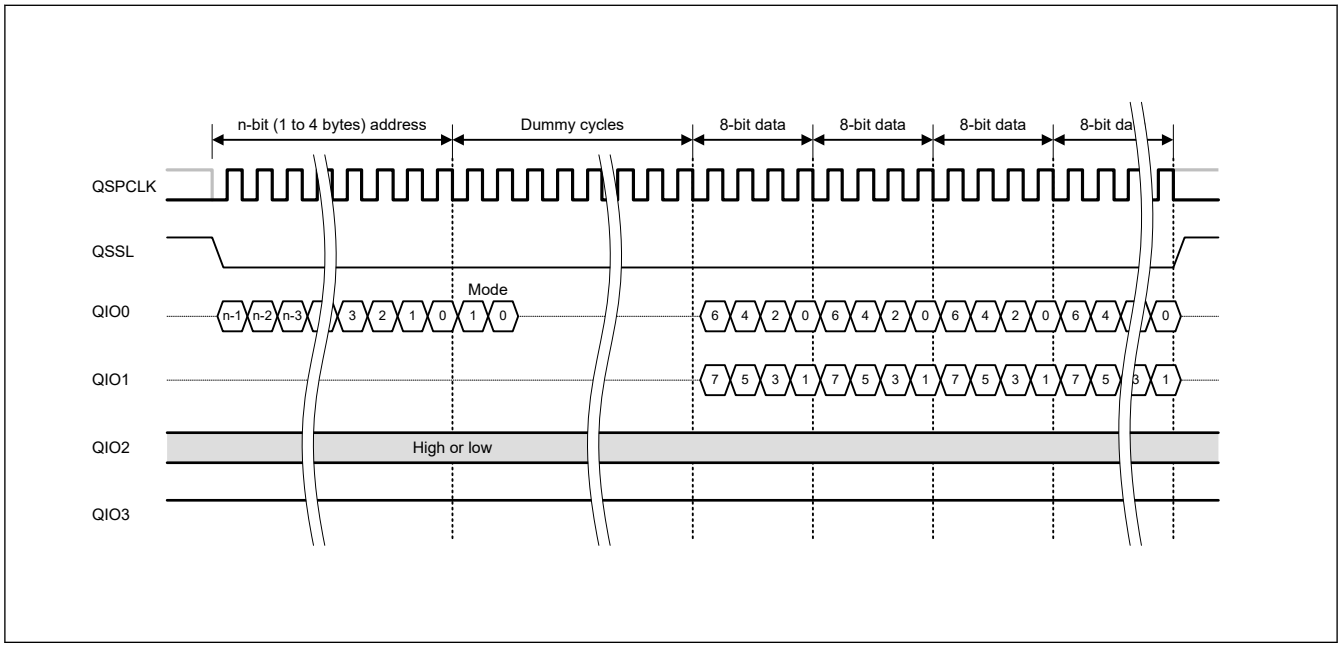

Figure 32.22 Fast Read Dual Output bus cycle in XIP mode (with extended SPI protocol)

Note: To use the Fast Read Dual Output instruction, a serial flash memory that supports Fast Read Dual Output transfers is required.

32.6.5 Fast Read Dual I/O Instruction

The Fast Read Dual I/O instruction is a read instruction that uses two signal lines to transmit an address and receive data. When the SPI bus cycle starts, the QSSL signal is asserted, and the instruction code (0xBB / 0xBC) is transmitted from QIO0 pin in the extended SPI protocol and from QIO0, and QIO1 pins in the Dual SPI protocol. Next, an address with a width of 1 to 4 bytes, specified in the SFMAS[1:0] bits in the SFMSAC register, is transmitted through the QIO0 and QIO1 pins, and a certain number of dummy cycles, specified in the SFMSDC register, is generated. Data is then is received through the QIO0 and QIO1 pins. Address and dummy cycle transmission and data reception are performed through the QIO0 pin for even bits and through the QIO1 pin for odd bits.

The first two dummy cycles are used to select the XIP mode. When the XIP mode is selected, the same instruction used this time is applied to the next SPI bus cycle, and the instruction code is not output the next SPI bus cycle. For details on the XIP mode, see section 32.8. XIP Control.

Switching to Fast Read Dual I/O is controlled in the SFMSMD register.

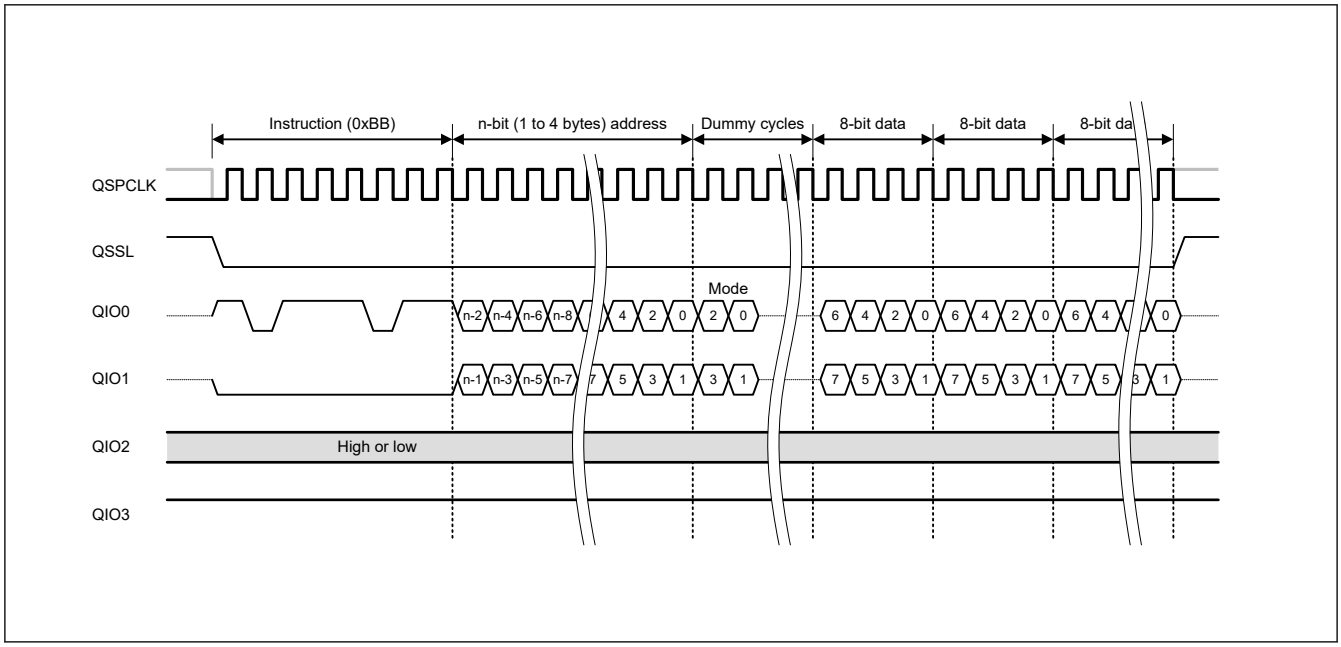

Figure 32.23 Fast Read Dual I/O bus cycle (with extended SPI protocol)

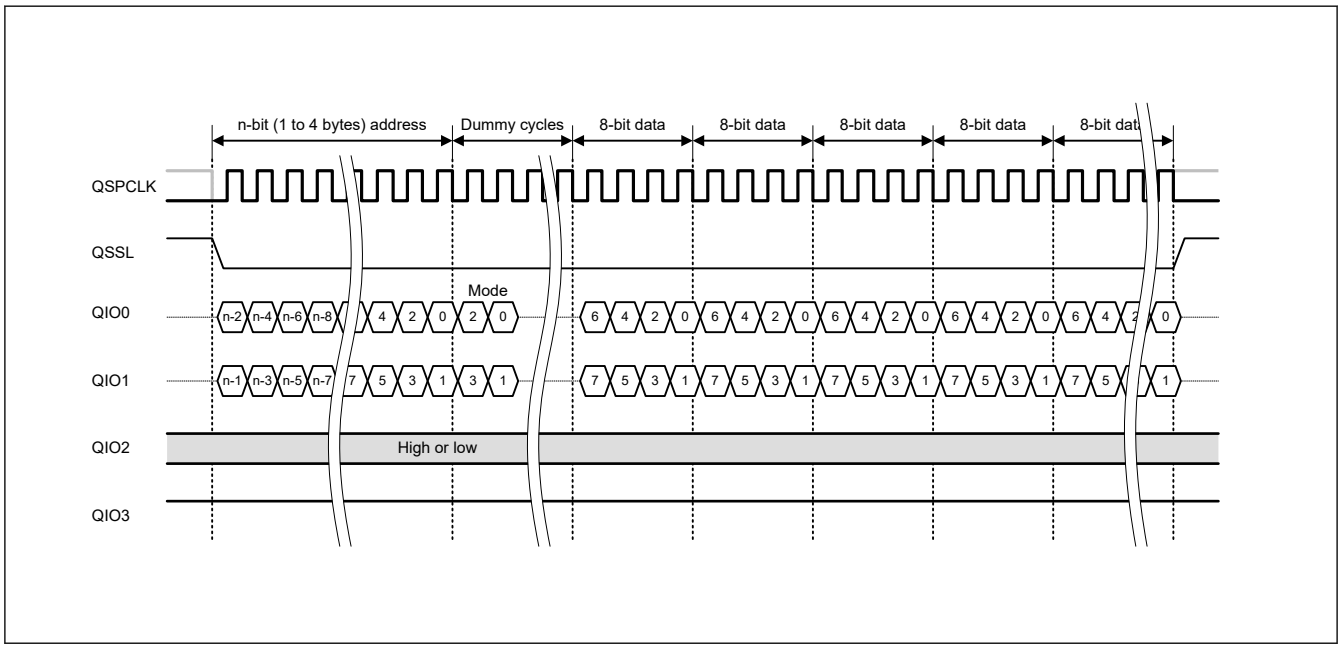

Figure 32.24 Fast Read Dual I/O bus cycle in XIP mode

Note: To use the Fast Read Dual I/O instruction, a serial flash memory that supports Fast Read Dual I/O transfers is required.

32.6.6 Fast Read Quad Output Instruction

The Fast Read Quad Output instruction is a read instruction that uses four signal lines to receive data. When the SPI bus cycle starts, the QSSL signal is asserted. The instruction code (0x6B or 0x6C) and an address with a width of 1 to 4 bytes, specified in the SFMAS[1:0] bits in the SFMSAC register, are output from the QIO0 pin. Next, a certain number of dummy

cycles, specified in the SFMDN[3:0] bits in the SFMSDC register, are generated. Data is then received through the QIO0, QIO1, QIO2, and QIO3 pins.

The first two dummy cycles are used to select the XIP mode. When the XIP mode is selected, the same instruction used this time is applied to the next SPI bus cycle, and the instruction code is not output the next SPI bus cycle. For details on the XIP mode, see section 32.8. XIP Control.

Switching to Fast Read Quad Output is controlled in the SFMSMD register.

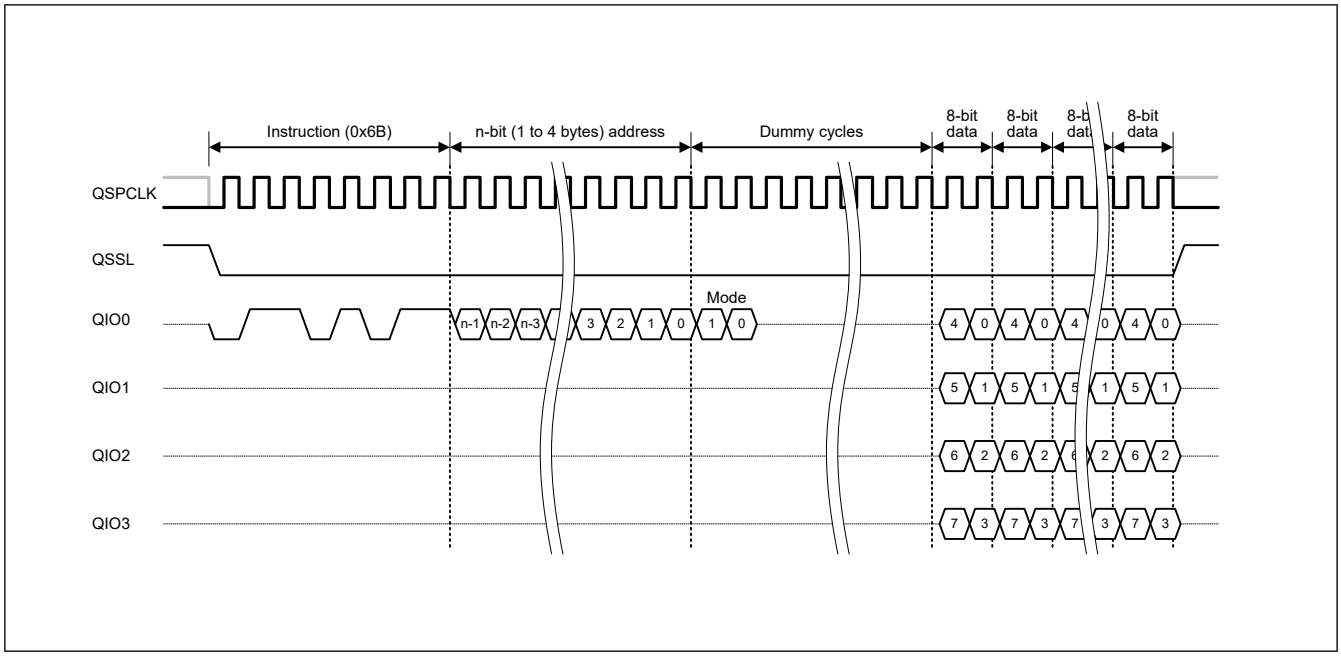

Figure 32.25 Fast Read Quad Output bus cycle (with extended SPI protocol)

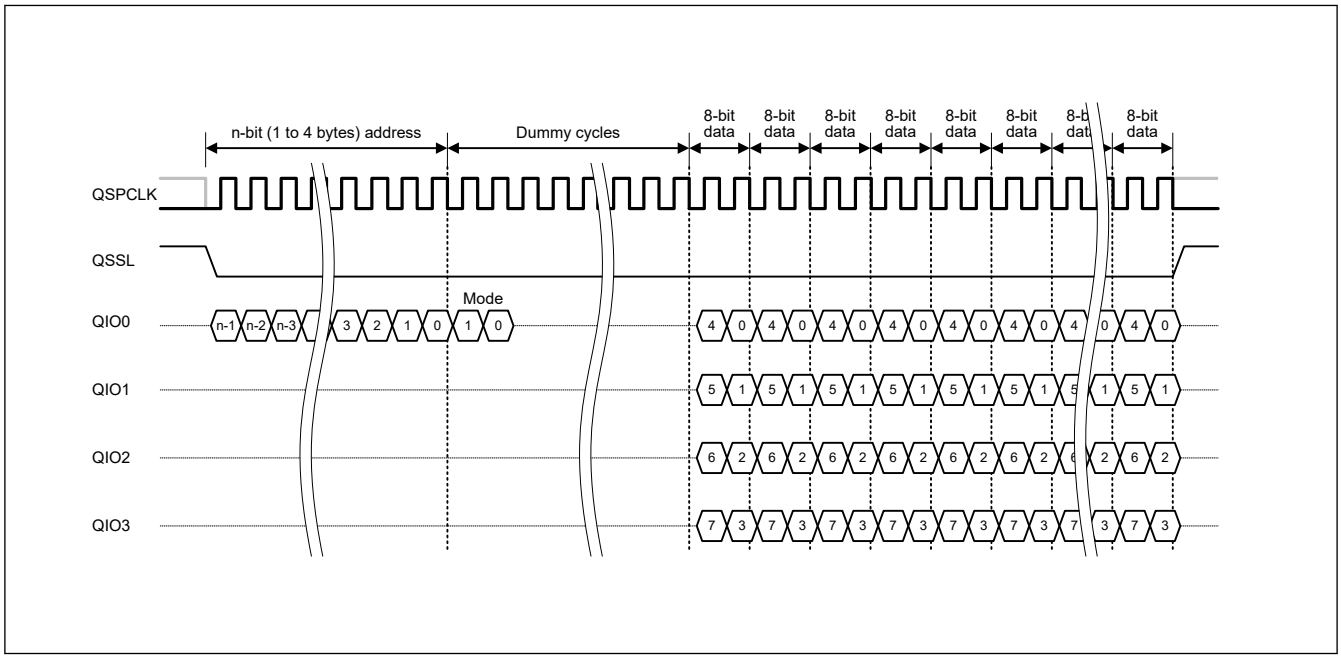

Figure 32.26 Fast Read Quad Output bus cycle in XIP mode (with extended SPI protocol)

Note: To use Fast Read Quad Output, a serial flash memory that supports Fast Read Quad Output transfer is required.

32.6.7 Fast Read Quad I/O Instruction

The Fast Read Quad I/O instruction is a read instruction that uses four signal lines to transmit an address and receive data. When the SPI bus cycle starts, the QSSL signal is asserted, and the instruction code (0xEB / 0xEC) is transmitted from

QIO0 pin in the extended SPI protocol and from QIO0, QIO1, QIO2, and QIO3 pins in the Quad-SPI protocol. Next, an address with a width of 1 to 4 bytes, specified in the SFMAS[1:0] bits in the SFMSAC register, is transmitted through the QIO0, QIO1, QIO2, and QIO3 pins, and a certain number of dummy cycles, specified in the SFMDN[3:0] bits in the SFMSDC register, is generated. Data is then received through the QIO0, QIO1, QIO2, and QIO3 pins.

The first two dummy cycles are used to select the XIP mode. When the XIP mode is selected, the same instruction used this time is applied to the next SPI bus cycle, and the instruction code is not output the next SPI bus cycle. For details on the XIP mode, see section 32.8. XIP Control.

Switching to Fast Read Quad I/O is controlled in the SFMSMD register.

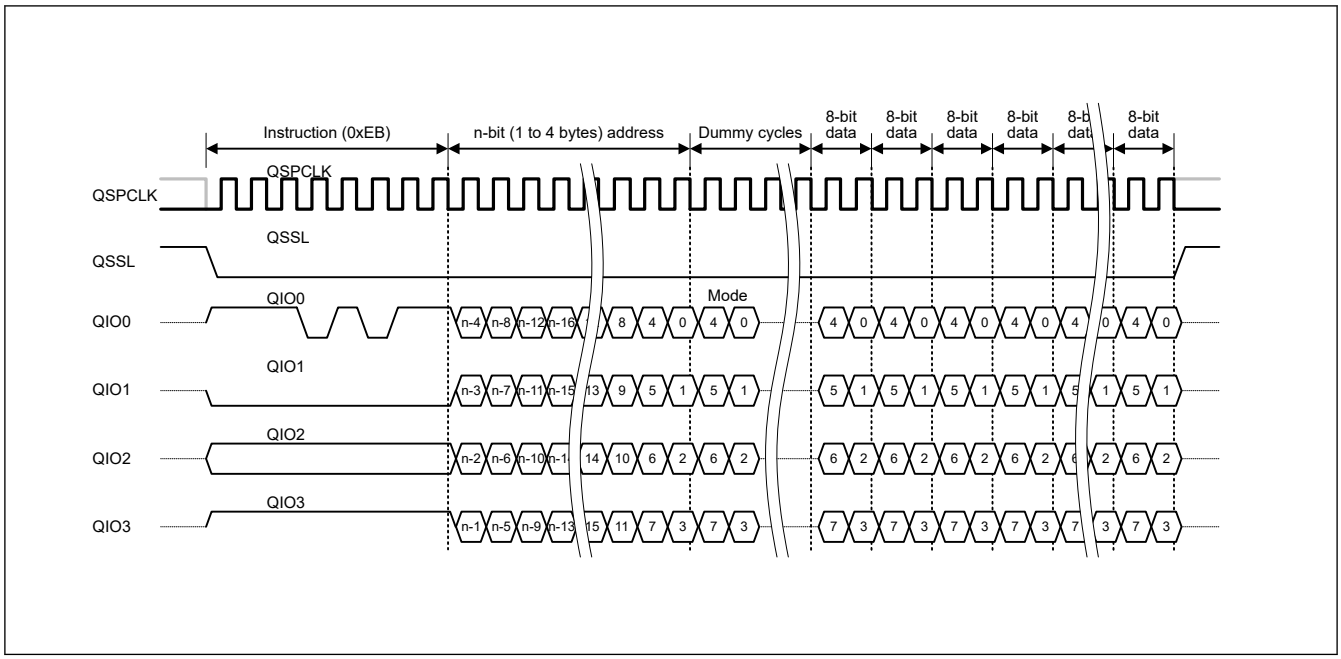

Figure 32.27 Fast Read Quad I/O bus cycle

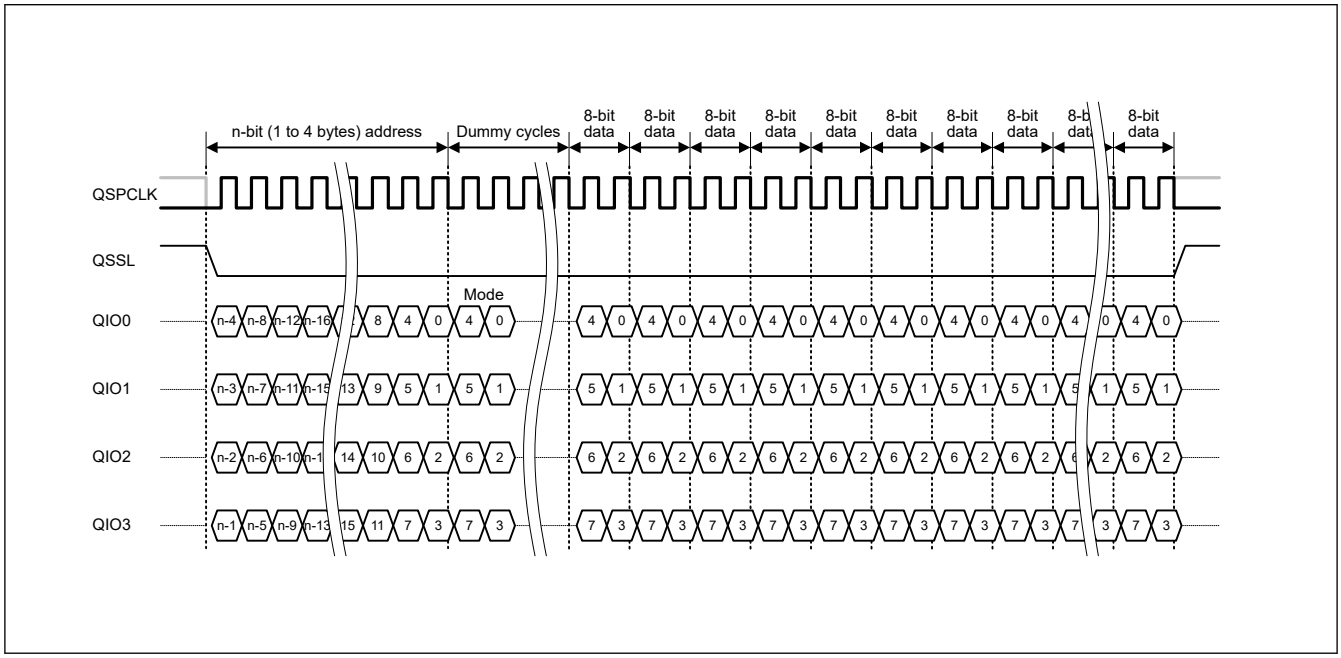

Figure 32.28 Fast Read Quad I/O bus cycle in XIP mode

Note: To use the Fast Read Quad I/O instruction, a serial flash memory that supports Fast Read Quad I/O transfers is required.

32.6.8 Enter 4-Byte Mode Instruction

The Enter 4-Byte Mode instruction sets the serial flash address width to 4 bytes. When the SPI bus cycle starts, the serial flash select signal is asserted, and the instruction code (0xB7) is output.

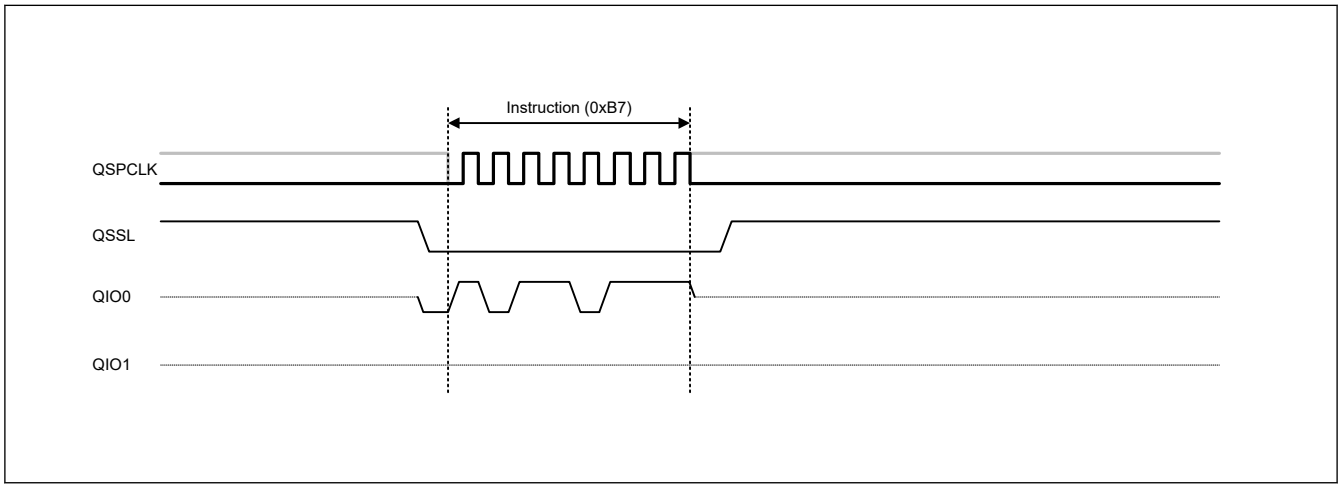

Figure 32.29 Enter 4-Byte Mode bus cycle

Note: The Enter 4-Byte Mode instruction is issued regardless of whether the serial flash is in 3- or 4-byte mode.

32.6.9 Exit 4-Byte Mode Instruction

The Exit 4-Byte Mode instruction sets the serial flash address width to 3 bytes. When the SPI bus cycle starts, the serial flash select signal is asserted, and the instruction code (0xE9) is output.

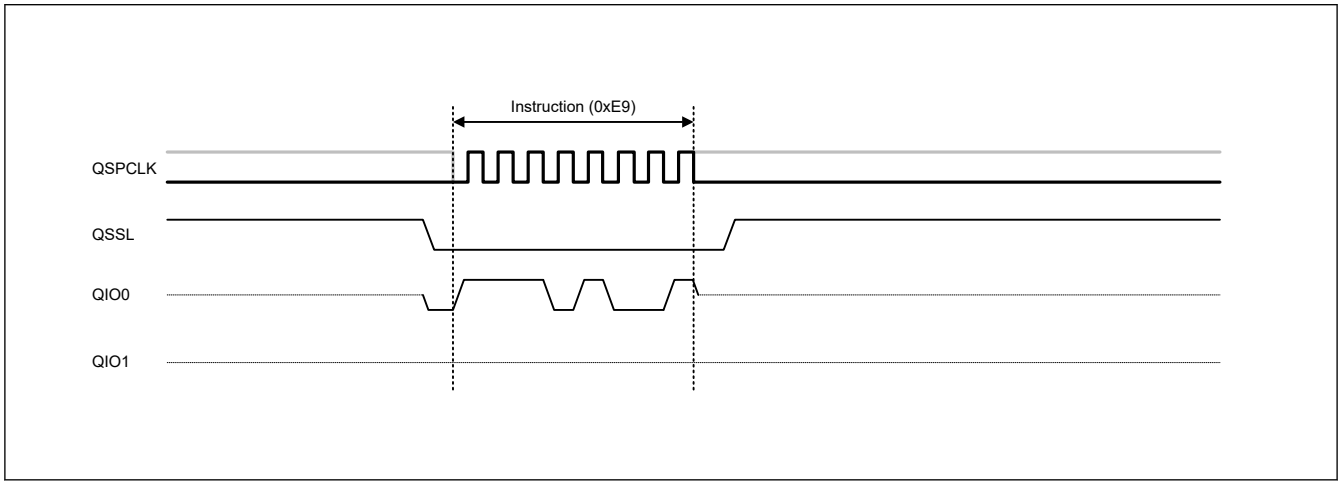

Figure 32.30 Exit 4-Byte Mode bus cycle

Note: The Exit 4-Byte Mode instruction is issued regardless of whether the serial flash is in 3- or 4-byte mode.

32.6.10 Write Enable Instruction

The Write Enable instruction enables changing of the serial flash address width. When the SPI bus cycle starts, the serial flash select signal is asserted, and the instruction code (0x06) is output.

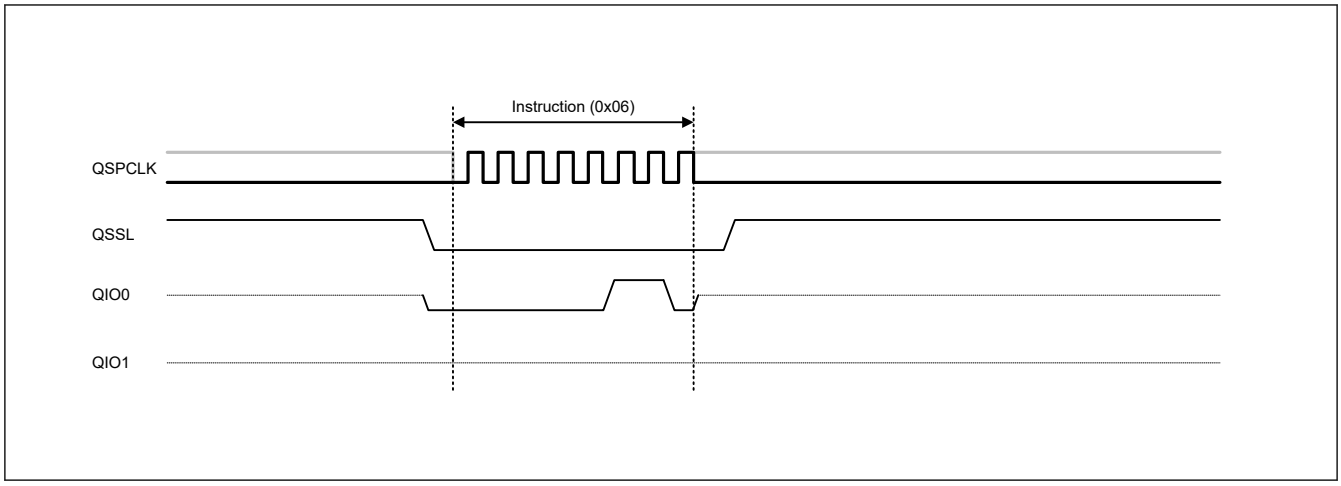

Figure 32.31 Write Enable bus cycle

32.7 SPI Bus Cycle Arrangement

32.7.1 Serial Flash Memory Read Based on Individual Conversion

ROM read bus cycles are individually converted to SPI bus cycles on a one-to-one basis. When a ROM read bus cycle is detected, the QSSL signal is asserted, and an SPI bus cycle starts. When the data receiving is finished from the serial flash memory, the QSSL signal is negated and the SPI bus cycle is complete.

When the next ROM read bus cycle is detected, the QSSL signal set by the SFMSSC.SFMSW[3: 0] bits is asserted again, then the next SPI bus cycle starts.

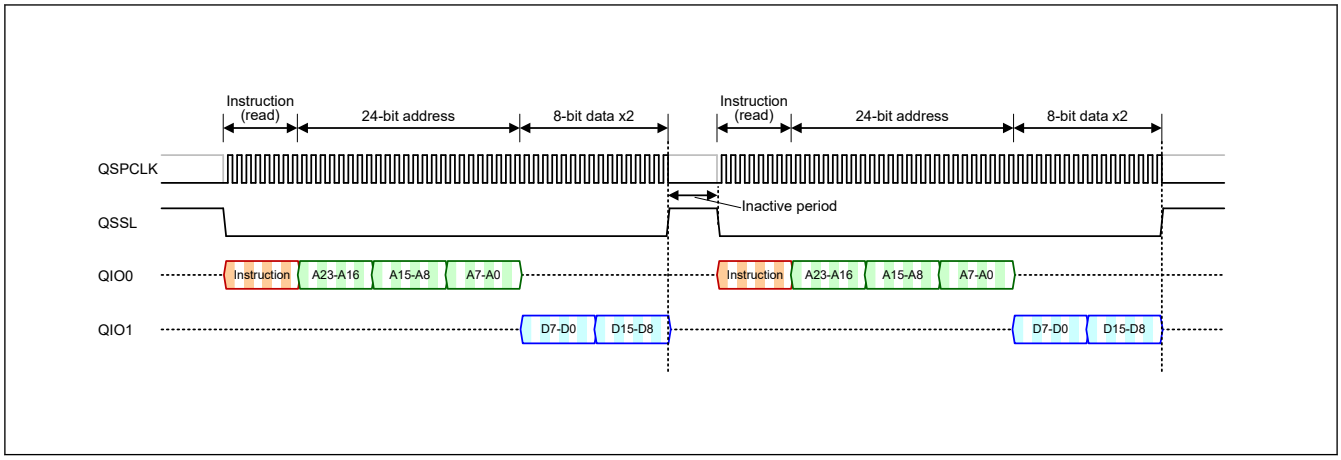

Figure 32.32 Successive data read operations based on individual conversion

32.7.2 Serial Flash Memory Read Using the Prefetch Function

In operations such as CPU instruction execution and block data transfer, data is often read in ascending order from contiguous addresses. Serial flash memory provides the ability to repeat data reception without reissuing an instruction code and address. To work with this function, the QSPI has a prefetch function for continuous data reception. However, if the CPU issues a flash read request for discontinuous flash addresses, SPI bus cycles are separated from each other, disabling the prefetch function.

To enable the prefetch function of the QSPI, set the SFMPFE bit in the SFMSMD register to 1. When the prefetch function is enabled, data is received continuously and stored in the prefetch buffer of the QSPI, without waiting for another flash read request. When the CPU issues a flash read request, an address check is made. If an address match is confirmed, the data in the buffer is passed to the CPU. If an address mismatch is detected, the data in the buffer is discarded and a new SPI bus cycle is issued.

The buffer for prefetching is 18 bytes long. When this buffer is full, the SPI bus cycle is ended. When the buffer data is read to create free space, a new SPI bus cycle is automatically started to resume prefetching.

The prefetch function allows for efficient transfer operations when data is read in ascending order from contiguous addresses, as in instruction fetch and block data transfer.

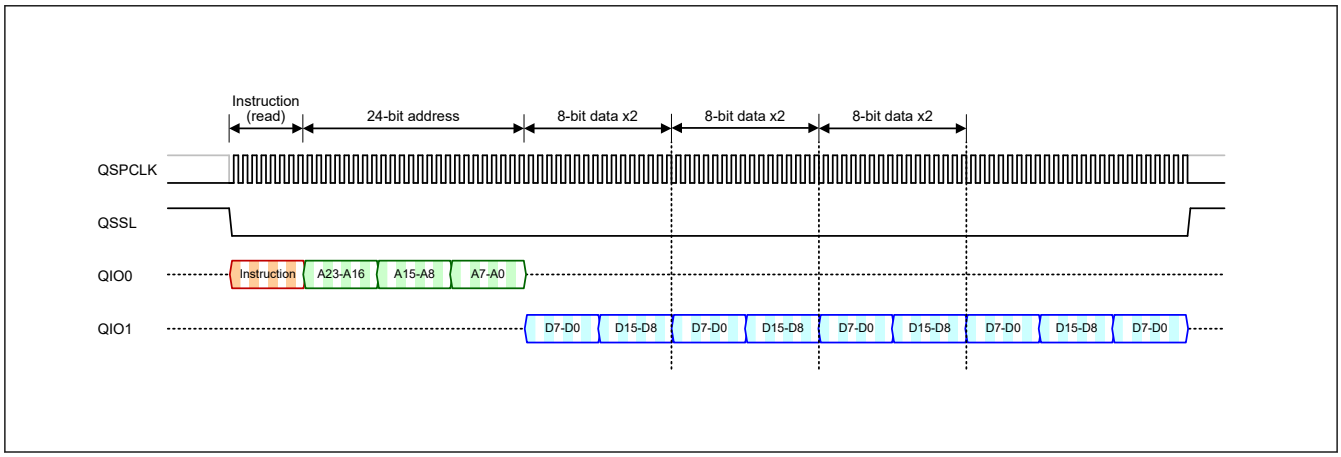

Figure 32.33 Successive data read operations using the prefetch function

32.7.3 Halt of Prefetching

If a serial flash memory read request for discontinuous addresses is issued when continuous data is being received by the prefetch function, the transfer of continuous data being made is halted and a new SPI bus cycle is started. Usually, such a halt of serial transfer occurs on data reception byte boundaries. However, if the SFMPAE bit in the SFMSMD register is set to 1, the halt can occur on locations other than byte boundaries.

32.7.4 Direct Specification of Prefetch Destination

When the prefetch function is enabled (SFMSMD.SFMPFE = 1), when writing to the QSPI window area occurs, after the writing is completed, prefetching starts from the write start address. Writes to serial flash memory cannot be performed.

Combining this function with described in section 32.7.5. Prefetch State Polling, can reduce the load on the internal bus when data is read from a low-speed serial flash memory.

Note: Writing to the QSPI window area with a data size of 2 bytes or more causes a hardfault.

32.7.5 Prefetch State Polling

A read by CPU from a low-speed serial flash memory causes the CPU system bus to be occupied until completion of the SPI reception bus cycle. The prefetch state polling function is provided to reduce this load.

The PFOFF bit in the Status Register (SFMSST) register indicates the state of the prefetch function, and the PFCNT[4:0] bits in the SFMSST register indicate the number of data bytes already prefetched. Place the polling program in the SRAM of this device.

```
//
// copy 1K byte (32bit x 256 word) data from serial flash to internal SRAM
//
unsigned long *sptr; // pointer for the serial flash
unsigned long *dptr; // pointer for the destination
int i;

SFMSMD |= 0x0040; // set SFMPFE bit to enable prefetch
*( (volatile unsigned char *) sptr ) = 0; // make the TAG valid to start prefetch

for ( i = 0 ; i < 256 ; i++ ){
while ( ( SFMSST & 0x00FF ) < 0x04 ){}; // waiting for 4-byte data to be received
*(dptr++) = *(sptr++);
}
```

Note: When executing a polling program, place the program outside of the serial flash memory. If the polling program is executed when the program is placed on the serial flash memory, the prefetch target frequently switches to an instruction code. This eliminates the effect of polling, and an infinite loop can result because the prefetch buffer is not filled.

32.7.6 SPI Bus Cycle Extension Function

If the SFMSE[1:0] bits in the SFMSMD register are set to a value other than 00b, the QSPI waits for the next flash read. At this time, the QSPCLK signal stops, the QSSL signal is kept active low even after data is obtained from the serial flash memory, and the SPI bus cycle is suspended.

If the address of the next flash read is contiguous in ascending order, the toggling of the QSPCLK signal is restarted to continue reception of subsequent data. If the address of the next flash read is not contiguous in ascending order, the QSSL signal is driven high once to end the SPI bus cycle being suspended. A new SPI bus cycle is then started.

When data is read intermittently from ascending order contiguous addresses, this function enables an efficient transfer operation to be performed by reducing the overhead for instruction code and address transmission.

The SPI bus cycle extension time is selectable in the SFMSE[1:0] bits in the SFMSMD register. When the specified extension time elapses, the QSSL signal returns to the high level to automatically end the SPI bus cycle being suspended. If the SFMSE[1:0] bits are set to 11b, QSSL is extended infinitely. This increases the power consumption of the serial flash memory.

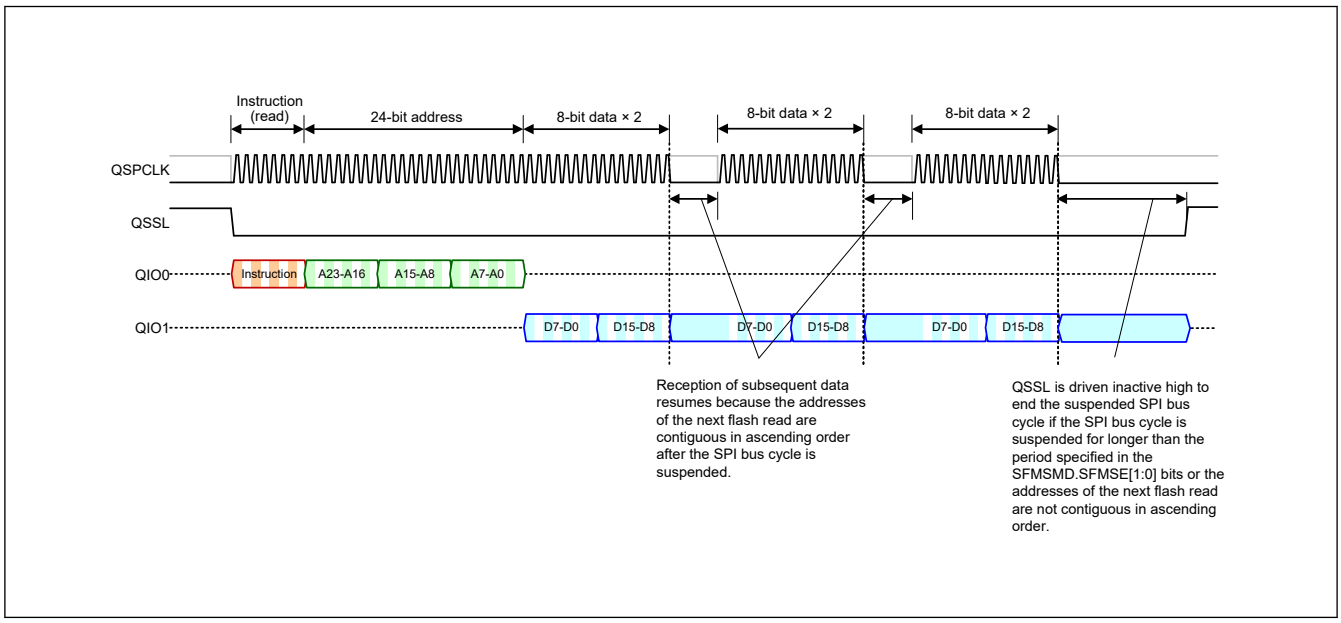

Figure 32.34 Successive data read operations using the SPI bus cycle extension

32.8 XIP Control

Some serial flash memory devices allow latencies to be reduced by skipping instruction code reception for flash reads. This instruction code skip function is selected in mode data received during the dummy cycle period of the previous serial bus cycle.

In the dummy cycle of the Fast Read instructions, the QSPI controls the XIP mode of the serial flash memory by using the serial data signal to send the mode data set in the SFMXD[7:0] bits in the SFMSDC register during the first 2 cycles, as shown in Figure 32.35.

The mode data to enable the XIP mode differs for each serial flash memory. Accordingly, set the appropriate mode data in the SFMXD[7:0] bits.

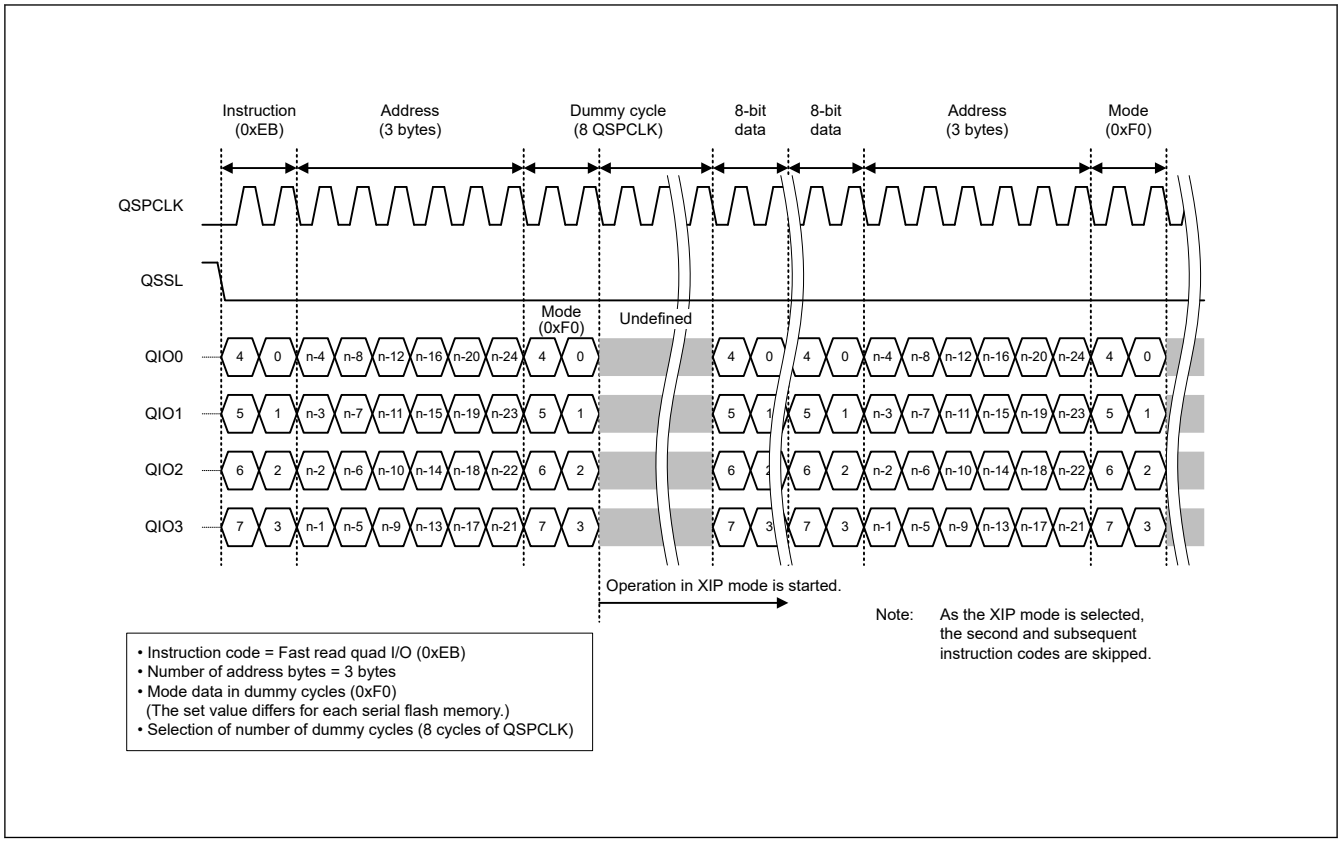

Figure 32.35 XIP mode control data

32.8.1 Setting XIP Mode

To start XIP mode in serial flash memory, perform the following register settings:

- Set a mode data value in the SFMXD[7:0] bits in the SFMSDC register.[*1]
- Set the SFMXEN bit in the SFMSDC register to 1.

In the dummy cycle of the first fast read cycle after these registers are set, the mode data value set in the register is transferred. From that point, XIP mode is enabled in the serial flash memory. To confirm the current XIP mode status, read the SFMXST flag in the SFMSDC register.

Note 1. In the SFMXD[7:0] bits in the SFMSDC register, set the mode data that follows the specifications for the actual serial flash memory.

The following figure shows an example of the XIP mode setting procedure.

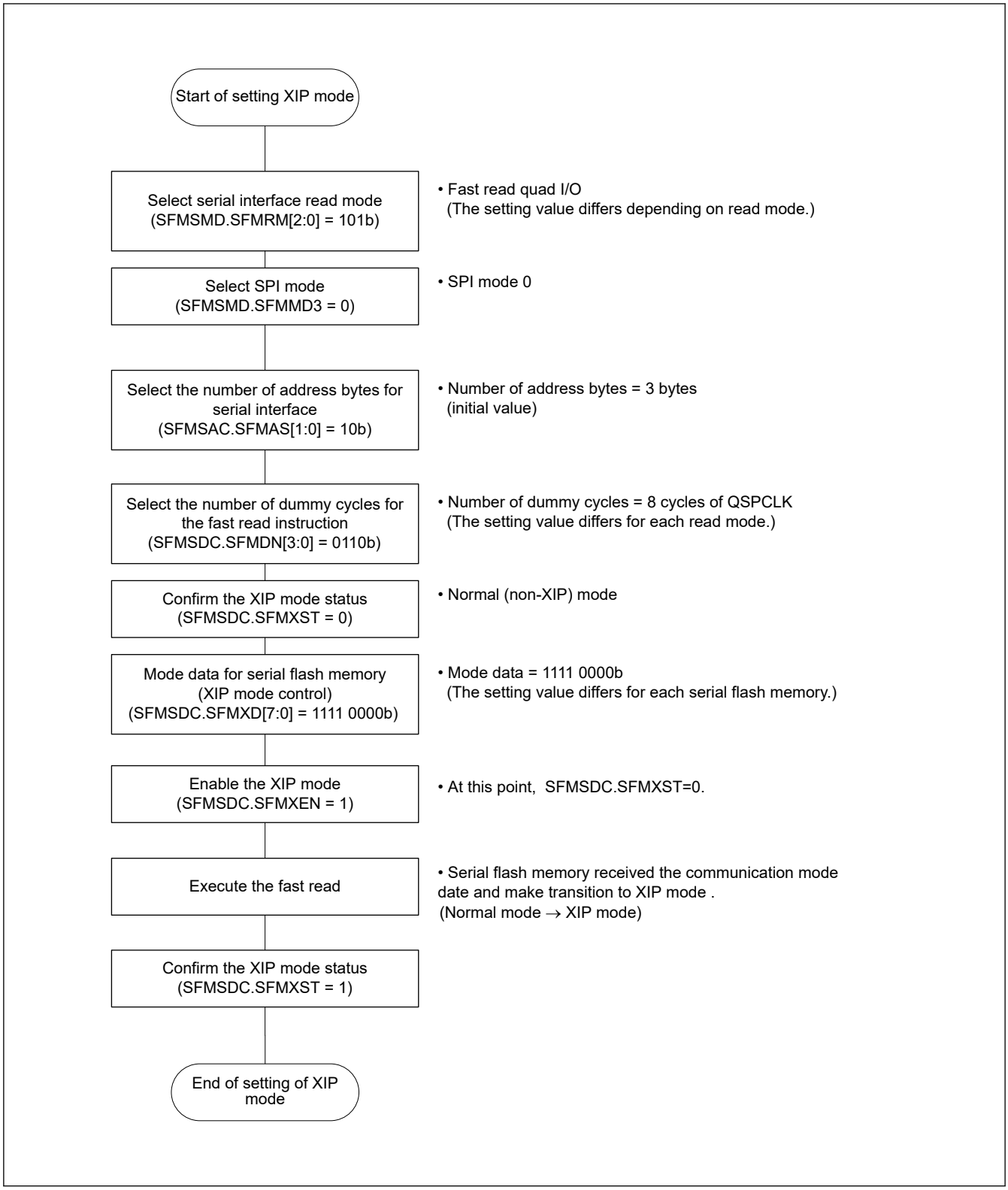

Figure 32.36 Flowchart of XIP Mode

32.8.2 Releasing the XIP Mode

To release XIP mode in serial flash memory, perform the following register setting:

- Set the mode data value to disable XIP mode in SFMSDC.SFMXD [7: 0] bits[*1]
- Set the SFMXEN bit in the SFMSDC register to 0.

In the dummy cycle of the first fast read cycle after this register is set, The mode data value that disables the XIP mode set in the register is transferred. From that point, XIP mode is disabled in the serial flash memory. To confirm the current XIP mode status, read the SFMXST flag in the SFMSDC register.

Note 1. Set the mode data in the SFMSDC.SFMXD [7: 0] bits according to the specifications of the serial flash memory.

Figure 32.37 shows an example of the procedure for releasing XIP mode.

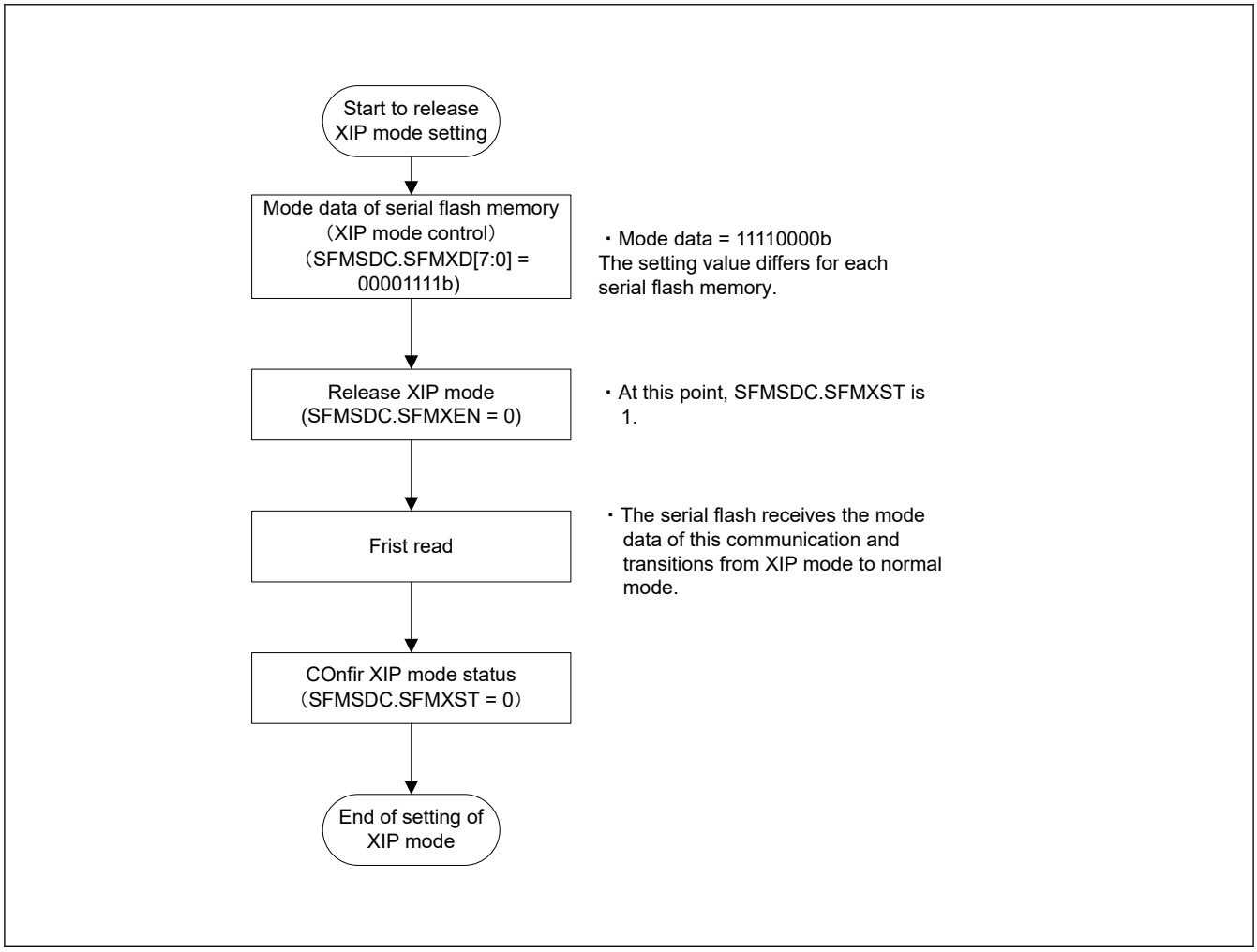

Figure 32.37 Releasing XIP mode (flowchart)

32.9 QIO2 and QIO3 Pin States

The QIO2 and QIO3 pin states depend on the serial interface read mode specified in the SFMRM[2:0] bits in the SFMSMD register.

Table 32.11 QIO2 and QIO3 pin states (1 of 2)

SFMSMD.SFMRM[2:0] bits	QIO2 pin state*1	QIO3 pin state*2	Remarks
111	Setting prohibited		
110			
101	Input or output as serial data signal (The pin is in the Hi-Z state when it is inactive.)	Input or output as serial data signal (The pin is in the Hi-Z state when it is inactive.)	Fast Read Quad I/O
100			Fast Read Quad Output

Table 32.11 QIO2 and QIO3 pin states (2 of 2)

SFMSMD.SFMRM[2:0] bits	QIO2 pin state*1	QIO3 pin state*2	Remarks
011	Output SFMWPL bit variable of the Port Control Register (SFMPMD) (initial value is low level)	Output high level	Fast Read Dual I/O
010			Fast Read Dual Output
001			Fast Read
000			Standard Read (Initial State)

Note 1. The serial flash memory can also use the QIO2 pin for the write protect (WP) function. The WP function prohibits writes to the status registers. (The function is available in mode other than Quad-SPI mode.)

Note 2. The serial flash memory can also use the QIO3 pin for the HOLD or RESET function.
The hold function places the I/O pin in an inactive state without deselecting the chip. (The function is available in mode other than Quad-SPI mode.)
The reset function resets the serial flash memory. (The function is available when the QSSL pin function is disabled or in a mode in which the QIO3 pin is not used.)

32.10 Direct Communication Mode

32.10.1 About Direct Communication

The QSPI can read the serial flash memory contents by automatically converting from reading the QSPI window area to SPI bus cycles. However, serial flash memory have many different functions in addition to memory data read, including ID information read, erase, programming, and status information read. There is no standardized instruction set for using these functions, and more functions are being added rapidly by different vendors to different devices. Therefore, to support these functions, the software can create any required SPI bus cycle by communicating directly with serial flash memory.

32.10.2 Using Direct Communication Mode

To communicate directly with serial flash memory, transition to direct communication mode by setting the DCOM bit in the Communication Mode Control Register (SFMCMD) register to 1. While direct communications mode is selected, the read operation to the serial flash memory by the QSPI window is invalid.

Note: If the QSPI is set to the XIP mode, you must terminate the XIP mode before starting direct communication mode.

32.10.3 Generating the SPI Bus Cycle during Direct Communication

The SPI bus cycle in direct communications starts on the first access to the SFMCOM register, and after a series of input / output operations are executed via the SFMCOM register, the bus cycle ends when 1 is written to the SFMCMD register. At that point, a write to the SFMCOM port is converted to a one-byte transmission to the SPI bus, and a read from the SFMCOM register is converted to a one-byte reception from the SPI bus.

During the period from the first access to the SFMCOM register to the last write operation to the SFMCMD register, the QSSL signal is held active to notify the serial flash memory that a series of SPI bus cycles is in progress.

Note: In direct communication mode, all writes to registers other than SFMCMD and SFMCOM (including SFMSMD, SFMSSC, SFMSKC, SFMSST, SFMCST, SFMSIC, SFMSAC, SFMSDC, SFMSPC, and SFMPMD) are disabled.

Figure 32.38 to Figure 32.40 show direct communication program examples, and Figure 32.41 shows ID read direct communication timing examples.

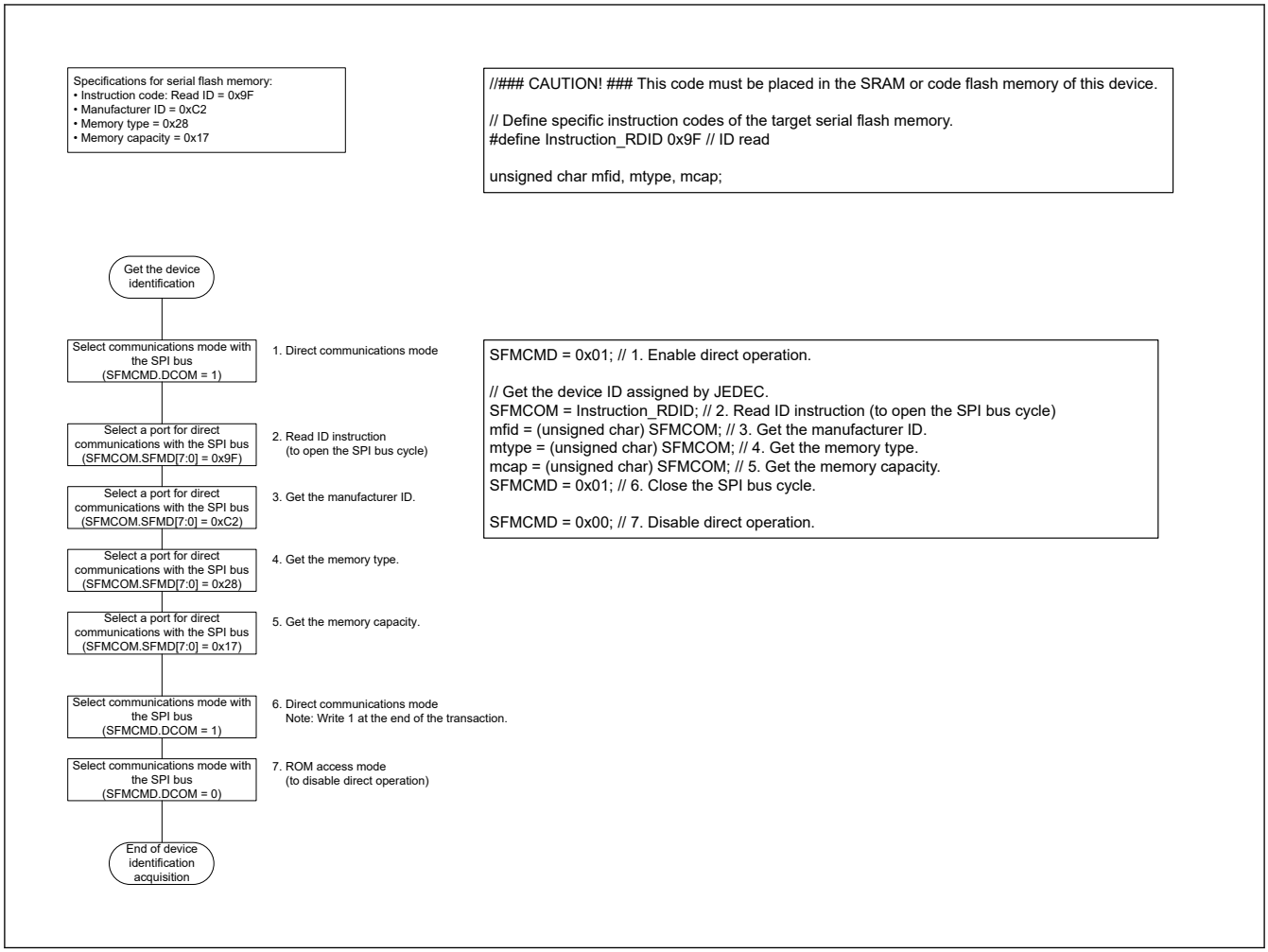

Figure 32.38 Flowchart of Device ID Acquisition

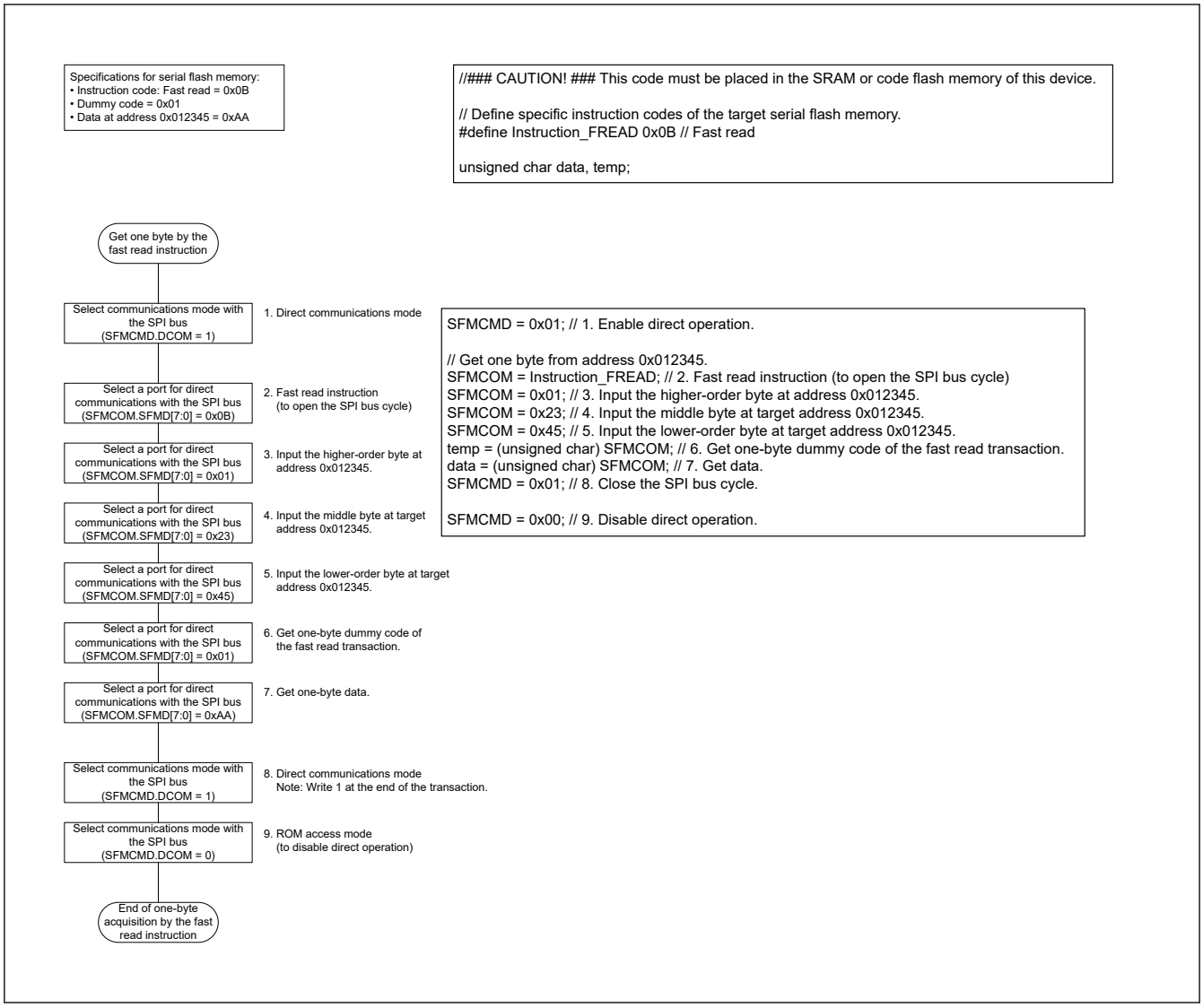

Figure 32.39 Flowchart of One-byte Acquisition by the Fast Read Instruction

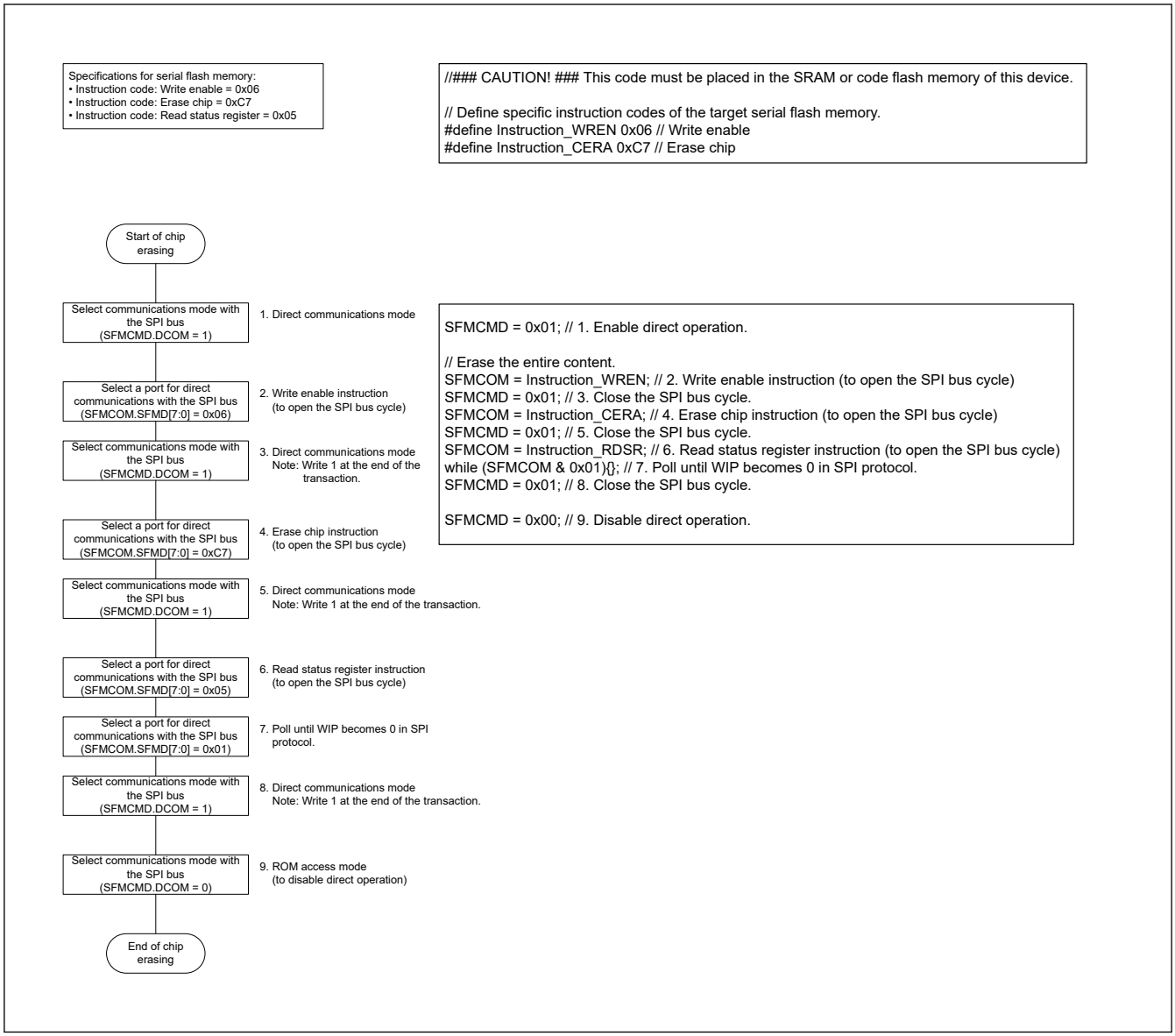

Figure 32.40 Flowchart of Chip Erasing

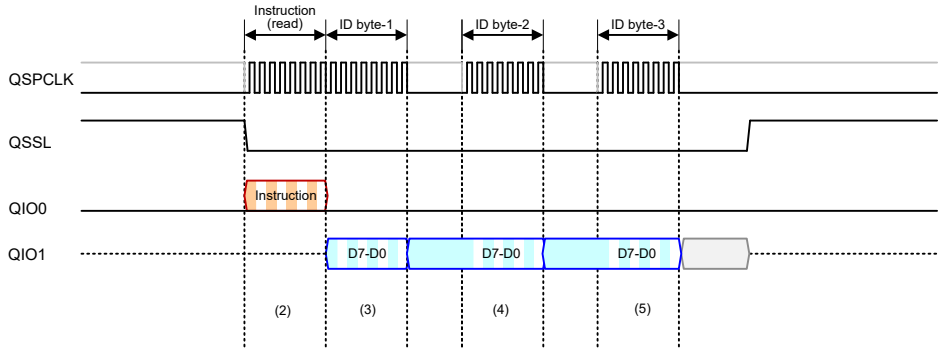

Note: (1) SFMCMD = 0x01; // Enable direct operation. Get the device ID assigned by JEDEC.
(2) SFMCOM = Instruction_RDID; // Read ID instruction (to open the transaction)
(3) mfid = (unsigned char) SFMCOM; // Get the manufacturer ID from ID byte 1.
(4) mtype = (unsigned char) SFMCOM; // Get the memory type from ID byte 2.
(5) mcap = (unsigned char) SFMCOM; // Get the memory capacity from ID byte 3.
(6) SFMCMD = 0x01; // Close the transaction.
(7) SFMCMD = 0x00; // Disable direct operation.

The timings (1), (6) and (7) for enabling or disabling direct communications mode are omitted in the figure.

Figure 32.41 Example of direct communication timing for ID read

Note: When the Single SPI Protocol, Extended SPI Protocol is used in direct communication mode, the standard Read or Fast Read instruction must be used to reference the contents of the serial flash memory. The QSPI does not support Fast Read Dual Output, Fast Read Dual I/O, Fast Read Quad Output, or Fast Read Quad I/O transfers in this configuration. When these Fast Read operations are required, use ROM access memory.

32.11 Interrupts

When ROM read access is detected in direct communication mode, the SFMCST.EROMR flag is set to 1 and QSPI generates an interrupt request. Interrupt requests are retained until the EROMR flag is cleared by a 0 write. For details, see section 12, Interrupt Controller Unit (ICU).

32.12 Usage Note

32.12.1 Settings for the Module-Stop Function

QSPI operation can be disabled or enabled using Module Stop Control Register B (MSTPCRB). The QSPI is initially stopped after reset. Releasing the module-stop state enables access to the registers. For details, see section 10, Low Power Modes.

32.12.2 Procedure for Changing Settings in Multiple Control Registers

The settings of the QSPI control registers can be modified dynamically during system operation. However, when the settings of multiple control registers are changed sequentially, an SPI bus cycle might occur before all of the registers are updated. The register setting sequence must be designed so that the SPI bus timing specifications are satisfied at all stages of register setting modification.

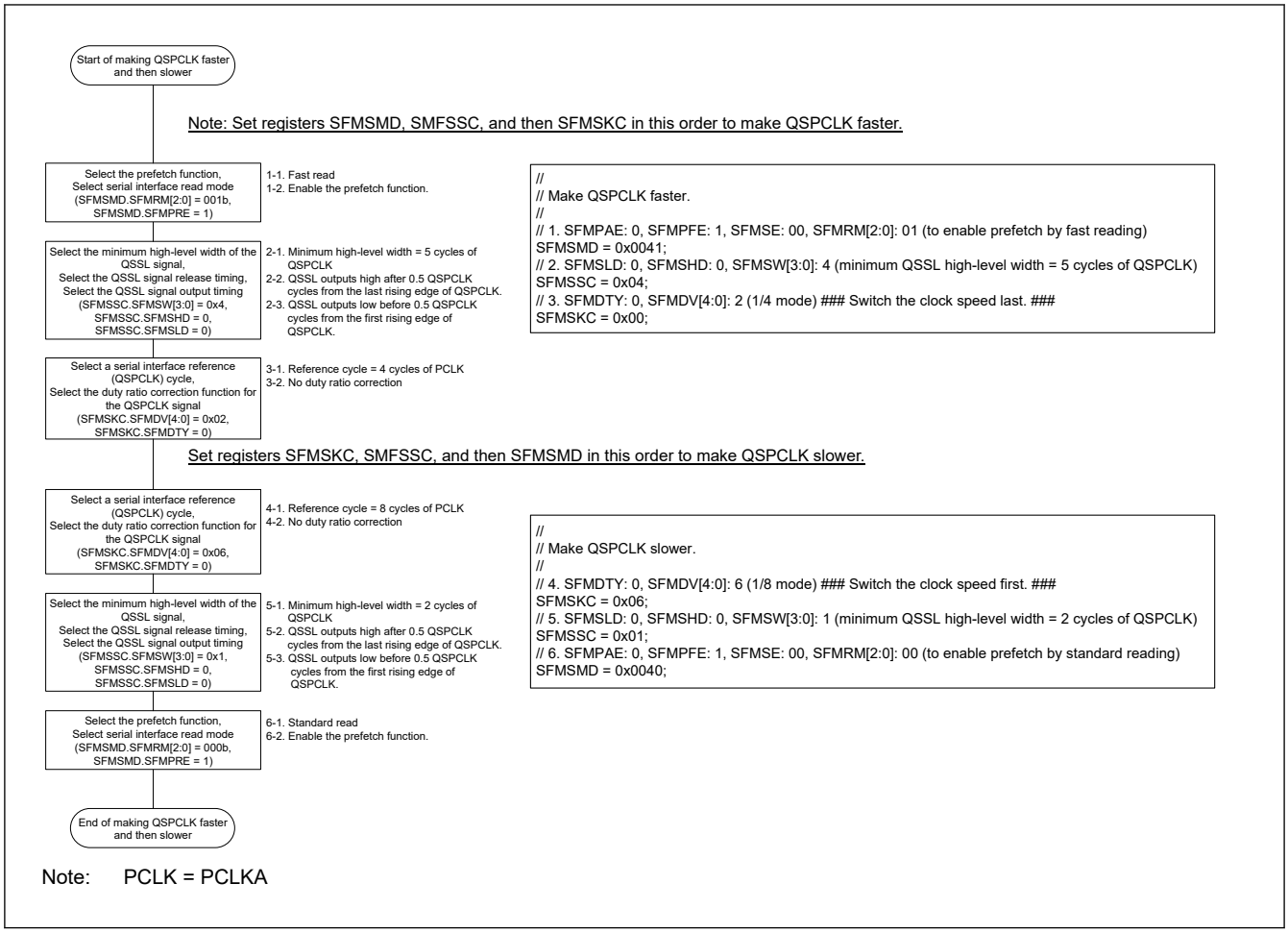

Figure 32.42 Flowchart of Making QSPCLK Faster and Slower

33. Cyclic Redundancy Check (CRC)

33.1 Overview

The Cyclic Redundancy Check (CRC) generates CRC codes to detect errors in the data. The bit order of CRC calculation results can be switched for LSB-first or MSB-first communication. Additionally, various CRC-generation polynomials are available.

Table 33.1 lists the CRC calculator specifications and Figure 33.1 shows a block diagram.

Table 33.1 CRC calculator specifications

Item	Description	
Data size	8-bit	32-bit
Data for CRC calculation*1	CRC code generated for data in 8n-bit units (where n is a natural number)	CRC code generated for data in 32n-bit units (where n is a natural number)
CRC processor unit	Operation executed on 8 bits in parallel	Operation executed on 32 bits in parallel
CRC generating polynomial	One of three generating polynomials that is selectable: [8-bit CRC] • $X^8 + X^2 + X + 1$ (CRC-8) [16-bit CRC] • $X^{16} + X^{15} + X^2 + 1$ (CRC-16) • $X^{16} + X^{12} + X^5 + 1$ (CRC-CCITT).	One of two generating polynomials that is selectable: [32-bit CRC] • $X^{32} + X^{26} + X^{23} + X^{22} + X^{16} + X^{12} + X^{11} + X^{10} + X^8 + X^7 + X^5 + X^4 + X^2 + X + 1$ (CRC-32) • $X^{32} + X^{28} + X^{27} + X^{26} + X^{25} + X^{23} + X^{22} + X^{20} + X^{19} + X^{18} + X^{14} + X^{13} + X^{11} + X^{10} + X^9 + X^8 + X^6 + 1$ (CRC-32C).
CRC calculation switching	The bit order of CRC calculation results can be switched for LSB-first or MSB-first communication	
Module-stop function	Module-stop state can be set to reduce power consumption	
TrustZone Filter	Security attribution can be set	

Note 1. This function cannot divide data used in CRC calculations. Write data in 8-bit or 32-bit units.

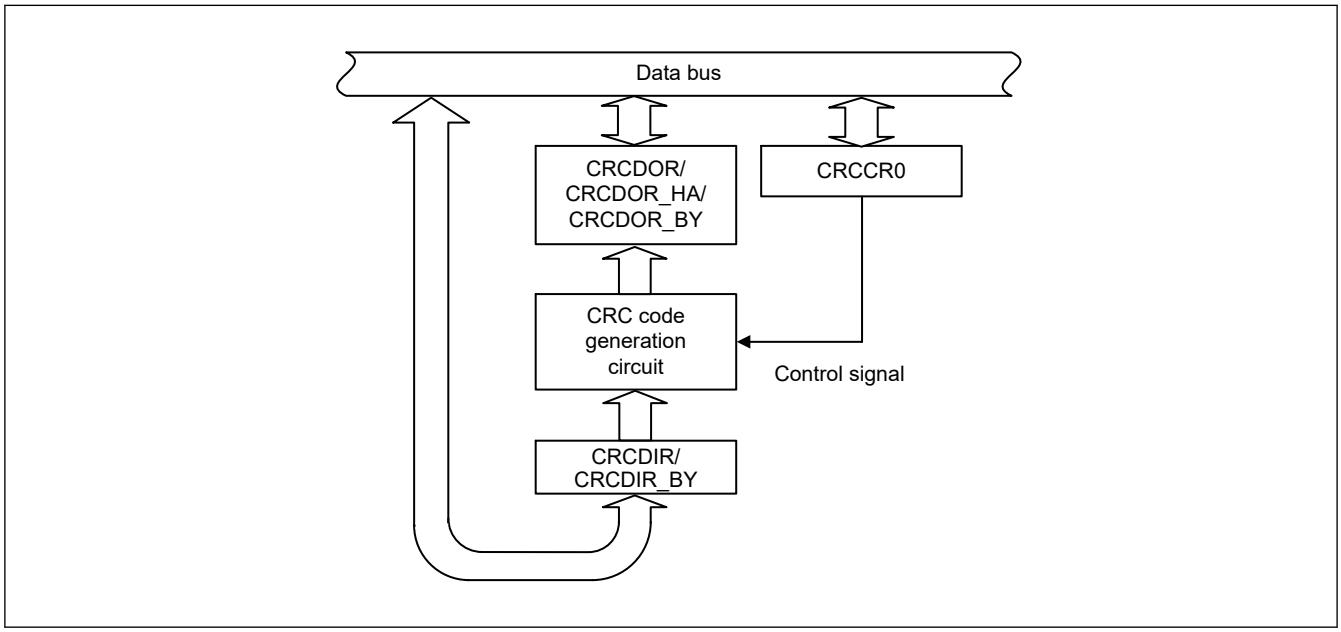

Figure 33.1 CRC calculator block diagram

33.2 Register Descriptions

33.2.1 CRCCR0 : CRC Control Register 0

Base address: CRC = 0x4010_8000

Offset address: 0x00

Bit position:	7	6	5	4	3	2	1	0
Bit field:	DORCLR	LMS	—	—	—	GPS[2:0]		
Value after reset:	0	0	0	0	0	0	0	0

Bit	Symbol	Function	R/W
2:0	GPS[2:0]	CRC Generating Polynomial Switching 0 0 1: 8-bit CRC-8 ($X^8 + X^2 + X + 1$) 0 1 0: 16-bit CRC-16 ($X^{16} + X^{15} + X^2 + 1$) 0 1 1: 16-bit CRC-CCITT ($X^{16} + X^{12} + X^5 + 1$) 1 0 0: 32-bit CRC-32 ($X^{32} + X^{26} + X^{23} + X^{22} + X^{16} + X^{12} + X^{11} + X^{10} + X^8 + X^7 + X^5 + X^4 + X^2 + X + 1$) 1 0 1: 32-bit CRC-32C ($X^{32} + X^{28} + X^{27} + X^{26} + X^{25} + X^{23} + X^{22} + X^{20} + X^{19} + X^{18} + X^{14} + X^{13} + X^{11} + X^{10} + X^9 + X^8 + X^6 + 1$) Others: No calculation is executed	R/W
5:3	—	These bits are read as 0. The write value should be 0.	R/W
6	LMS	CRC Calculation Switching 0: Generate CRC code for LSB-first communication 1: Generate CRC code for MSB-first communication	R/W
7	DORCLR	CRCDOR/CRCDOR_HA/CRCDOR_BY Register Clear 0: No effect 1: Clear the CRCDOR/CRCDOR_HA/CRCDOR_BY register	W

GPS[2:0] bits (CRC Generating Polynomial Switching)

The GPS[2:0] bits select the CRC generating polynomial.

LMS bit (CRC Calculation Switching)

The LMS bit selects the bit order of generated CRC code. Transmit the lower byte of the CRC code first for LSB-first communication and the upper byte first for MSB-first communication. For details on transmitting and receiving CRC code, see section 33.3. Operation.

DORCLR bit (CRCDOR/CRCDOR_HA/CRCDOR_BY Register Clear)

Write 1 to the DORCLR bit to set the CRCDOR/CRCDOR_HA/CRCDOR_BY register to 0x00000000. This bit is read as 0. Only 1 can be written to it.

33.2.2 CRCDIR/CRCDIR_BY : CRC Data Input Register

Base address: CRC = 0x4010_8000

Offset address: 0x04

Bit position:	31																															0
Bit field:																																
Value after reset:	0	0	0	0	0	0	0	0	0	0	0	0	0	0	0	0	0	0	0	0	0	0	0	0	0	0	0	0	0	0	0	0

Bit	Symbol	Function	R/W
31:0	n/a	CRC input data The CRCDIR register is a 32-bit read/write register to write data for CRC-32 or CRC-32C calculation. The CRCDIR_BY (CRCDIR[31:24]) is an 8-bit read/write register to write data for CRC-8, CRC-16, or CRC-CCITT calculation.	R/W

33.2.3 CRCDOR/CRCDOR_HA/CRCDOR_BY : CRC Data Output Register

Base address: CRC = 0x4010_8000

Offset address: 0x08

Bit position:	31																														0
Bit field:																															
Value after reset:	0	0	0	0	0	0	0	0	0	0	0	0	0	0	0	0	0	0	0	0	0	0	0	0	0	0	0	0	0	0	0

Bit	Symbol	Function	R/W
31:0	n/a	CRC output data The CRCDOR register is a 32-bit read/write register for CRC-32 or CRC-32C calculation. The CRCDOR_HA (CRCDOR[31:16]) register is a 16-bit read/write register for CRC-16 or CRC-CCITT calculation. The CRCDOR_BY (CRCDOR[31:24]) register is an 8-bit read/write register for CRC-8 calculation. Because its initial value is 0x00000000, rewrite the CRCDOR/CRCDOR_HA/CRCDOR_BY register to perform the calculations using a value other than the initial value. Data written to the CRCDIR/CRCDIR_BY register is CRC calculated and the result is stored in the CRCDOR/CRCDOR_HA/CRCDOR_BY register. If the CRC code is calculated following the transferred data and the result is 0x00000000, there is no CRC error.	R/W

33.3 Operation

33.3.1 Basic Operation

The CRC calculator generates CRC codes for use in LSB-first or MSB-first transfer.

The following examples show CRC code generation for input data (0xF0) using the 16-bit CRC-CCITT generating polynomial ($X^{16} + X^{12} + X^5 + 1$). In these examples, the value of the CRC Data Output Register (CRCDOR_HA) is cleared before CRC calculation.

When an 8-bit CRC (with the polynomial $X^8 + X^2 + X + 1$) is in use, the valid bits of the CRC code are obtained in CRCDOR_BY. When a 32-bit CRC is in use, the valid bits of the CRC code are obtained in CRCDOR.

Figure 33.2 and Figure 33.3 show the LSB-first and MSB-first data transmission examples respectively. Figure 33.4 and Figure 33.5 show the LSB-first and MSB-first data reception examples.

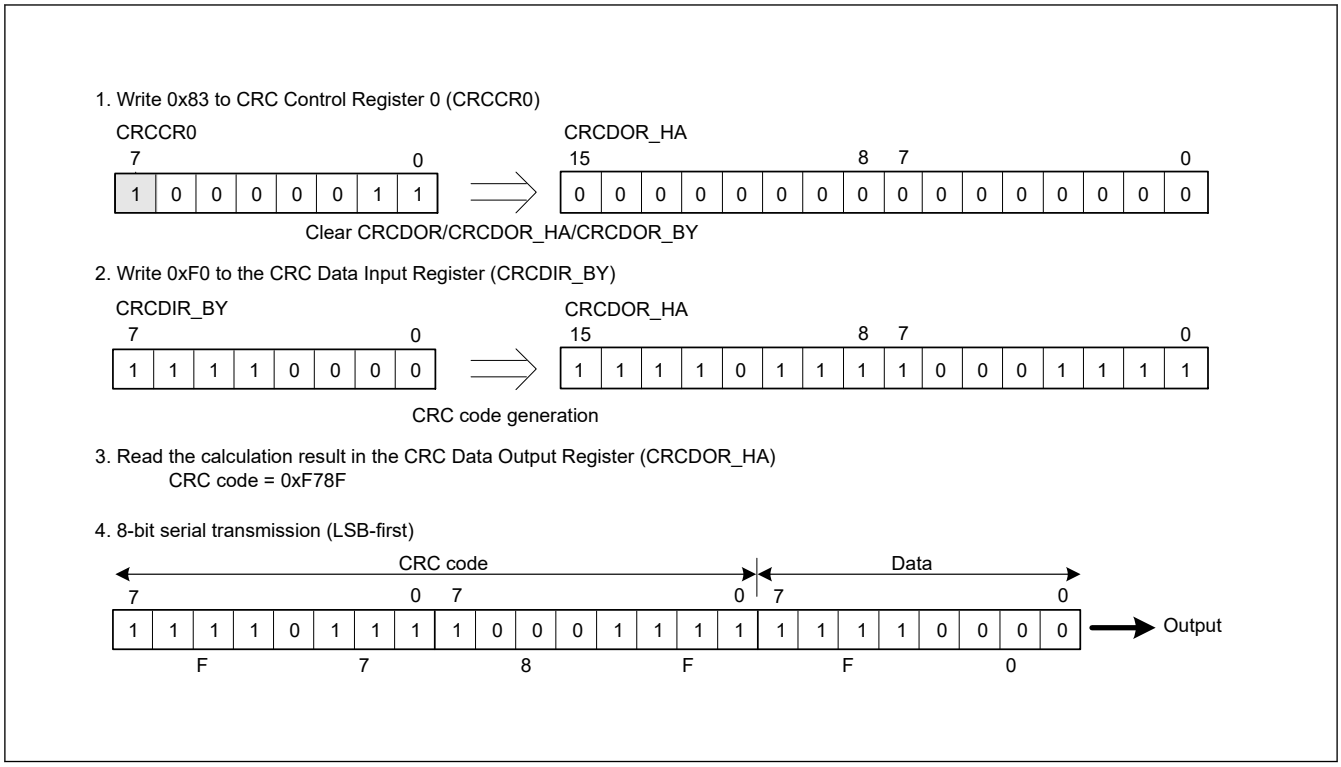

Figure 33.2 LSB-first data transmission

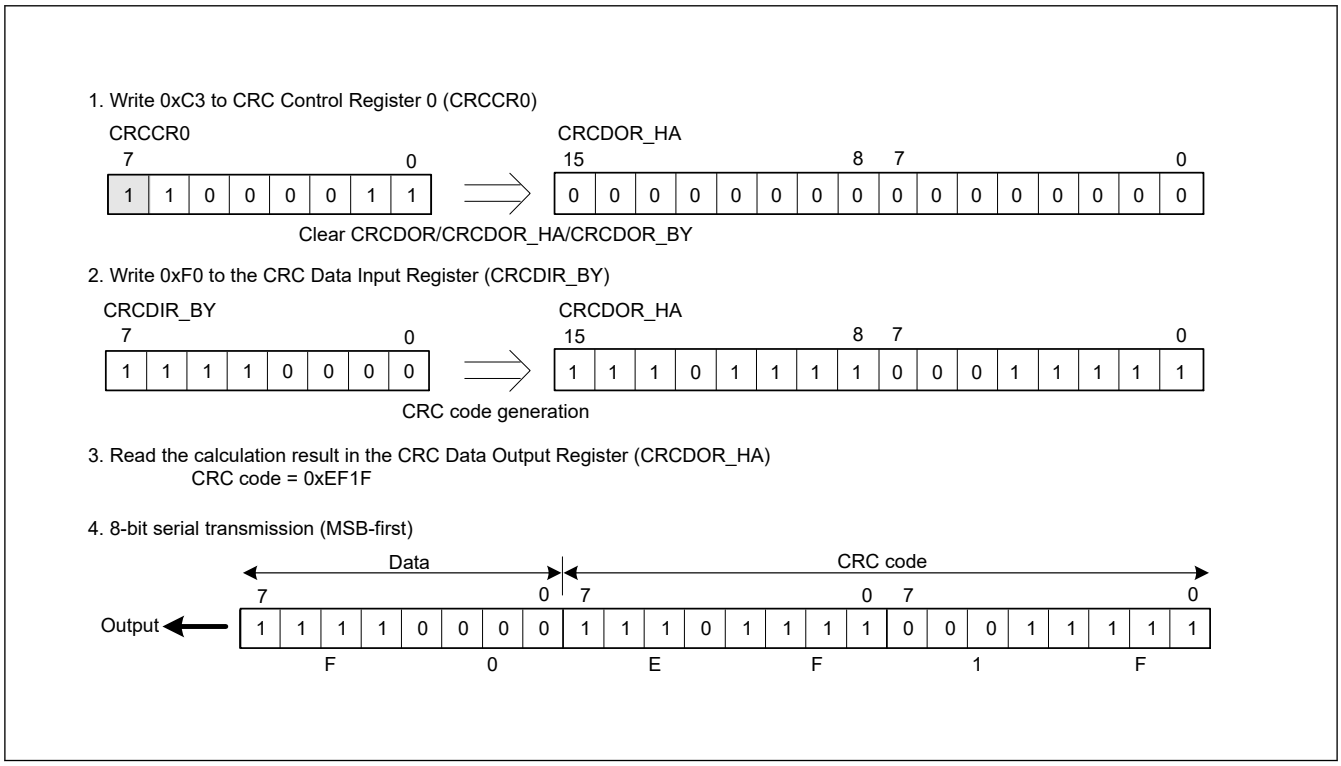

Figure 33.3 MSB-first data transmission

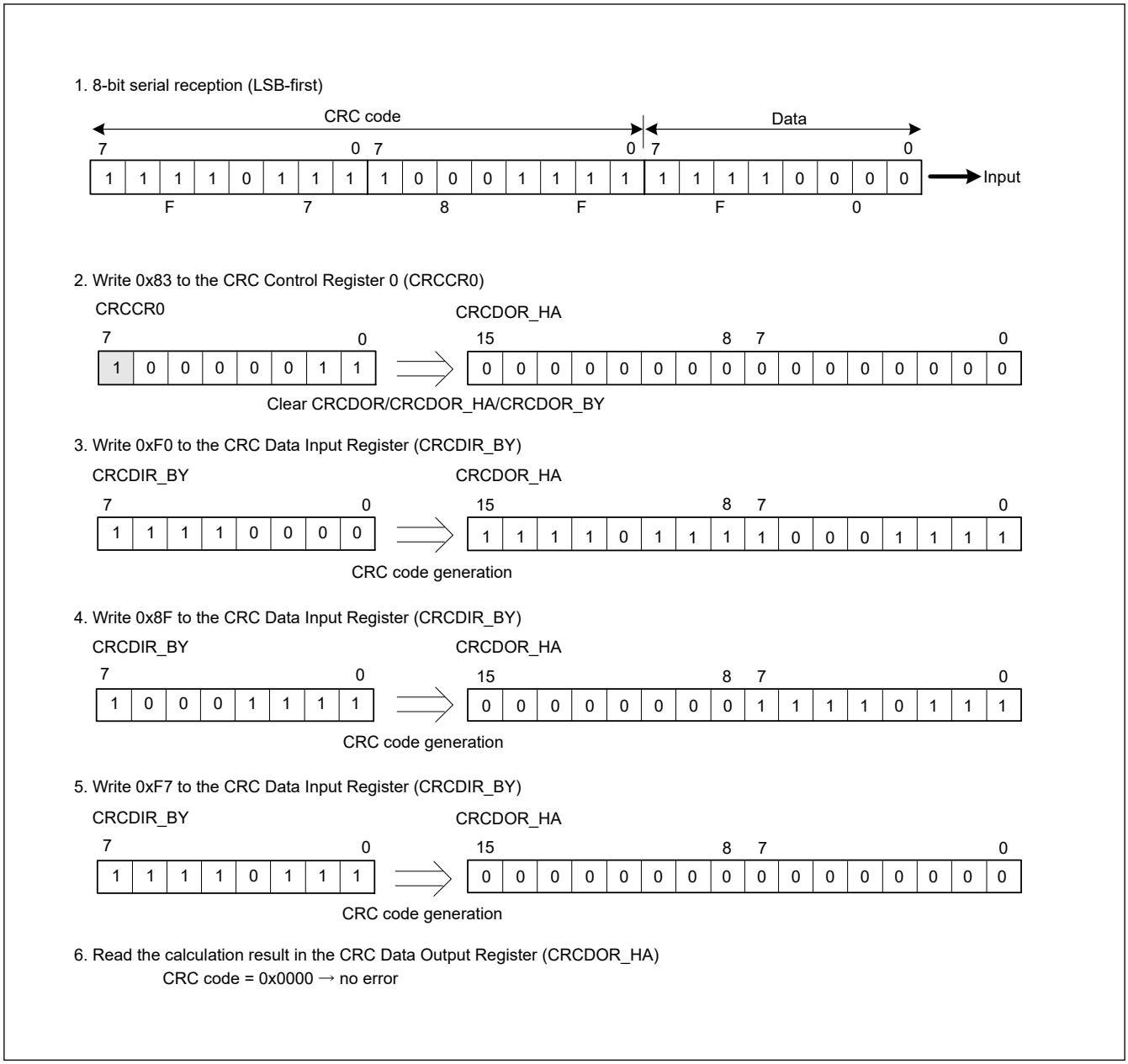

Figure 33.4 LSB-first data reception

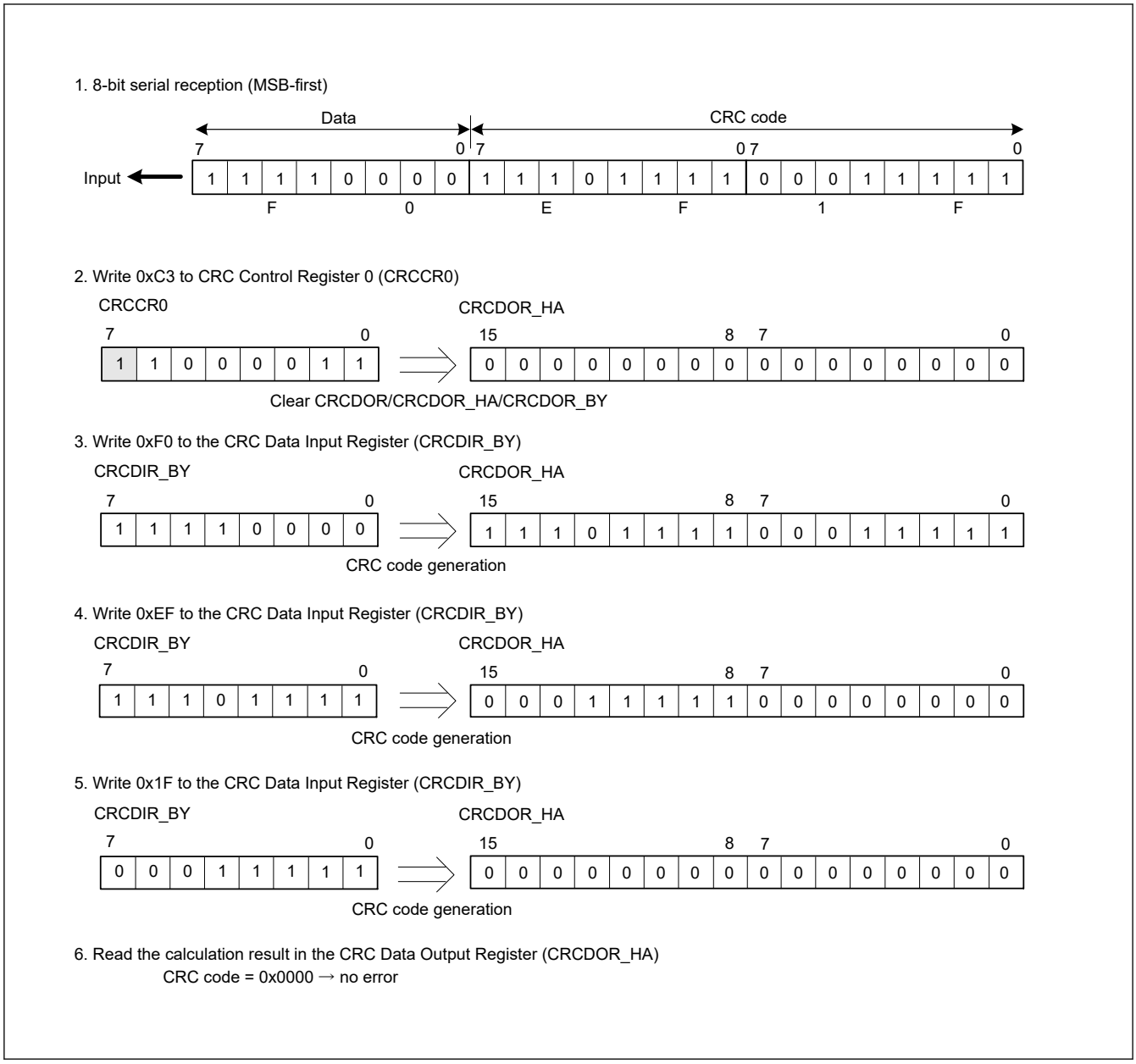

Figure 33.5 MSB-first data reception

33.4 Usage Notes

33.4.1 Settings for the Module-Stop State

The Module Stop Control Register C (MSTPCRC) can enable or disable CRC calculator operation. The CRC calculator is initially stopped after a reset. Releasing the module-stop state enables access to the registers. For details, see section 10, Low Power Modes.

33.4.2 Note on Transmission

The transmission sequence for the CRC code differs based on whether the transmission is LSB-first or MSB-first. Figure 33.6 shows an LSB-first and MSB-first data transmission.

When transmitting 32-bit data (for operation executed on 8 bits in parallel)

1. CRC code

After specifying the method for generation calculation, write data to CRCDIR in order of (1), (2), (3), and (4).

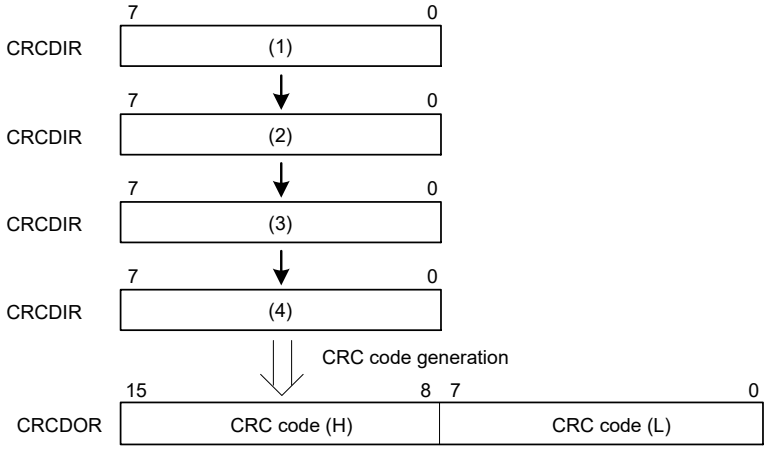

2. Transmit data

(i) When transmission is LSB-first

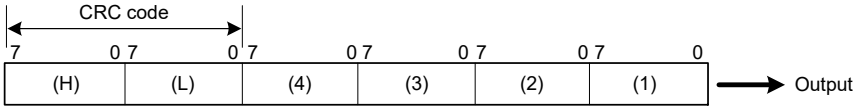

(ii) When transmission is MSB-first

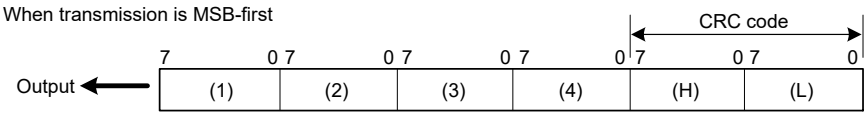

Figure 33.6 LSB-first and MSB-first data transmission

34. Renesas Secure IP (RSIP-E31A)

34.1 Overview

This security engine consists of an isolated subsystem comprising an access management circuit, storage area, encryption/decryption circuit, and random number generation circuit. In combination with the RSIP library, the security engine can prevent eavesdropping (to maintain confidentiality), falsification of information (to ensure integrity), and impersonation (to verify authenticity).

Because key information required for encryption and decryption is stored only in the security engine and all accesses from the outside can be blocked, the security engine enables building a more robust security system.

Table 34.1 lists the security engine specifications. Figure 34.1 shows the security engine block diagram.

Table 34.1 Security engine specifications (1 of 2)

Parameter	Specifications
Access control	Access management circuit ● In case of irregular access to the security engine due to a tampered program or CPU runaway, this circuit blocks all subsequent accesses and stops data output from the security engine. Interrupt RSIP_TADI is generated in response.
Symmetric cryptography	AES: Compliant with NIST FIPS PUB 197 ● Key length: 128 or 256 bits ● Data block size: 128 bits ● AES supports following block cipher mode ECB, CBC, CTR: Compliant with NIST SP 800-38A CCM: Compliant with NIST SP 800-38C GCM: Compliant with NIST SP 800-38D ● AES supports following authentication algorithm CMAC: Compliant with NIST SP 800-38B GMAC: Compliant with NIST SP 800-38D
Random number generation	128-bit true random number generation circuit
Asymmetric cryptography	ECC ● Maximum number of operable bits: 384 bits ● Support for curve – NIST P-256, P-384 – Brainpool P256r1, P384r1 – secp256k1 – Ed25519 ● Signature generation, signature verification, key generation
Message digest computation	HASH ● Block size: 512-bit (SHA-224, SHA-256) 1024-bit (SHA-512/224, SHA-512/256, SHA-384, SHA-512) ● Key size: 512-bit or less ● HASH supports following secure hash algorithms SHA-224, SHA-256, SHA-512/224, SHA-512/256, SHA-384, SHA-512: Compliant with FIPS PUB 180-4 ● HASH supports following message authentication algorithm HMAC: Compliant with FIPS PUB 198
Hardware Unique Key	● A read-only, 256-bit Hardware Unique Key (HUK) is exclusively accessible by the security engine access management circuit through a dedicated bus. ● Key derivation functions (KDFs) combine the Hardware Unique Key with the key generation information. The derived keys implement the key wrapping for user key secure storage. ● The HUK uniqueness prevents the illicit cloning and copying of keys to another MCU of the MCU group. ● The HUK itself is stored in wrapped (encrypted, non-plain) format in an isolated memory area. Therefore, it is protected from illicit access and copy.
Application Key Management	● Wrapped keys are only valid within the security engine.

Table 34.1 Security engine specifications (2 of 2)

Parameter	Specifications
Unique ID	• A read-only, 128-bit ID unique to an MCU (Unique ID) is accessible from the access management circuit. • Key derivation functions (KDFs) combine the Unique ID with the key generation information. Such derived keys are used to unwrap the HUK within the security engine boundary.
Tamper Resistance	Countermeasures available for side-channel attacks, including SPA/DPA and timing attacks.
Module-stop function	Module-stop state can be set to reduce power consumption
TrustZone Filter	Security attribution can be set

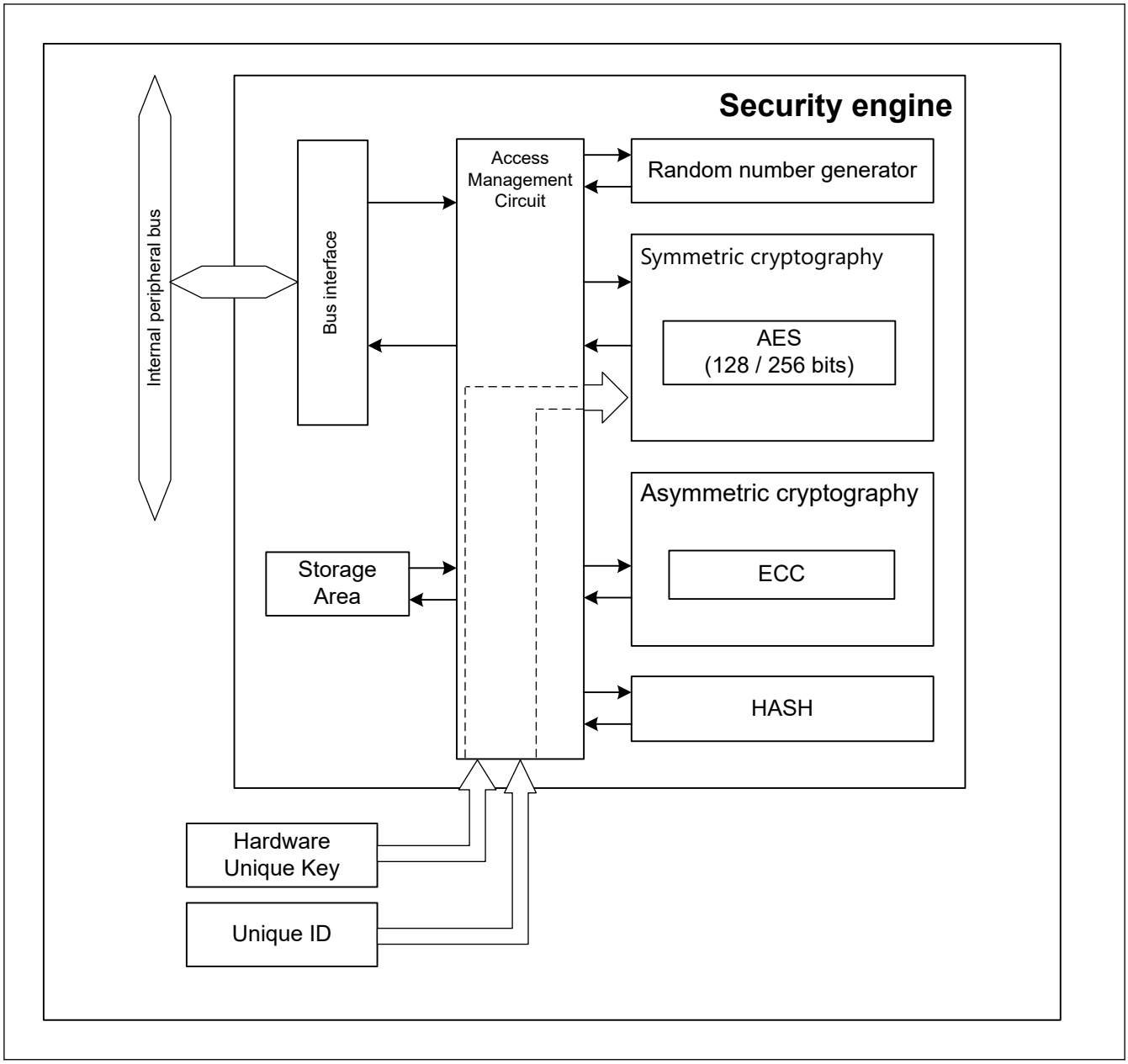

Figure 34.1 Security engine block diagram

34.2 Operation

34.2.1 Symmetric cryptography

Figure 34.2 shows conceptual block diagram of the symmetric cryptography installed in the security engine.

The symmetric cryptography uses the input key information and converts the plaintext data to ciphertext or ciphertext data to plaintext through the hardware.

The encryption/decryption process can be completed without exposing the key data and the process's intermediate data outside of the security engine. This process is performed by the encryption/decryption circuit and storage area of the security engine internally.

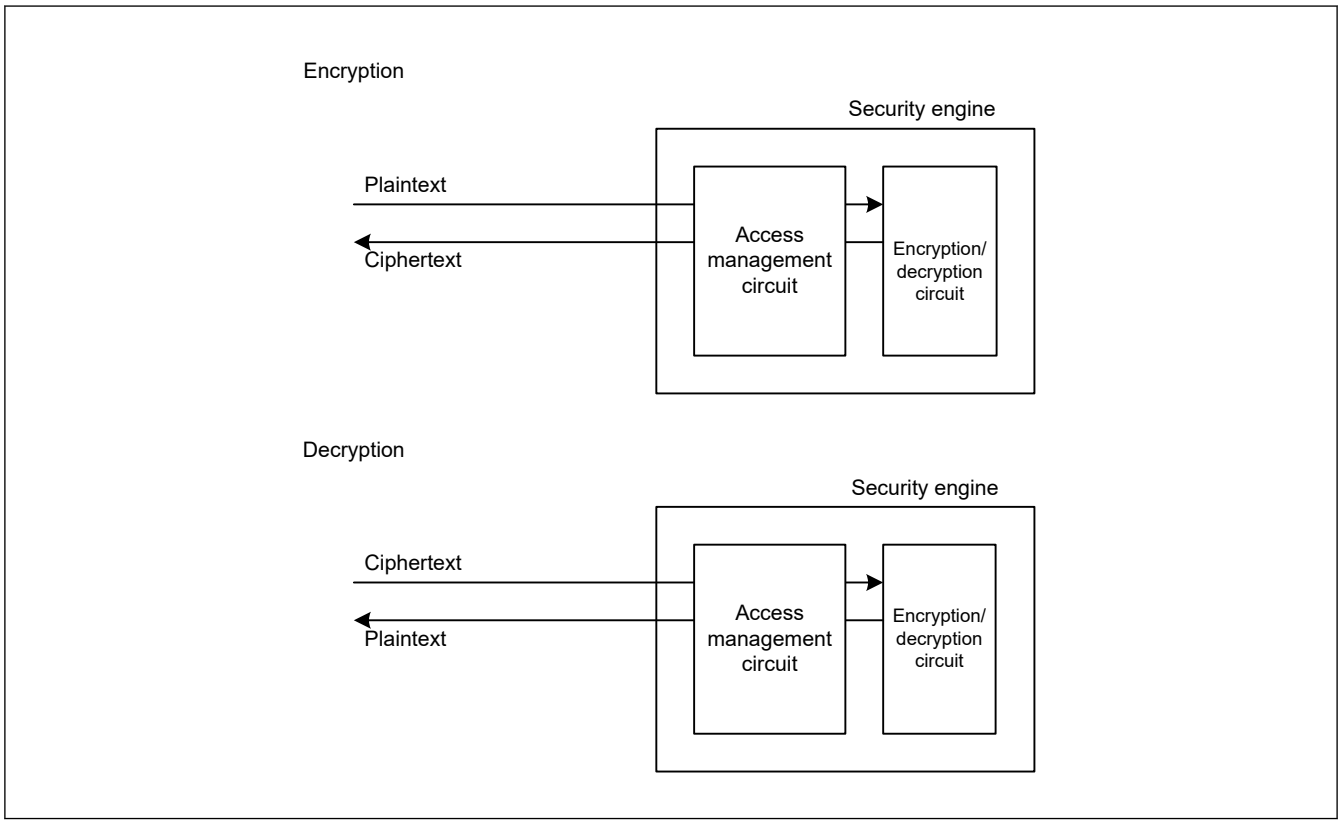

Figure 34.2 Conceptual diagram of the symmetric cryptography

34.2.2 Asymmetric Cryptography

Figure 34.3 shows conceptual block diagram of the asymmetric cryptography installed in the security engine.

The asymmetric cryptography uses the input key information and converts the plaintext data to ciphertext or ciphertext data to plaintext or generates/verifies the signature.

The encryption/decryption or signature generation/verification process can be completed without exposing the key data and the process's intermediate data outside of the security engine. This process is performed by the cryptographic circuit and storage area of the security engine internally.

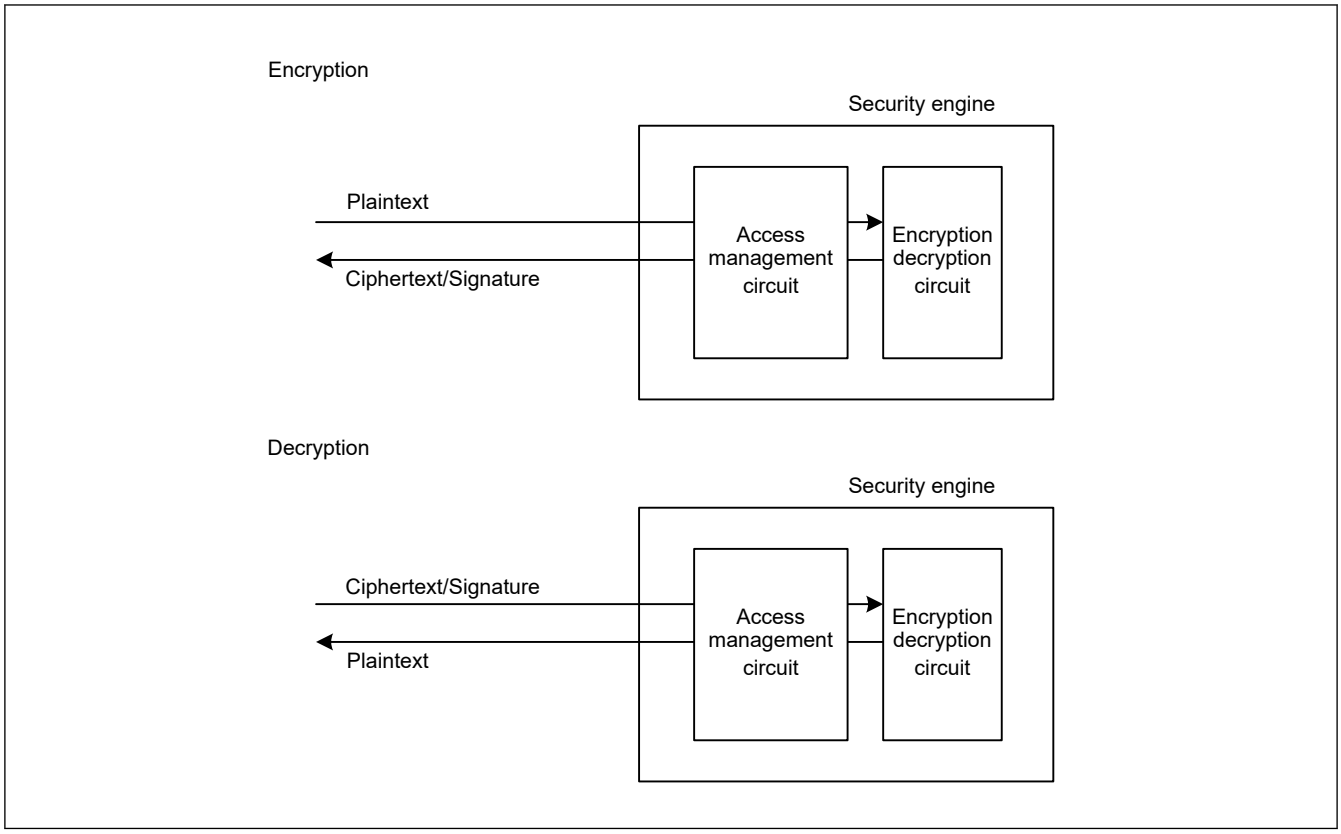

Figure 34.3 Conceptual diagram of the asymmetric cryptography

34.2.3 Hash generator

Figure 34.4 shows conceptual block diagram of the hash generator installed in the security engine.

The hash generator generates uses the input key information (if required for the hash calculation) and generates the message digest or tag.

The calculation process can be completed without exposing any key data and the process's intermediate data outside of the security engine. This process is performed by the hash circuit and storage area of the security engine internally.

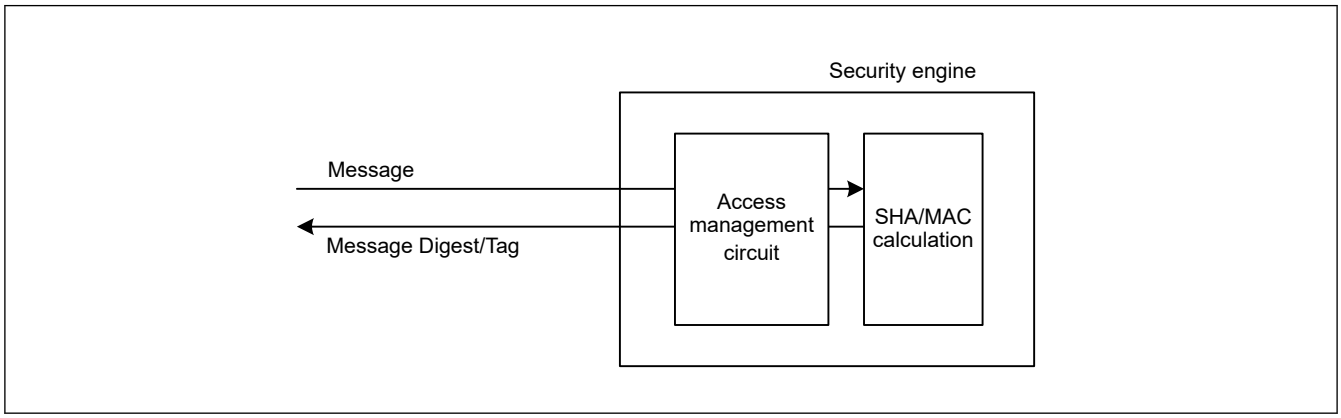

Figure 34.4 Conceptual diagram of the hash generator

34.2.4 Encryption and Decryption

Follow the procedure below to encrypt and decrypt the data:

1. Input the key information to the security engine.
2. Input the target data to the security engine. Plaintext data is converted to ciphertext and ciphertext data to plaintext.
3. Read the converted data.

The encryption/decryption circuit has input and output buffers, and can perform encryption/decryption in parallel with data input/output. Figure 34.5 shows the encryption engine timing.

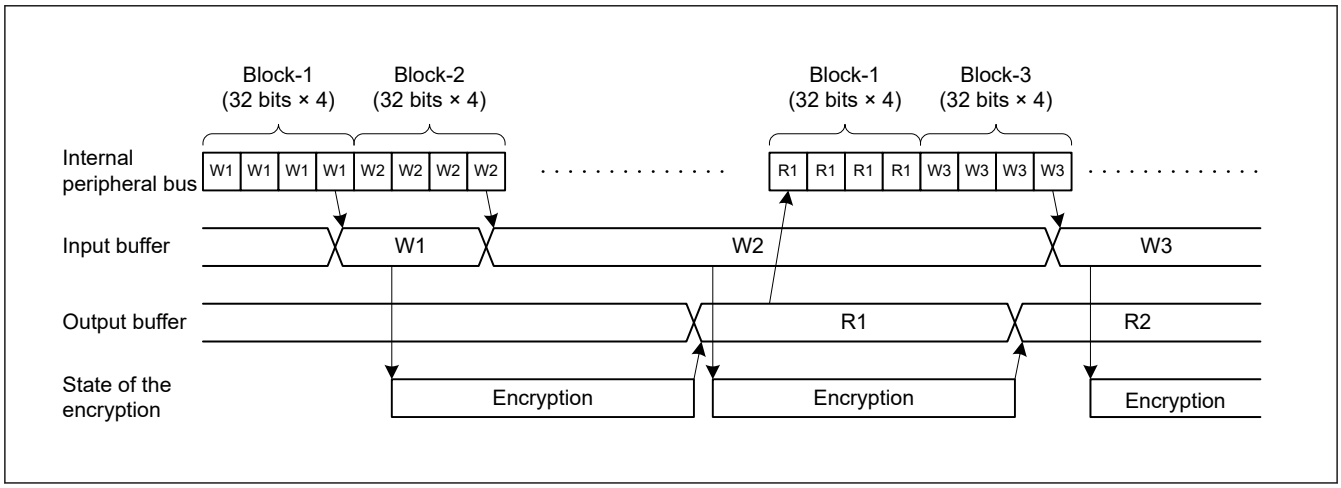

Figure 34.5 Encryption and decryption timing (AES)

34.3 Usage Notes

34.3.1 Software Standby Mode

When Software Standby mode is entered while the security engine is in process, proper processing cannot be resumed after cancelling Software Standby mode. Software Standby mode should therefore be entered while the security engine is not running.

34.3.2 Module-Stop Function Setting

The security engine operation can be disabled or enabled using Module Stop Control Register C (MSTPCRC). The security engine module is initially stopped after reset. Releasing the module-stop state enables access to the registers.

34.3.3 SPA/DPA Protections

SPA/DPA protections can optionally be enabled for encryption/decryption processing.

34.3.4 Restrictions on Open process

While open process of security engine's API (R_RSIP_Open) is running, the following restrictions is applied.

- Available CPU frequency is up to 80 MHz
- Do not change frequency of ICLK and PCLKn (n = A to D)
- Do not change MSTPCRn registers (n = A to E)
- Do not transition to Sleep mode, Software Standby mode, and Snooze mode.

35. 12-Bit A/D Converter (ADC12)

35.1 Overview

The MCU includes 12-bit successive approximation A/D converter (ADC12) unit. Up to 16 analog input channels, temperature sensor output, and internal reference voltage can be selected for conversion.

The ADC12 supports the following operating modes:

- Single scan mode to convert analog inputs of selected channels in ascending order of channel number
- Continuous scan mode to convert analog inputs of selected channels continuously in ascending order of channel number
- Group scan mode to divide analog inputs of channels into two groups (group A and B) and convert the analog inputs of selected channels for each group in ascending order of channel number

In group scan mode, select two groups (group A and B). You can individually select the scan start conditions for each group (group A, B) and start scanning of each group at different times. In addition, when group A priority control operation is set, the ADC12 accepts group A scan start during group B A/D conversion, suspending group B conversion. This allows you to assign higher priority to A/D conversion start for group A.

In double trigger mode, the analog input of a selected channel is converted in single scan mode or group scan mode (group A), and data converted by the first and second A/D conversion start triggers are stored in different registers, providing duplexing of A/D converted data.

Self-diagnosis is performed once at the beginning of each scan, and one of the three reference voltage values generated in ADC12 is A/D converted.

The temperature sensor output and the internal reference voltage cannot be selected for conversion simultaneously. Perform A/D conversion independently for the temperature sensor output or the internal reference voltage.

The ADC12 also provides a compare function (window A and window B). The compare function specifies the upper reference value for window A and lower reference value for window B, and outputs an interrupt when the A/D converted value of the selected channel meets the comparison conditions.

The reference power supply pin (VREFH0), the analog block power supply pin (AVCC0), or the internal reference voltage can select as the high-potential reference voltage. The reference power supply ground pin (VREFL0) or the analog block power supply ground pin (AVSS0) can be selected as the low-potential reference voltage. If the internal reference voltage is selected as the high-potential reference voltage, A/D conversion of the temperature sensor or internal reference voltage is prohibited.

Table 35.1 lists the ADC12 specifications and Table 35.2 list the functions. Figure 35.1 shows a block diagram of ADC12 and Table 35.3 lists the I/O pins.

Table 35.1 ADC12 specifications (1 of 3)

Parameter	Specifications
Number of units	One unit
Input channels	Up to 16 channels (AN000 to AN006, AN017 to AN025)
Extended analog function	Temperature sensor output, internal reference voltage
A/D conversion method	Successive approximation method
Resolution	12-bit
Conversion time	Normal conversion mode (ADACSR.ADSAC = 0): 0.94 μs/channel (when 12-bit A/D conversion clock PCLKC (ADCLK) operates at 48 MHz) Fast conversion mode (ADACSR.ADSAC = 1): 0.67 μs/channel (when 12-bit A/D conversion clock PCLKC (ADCLK) operates at 48 MHz)
A/D conversion clock	Peripheral module clock PCLKA and A/D conversion clock PCLKC (ADCLK) can be set with the following division ratios: PCLKA to PCLKC (ADCLK) frequency ratio = 1:1, 2:1, 4:1, 8:1, 1:2, 1:4

Table 35.1 ADC12 specifications (2 of 3)

Parameter	Specifications
Data registers*1	● 16 registers for analog input ● One register for A/D-converted data duplication in double trigger mode ● Two registers for A/D-converted data duplication during extended operation in double trigger mode ● One register for temperature sensor output ● One register for internal reference voltage ● One register for self-diagnosis ● A/D conversion results are stored in A/D data registers ● 12-bit accuracy for A/D conversion results ● A/D-converted value addition mode, in which the sum of all A/D-converted results is stored in the A/D data registers as a value with the conversion accuracy bit count + extended bits ● Double-trigger mode (selectable in single scan and group scan modes): – The first unit of A/D-converted analog input data on one selected channel is stored in the data register for the channel, and the second unit is stored in the duplication register. ● Extended operation in double trigger mode (available for specific triggers): – A/D-converted analog input data on one selected channel is stored in the duplication register provided for the associated trigger.
Operating modes*2	● Single scan mode: – A/D conversion is performed only once on the analog inputs of arbitrarily selected channels, on the temperature sensor output, and on the internal reference voltage. ● Continuous scan mode: A/D conversion is performed repeatedly on the analog inputs of the selected channels. ● Group scan mode: – Analog inputs of selected channels, the temperature sensor output, and the internal reference voltage are divided into groups A and B. Then A/D conversion of the analog inputs selected on a group basis is performed once. – The scan start conditions can be independently selected for group A, B, allowing A/D conversion of group A, B to be started independently. ● Group scan mode (when group priority operation is selected): – If a priority group trigger is input during scanning of a lower-priority group, the scanning of the lower-priority group is stopped and then scanning of the priority group is started. The order of priority is group A > group B.
Conditions for A/D conversion start	● Software trigger ● Synchronous triggers from the Event Link Controller (ELC) ● Asynchronous triggering by the external trigger pins, ADTRG0
Functions	● Variable sampling state count ● Self-diagnosis of A/D converter ● Selectable A/D-converted value addition mode or average mode ● Analog input disconnection detection function (discharge and precharge functions) ● Double-trigger mode (duplication of A/D conversion data) ● Automatic clear function for A/D data registers ● Digital comparison of values in the comparison register and data register, and comparison between values in the data registers
Interrupt sources	● In single scan mode (double trigger deselected), an A/D scan end interrupt request (ADC120_ADI) and ELC event signal (ADC120_ADI) can be generated on completion of single scan. – A compare interrupt request (ADC120_CMPAI/ADC120_CMPBI) can be generated in response to a match with a digital comparison condition. – A window compare ELC event signal (ADC120_WCMPM) can be generated in response to a match with a digital comparison condition. – A window compare ELC event signal (ADC120_WCMPUM) can be generated in response to a mismatch with a digital comparison condition. ● In single scan mode (double trigger selected), an A/D scan end interrupt request (ADC120_ADI) and ELC event signal (ADC120_ADI) is generated on completion of two scans. ● In continuous scan mode, an A/D scan end interrupt request (ADC120_ADI) and ELC event signal (ADC120_ADI) is generated on completion of all the selected channel scans. ● In group scan mode (double trigger deselected), an A/D scan end interrupt request (ADC120_ADI) and ELC event signal (ADC120_ADI) is generated on completion of group A scan, and an A/D scan end interrupt request for group B (ADC120_GBADI) can be generated on completion of group B scan. ● In group scan mode (double trigger selected), an A/D scan end interrupt request (ADC120_ADI) and ELC event signal (ADC120_ADI) is generated on completion of two group A scans, and an A/D scan end interrupt request for group B (ADC120_GBADI) can be generated on completion of group B scan. ● ADC120_ADI, ADC120_GBADI, ADC120_WCMPM, and ADC120_WCMPUM can activate the Data Transfer Controller (DTC).

Table 35.1 ADC12 specifications (3 of 3)

Parameter	Specifications
ELC interface	● An event is generated upon completion of group A scan in group-scan mode. ● An event is generated upon completion of group B scan in group-scan mode. ● An event is generated when all scans complete. ● Scan can be started by a trigger from the ELC. ● An event is generated according to conditions of the compare function window in single-scan mode.
Reference voltage	● VREFH0, AVCC0, or internal reference voltage (external reference voltage or output voltage from reference voltage generation circuit) can be selected as the analog reference voltage. ● VREFL0 or AVSS0 can be selected as the analog reference ground.
Module-stop function	Module-stop state can be set to reduce power consumption.*3
TrustZone Filter	Security attribution can be set.

Note 1. Changing the A/D conversion accuracy also changes the A/D conversion time. For details, see section 35.3.6. Analog Input Sampling and Scan Conversion Time.
Note 2. When selecting the temperature sensor output and the internal reference voltage, do not use continuous scan mode or group scan mode.
Note 3. For details, see section 10, Low Power Modes.

Table 35.2 ADC12 functions

Parameter			function
Analog input channel			AN000 to AN006, AN017 to AN025 Internal reference voltage Temperature sensor output
Conditions for A/D conversion start	Software	Software trigger	Enabled
	Asynchronous trigger (external trigger)	Trigger input pin	ADTRG0
	Synchronous trigger (trigger from ELC)	ELC trigger	ELC_AD00, ELC_AD01
Interrupt			ADC120_ADI ADC120_GBADI ADC120_CMPAI ADC120_CMPBI
Output to ELC			ADC120_ADI ADC120_WCMPM ADC120_WCMPUM
Module-stop function settings*1 *2			MSTPCRD.MSTPD16 bit

Note 1. For details, see section 10, Low Power Modes.
Note 2. Wait 1 μs or longer to start A/D conversion after release from the module-stop state.

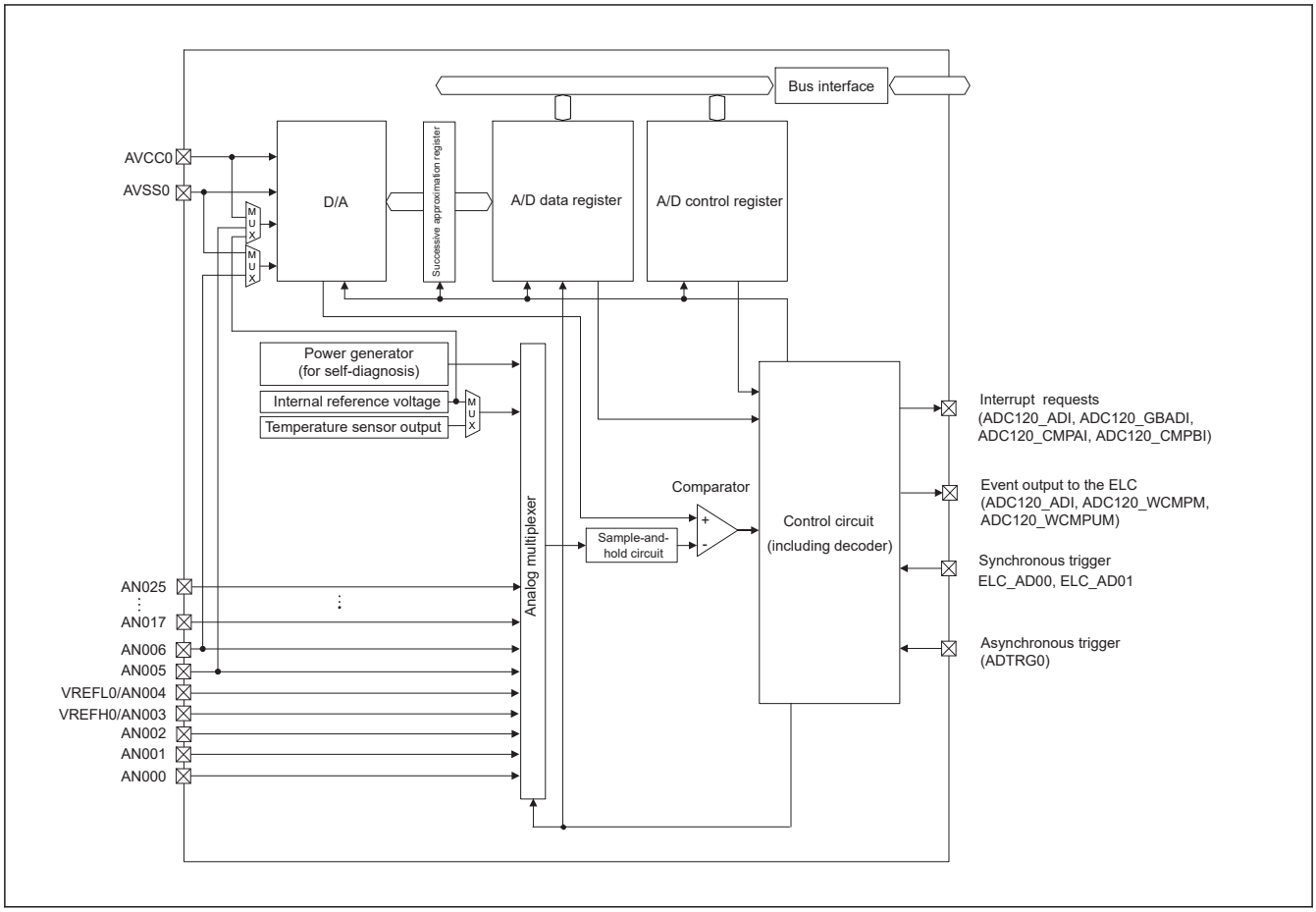

Figure 35.1 ADC12 block diagram

Table 35.3 lists the ADC12 I/O pins.

Table 35.3 ADC12 I/O pins

Pin name	I/O	Function
AVCC0	Input	Analog block power supply pin Connect to VCC when ADC12 is not used.
AVSS0	Input	Analog block power supply ground pin Connect to VSS when ADC12 is not used.
VREFH0	Input	Analog reference voltage supply pin
VREFL0	Input	Analog reference ground pin
AN000 to AN006, AN017 to AN025	Input	Analog input pins 0 to 6, 17 to 25
ADTRG0	Input	External trigger input pin for starting A/D conversion

35.2 Register Descriptions

35.2.1 ADDRn : A/D Data Registers n (n = 0 to 6, 17 to 25)

Base address: ADC120 = 0x4017_0000

Offset address: 0x020 + 0x2 × n (n = 0 to 6, 17 to 25)

Bit position:	15	14	13	12	11	10	9	8	7	6	5	4	3	2	1	0
Bit field:	ADDR [15:0]															
Value after reset:	0	0	0	0	0	0	0	0	0	0	0	0	0	0	0	0

Bit	Symbol	Function	R/W
15:0	ADDR [15:0]	Converted Value 15 to 0 Functions vary depending on the selected mode and accuracy. See Table 35.4 and Table 35.5.	R

ADDRn registers are 16-bit read-only registers to store A/D conversion results.

The following conditions determine the formats for data in the A/D data registers:

- Setting of the A/D Data Register Format Select bit (ADCER.ADRFMT) (flush-left or flush-right)
- Setting of the Addition/Average Count Select bits (ADADC.ADC[2:0]) (1, 2, 3, 4, or 16 times)
- Setting of the Average Mode Enable bit (ADADC.AVEE) (addition or average).

This section describes the data formats for these conditions in different modes.

(1) When A/D-converted value addition/average mode is not selected

Table 35.4 shows the example of bit assignment for 12-bit accuracy.

Table 35.4 Example of bit assignment for 12-bit accuracy

Accuracy	b15	b14	b13	b12	b11	b10	b9	b8	b7	b6	b5	b4	b3	b2	b1	b0
Right-justified data with 12-bit accuracy	These bits are read as 0.				Converted Value 11 to 0: 12-bit A/D-converted value											
Left-justified data with 12-bit accuracy	Converted Value 11 to 0: 12-bit A/D-converted value												These bits are read as 0.			

(2) When A/D-converted value average mode is selected

A/D-converted value average mode can be selected when 2 or 4 times is specified in the A/D-converted value addition mode. When A/D converted value average mode is selected, these registers indicate the mean of A/D-converted values on a specific channel. The value is stored in the A/D data register based on the setting of the A/D Data Register Format Select bit in the same way as for normal A/D conversion.

(3) When A/D-converted value addition mode is selected

For 12-bit accuracy, 1, 2, 3, or 4 times can be selected in the A/D-converted value addition mode. A/D conversion results are stored in the A/D data register as a 2-bit-extended value of the specified conversion accuracy.

For 12-bit accuracy, 16 times can also be selected in the A/D-converted value addition mode. In A/D-converted value addition mode, these registers indicate the value that is obtained by adding A/D-converted values on a specific channel. A/D conversion results are stored in the A/D data register as a 4-bit-extended value of the specified conversion accuracy.

When A/D-converted value addition mode is selected, the value is stored in the A/D data register based on the settings of the A/D Data Register Format Select bits.

Table 35.5 shows example of the bit assignment for 12-bit accuracy.

Table 35.5 Example of bit assignment for 12-bit accuracy when A/D-converted value addition mode is selected (1 of 2)

Accuracy		b15	b14	b13	b12	b11	b10	b9	b8	b7	b6	b5	b4	b3	b2	b1	b0
Right-justified data with 12-bit accuracy	When 16 conversion times is specified	Added Value 15 to 0: 16-bit sum of A/D conversion results															
	When 1, 2, 3, or 4 conversion times is specified	These bits are read as 0.	Added Value 13 to 0: 14-bit sum of A/D conversion results														

Table 35.5 Example of bit assignment for 12-bit accuracy when A/D-converted value addition mode is selected (2 of 2)

Accuracy		b15	b14	b13	b12	b11	b10	b9	b8	b7	b6	b5	b4	b3	b2	b1	b0
Left-justified data with 12-bit accuracy	When 16 conversion times is specified	Added Value 15 to 0: 16-bit sum of A/D conversion results															
	When 1, 2, 3, or 4 conversion times is specified	Added Value 13 to 0: 14-bit sum of A/D conversion results														These bits are read as 0.	

35.2.2 ADDBLDR : A/D Data Duplexing Register

Base address: ADC120 = 0x4017_0000

Offset address: 0x018

Bit position:	15	14	13	12	11	10	9	8	7	6	5	4	3	2	1	0
Bit field:	ADDBLDR [15:0]															
Value after reset:	0	0	0	0	0	0	0	0	0	0	0	0	0	0	0	0

Bit	Symbol	Function	R/W
15:0	ADDBLDR [15:0]	Converted Value 15 to 0 Functions vary depending on the selected mode and accuracy. See Table 35.6 and Table 35.7.	R

ADDBLDR register is a 16-bit read-only register to store A/D conversion results in response to a second trigger in double-trigger mode.

The following conditions determine the formats for data in the A/D data registers:

- Setting of the A/D Data Register Format Select bit (ADCER.ADRFMT) (flush-left or flush-right)
- Setting of the Addition/Average Count Select bits (ADADC.ADC[2:0]) (1, 2, 3, 4, or 16 times)
- Setting of the Average Mode Enable bit (ADADC.AVEE) (addition or average).

This section describes the data formats for these conditions in different modes.

(1) When A/D-converted value addition/average mode is not selected

Table 35.6 shows the example of bit assignment for 12-bit accuracy.

Table 35.6 Example of bit assignment for 12-bit accuracy

Accuracy	b15	b14	b13	b12	b11	b10	b9	b8	b7	b6	b5	b4	b3	b2	b1	b0
Right-justified data with 12-bit accuracy	These bits are read as 0.				Converted Value 11 to 0: 12-bit A/D-converted value											
Left-justified data with 12-bit accuracy	Converted Value 11 to 0: 12-bit A/D-converted value												These bits are read as 0.			

(2) When A/D-converted value average mode is selected

A/D-converted value average mode can be selected when 2 or 4 times is specified in the A/D-converted value addition mode. When A/D converted value average mode is selected, this register indicates the mean of A/D-converted values on a specific channel. The value is stored in the A/D data register based on the setting of the A/D Data Register Format Select bit in the same way as for normal A/D conversion.

(3) When A/D-converted value addition mode is selected

For 12-bit accuracy, 1, 2, 3, or 4 times can be selected in the A/D-converted value addition mode. A/D conversion results are stored in the A/D data register as a 2-bit-extended value of the specified conversion accuracy.

For 12-bit accuracy, 16 times can also be selected in the A/D-converted value addition mode. In A/D-converted value addition mode, this register indicates the value that is obtained by adding A/D-converted values on a specific channel. A/D conversion results are stored in the A/D data register as a 4-bit-extended value of the specified conversion accuracy.

When A/D-converted value addition mode is selected, the value is stored in the A/D data register based on the settings of the A/D Data Register Format Select bits.

Table 35.7 shows example of the bit assignment for 12-bit accuracy.

Table 35.7 Example of bit assignment for 12-bit accuracy when A/D-converted value addition mode is selected

Accuracy		b15	b14	b13	b12	b11	b10	b9	b8	b7	b6	b5	b4	b3	b2	b1	b0
Right-justified data with 12-bit accuracy	When 16 conversion times is specified	Added Value 15 to 0: 16-bit sum of A/D conversion results															
	When 1, 2, 3, or 4 conversion times is specified	These bits are read as 0.		Added Value 13 to 0: 14-bit sum of A/D conversion results													
Left-justified data with 12-bit accuracy	When 16 conversion times is specified	Added Value 15 to 0: 16-bit sum of A/D conversion results															
	When 1, 2, 3, or 4 conversion times is specified	Added Value 13 to 0: 14-bit sum of A/D conversion results														These bits are read as 0.	

35.2.3 ADDBLDRn : A/D Data Duplexing Register n (n = A, B)

Base address: ADC120 = 0x4017_0000

Offset address: 0x084 (n = A)
0x086 (n = B)

Bit position:	15	14	13	12	11	10	9	8	7	6	5	4	3	2	1	0
Bit field:	ADDBLDR [15:0]															
Value after reset:	0	0	0	0	0	0	0	0	0	0	0	0	0	0	0	0

Bit	Symbol	Function	R/W
15:0	ADDBLDR [15:0]	Converted Value 15 to 0 Functions vary depending on the selected mode and accuracy. See Table 35.8 and Table 35.9.	R

ADDBLDRn registers are 16-bit read-only registers to store A/D conversion results in response to respective triggers during extended operation in double-trigger mode.

The following conditions determine the formats for data in the A/D data registers:

- Setting of the A/D Data Register Format Select bit (ADCER.ADRFMT) (flush-left or flush-right)
- Setting of the Addition/Average Count Select bits (ADADC.ADC[2:0]) (1, 2, 3, 4, or 16 times)
- Setting of the Average Mode Enable bit (ADADC.AVEE) (addition or average).

This section describes the data formats for these conditions in different modes.

(1) When A/D-converted value addition/average mode is not selected

Table 35.8 shows the example of bit assignment for 12-bit accuracy.

Table 35.8 Example of bit assignment for 12-bit accuracy

Accuracy	b15	b14	b13	b12	b11	b10	b9	b8	b7	b6	b5	b4	b3	b2	b1	b0
Right-justified data with 12-bit accuracy	These bits are read as 0.				Converted Value 11 to 0: 12-bit A/D-converted value											
Left-justified data with 12-bit accuracy	Converted Value 11 to 0: 12-bit A/D-converted value												These bits are read as 0.			

(2) When A/D-converted value average mode is selected

A/D-converted value average mode can be selected when 2 or 4 times is specified in the A/D-converted value addition mode. When A/D converted value average mode is selected, these registers indicate the mean of A/D-converted values on a specific channel. The value is stored in the A/D data register based on the setting of the A/D Data Register Format Select bit in the same way as for normal A/D conversion.

(3) When A/D-converted value addition mode is selected

For 12-bit accuracy, 1, 2, 3, or 4 times can be selected in the A/D-converted value addition mode. A/D conversion results are stored in the A/D data register as a 2-bit-extended value of the specified conversion accuracy.

For 12-bit accuracy, 16 times can also be selected in the A/D-converted value addition mode. In A/D-converted value addition mode, these registers indicate the value that is obtained by adding A/D-converted values on a specific channel. A/D conversion results are stored in the A/D data register as a 4-bit-extended value of the specified conversion accuracy.

When A/D-converted value addition mode is selected, the value is stored in the A/D data register based on the settings of the A/D Data Register Format Select bits.

Table 35.9 shows example of the bit assignment for 12-bit accuracy.

Table 35.9 Example of bit assignment for 12-bit accuracy when A/D-converted value addition mode is selected

Accuracy		b15	b14	b13	b12	b11	b10	b9	b8	b7	b6	b5	b4	b3	b2	b1	b0
Right-justified data with 12-bit accuracy	When 16 conversion times is specified	Added Value 15 to 0: 16-bit sum of A/D conversion results															
	When 1, 2, 3, or 4 conversion times is specified	These bits are read as 0.		Added Value 13 to 0: 14-bit sum of A/D conversion results													
Left-justified data with 12-bit accuracy	When 16 conversion times is specified	Added Value 15 to 0: 16-bit sum of A/D conversion results															
	When 1, 2, 3, or 4 conversion times is specified	Added Value 13 to 0: 14-bit sum of A/D conversion results														These bits are read as 0.	

35.2.4 ADTSDR : A/D Temperature Sensor Data Register

Base address: ADC120 = 0x4017_0000

Offset address: 0x01A

Bit position:	15	14	13	12	11	10	9	8	7	6	5	4	3	2	1	0
Bit field:	ADTSDR [15:0]															
Value after reset:	0	0	0	0	0	0	0	0	0	0	0	0	0	0	0	0

Bit	Symbol	Function	R/W
15:0	ADTSDR [15:0]	Converted Value 15 to 0 Functions vary depending on the selected mode and accuracy. See Table 35.10 and Table 35.11.	R

ADTSDR register is a 16-bit read-only register to store A/D conversion result of the temperature sensor output.

The following conditions determine the formats for data in the A/D data registers:

- Setting of the A/D Data Register Format Select bit (ADCER.ADRFMT) (flush-left or flush-right)
- Setting of the Addition/Average Count Select bits (ADADC.ADC[2:0]) (1, 2, 3, 4, or 16 times)
- Setting of the Average Mode Enable bit (ADADC.AVEE) (addition or average).

This section describes the data formats for these conditions in different modes.

(1) When A/D-converted value addition/average mode is not selected

Table 35.10 shows the example of bit assignment for 12-bit accuracy.

Table 35.10 Example of bit assignment for 12-bit accuracy

Accuracy	b15	b14	b13	b12	b11	b10	b9	b8	b7	b6	b5	b4	b3	b2	b1	b0
Right-justified data with 12-bit accuracy	These bits are read as 0.				Converted Value 11 to 0: 12-bit A/D-converted value											
Left-justified data with 12-bit accuracy	Converted Value 11 to 0: 12-bit A/D-converted value												These bits are read as 0.			

(2) When A/D-converted value average mode is selected

A/D-converted value average mode can be selected when 2 or 4 times is specified in the A/D-converted value addition mode. When A/D converted value average mode is selected, this register indicates the mean of A/D-converted values on a specific channel. The value is stored in the A/D data register based on the setting of the A/D Data Register Format Select bit in the same way as for normal A/D conversion.

(3) When A/D-converted value addition mode is selected

For 12-bit accuracy, 1, 2, 3, or 4 times can be selected in the A/D-converted value addition mode. A/D conversion results are stored in the A/D data register as a 2-bit-extended value of the specified conversion accuracy.

For 12-bit accuracy, 16 times can also be selected in the A/D-converted value addition mode. In A/D-converted value addition mode, this register indicates the value that is obtained by adding A/D-converted values on a specific channel. A/D conversion results are stored in the A/D data register as a 4-bit-extended value of the specified conversion accuracy.

When A/D-converted value addition mode is selected, the value is stored in the A/D data register based on the settings of the A/D Data Register Format Select bits.

Table 35.11 shows example of the bit assignment for 12-bit accuracy.

Table 35.11 Example of bit assignment for 12-bit accuracy when A/D-converted value addition mode is selected

Accuracy		b15	b14	b13	b12	b11	b10	b9	b8	b7	b6	b5	b4	b3	b2	b1	b0
Right-justified data with 12-bit accuracy	When 16 conversion times is specified	Added Value 15 to 0: 16-bit sum of A/D conversion results															
	When 1, 2, 3, or 4 conversion times is specified	These bits are read as 0.		Added Value 13 to 0: 14-bit sum of A/D conversion results													
Left-justified data with 12-bit accuracy	When 16 conversion times is specified	Added Value 15 to 0: 16-bit sum of A/D conversion results															
	When 1, 2, 3, or 4 conversion times is specified	Added Value 13 to 0: 14-bit sum of A/D conversion results														These bits are read as 0.	

35.2.5 ADOCDR : A/D Internal Reference Voltage Data Register

Base address: ADC120 = 0x4017_0000

Offset address: 0x01C

Bit position:	15	14	13	12	11	10	9	8	7	6	5	4	3	2	1	0
Bit field:	ADOCDR [15:0]															
Value after reset:	0	0	0	0	0	0	0	0	0	0	0	0	0	0	0	0

Bit	Symbol	Function	R/W
15:0	ADOCDR [15:0]	Converted Value 15 to 0 Functions vary depending on the selected mode and accuracy. See Table 35.12 and Table 35.13.	R

ADOCDR register is a 16-bit read-only register to store A/D conversion result of the internal reference voltage.

The following conditions determine the formats for data in the A/D data registers:

- Setting of the A/D Data Register Format Select bit (ADCER.ADRFMT) (flush-left or flush-right)
- Setting of the Addition/Average Count Select bits (ADADC.ADC[2:0]) (1, 2, 3, 4, or 16 times)
- Setting of the Average Mode Enable bit (ADADC.AVEE) (addition or average).

This section describes the data formats for these conditions in different modes.

(1) When A/D-converted value addition/average mode is not selected

Table 35.12 shows the example of bit assignment for 12-bit accuracy.

Table 35.12 Example of bit assignment for 12-bit accuracy

Accuracy	b15	b14	b13	b12	b11	b10	b9	b8	b7	b6	b5	b4	b3	b2	b1	b0
Right-justified data with 12-bit accuracy	These bits are read as 0.				Converted Value 11 to 0: 12-bit A/D-converted value											
Left-justified data with 12-bit accuracy	Converted Value 11 to 0: 12-bit A/D-converted value												These bits are read as 0.			

(2) When A/D-converted value average mode is selected

A/D-converted value average mode can be selected when 2 or 4 times is specified in the A/D-converted value addition mode. When A/D converted value average mode is selected, this register indicates the mean of A/D-converted values on a specific channel. The value is stored in the A/D data register based on the setting of the A/D Data Register Format Select bit in the same way as for normal A/D conversion.

(3) When A/D-converted value addition mode is selected

For 12-bit accuracy, 1, 2, 3, or 4 times can be selected in the A/D-converted value addition mode. A/D conversion results are stored in the A/D data register as a 2-bit-extended value of the specified conversion accuracy.

For 12-bit accuracy, 16 times can also be selected in the A/D-converted value addition mode. In A/D-converted value addition mode, this register indicates the value that is obtained by adding A/D-converted values on a specific channel. A/D conversion results are stored in the A/D data register as a 4-bit-extended value of the specified conversion accuracy.

When A/D-converted value addition mode is selected, the value is stored in the A/D data register based on the settings of the A/D Data Register Format Select bits.

Table 35.13 shows example of the bit assignment for 12-bit accuracy.

Table 35.13 Example of bit assignment for 12-bit accuracy when A/D-converted value addition mode is selected

Accuracy		b15	b14	b13	b12	b11	b10	b9	b8	b7	b6	b5	b4	b3	b2	b1	b0
Right-justified data with 12-bit accuracy	When 16 conversion times is specified	Added Value 15 to 0: 16-bit sum of A/D conversion results															
	When 1, 2, 3, or 4 conversion times is specified	These bits are read as 0.		Added Value 13 to 0: 14-bit sum of A/D conversion results													
Left-justified data with 12-bit accuracy	When 16 conversion times is specified	Added Value 15 to 0: 16-bit sum of A/D conversion results															
	When 1, 2, 3, or 4 conversion times is specified	Added Value 13 to 0: 14-bit sum of A/D conversion results														These bits are read as 0.	

35.2.6 ADRD : A/D Self-Diagnosis Data Register

Base address: ADC120 = 0x4017_0000

Offset address: 0x01E

Bit position:	15	14	13	12	11	10	9	8	7	6	5	4	3	2	1	0
Bit field:	DIAGST[1:0]		—	—	AD[11:0]											
Value after reset:	0	0	0	0	0	0	0	0	0	0	0	0	0	0	0	0

Bit	Symbol	Function	R/W
11:0	AD[11:0]	Converted Value 11 to 0 12-bit A/D-converted value	R
13:12	—	These bits are read as 0.	R
15:14	DIAGST[1:0]	Self-Diagnosis Status For details on self-diagnosis, see section 35.2.15. ADCER : A/D Control Extended Register. 0 0: Self-diagnosis not executed after power-on. 0 1: Self-diagnosis was executed using the 0 V voltage. 1 0: Self-diagnosis was executed using the reference voltage*1 × 1/2. 1 1: Self-diagnosis was executed using the reference voltage *1.	R

Note: The example of the bit assignment for the right-justified data with 12-bit accuracy is indicated.
Note 1. The reference voltage refers to VREFH0, AVCC0, or internal reference voltage by ADHVREFCNT setting.

ADRD is a 16-bit read-only register that holds the A/D conversion results based on the self-diagnosis of the ADC12. In addition to the AD[11:0] bits indicating the A/D-converted value, it includes the Self-Diagnosis Status bit (DIAGST[1:0]).

The settings of the A/D data register format and the A/D conversion accuracy determines the formats for data in this register.

The A/D-converted value addition and average modes cannot be applied to the A/D self-diagnosis function. For details on self-diagnosis, see section 35.2.15. ADCER : A/D Control Extended Register.

This section describes the data formats for each condition. The register diagram and the register bit table shown in this section indicate example of the bit assignment for the left and right-justified data with 12-bit accuracy.

Table 35.14 Bit assignment for each right-justified accuracy

Accuracy	b15	b14	b13	b12	b11	b10	b9	b8	b7	b6	b5	b4	b3	b2	b1	b0
Right-justified data with 12-bit accuracy	DIAGST[1:0]		—		AD[11:0]											

Table 35.15 Bit assignment for each left-justified accuracy

Accuracy	b15	b14	b13	b12	b11	b10	b9	b8	b7	b6	b5	b4	b3	b2	b1	b0
Left-justified data with 12-bit accuracy	AD[11:0]												—		DIAGST[1:0]	

35.2.7 ADCSR : A/D Control Register

Base address: ADC120 = 0x4017_0000

Offset address: 0x000

Bit position:	15	14	13	12	11	10	9	8	7	6	5	4	3	2	1	0
Bit field:	ADST	ADCS[1:0]		—	—	ADHSC	TRGE	EXTRG	DBLE	GBADIE	—	DBLANS[4:0]				
Value after reset:	0	0	0	0	0	0	0	0	0	0	0	0	0	0	0	0

Bit	Symbol	Function	R/W
4:0	DBLANS[4:0]	Double Trigger Channel Select These bits select one analog input channel for double-trigger operation. The setting is only valid in double-trigger mode.	R/W
5	—	This bit is read as 0. The write value should be 0.	R/W
6	GBADIE	Group B Scan End Interrupt and ELC Event Enable Group B scan only works in group scan mode. 0: Disable ADC120_GBADI interrupt generation on group B scan completion. 1: Enable ADC120_GBADI interrupt generation on group B scan completion.	R/W
7	DBLE	Double Trigger Mode Select 0: Deselect double-trigger mode. 1: Select double-trigger mode.	R/W
8	EXTRG	Trigger Select*1 0: Start A/D conversion by the synchronous trigger (ELC). 1: Start A/D conversion by the asynchronous trigger (ADTRG0).	R/W
9	TRGE	Trigger Start Enable 0: Disable A/D conversion to be started by the synchronous or asynchronous trigger 1: Enable A/D conversion to be started by the synchronous or asynchronous trigger	R/W
10	ADHSC	A/D Conversion Mode Select 0: High-speed A/D conversion mode 1: Low-power A/D conversion mode	R/W
11	—	These bits are read as 0. The write value should be 0.	R/W
12	—	These bits are read as 0. The write value should be 0.	R/W
14:13	ADCS[1:0]	Scan Mode Select 0 0: Single scan mode 0 1: Group scan mode 1 0: Continuous scan mode 1 1: Setting prohibited	R/W
15	ADST	A/D Conversion Start 0: Stop A/D conversion process. 1: Start A/D conversion process.	R/W

Note 1. To start A/D conversion using an external pin (asynchronous trigger):
After a high-level signal is input to the external pin (ADTRG0), write 1 to both the TRGE and EXTRG bits in the ADCSR register and drive the ADTRG0 pin low. With these settings, the scan conversion process starts on detection of the falling edge of ADTRG0. The pulse width of the low-level input must be at least PCLKA 1.5 clock cycles.

The ADCSR register sets double-trigger mode and A/D conversion start trigger, enables or disables scan end interrupt, selects the scan mode, and starts or stops A/D conversion.

DBLANS[4:0] bits (Double Trigger Channel Select)

The DBLANS[4:0] bits select one channel for A/D conversion data duplication in double-trigger mode. This can be selected by setting the binary value of the channel number to be duplicated. The A/D conversion results of the analog input of the channel selected in the DBLANS[4:0] bits are stored in A/D Data Register y when conversion is started by the first trigger, and in the A/D Data Duplexing Register when conversion is started by the second trigger.

In double-trigger mode, the channels selected in the ADANSA0 and ADANSA1 registers, are invalid, and the channel selected in the DBLANS[4:0] bits is A/D converted instead.

When double-trigger mode is used in group scan mode, double-trigger control is only applied to group A and not to group B. Therefore, multiple channel analog input can be selected for group B even in double-trigger mode.

Only set the DBLANS[4:0] bits when the ADST bit is 0. Do not set the DBLANS[4:0] bits at the same time that you write 1 to the ADST bit.

To enter A/D-converted value addition/average mode when in double-trigger mode, select the channel using the DBLANS[4:0] bits in the ADADS0 and ADADS1 registers.

A/D-converted data from the self-diagnosis function temperature sensor output, and internal reference voltage cannot be used in double-trigger mode.

Table 35.16 Relationship between DBLANS bit Settings and Double-trigger Enabled Channels

DBLANS[4:0]	Duplication channel
0x00	AN000
0x01	AN001
0x02	AN002
0x03	AN003
0x04	AN004
0x05	AN005
0x06	AN006
0x11	AN017
0x12	AN018
0x13	AN019
0x14	AN020
0x15	AN021
0x16	AN022
0x17	AN023
0x18	AN024
0x19	AN025

GBADIE bit (Group B Scan End Interrupt and ELC Event Enable)

The GBADIE bit enables or disables group B scan end interrupt (ADC120_GBADI) in group scan mode.

DBLE bit (Double Trigger Mode Select)

The DBLE bit selects or deselects double-trigger mode. Double-trigger mode can only be operated by the synchronous trigger (ELC) selected in the ADSTRGR.TRSA[5:0] bits.

Double-trigger operation is as follows:

1. The ADC120_ADI interrupt is not output on completion of the first conversion but on completion of the second conversion.
2. The A/D conversion results from the duplication channel (selected in DBLANS[4:0]) started by the first trigger are stored in A/D Data Register y and those started by the second trigger are stored in the A/D Data Duplexing Register.

When the DBLE bit is set (double-trigger mode is selected), the channels specified in the ADANSA0 and ADANSA1 registers are invalid. Double-trigger mode is deselected by setting DBLE to 0. Setting DBLE to 1 again enables the same double-trigger operation described in 1. and 2. for first time scanning with the first trigger.

Do not select double-trigger mode in continuous scan mode. Software triggering cannot be used in double-trigger mode. Always set the ADST bit to 0 before setting the DBLE bit. Do not set the DBLE bit at that same time as writing 1 to the ADST bit.

EXTRG bit (Trigger Select)

The EXTRG bit selects the synchronous or asynchronous trigger as the trigger for starting A/D conversion.

In group scan mode, the setting of this bit takes effect on the trigger selected for group A. For group B, A/D conversion is started by the selected synchronous trigger regardless of this bit setting.

TRGE bit (Trigger Start Enable)

The TRGE bit enables or disables A/D conversion by the synchronous and asynchronous triggers. In group scan mode, set this bit to 1.

ADHSC bit (A/D Conversion Mode Select)

The ADHSC bit selects either high speed mode or low current mode for A/D conversion. For details on how to rewrite the ADHSC bit, see section 35.8.9. ADHSC Bit Rewriting Procedure.

ADCS[1:0] bits (Scan Mode Select)

The ADCS[1:0] bits select the scan mode.

In single scan mode, A/D conversion is performed for the analog inputs of the channels selected in the ADANSA0 and ADANSA1 registers, in ascending order of channel number. When 1 cycle of A/D conversion completes for all the selected channels, the scan conversion stops.

In continuous scan mode, when the ADCSR.ADST bit is 1, A/D conversion is performed for the analog inputs of the channels selected with the ADANSA0 and ADANSA1 registers , in ascending order of channel number. When 1 cycle of A/D conversion completes for all the selected channels, A/D conversion repeats from the first channel. If the ADCSR.ADST bit is set to 0 during continuous scan, A/D conversion stops even if scanning is in progress.

In group scan mode:

- Group A scanning is started by the synchronous trigger (ELC) selected in the TRSA[5:0] bits in the ADSTRGR register. A/D conversion is performed on group A analog inputs of the channels selected in the ADANSA0 and ADANSA1 registers, in ascending order of channel number. When 1 cycle of A/D conversion completes for all the selected channels, A/D conversion stops.
- Group B scanning is started by the synchronous trigger (ELC) selected in the ADSTRGR.TRSB[5:0] bits. A/D conversion is performed on group B analog inputs of the channels selected in the ADANSB0 and ADANSB1 registers, in ascending order of channel number. When 1 cycle of A/D conversion completes for all the selected channels, A/D conversion stops.

If the conversion processes in group A and group B occur at the same time, those conversions cannot be controlled separately. In this case, set group A Priority Control Setting bit (ADGSPCR.PGS) in the A/D Group Scan Priority Control Register (ADGSPCR) to 1 to assign a priority to group A conversion.

In group scan mode, select different channels and triggers for group A and group B.

When selecting temperature sensor output or internal reference voltage, select single scan mode, and perform A/D conversion after deselecting all analog input channels in the ADANSA0 and ADANSA1 registers. When A/D conversion of the temperature sensor output or internal reference voltage completes, A/D conversion stops.

Only set the ADCS[1:0] bits when the ADST bit is 0. Do not set the ADCS[1:0] bits at the same time that you write 1 to the ADST bit.

Table 35.17 Selectable targets for A/D conversion depending on scan and double-trigger mode settings

Scan mode setting	Double-trigger mode setting	Targets for A/D conversion				
		Self-diagnosis	Analog input (group A)	Analog input (group B)	Temperature sensor output	Internal reference voltage
Single scan	DBLE = 0	✓	✓	—	✓	✓
	DBLE = 1	—	✓ (1 ch only)	—	—	—
Continuous scan	DBLE = 0	✓	✓	—	—	—
	DBLE = 1	—	—	—	—	—
Group scan	DBLE = 0	✓	✓	✓	—	—
	DBLE = 1	—	✓ (1 ch only)	✓	—	—

Note: ✓: Selectable, —: Not selectable

ADST bit (A/D Conversion Start)

The ADST bit starts or stops the A/D conversion process. Before the ADST bit is set to 1, set the A/D conversion clock, the conversion mode, and the conversion target analog input.

[Setting conditions]

- 1 is written.
- The synchronous trigger (ELC) selected in the ADSTRGR.TRSA[5:0] bits is detected when ADCSR.EXTRG is 0 and ADCSR.TRGE is 1.
- The synchronous trigger (ELC) selected in the ADSTRGR.TRSB[5:0] bits is detected when ADCSR.TRGE is set to 1 in group scan mode.
- The asynchronous trigger is detected when the ADCSR.TRGE and ADCSR.EXTRG bits are set to 1 and the ADSTRGR.TRSA[5:0] bits are set to 0x00.
- When group priority operation mode is enabled (ADCSR.ADCS[1:0] = 01b and ADGSPCR.PGS = 1), the ADGSPCR.GBRP bit is set to 1, and each time A/D conversion on the group with the lowest priority is started.

[Clearing conditions]

- 0 is written.
- The A/D conversion of all the selected channels, the temperature sensor output, or the internal reference voltage completes in single scan mode.
- Group A scan completes in group scan mode.
- Group B scan completes in group scan mode.
- When group priority operation mode is enabled (ADCSR.ADCS[1:0] = 01b and ADGSPCR.PGS = 1), the ADGSPCR.GBRSCN bit is set to 1, and A/D conversion on the group with the lowest priority started by trigger completes.

Note: When group priority operation mode is enabled (ADCSR.ADCS[1:0] = 01b and ADGSPCR.PGS = 1), do not set the ADST bit to 1.

Note: When group priority operation mode is enabled (ADCSR.ADCS[1:0] = 01b and ADGSPCR.PGS = 1), do not set the ADST bit to 0. When forcing A/D conversion to terminate, follow the procedure for clearing the ADST bit.

35.2.8 ADANSA0 : A/D Channel Select Register A0

Base address: ADC120 = 0x4017_0000

Offset address: 0x004

Bit position:	15	14	13	12	11	10	9	8	7	6	5	4	3	2	1	0
Bit field:	ANSA 15	ANSA 14	ANSA 13	ANSA 12	ANSA 11	ANSA 10	ANSA 9	ANSA 8	ANSA 7	ANSA 6	ANSA 5	ANSA 4	ANSA 3	ANSA 2	ANSA 1	ANSA 0
Value after reset:	0	0	0	0	0	0	0	0	0	0	0	0	0	0	0	0

Bit	Symbol	Function	R/W
15:0	ANSA15 to ANSA0	A/D Conversion Channels Select Bit 15 (ANSA15) is associated with AN015 and bit 0 (ANSA0) is associated with AN000. 0: Do not select associated input channel. 1: Select associated input channel.	R/W

Note: n = 00 to 06
Note: Bits associated with non-existent pins are reserved. This bit is read as 0. The write value should be 0.

ADANSA0 register selects analog input channels for A/D conversion. In group scan mode, this register selects group A channels.

Only set the ADANSA0 register when the ADCSR.ADST bit is 0.

ANSAn bits (A/D Conversion Channels Select)

The ADANSA0 register selects any combination of analog input channels for A/D conversion. The channels and the number of channels can be arbitrarily set.

When performing A/D conversion of temperature sensor output or internal reference voltage, set the ADANSA0 register to 0x0000 to deselect all analog input channels.

In double trigger mode, the channels selected in the ADANSA0 register are invalid, and the channel selected in the ADCSR.DBLANS[4:0] bits is selected in group A instead.

When group scan mode is selected, do not select the channels specified in A/D Channel Select Register B0 (ADANSB0) and A/D Channel Select Register B1 (ADANSB1).

35.2.9 ADANSA1 : A/D Channel Select Register A1

Base address: ADC120 = 0x4017_0000

Offset address: 0x006

Bit position:	15	14	13	12	11	10	9	8	7	6	5	4	3	2	1	0
Bit field:	ANSA 31	ANSA 30	ANSA 29	ANSA 28	ANSA 27	ANSA 26	ANSA 25	ANSA 24	ANSA 23	ANSA 22	ANSA 21	ANSA 20	ANSA 19	ANSA 18	ANSA 17	ANSA 16
Value after reset:	0	0	0	0	0	0	0	0	0	0	0	0	0	0	0	0

Bit	Symbol	Function	R/W
15:0	ANSA31 to ANSA16	A/D Conversion Channels Select Bit 15 (ANSA31) is associated with AN031 and bit 0 (ANSA16) is associated with AN016. 0: Do not select associated input channel. 1: Select associated input channel.	R/W

Note: n = 17 to 25
Note: Bits associated with non-existent pins are reserved. This bit is read as 0. The write value should be 0.

ADANSA1 register selects analog input channels for A/D conversion. In group scan mode, this register selects group A channels.

Only set the ADANSA1 register when the ADCSR.ADST bit is 0.

ANSAn bits (A/D Conversion Channels Select)

The ADANSA1 register selects any combination of analog input channels for A/D conversion. The channels and the number of channels can be arbitrarily set.

When performing A/D conversion of temperature sensor output or internal reference voltage, set the ADANSA1 register to 0x0000 to deselect all analog input channels.

In double trigger mode, the channels selected in the ADANSA1 register are invalid, and the channel selected in the ADCSR.DBLANS[4:0] bits is selected in group A instead.

When group scan mode is selected, do not select the channels specified in A/D Channel Select Register B0 (ADANSB0) and A/D Channel Select Register B1 (ADANSB1).

35.2.10 ADANSB0 : A/D Channel Select Register B0

Base address: ADC120 = 0x4017_0000

Offset address: 0x014

Bit position:	15	14	13	12	11	10	9	8	7	6	5	4	3	2	1	0
Bit field:	ANSB15	ANSB14	ANSB13	ANSB12	ANSB11	ANSB10	ANSB9	ANSB8	ANSB7	ANSB6	ANSB5	ANSB4	ANSB3	ANSB2	ANSB1	ANSB0
Value after reset:	0	0	0	0	0	0	0	0	0	0	0	0	0	0	0	0

Bit	Symbol	Function	R/W
15:0	ANSB15 to ANSB0	A/D Conversion Channels Select Bit 15 (ANSB15) is associated with AN015 and bit 0 (ANSB0) is associated with AN000. 0: Do not select associated input channel. 1: Select associated input channel.	R/W

Note: n = 00 to 06

Note: Bits associated with non-existent pins are reserved. This bit is read as 0. The write value should be 0.

ADANSB0 selects analog input channels for A/D conversion in group B when group scan mode is selected. The ADANSB0 register is not used in any scan mode other than group scan mode.

Only set the ADANSB0 register when the ADCSR.ADST bit is 0.

ANSBn bits (A/D Conversion Channels Select)

The ADANSB0 register selects any combination of analog input channels in group B for A/D conversion when group scan mode is selected. The ADANSB0 register is used for group scan mode only and not for any other modes.

Do not select channels specified in group A as selected in the ADANSA0 and ADANSA1 registers or the ADCSR.DBLANS[4:0] bits in double-trigger mode.

When performing A/D conversion of temperature sensor output or internal reference voltage, set the ADANSB0 register to 0x0000 to deselect all analog input channels.

35.2.11 ADANSB1 : A/D Channel Select Register B1

Base address: ADC120 = 0x4017_0000

Offset address: 0x016

Bit position:	15	14	13	12	11	10	9	8	7	6	5	4	3	2	1	0
Bit field:	ANSB31	ANSB30	ANSB29	ANSB28	ANSB27	ANSB26	ANSB25	ANSB24	ANSB23	ANSB22	ANSB21	ANSB20	ANSB19	ANSB18	ANSB17	ANSB16
Value after reset:	0	0	0	0	0	0	0	0	0	0	0	0	0	0	0	0

Bit	Symbol	Function	R/W
15:0	ANSB31 to ANSB16	A/D Conversion Channels Select 0: Do not select associated input channel. 1: Select associated input channel.	R/W

Note: n = 17 to 25

Note: Bits associated with non-existent pins are reserved. This bit is read as 0. The write value should be 0.

ADANSB1 selects analog input channels for A/D conversion in group B when group scan mode is selected. The ADANSB1 register is not used in any scan mode other than group scan mode.

Only set the ADANSB1 register when the ADCSR.ADST bit is 0.

ANSBn bits (A/D Conversion Channels Select)

The ADANSB1 register selects any combination of analog input channels in group B for A/D conversion when group scan mode is selected. The ADANSB1 register is used for group scan mode only and not for any other modes.

Do not select channels specified in group A as selected in the ADANSA0 and ADANSA1 registers or the ADCSR.DBLANS[4:0] bits in double-trigger mode.

When performing A/D conversion of temperature sensor output or internal reference voltage, set the ADANSB1 register to 0x0000 to deselect all analog input channels.

35.2.12 ADADS0 : A/D-Converted Value Addition/Average Channel Select Register 0

Base address: ADC120 = 0x4017_0000

Offset address: 0x008

Bit position:	15	14	13	12	11	10	9	8	7	6	5	4	3	2	1	0
Bit field:	ADS15	ADS14	ADS13	ADS12	ADS11	ADS10	ADS9	ADS8	ADS7	ADS6	ADS5	ADS4	ADS3	ADS2	ADS1	ADS0
Value after reset:	0	0	0	0	0	0	0	0	0	0	0	0	0	0	0	0

Bit	Symbol	Function	R/W
15:0	ADS15 to ADS0	A/D-Converted Value Addition/Average Channel Select Bit 15 (ADS15) is associated with AN015 and bit 0 (ADS0) is associated with AN000. 0: Do not select associated input channel. 1: Select associated input channel.	R/W

Note: n = 00 to 06

Note: Bits associated with non-existent pins are reserved. This bit is read as 0. The write value should be 0.

ADSn bits (A/D-Converted Value Addition/Average Channel Select)

The ADSn bits determine which A/D-converted channels are subject to A/D-converted value addition/averaging. When an ADSn bit associated with a channel selected for A/D conversion is set to 1, A/D conversion of the analog input of the respective channel is performed successively 1, 2, 3, 4, or 16 times, as specified in the ADC[2:0] bits in the ADADC register.

When the ADADC.AVEE bit is 0, the value obtained by addition is stored in the A/D data register. When the ADADC.AVEE bit is 1, the mean value of the results obtained by addition is stored in the A/D data register.

The ADSn bits apply only to channels that are selected for A/D conversion in:

- The ANSAn bits in the ADANSA0 register or the DBLANS[4:0] bits in the ADCSR register
- The ANSBn bits in the ADANSB0 register

For channels on which the A/D conversion is performed and for which addition/average mode is not selected, a normal 1-time conversion is executed, and the conversion result is stored in the A/D data register.

Only set ADADS0 register bits when the ADCSR.ADST bit is 0.

Figure 35.2 shows a scanning operation sequence in which the ADADS0 register bits (channel c and g) are set to 1. In this figure:

- Addition mode is selected (ADADC.AVEE = 0)
- The number of conversions is set to 4 (ADADC.ADC[1:0] = 11b)
- The analog input channels (a to h) are selected by ADANSA0 register in continuous scan mode (ADCSR.ADCS[1:0] = 10b).

The conversion process begins with analog input A (channel a). The analog input C (channel c) conversion is performed successively 4 times and the added value is returned to A/D Data Register c (ADDRc). Next, the analog input D (channel d) conversion process is started. The analog input G (channel g) is performed successively 4 times and the added value is returned to A/D Data Register g (ADDRg). After conversion of analog input H (channel h), the conversion operation repeats in the same sequence starting with analog input A (channel a).

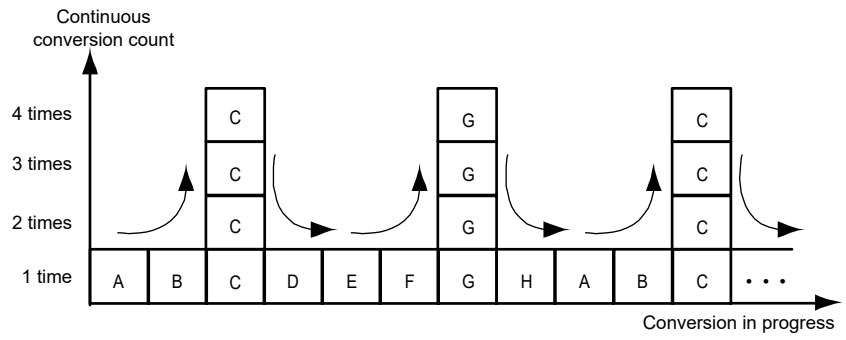

Note: A to H are analog inputs (channel a to h)

Figure 35.2 Scan conversion sequence with ADADC.ADC[2:0] = 011b, set 1 for analog inputs C and G by ADADS0/1

35.2.13 ADADS1 : A/D-Converted Value Addition/Average Channel Select Register 1

Base address: ADC120 = 0x4017_0000

Offset address: 0x00A

Bit position:	15	14	13	12	11	10	9	8	7	6	5	4	3	2	1	0
Bit field:	ADS31	ADS30	ADS29	ADS28	ADS27	ADS26	ADS25	ADS24	ADS23	ADS22	ADS21	ADS20	ADS19	ADS18	ADS17	ADS16
Value after reset:	0	0	0	0	0	0	0	0	0	0	0	0	0	0	0	0

Bit	Symbol	Function	R/W
15:0	ADS31 to ADS16	A/D-Converted Value Addition/Average Channel Select Bit 15 (ADS31) is associated with AN031 and bit 0 (ADS16) is associated with AN016. 0: Do not select associated input channel. 1: Select associated input channel.	R/W

Note: n = 17 to 25

Note: Bits associated with non-existent pins are reserved. This bit is read as 0. The write value should be 0.

ADSn bits (A/D-Converted Value Addition/Average Channel Select)

The ADSn bits determine which A/D-converted channels are subject to A/D-converted value addition/averaging. When an ADSn bit associated with a channel selected for A/D conversion is set to 1, A/D conversion of the analog input of the respective channel is performed successively 1, 2, 3, 4, or 16 times, as specified in the ADC[2:0] bits in the ADADC register.

When the ADADC.AVEE bit is 0, the value obtained by addition is stored in the A/D data register. When the ADADC.AVEE bit is 1, the mean value of the results obtained by addition is stored in the A/D data register.

The ADSn bits apply only to channels that are selected for A/D conversion in:

- The ANSAn bits in the ADANSA1 register or the DBLANS[4:0] bits in the ADCSR register
- The ANSBn bits in the ADANSB1 register.

For channels on which the A/D conversion is performed and for which addition/average mode is not selected, a normal 1-time conversion is executed, and the conversion result is stored in the A/D data register.

Only set ADADS1 register when the ADCSR.ADST bit is 0.

35.2.14 ADADC : A/D-Converted Value Addition/Average Count Select Register

Base address: ADC120 = 0x4017_0000

Offset address: 0x00C

Bit position:	7	6	5	4	3	2	1	0
Bit field:	AVEE	—	—	—	—	ADC[2:0]		
Value after reset:	0	0	0	0	0	0	0	0

Bit	Symbol	Function	R/W
2:0	ADC[2:0]	Addition/Average Count Select 0 0 0: 1-time conversion (no addition, same as normal conversion) 0 0 1: 2-time conversion (1 addition) 0 1 0: 3-time conversion (2 additions) 0 1 1: 4-time conversion (3 additions) 1 0 1: 16-time conversion (15 additions) Others: Setting prohibited	R/W
6:3	—	These bits are read as 0. The write value should be 0.	R/W
7	AVEE	Average Mode Select 0: Enable addition mode 1: Enable average mode	R/W

ADADC sets the addition or average mode and addition count for A/D conversion. Table 35.18 lists the settable combinations of ADADC register.

Table 35.18 Settable combinations of ADADC register

Mode select (AVEE)	Conversion time				
	1-time	2-time	3-time	4-time	16-time
Addition mode (AVEE = 0)	✓	✓	✓	✓	✓
Average mode (AVEE = 1)	—	✓	—	✓	—

Note: ✓: Selectable, —: Not selectable

ADC[2:0] bits (Addition/Average Count Select)

The ADC[2:0] bits set the addition count in all channels for which A/D conversion and addition/average mode are selected, including the channel selected in double trigger mode with the ADCSR.DBLANS[4:0] bits. The count also applies to A/D conversion of the temperature sensor output and the internal reference voltage.
When self-diagnosis is executed (ADCER.DIAGM = 1), do not set the ADC[2:0] bits to any value other than 000b.

AVEE bit (Average Mode Select)

The AVEE bit selects addition or average mode in all channels for which A/D conversion and addition/average mode are selected, including the channels selected in double-trigger mode in the ADCSR.DBLANS[4:0] bits, temperature sensor output, and internal reference voltage.

35.2.15 ADCER : A/D Control Extended Register

Base address: ADC120 = 0x4017_0000

Offset address: 0x00E

Bit position:	15	14	13	12	11	10	9	8	7	6	5	4	3	2	1	0
Bit field:	ADRFMT	—	—	—	DIAGM	DIAGLD	DIAGVAL[1:0]		—	—	ACE	—	—	—	—	—
Value after reset:	0	0	0	0	0	0	0	0	0	0	0	0	0	0	0	0

Bit	Symbol	Function	R/W
4:0	—	These bits are read as 0. The write value should be 0.	R/W
5	ACE	A/D Data Register Automatic Clearing Enable 0: Disable automatic clearing 1: Enable automatic clearing	R/W
7:6	—	These bits are read as 0. The write value should be 0.	R/W
9:8	DIAGVAL[1:0]	Self-Diagnosis Conversion Voltage Select 0 0: Setting prohibited when self-diagnosis is enabled 0 1: 0 volts 1 0: Reference voltage*1 × 1/2 1 1: Reference voltage*1	R/W
10	DIAGLD	Self-Diagnosis Mode Select 0: Select rotation mode for self-diagnosis voltage 1: Select mixed mode for self-diagnosis voltage	R/W
11	DIAGM	Self-Diagnosis Enable 0: Disable ADC12 self-diagnosis 1: Enable ADC12 self-diagnosis	R/W
14:12	—	These bits are read as 0. The write value should be 0.	R/W
15	ADRFMT	A/D Data Register Format Select 0: Select right-justified for the A/D data register format 1: Select left-justified for the A/D data register format	R/W

Note 1. The reference voltage refers to VREFH0, AVCC0, or internal reference voltage by ADHVREFCNT setting.

ACE bit (A/D Data Register Automatic Clearing Enable)

The ACE bit enables or disables automatic clearing (all 0) of the ADDRy, ADRD, ADDBLDR, ADDBLDRA, ADDBLDRB, ADTSDR, or ADOCDR register after any of these registers is read by the CPU or DTC. Automatic clearing of the A/D data registers enables detection of failures that are not updated in the A/D data registers. For details, see section 35.3.7. Usage Example of A/D Data Register Automatic Clearing Function.

DIAGVAL[1:0] bits (Self-Diagnosis Conversion Voltage Select)

The DIAGVAL[1:0] bits select the voltage value used in self-diagnosis fixed voltage mode. For details, see the DIAGLD bit description.

Do not execute self-diagnosis by setting the DIAGLD bit to 1 when the DIAGVAL[1:0] bits are set to 00b.

DIAGLD bit (Self-Diagnosis Mode Select)

The DIAGLD bit selects whether the three voltage values are rotated, or the fixed voltage is used in self-diagnosis.

Setting the DIAGLD bit to 0 selects conversion of the voltages in rotation mode, where 0 V, the reference voltage × 1/2, and the reference voltage are converted, in that order. After reset and when self-diagnosis voltage rotation mode is selected, self-diagnosis is executed from 0 V. The self-diagnosis voltage value does not return to 0 V when scan conversion completes. When scan conversion is restarted, rotation starts at the voltage value following the previous value.

Setting the DIAGLD bit to 1 selects fixed voltage, in which the fixed voltage specified in the ADCER.DIAGVAL[1:0] bits is converted. If fixed mode is switched to rotation mode, rotation starts at the fixed voltage value.

Only set the DIAGLD bit when the ADCSR.ADST bit is 0.

DIAGM bit (Self-Diagnosis Enable)

The DIAGM bit enables or disables self-diagnosis.

Self-diagnosis is used to detect a failure of the ADC12. In self-diagnosis mode, one of the three voltage values (0 V, the reference voltage × 1/2, or the reference voltage) is converted. When conversion completes, information on the converted voltage and the conversion result is stored into the A/D Self-Diagnosis Data Register (ADRD). The ADRD register can be read to determine whether the conversion result falls within the normal or abnormal range.

Self-diagnosis is executed once at the beginning of each scan, and one of the three voltages is converted. In double trigger mode (ADCSR.DBLE = 1), self-diagnosis (DIAGM = 0) is deselected. When self-diagnosis is selected in group scan mode, self-diagnosis is executed separately for group A and group B.

Only set the DIAGM bit when the ADCSR.ADST bit is 0.

ADRFMT bit (A/D Data Register Format Select)

The ADRFMT bit specifies flush-right or flush-left for data to be stored in the ADDRy, ADDBLDR, ADDBLDRA, ADDBLDRB, ADTSDR, ADOCDR, ADCMPDR0/1, ADWINLLB, ADWINULB, or ADRD register.

Only set the ADRFMT bit when the ADCSR.ADST bit is 0.

35.2.16 ADSTRGR : A/D Conversion Start Trigger Select Register

Base address: ADC120 = 0x4017_0000

Offset address: 0x010

Bit position:	15	14	13	12	11	10	9	8	7	6	5	4	3	2	1	0
Bit field:	—	—	TRSA[5:0]						—	—	TRSB[5:0]					
Value after reset:	0	0	0	0	0	0	0	0	0	0	0	0	0	0	0	0

Bit	Symbol	Function	R/W
5:0	TRSB[5:0]	A/D Conversion Start Trigger Select for Group B Select the A/D conversion start trigger for group B in group scan mode.	R/W
7:6	—	These bits are read as 0. The write value should be 0.	R/W
13:8	TRSA[5:0]	A/D Conversion Start Trigger Select Select the A/D conversion start trigger in single scan mode and continuous scan mode. In group scan mode, the A/D conversion start trigger for group A is selected.	R/W
15:14	—	These bits are read as 0. The write value should be 0.	R/W

TRSB[5:0] bits (A/D Conversion Start Trigger Select for Group B)

The TRSB[5:0] bits select the trigger to start scanning of the analog input selected in group B. The TRSB[5:0] bits must only be set in group scan mode and are not used in any other scan mode. For the scan conversion start trigger for group B, setting a software trigger or an asynchronous trigger is prohibited. In group scan mode, set the TRSB[5:0] bits to a value other than 0x00 and set the ADCSR.TRGE bit to 1.

When group A is given priority in group scan mode, setting the ADGSPCR.GBRP bit to 1 allows group B to continuously operate in single scan mode. When setting the ADGSPCR.GBRP bit to 1, set the TRSB[5:0] bits to 0x3F. The issuance period for a conversion trigger must be more than or equal to the actual scan conversion time (t_{SCAN}). If the issuance period is less than t_{SCAN}, A/D conversion by the trigger might have no effect.

When the GPT module is selected as an A/D conversion start trigger, a delay for synchronization processing occurs. For details, see section 35.3.6. Analog Input Sampling and Scan Conversion Time.

Table 35.19 lists the A/D conversion startup sources selected in the TRSB[5:0] bits.

Table 35.19 Selection of A/D conversion start sources in the TRSB[5:0] bits

Source	Remarks	TRSB[5]	TRSB[4]	TRSB[3]	TRSB[2]	TRSB[1]	TRSB[0]
Trigger source deselected state	—	1	1	1	1	1	1
ELC_AD00	ELC	0	0	1	0	0	1
ELC_AD01	ELC	0	0	1	0	1	0
ELC_AD00, ELC_AD01	ELC	0	0	1	0	1	1

TRSA[5:0] bits (A/D Conversion Start Trigger Select)

The TRSA[5:0] bits select the trigger to start A/D conversion in single scan mode and continuous scan mode, or the trigger to start scanning of group A analog inputs in group scan mode. When scanning is executed in group scan mode or double trigger mode, software trigger or asynchronous trigger is prohibited.

- When using a synchronous trigger (ELC), set the TRGE bit in the ADCSR register to 1 and set the EXTRG bit in the ADCSR register to 0.
- When using the asynchronous trigger (ADTRG0), set the TRGE bit in the ADCSR register to 1 and set the EXTRG bit in the ADCSR register to 1.
- Software trigger (ADCSR.ADST) is enabled regardless of the settings of the ADCSR.TRGE bit, the ADCSR.EXTRG bit, or the TRSA[5:0] bits.

The issuance period for a conversion trigger must be more than or equal to the actual scan conversion time (tSCAN). If the issuance period is less than tSCAN, A/D conversion by a trigger might have no effect.

When the GPT module is selected as an A/D conversion start trigger, a delay for synchronization processing occurs. For details, see section 35.3.6. Analog Input Sampling and Scan Conversion Time.

Table 35.20 lists the A/D conversion start sources selected in the TRSA[5:0] bits.

Table 35.20 Selection of A/D activation sources in the TRSA[5:0] bits

Source	Remarks	TRSA[5]	TRSA[4]	TRSA[3]	TRSA[2]	TRSA[1]	TRSA[0]
Trigger source deselected state	—	1	1	1	1	1	1
ADTRG0	Input pin for the trigger	0	0	0	0	0	0
ELC_AD00	ELC	0	0	1	0	0	1
ELC_AD01	ELC	0	0	1	0	1	0
ELC_AD00, ELC_AD01	ELC	0	0	1	0	1	1

35.2.17 ADEXICR : A/D Conversion Extended Input Control Registers

Base address: ADC120 = 0x4017_0000

Offset address: 0x012

Bit position:	15	14	13	12	11	10	9	8	7	6	5	4	3	2	1	0
Bit field:	—	—	—	—	—	—	OCSA	TSSA	—	—	—	—	—	—	OCSAD	TSSAD
Value after reset:	0	0	0	0	0	0	0	0	0	0	0	0	0	0	0	0

Bit	Symbol	Function	R/W
0	TSSAD	Temperature Sensor Output A/D-Converted Value Addition/Average Mode Select 0: Do not select addition/average mode for temperature sensor output. 1: Select addition/average mode for temperature sensor output.	R/W
1	OCSAD	Internal Reference Voltage A/D-Converted Value Addition/Average Mode Select 0: Do not select addition/average mode for internal reference voltage. 1: Select addition/average mode for internal reference voltage.	R/W
7:2	—	These bits are read as 0. The write value should be 0.	R/W
8	TSSA	Temperature Sensor Output A/D Conversion Select 0: Disable A/D conversion of temperature sensor output 1: Enable A/D conversion of temperature sensor output	R/W
9	OCSA	Internal Reference Voltage A/D Conversion Select 0: Disable A/D conversion of internal reference voltage 1: Enable A/D conversion of internal reference voltage	R/W
15:10	—	These bits are read as 0. The write value should be 0.	R/W

TSSAD bit (Temperature Sensor Output A/D-Converted Value Addition/Average Mode Select)

When the TSSAD bit is set to 1, A/D conversion of the temperature sensor output is selected and performed successively the number of times specified in the ADC[2:0] bits in ADADC. When the ADADC.AVEE bit is 0, the value obtained by

addition (integration) is returned to the A/D Temperature Sensor Data Register (ADTSDR). When the ADADC.AVEE bit is 1, the mean value is returned to ADTSDR.

Only set the TSSAD bit while the ADCSR.ADST bit is 0.

OCSAD bit (Internal Reference Voltage A/D-Converted Value Addition/Average Mode Select)

When the OCSAD bit is set to 1, A/D conversion of the internal reference voltage is selected and performed successively the number of times specified in the ADC[2:0] bits in ADADC. When the ADADC.AVEE bit is 0, the value obtained by addition (integration) is returned to the A/D Internal Reference Voltage Data Register (ADOCDR). When the ADADC.AVEE bit is 1, the mean value is returned to ADOCDR.

Only set the OCSAD bit while the ADCSR.ADST bit is 0.

TSSA bit (Temperature Sensor Output A/D Conversion Select)

The TSSA bit selects A/D conversion of the temperature sensor output. When executing the A/D conversion of the temperature sensor output:

1. Set all bits in the ADANSA0/1 and ADANSB0/1 registers, the ADCSR.DBLE bit, and the ADEXICR.OCSA bit to 0.
2. Execute the A/D conversion in single scan mode.

Only set the TSSA bit when the ADCSR.ADST bit is 0.

When executing A/D conversion of the temperature sensor output, the ADDISCR register is set to 0x0F and the A/D converter executes discharge (15 ADCLK) before executing sampling. The required sampling time is 5 µs or more.

The A/D converter executes discharge each time A/D conversion is executed on the temperature sensor output.

OCSA bit (Internal Reference Voltage A/D Conversion Select)

The OCSA bit selects A/D conversion of the internal reference voltage. When executing A/D conversion of the internal reference voltage:

1. Set all bits in the ADANSA0/1 and ADANSB0/1 registers, the ADCSR.DBLE bit, and the ADEXICR.TSSA bits to 0.
2. Execute the A/D conversion in single scan mode.

Only set the OCSA bit when the ADCSR.ADST bit is 0.

When executing A/D conversion of the internal reference voltage, the ADDISCR register are set to 0x0F and the A/D converter executes discharge (15 ADCLK) before executing sampling. The required sampling time is 5 µs or more.

The A/D converter executes discharge each time A/D conversion is executed on the internal reference voltage.

35.2.18 ADSSTRn/ADSSTRL/ADSSTRT/ADSSTRO : A/D Sampling State Register (n = 0 to 6)

Base address: ADC120 = 0x4017_0000

Offset address: 0x0E0 + 0x1 × n (n = 0 to 6)
0x0DD (ADSSTRL)
0x0DE (ADSSTRT)
0x0DF (ADSSTRO)

Bit position:	7	6	5	4	3	2	1	0
Bit field:	SST[7:0]							
Value after reset:	0	0	0	0	1	1	0	1

Bit	Symbol	Function	R/W
7:0	SST[7:0]	Sampling Time Setting These bits set the sampling time in the range from 5 to 255 states.	R/W

The ADSSTRn register sets the sampling time for analog input.

The sampling time can be adjusted if the impedance of the analog input signal source is too high to secure sufficient sampling time, or if the ADCLK clock is slow. The set value indicates the time for one ADCLK cycle, and the required sampling time is specified by the voltage conditions. For details, see section 43.4. ADC12 Characteristics.

The lower limit of the sampling time setting depends on the frequency ratio:

- If the frequency ratio of PCLKA to PCLKC (ADCLK) = 1:1, 2:1, 4:1, or 8:1, the sampling time must be set to a value of more than 5 states
- If the frequency ratio of PCLKA to PCLKC (ADCLK) = 1:2 or 1:4, the sampling time must be set to a value of more than 6 states.

Table 35.21 shows the relationship between the A/D Sampling State Register and the associated channels. For details, see section 35.3.6. Analog Input Sampling and Scan Conversion Time.

Only set the SST[7:0] bits when the ADCSR.ADST bit is 0.

Table 35.21 Relationship between A/D sampling state register and associated channels

Bit name	Associated channels
ADSSTRn.SST[7:0] bits (n = 0 to 6)*1	AN0n (n = 00 to 06)
ADSSTRL.SST[7:0] bits	AN0n (n = 17 to 25)
ADSSTRT.SST[7:0] bits	Temperature sensor output*2
ADSSTRO.SST[7:0] bits	Internal reference voltage*2

Note 1. When the self-diagnosis function is selected, the sampling time set in the ADSSTR0.SST[7:0] bits is applied.
Note 2. When the temperature sensor output or the internal reference voltage is converted, set the sampling time to more than 5 μs.

35.2.19 ADDISCR : A/D Disconnection Detection Control Register

Base address: ADC120 = 0x4017_0000

Offset address: 0x07A

Bit position:	7	6	5	4	3	2	1	0
Bit field:	—	—	—	PCHG	ADNDIS[3:0]			
Value after reset:	0	0	0	0	0	0	0	0

Bit	Symbol	Function	R/W
3:0	ADNDIS[3:0]	Disconnection Detection Assist Setting 0x0: The disconnection detection assist function is disabled 0x1: Setting prohibited Others: The number of states for the discharge or precharge period.	R/W
4	PCHG	Precharge/discharge select 0: Discharge 1: Precharge	R/W
7:5	—	These bits are read as 0. The write value should be 0.	R/W

The ADDISCR register selects either precharge or discharge, and the period of precharge or discharge for the A/D disconnection detection assist function. Only set the ADDISCR register when the ADCSR.ADST bit is 0. When the temperature sensor output or internal reference voltage is converted, the A/D converter executes discharge automatically.

This operation is achieved by setting the ADDISCR register to 0x0F (15 ADCLK) when ADEXICR.OCSA or TSSA is set to 1. After executing discharge, the A/D converter executes sampling.

Disable the disconnection detection assist function if any of the following functions are used:

- The temperature sensor
- The internal reference voltage
- A/D self-diagnosis

ADNDIS[3:0] bits (Disconnection Detection Assist Setting)

The ADNDIS[3:0] bits specify the period of precharge or discharge. When ADNDIS[3:0] = 0000b, the disconnection detection assist function is disabled. Setting the ADNDIS[3:0] bits to 0001b is prohibited. Except when ADNDIS[3:0] = 0000b or 0001b, the specified value indicates the number of states for the period of precharge or discharge. When the ADNDIS[3:0] bits are set to any values other than 0000b or 0001b, the disconnection detection assistance function is enabled.

PCHG bit (Precharge/discharge select)

The PCHG bit selects either precharge or discharge.

35.2.20 ADACSR : A/D Conversion Operation Mode Select Register

Base address: ADC120 = 0x4017_0000

Offset address: 0x07E

Bit position:	7	6	5	4	3	2	1	0
Bit field:	—	—	—	—	—	—	ADSAC	—
Value after reset:	0	0	0	0	0	0	0	0

Bit	Symbol	Function	R/W
0	—	This bit is read as 0. The write value should be 0.	R/W
1	ADSAC	Successive Approximation Control Setting 0: Normal conversion mode (default) 1: Fast conversion mode	R/W
7:2	—	These bits are read as 0. The write value should be 0.	R/W

The ADACSR register selects the A/D conversion operation mode.

ADSAC bit (Successive Approximation Control Setting)

The ADSAC bit selects either normal conversion mode or fast conversion mode for A/D conversion.

When the ADSAC bit is 0, the ADCLK maximum frequency is 48 MHz. At high-speed A/D conversion mode (ADCSR.ADHSC = 0), the conversion time of successive approximation is 31.5 ADCLK. At Low-Power A/D conversion mode (ADCSR.ADHSC = 1), the conversion time of successive approximation is 40.5 ADCLK.

When the ADSAC bit is 1, the ADCLK maximum frequency is 48 MHz. At high-speed A/D conversion mode (ADCSR.ADHSC = 0), the conversion time of successive approximation is 21.5 ADCLK. At Low-Power A/D conversion mode (ADCSR.ADHSC = 1), the conversion time of successive approximation is 27.5 ADCLK.

For details, see section 35.3.6. Analog Input Sampling and Scan Conversion Time

35.2.21 ADGSPCR : A/D Group Scan Priority Control Register

Base address: ADC120 = 0x4017_0000

Offset address: 0x080

Bit position:	15	14	13	12	11	10	9	8	7	6	5	4	3	2	1	0
Bit field:	GBRP	—	—	—	—	—	—	—	—	—	—	—	—	—	GBRSCN	PGS
Value after reset:	0	0	0	0	0	0	0	0	0	0	0	0	0	0	0	0

Bit	Symbol	Function	R/W
0	PGS	Group Priority Operation Setting*1 0: Operate without group priority control. 1: Operate with group priority control.	R/W

Bit	Symbol	Function	R/W
1	GBRSCN	Lower-Priority Group Restart Setting (enabled only when PGS = 1 and reserved when PGS = 0.) 0: Disable rescanning of the group that was stopped in group priority operation 1: Enable rescanning of the group that was stopped in group priority operation.	R/W
14:2	—	These bits are read as 0. The write value should be 0.	R/W
15	GBRP	Single Scan Continuous Start*2 (enabled only when PGS = 1 and reserved when PGS = 0.) 0: Single scan is not continuously activated. 1: Single scan for the group with the lower-priority is continuously activated.	R/W

Note 1. The ADCSR.ADCS[1:0] bits must be set to 01b (group scan mode) before setting PGS to 1. Operation is not guaranteed if these bits are set to any other value.

Note 2. When the GBRP bit is set to 1, single scan is performed continuously for the group with the lower-priority regardless of the setting in the GBRSCN bit.

PGS bit (Group Priority Operation Setting)

The PGS bit controls group priority operation in group scan mode. Set the PGS bit to 1 to enable group priority operation.

The ADCSR.ADCS[1:0] bits must be set to 01b (group scan mode) before setting the PGS bit to 1. Operation is not guaranteed if the bits are set to any other value.

When the PGS bit is set to 0, a clear operation must be performed by software as described in section 35.8.3. Constraints on Stopping A/D Conversion. When the PGS bit is set to 1, use the settings described in section 35.3.4.3. Group Priority Operation.

GBRSCN bit (Lower-Priority Group Restart Setting)

The GBRSCN bit controls the restarting of scan operation in group priority operation.

When the GBRSCN bit is set to 1, if the scan operation of a lower-priority group is stopped by a trigger input of a priority group, the lower-priority group scanning is restarted on completion of the priority group scanning. If a trigger of a lower-priority group is input during scanning of the priority group, the lower-priority group scanning is started on completion of the priority group scanning.

When the GBRSCN bit is set to 0, triggers input during scanning are ignored. Set the GBRSCN bit while the ADCSR.ADST bit is 0.

GBRP bit (Single Scan Continuous Start)

The GBRP bit is set when a single scan operation is to be performed continuously on the group with the lower-priority.

Setting the GBRP bit to 1 starts a single scan of the group with the lower-priority. On completion of the scan, another single scan of the group with the lower-priority is started automatically. If scanning has been stopped during group priority operation, single scan of the group with the lower-priority is automatically restarted on completion of the A/D conversion of the priority group.

Before setting the GBRP bit to 1, disable input of a trigger for the lower-priority group. If the GBRP bit is set to 1, rescanning is performed only on the group with the lower-priority even if the GBRSCN bit is set to 0.

35.2.22 ADCMPCR : A/D Compare Function Control Register

Base address: ADC120 = 0x4017_0000

Offset address: 0x090

Bit position:	15	14	13	12	11	10	9	8	7	6	5	4	3	2	1	0
Bit field:	CMPAIE	WCMPE	CMPBIE	—	CMPAE	—	CMPBE	—	—	—	—	—	—	—	CMPAB[1:0]	
Value after reset:	0	0	0	0	0	0	0	0	0	0	0	0	0	0	0	0

Bit	Symbol	Function	R/W
1:0	CMPAB[1:0]	Window A/B Composite Conditions Setting These bits are valid when both window A and window B are enabled (CMPAE = 1 and CMPBE = 1). 0 0: Output ADC120_WCMPM when window A OR window B comparison conditions are met. Otherwise, output ADC120_WCMPUM. 0 1: Output ADC120_WCMPM when window A EXOR window B comparison conditions are met. Otherwise, output ADC120_WCMPUM. 1 0: Output ADC120_WCMPM when window A AND window B comparison conditions are met. Otherwise, output ADC120_WCMPUM. 1 1: Setting prohibited.	R/W
8:2	—	These bits are read as 0. The write value should be 0.	R/W
9	CMPBE	Compare Window B Operation Enable 0: Disable compare window B operation. Disable ADC120_WCMPM and ADC120_WCMPUM outputs. 1: Enable compare window B operation.	R/W
10	—	This bit is read as 0. The write value should be 0.	R/W
11	CMPAE	Compare Window A Operation Enable 0: Disable compare window A operation. Disable ADC120_WCMPM and ADC120_WCMPUM outputs. 1: Enable compare window A operation.	R/W
12	—	This bit is read as 0. The write value should be 0.	R/W
13	CMPBIE	Compare B Interrupt Enable 0: Disable ADC120_CMPBI interrupt when comparison conditions (window B) are met. 1: Enable ADC120_CMPBI interrupt when comparison conditions (window B) are met.	R/W
14	WCMPE	Window Function Setting 0: Disable window function Window A and window B operate as a comparator to compare the single value on the lower side with the A/D conversion result. 1: Enable window function Window A and window B operate as a comparator to compare the two values on the upper and lower sides with the A/D conversion result.	R/W
15	CMPAIE	Compare A Interrupt Enable 0: Disable ADC120_CMPAI interrupt when comparison conditions (window A) are met. 1: Enable ADC120_CMPAI interrupt when comparison conditions (window A) are met.	R/W

CMPAB[1:0] bits (Window A/B Composite Conditions Setting)

The CMPAB[1:0] bits are valid when both window A and window B are enabled (CMPAE = 1 and CMPBE = 1) in single scan mode. These bits specify the compare function match/mismatch event output conditions and monitoring conditions of ADWINMON.MONCOMB. Only set the CMPAB[1:0] bits while the ADCSR.ADST bit is 0.

CMPBE bit (Compare Window B Operation Enable)

The CMPBE bit enables or disables the compare window B operation. Set the CMPBE bit while the ADCSR.ADST bit is 0.

Set this bit to 0 before setting the following registers:

- A/D Channel Select Registers A0, A1, B0, B1 (ADANSA0, ADANSA1, ADANSB0, ADANSB1)
- OCSA, or TSSA bits in the A/D Conversion Extended Input Control Register (ADEXICR)
- CMPCHB[5:0] bits in the Window B Channel Select Register (ADCMPBNSR)

CMPAE bit (Compare Window A Operation Enable)

The CMPAE bit enables or disables the compare window A operation. Set the CMPAE bit while the ADCSR.ADST bit is 0.

Set this bit to 0 before setting the following registers:

- A/D Channel Select Registers A0, A1, B0, B1 (ADANSA0, ADANSA1, ADANSB0, ADANSB1)
- TSSB, OCSA, or TSSA bits in the A/D Conversion Extended Input Control Register (ADEXICR)

- Window A Channel Select Registers 0 and 1 (ADCMPANSR0 and ADCMPANSR1)
- Window A Extended Input Select Register (ADCMPANSER)

CMPBIE bit (Compare B Interrupt Enable)

The CMPBIE bit enables or disables the ADC120_CMPBI interrupt output when the comparison conditions (window B) are met.

WCMPE bit (Window Function Setting)

The WCMPE bit enables or disables the window function. Set the WCMPE bit while the ADCSR.ADST bit is 0.

CMPAIE bit (Compare A Interrupt Enable)

The CMPAIE bit enables or disables the ADC120_CMPAI interrupt output when the comparison conditions (window A) are met.

35.2.23 ADCMPANSR0 : A/D Compare Function Window A Channel Select Register 0

Base address: ADC120 = 0x4017_0000

Offset address: 0x094

Bit position:	15	14	13	12	11	10	9	8	7	6	5	4	3	2	1	0
Bit field:	CMPCHA15	CMPCHA14	CMPCHA13	CMPCHA12	CMPCHA11	CMPCHA10	CMPCHA9	CMPCHA8	CMPCHA7	CMPCHA6	CMPCHA5	CMPCHA4	CMPCHA3	CMPCHA2	CMPCHA1	CMPCHA0
Value after reset:	0	0	0	0	0	0	0	0	0	0	0	0	0	0	0	0

Bit	Symbol	Function	R/W
15:0	CMPCHA15 to CMPCHA0	Compare Window A Channel Select Bit 15 (CMPCHA15) is associated with AN015 and bit 0 (CMPCHA0) is associated with AN000. 0: Disable compare function for associated input channel 1: Enable compare function for associated input channel	R/W

Note: n = 00 to 06

Note: Bits associated with non-existent pins are reserved. This bit is read as 0. The write value should be 0.

CMPCHAn bits (Compare Window A Channel Select)

The compare function is enabled by writing 1 to the CMPCHAn bits with the same number as the A/D conversion channel selected in the ADANSA0.ANSAn bits and the ADANSB0.ANSBn bits.

Set the CMPCHAn bits while the ADCSR.ADST bit is 0.

35.2.24 ADCMPANSR1 : A/D Compare Function Window A Channel Select Register 1

Base address: ADC120 = 0x4017_0000

Offset address: 0x096

Bit position:	15	14	13	12	11	10	9	8	7	6	5	4	3	2	1	0
Bit field:	CMPCHA31	CMPCHA30	CMPCHA29	CMPCHA28	CMPCHA27	CMPCHA26	CMPCHA25	CMPCHA24	CMPCHA23	CMPCHA22	CMPCHA21	CMPCHA20	CMPCHA19	CMPCHA18	CMPCHA17	CMPCHA16
Value after reset:	0	0	0	0	0	0	0	0	0	0	0	0	0	0	0	0

Bit	Symbol	Function	R/W
15:0	CMPCHA31 to CMPCHA16	Compare Window A Channel Select Bit 15 (CMPCHA31) is associated with AN031 and bit 0 (CMPCHA16) is associated with AN016. 0: Disable compare function for associated input channel 1: Enable compare function for associated input channel	R/W

Note: n = 17 to 25

Note: Bits associated with non-existent pins are reserved. This bit is read as 0. The write value should be 0.

CMPCHAn bits (Compare Window A Channel Select)

The compare function is enabled by writing 1 to the CMPCHAn bits with the same number as the A/D conversion channel selected in the ADANSA1.ANSA bits and the ADANSB1.ANSB bits.

Set the CMPCHAn bits while the ADCSR.ADST bit is 0.

35.2.25 ADCMPANSER : A/D Compare Function Window A Extended Input Select Register

Base address: ADC120 = 0x4017_0000

Offset address: 0x092

Bit position:	7	6	5	4	3	2	1	0
Bit field:	—	—	—	—	—	—	CMPOCA	CMPTSA
Value after reset:	0	0	0	0	0	0	0	0

Bit	Symbol	Function	R/W
0	CMPTSA	Temperature Sensor Output Compare Select 0: Exclude the temperature sensor output from the compare Window A target range. 1: Include the temperature sensor output in the compare Window A target range.	R/W
1	CMPOCA	Internal Reference Voltage Compare Select 0: Exclude the internal reference voltage from the compare Window A target range. 1: Include the internal reference voltage in the compare Window A target range.	R/W
7:2	—	These bits are read as 0. The write value should be 0.	R/W

CMPTSA bit (Temperature Sensor Output Compare Select)

The compare window A function is enabled by setting the CMPTSA bit to 1 when the ADEXICR.TSSA bit is 1. Set the CMPTSA bit when the ADCSR.ADST bit is 0.

CMPOCA bit (Internal Reference Voltage Compare Select)

The compare window A function is enabled by setting the CMPOCA bit to 1 when the ADEXICR.OCSA bit is 1. Set the CMPOCA bit when the ADCSR.ADST bit is 0.

35.2.26 ADCMPLR0 : A/D Compare Function Window A Comparison Condition Setting Register 0

Base address: ADC120 = 0x4017_0000

Offset address: 0x098

Bit position:	15	14	13	12	11	10	9	8	7	6	5	4	3	2	1	0
Bit field:	CMPLCHA15	CMPLCHA14	CMPLCHA13	CMPLCHA12	CMPLCHA11	CMPLCHA10	CMPLCHA9	CMPLCHA8	CMPLCHA7	CMPLCHA6	CMPLCHA5	CMPLCHA4	CMPLCHA3	CMPLCHA2	CMPLCHA1	CMPLCHA0
Value after reset:	0	0	0	0	0	0	0	0	0	0	0	0	0	0	0	0

Bit	Symbol	Function	R/W
15:0	CMPLCHA15 to CMPLCHA0	Compare Window A Comparison Condition Select These bits set comparison conditions for channels to which Window A comparison conditions are applied. Bit 15 (CMPLCHA15) is associated with AN015 and bit 0 (CMPLCHA0) is associated with AN000. Comparison conditions are shown in Figure 35.3. 0: When window function is disabled (ADCMPCR.WCMPE = 0): ADCMPDR0 value > A/D-converted value When window function is enabled (ADCMPCR.WCMPE = 1): A/D-converted value < ADCMPDR0 value, or ADCMPDR1 value < A/D-converted value 1: When window function is disabled (ADCMPCR.WCMPE = 0): ADCMPDR0 value < A/D-converted value When window function is enabled (ADCMPCR.WCMPE = 1): ADCMPDR0 value < A/D-converted value < ADCMPDR1 value	R/W

Note: n = 00 to 06
Note: Bits associated with non-existent pins are reserved. This bit is read as 0. The write value should be 0.

CMPLCHAn bits (Compare Window A Comparison Condition Select)

The CMPLCHAn bits specify the comparison conditions for channels to which Window A comparison conditions are applied. These bits can be set for each analog input to be compared. When the comparison result of each analog input meets the set condition, the ADCMPSR0.CMPSTCHAn flag sets to 1 and a compare interrupt (ADC120_CMPAI) is generated.

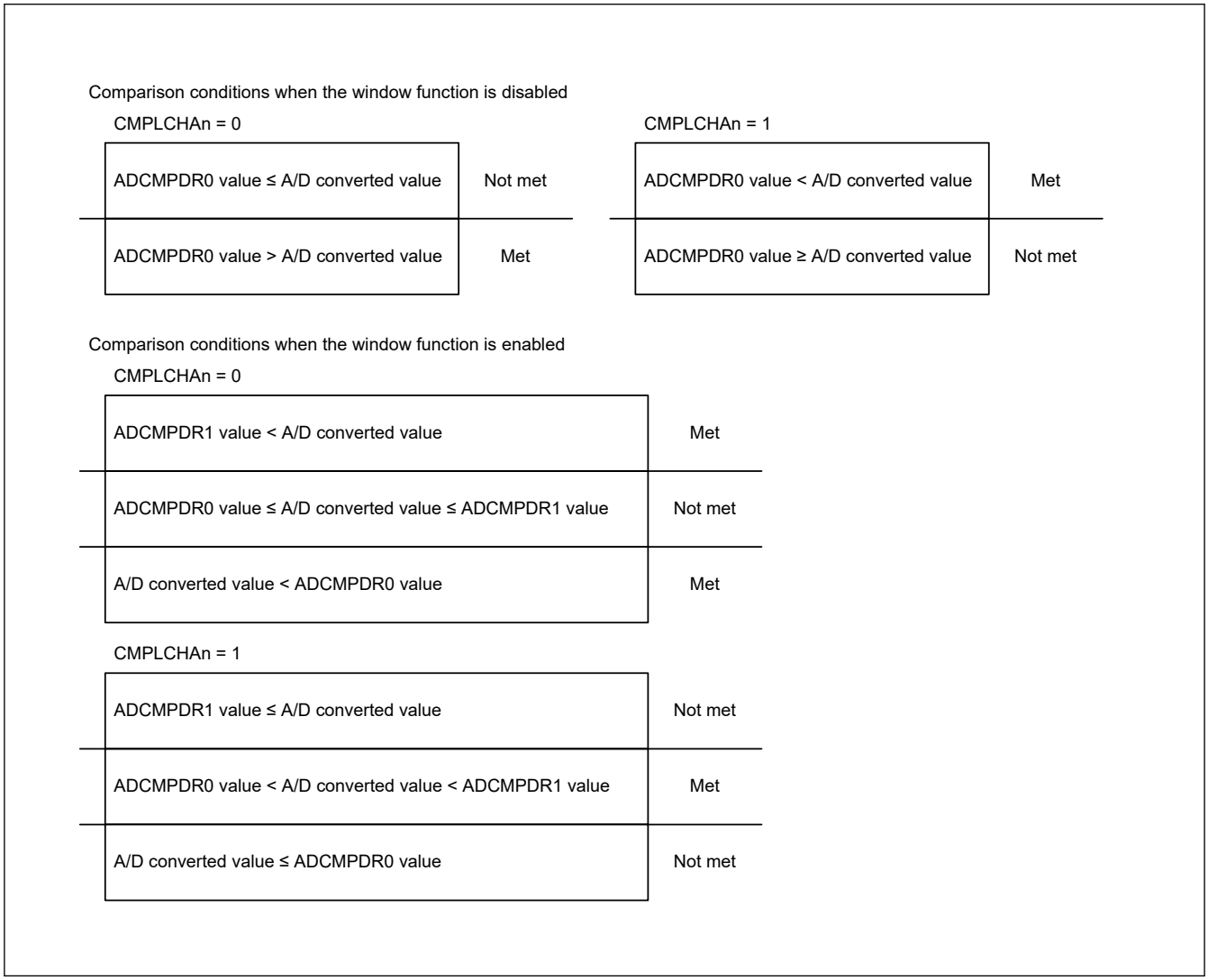

Figure 35.3 Explanation of comparison conditions for compare function Window A

35.2.27 ADCMPLR1 : A/D Compare Function Window A Comparison Condition Setting Register 1

Base address: ADC120 = 0x4017_0000

Offset address: 0x09A

Bit position:	15	14	13	12	11	10	9	8	7	6	5	4	3	2	1	0
Bit field:	CMPLCHA31	CMPLCHA30	CMPLCHA29	CMPLCHA28	CMPLCHA27	CMPLCHA26	CMPLCHA25	CMPLCHA24	CMPLCHA23	CMPLCHA22	CMPLCHA21	CMPLCHA20	CMPLCHA19	CMPLCHA18	CMPLCHA17	CMPLCHA16
Value after reset:	0	0	0	0	0	0	0	0	0	0	0	0	0	0	0	0

Bit	Symbol	Function	R/W
15:0	CMPLCHA31 to CMPLCHA16	Compare Window A Comparison Condition Select These bits set comparison conditions for channels to which Window A comparison conditions are applied. Bit 15 (CMPLCHA31) is associated with AN031 and bit 0 (CMPLCHA16) is associated with AN016. Comparison conditions are shown in Figure 35.3. 0: When window function is disabled (ADCMPCR.WCMPE = 0): ADCMPDR0 value > A/D-converted value When window function is enabled (ADCMPCR.WCMPE = 1): A/D-converted value < ADCMPDR0 value, or ADCMPDR1 value < A/D-converted value 1: When window function is disabled (ADCMPCR.WCMPE = 0): ADCMPDR0 value < A/D-converted value When window function is enabled (ADCMPCR.WCMPE = 1): ADCMPDR0 value < A/D-converted value < ADCMPDR1 value	R/W

Note: n = 17 to 25

Note: Bits associated with non-existent pins are reserved. This bit is read as 0. The write value should be 0.

CMPLCHAn bits (Compare Window A Comparison Condition Select)

The CMPLCHAn bits specify the comparison conditions for analog channels to which window A comparison conditions are applied. These bits can be set for each analog input to be compared. When the comparison result of each analog input meets the set condition, the ADCMPSR1.CMPSTCHAn bit is set to 1 and a compare interrupt (ADC120_CMPAI) is generated.

35.2.28 ADCMPLER : A/D Compare Function Window A Extended Input Comparison Condition Setting Register

Base address: ADC120 = 0x4017_0000

Offset address: 0x093

Bit position:	7	6	5	4	3	2	1	0
Bit field:	—	—	—	—	—	—	CMPLOCA	CMPLTSA
Value after reset:	0	0	0	0	0	0	0	0

Bit	Symbol	Function	R/W
0	CMPLTSA	Compare Window A Temperature Sensor Output Comparison Condition Select Comparison conditions are shown in Figure 35.3. 0: When window function is disabled (ADCMPCR.WCMPE = 0) : ADCMPDR0 value > A/D-converted value, Compare Window A Temperature Sensor Output Comparison Condition Select When window function is enabled (ADCMPCR.WCMPE = 1) : Compare Window A Temperature Sensor Output Comparison, Condition A/D-converted value < ADCMPDR0 value, or A/D-converted value > ADCMPDR1 value 1: When window function is disabled (ADCMPCR.WCMPE = 0) : ADCMPDR0 value < A/D-converted value When window function is enabled (ADCMPCR.WCMPE = 1) : ADCMPDR0 value < A/D-converted value < ADCMPDR1 value	R/W
1	CMPLOCA	Compare Window A Internal Reference Voltage Comparison Condition Select Comparison conditions are shown in Figure 35.3. 0: When window function is disabled (ADCMPCR.WCMPE = 0) : ADCMPDR0 value > A/D-converted value When window function is enabled (ADCMPCR.WCMPE = 1): A/D-converted value < ADCMPDR0 value, or A/D-converted value > ADCMPDR1 value 1: When window function is disabled (ADCMPCR.WCMPE = 0): ADCMPDR0 value < A/D-converted value When window function is enabled (ADCMPCR.WCMPE = 1): ADCMPDR0 value < A/D-converted value < ADCMPDR1 value	R/W
7:2	—	These bits are read as 0. The write value should be 0.	R/W

CMPLTSA bit (Compare Window A Temperature Sensor Output Comparison Condition Select)

The CMPLTSA bit specifies comparison conditions when the temperature sensor output is the target for the Window A comparison condition. When the temperature sensor output comparison result meets the set condition, the ADCMPSER.CMPSTTSA flag sets to 1 and a compare interrupt (ADC120_CMPAI) is generated.

CMPLOCA bit (Compare Window A Internal Reference Voltage Comparison Condition Select)

The CMPLOCA bit specifies comparison conditions when the internal reference voltage is the target for the Window A comparison condition. When the internal reference voltage comparison result meets the set condition, the ADCMPSER.CMPSTOCA flag sets to 1 and a compare interrupt (ADC120_CMPAI) is generated.

35.2.29 ADCMPDRn : A/D Compare Function Window A Lower-Side/Upper-Side Level Setting Register (n = 0, 1)

Base address: ADC120 = 0x4017_0000

Offset address: 0x09C + (0x2 × n)

Bit position:	15	14	13	12	11	10	9	8	7	6	5	4	3	2	1	0
Bit field:																
Value after reset:	0	0	0	0	0	0	0	0	0	0	0	0	0	0	0	0

The ADCMPDRy (y = 0, 1) register specifies the reference data when the compare window A function is used. ADCMPDR0 sets the lower reference for window A, and ADCMPDR1 sets the upper reference for window A.

ADCMPDRy are read/write registers.

ADCMPDRy are writable even during A/D conversion. The reference data can be dynamically changed by rewriting register values during A/D conversion[*1].

Set these registers so that the upper reference is not less than the lower reference (ADCMPDR1 ≥ ADCMPDR0). ADCMPDR1 are not used when the window function is disabled.

Note 1. The lower and the upper references are changed when each register is written. For example, when the upper reference value is changed and the lower reference value is being changed, the MCU compares the upper reference (after rewrite), and the lower reference (before rewrite) with the A/D conversion result. See Figure 35.4. If the comparison during the rewriting of these two references is erroneous, then rewrite these reference

values when both ADCSR.ADST and the target Compare Window Operation Enable bit (ADCMPCR.CMPAE or ADCMPCR.CMPBE) are 0.

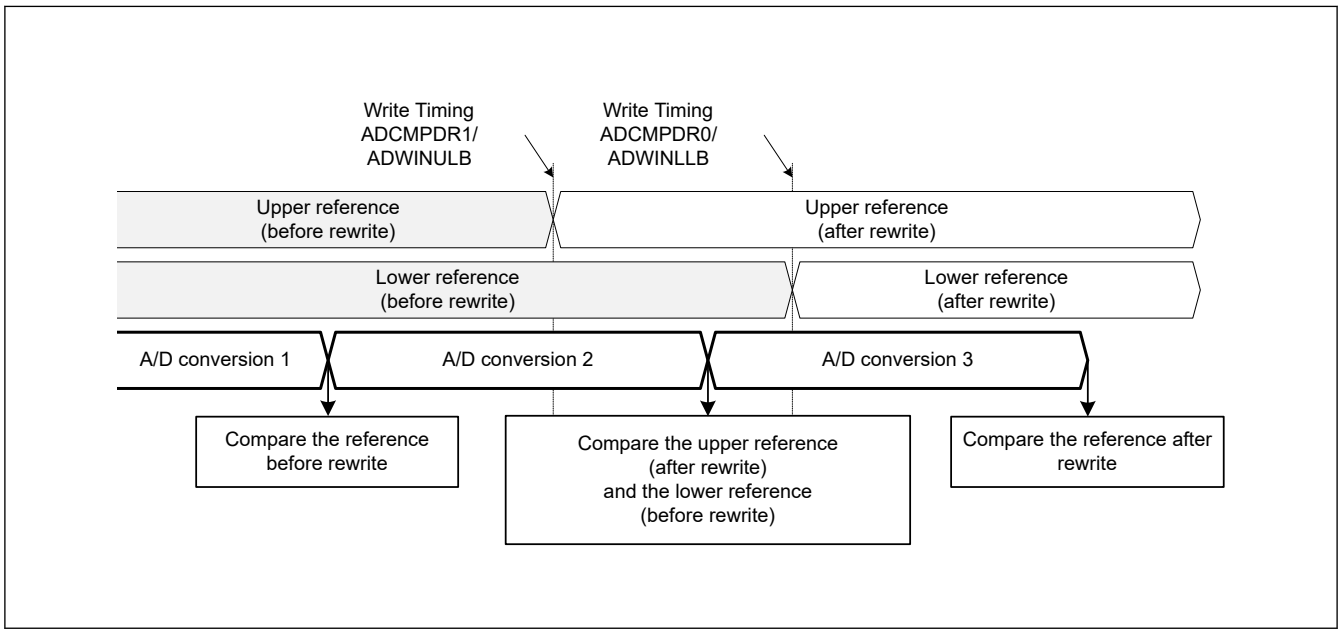

Figure 35.4 Comparison between upper and lower references before and after a rewrite

The ADCMPDRy registers use different formats depending on the following conditions:

- The value of A/D Data Register Format Select bit (flush-right or flush-left)
- The value of A/D-Converted Value Addition/Average Channel Select bits (A/D-converted value addition mode selected or not selected).

The data formats for each condition are shown as follows:

1. When A/D-converted value addition mode is not selected
   - Flush-right data with 12-bit accuracy — Lower 12 bits ([11:0]) are valid
   - Flush-left data with 12-bit accuracy — Upper 12 bits ([15:4]) are valid
2. When A/D-converted value addition mode is selected (other than 16-time conversion)
   - Flush-right data with 12-bit accuracy — Lower 14 bits ([13:0]) are valid
   - Flush-left data with 12-bit accuracy — Upper 14 bits ([15:2]) are valid
3. When A/D-converted value addition mode is selected (16-time conversion)
   - All bits ([15:0]) are valid

35.2.30 ADWINnLB : A/D Compare Function Window B Lower-Side/Upper-Side Level Setting Register (n = L, U)

Base address: ADC120 = 0x4017_0000

Offset address: 0x0A8 (n = L)
0x0AA (n = U)

Bit position:	15	14	13	12	11	10	9	8	7	6	5	4	3	2	1	0
Bit field:																
Value after reset:	0	0	0	0	0	0	0	0	0	0	0	0	0	0	0	0

The ADWINULB and ADWINLLB registers specify the reference data when the compare window B function is used. ADWINLLB sets the lower reference for window B, and ADWINULB sets the upper reference for window B.

ADWINnLB are read/write registers.

ADWINnLB are writable even during A/D conversion. The reference data can be dynamically changed by rewriting register values during A/D conversion*1.

Set these registers so that the upper reference is not less than the lower reference (ADWINULB ≥ ADWINLLB). ADWINULB are not used when the window function is disabled.

Note 1. The lower and the upper references are changed when each register is written. For example, when the upper reference value is changed and the lower reference value is being changed, the MCU compares the upper reference (after rewrite), and the lower reference (before rewrite) with the A/D conversion result. See Figure 35.5. If the comparison during the rewriting of these two references is erroneous, then rewrite these reference values when both ADCSR.ADST and the target Compare Window Operation Enable bit (ADCMPCR.CMPAE or ADCMPCR.CMPBE) are 0.

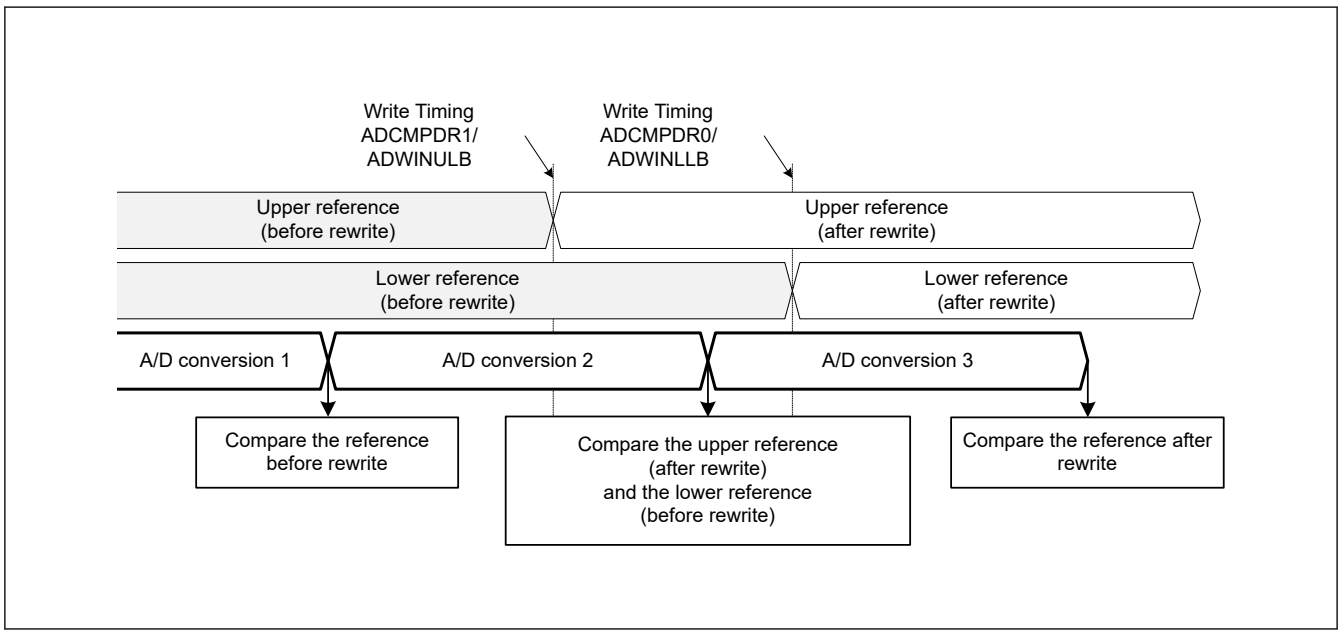

Figure 35.5 Comparison between upper and lower references before and after a rewrite

The ADWINnLB registers use different formats depending on the following conditions:

- The value of A/D Data Register Format Select bit (flush-right or flush-left)
- The value of A/D-Converted Value Addition/Average Channel Select bits (A/D-converted value addition mode selected or not selected).

The data formats for each condition are shown as follows:

1. When A/D-converted value addition mode is not selected
   - Flush-right data with 12-bit accuracy — Lower 12 bits ([11:0]) are valid
   - Flush-left data with 12-bit accuracy — Upper 12 bits ([15:4]) are valid
2. When A/D-converted value addition mode is selected (other than 16-time conversion)
   - Flush-right data with 12-bit accuracy — Lower 14 bits ([13:0]) are valid
   - Flush-left data with 12-bit accuracy — Upper 14 bits ([15:2]) are valid
3. When A/D-converted value addition mode is selected (16-time conversion)
   - All bits ([15:0]) are valid

35.2.31 ADCMPSR0 : A/D Compare Function Window A Channel Status Register 0

Base address: ADC120 = 0x4017_0000

Offset address: 0x0A0

Bit position:	15	14	13	12	11	10	9	8	7	6	5	4	3	2	1	0
Bit field:	CMPSTCHA15	CMPSTCHA14	CMPSTCHA13	CMPSTCHA12	CMPSTCHA11	CMPSTCHA10	CMPSTCHA9	CMPSTCHA8	CMPSTCHA7	CMPSTCHA6	CMPSTCHA5	CMPSTCHA4	CMPSTCHA3	CMPSTCHA2	CMPSTCHA1	CMPSTCHA0
Value after reset:	0	0	0	0	0	0	0	0	0	0	0	0	0	0	0	0

Bit	Symbol	Function	R/W
15:0	CMPSTCHA15 to CMPSTCHA0	Compare Window A Flag When Window A operation is enabled (ADCMPCR.CMPAE = 1b), these bits indicate the comparison result of channels to which Window A comparison conditions are applied. Bit 15 (CMPSTCHA15) is associated with AN015 and bit 0 (CMPSTCHA0) is associated with AN000. 0: Comparison conditions are not met. 1: Comparison conditions are met.	R/W

Note: n = 00 to 06

Note: Bits associated with non-existent pins are reserved. This bit is read as 0. The write value should be 0.

CMPSTCHAn flags (Compare Window A Flag)

The CMPSTCHAn flags indicate the comparison results for channels to which Window A comparison conditions are applied. When a comparison condition set in ADCMPLR0.CMPLCHA is met at the end of A/D conversion, the associated CMPSTCHAn flag sets to 1. When the ADCMPCR.CMPAIE bit is 1, a compare interrupt request (ADC120_CMPAI) is generated when this flag sets to 1.

Writing 1 to the CMPSTCHAn flags is invalid.

[Setting condition]

- The condition set in ADCMPLR0.CMPLCHA is met when ADCMPCR.CMPAE = 1.

[Clearing condition]

- Writing 0 after reading 1.

35.2.32 ADCMPSR1 : A/D Compare Function Window A Channel Status Register1

Base address: ADC120 = 0x4017_0000

Offset address: 0x0A2

Bit position:	15	14	13	12	11	10	9	8	7	6	5	4	3	2	1	0
Bit field:	CMPSTCHA31	CMPSTCHA30	CMPSTCHA29	CMPSTCHA28	CMPSTCHA27	CMPSTCHA26	CMPSTCHA25	CMPSTCHA24	CMPSTCHA23	CMPSTCHA22	CMPSTCHA21	CMPSTCHA20	CMPSTCHA19	CMPSTCHA18	CMPSTCHA17	CMPSTCHA16
Value after reset:	0	0	0	0	0	0	0	0	0	0	0	0	0	0	0	0

Bit	Symbol	Function	R/W
15:0	CMPSTCHA31 to CMPSTCHA16	Compare Window A Flag When Window A operation is enabled (ADCMPCR.CMPAE = 1), these bits indicate the comparison result of channels to which Window A comparison conditions are applied. Bit 15 (CMPSTCHA31) is associated with AN031 and bit 0 (CMPSTCHA16) is associated with AN016. 0: Comparison conditions are not met. 1: Comparison conditions are met.	R/W

Note: n = 17 to 25

Note: Bits associated with non-existent pins are reserved. This bit is read as 0. The write value should be 0.

CMPSTCHAn flags (Compare Window A Flag)

The CMPSTCHAn flags indicate the comparison results for channels to which Window A comparison conditions are applied. When the comparison condition set in ADCMPLR1.CMPLCHA is met at the end of A/D conversion, the associated CMPSTCHAn flag sets to 1. When the ADCMPCR.CMPAIE bit is 1, a compare interrupt request (ADC120_CMPAI) is generated when this flag sets to 1.

Writing 1 to the CMPSTCHAn flags is invalid.

[Setting condition]

- The condition set in ADCMPLR1.CMPLCHA is met when ADCMPCR.CMPAE = 1.

[Clearing condition]

- Writing 0 after reading 1.

35.2.33 ADCMPSER : A/D Compare Function Window A Extended Input Channel Status Register

Base address: ADC120 = 0x4017_0000

Offset address: 0x0A4

Bit position:	7	6	5	4	3	2	1	0
Bit field:	—	—	—	—	—	—	CMPS TOCA	CMPS TTSA
Value after reset:	0	0	0	0	0	0	0	0

Bit	Symbol	Function	R/W
0	CMPSTTSA	Compare Window A Temperature Sensor Output Compare Flag When Window A operation is enabled (ADCMPCR.CMPAE = 1), this bit indicates the temperature sensor output comparison result. 0: Comparison conditions are not met. 1: Comparison conditions are met.	R/W
1	CMPSTOCA	Compare Window A Internal Reference Voltage Compare Flag When Window A operation is enabled (ADCMPCR.CMPAE = 1), this bit indicates the internal reference voltage comparison result. 0: Comparison conditions are not met. 1: Comparison conditions are met.	R/W
7:2	—	These bits are read as 0. The write value should be 0.	R/W

The ADCMPSER register stores compare results of compare function window A.

CMPSTTSA flag (Compare Window A Temperature Sensor Output Compare Flag)

The CMPSTTSA flag indicates the temperature sensor output comparison result. When the comparison condition set in ADCMPLER.CMPLTSA is met at the end of A/D conversion, this flag sets to 1. When the ADCMPCR.CMPAIE bit is 1, a compare interrupt request (ADC120_CMPAI) is generated when this flag sets to 1.

Writing 1 to the CMPSTTSA flag is invalid.

[Setting condition]

- The condition set in ADCMPLER.CMPLTSA is met when ADCMPCR.CMPAE = 1.

[Clearing condition]

- Writing 0 after reading 1.

CMPSTOCA flag (Compare Window A Internal Reference Voltage Compare Flag)

The CMPSTOCA flag indicates the internal reference voltage comparison result. When the comparison condition set in ADCMPLER.CMPLOCA is met at the end of A/D conversion, this flag sets to 1. When the ADCMPCR.CMPAIE bit is 1, a compare interrupt request (ADC120_CMPAI) is generated when this flag sets to 1.

Writing 1 to the CMPSTOCA flag is invalid.

[Setting condition]

- The condition set in ADCMPLER.CMPLOCA is met when ADCMPCR.CMPAE = 1.

[Clearing condition]

- Writing 0 after reading 1.

35.2.34 ADCMPBNSR : A/D Compare Function Window B Channel Select Register

Base address: ADC120 = 0x4017_0000

Offset address: 0x0A6

Bit position:	7	6	5	4	3	2	1	0
Bit field:	CMPLB	—	CMPCHB[5:0]					
Value after reset:	0	0	0	0	0	0	0	0

Bit	Symbol	Function	R/W
5:0	CMPCHB[5:0]	Compare Window B Channel Select These bits select channels to be compared with the compare Window B conditions. **CMPCHB[5:0] / Channel** 0x00 / AN000 0x01 / AN001 0x02 / AN002 ⋮ / ⋮ 0x06 / AN006 0x11 / AN017 0x12 / AN018 0x13 / AN019 ⋮ / ⋮ 0x19 / AN025 0x20 / Temparature sensor 0x21 / Internal reference voltage 0x3F / No selection Others / Setting prohibited	R/W
6	—	This bit is read as 0. The write value should be 0.	R/W
7	CMPLB	Compare Window B Comparison Condition Setting This bit sets comparison conditions for channels for Window B. The comparison conditions are shown in Figure 35.6. 0: When window function is disabled (ADCMPCR.WCMPE = 0): ADWINLLB value > A/D-converted value When window function is enabled (ADCMPCR.WCMPE = 1): A/D-converted value < ADWINLLB value, or ADWINULB value < A/D-converted value 1: When window function is disabled (ADCMPCR.WCMPE = 0): ADWINLLB value < A/D-converted value When window function is enabled (ADCMPCR.WCMPE = 1): ADWINLLB value < A/D-converted value < ADWINULB value	R/W

CMPCHB[5:0] bits (Compare Window B Channel Select)

The CMPCHB[5:0] bits specify the channels to be compared with the compare Window B conditions from AN000 to AN006, AN017 to AN025, the temperature sensor, and the internal reference voltage. The compare Window B function is enabled by specifying the hexadecimal number of the A/D conversion channel selected in the ADANSA0, ADANSA1, ADANSB0, ADANSB1 registers.

Set the CMPCHB[5:0] bits while the ADCSR.ADST bit is 0.

CMPLB bit (Compare Window B Comparison Condition Setting)

The CMPLB bit specifies the comparison conditions for channels for Window B. When the comparison result of an analog input meets the set condition, the associated ADCMPBSR.CMPSTB flag sets to 1 and a compare interrupt request (ADC120_CMPBI) is generated.

Compare conditions when the window function is disabled

CMPLB = 0

ADWINLLB value ≤ A/D converted value	Not met
ADWINLLB value > A/D converted value	Met

CMPLB = 1

ADWINLLB value < A/D converted value	Met
ADWINLLB value ≥ A/D converted value	Not met

Compare conditions when the window function is enabled

CMPLB = 0

A/D converted value > ADWINULB value	Met
ADWINLLB value ≤ A/D converted value ≤ ADWINULB value	Not met
A/D converted value < ADWINLLB value	Met

CMPLB = 1

A/D converted value ≥ ADWINULB value	Not met
ADWINLLB value <A/D converted value < ADWINULB value	Met
A/D converted value ≤ ADWINLLB value	Not met

Figure 35.6 Explanation of compare conditions for compare function Window B

35.2.35 ADCMPBSR : A/D Compare Function Window B Status Register

Base address: ADC120 = 0x4017_0000

Offset address: 0x0AC

Bit position:	7	6	5	4	3	2	1	0
Bit field:	—	—	—	—	—	—	—	CMPSTB
Value after reset:	0	0	0	0	0	0	0	0

Bit	Symbol	Function	R/W
0	CMPSTB	Compare Window B Flag When Window B operation is enabled (ADCMPCR.CMPBE = 1), this bit indicates the comparison result of channels to which Window B comparison conditions are applied, temperature sensor output, and internal reference voltage. 0: Comparison conditions are not met. 1: Comparison conditions are met.	R/W
7:1	—	These bits are read as 0. The write value should be 0.	R/W

CMPSTB flag (Compare Window B Flag)

The CMPSTB flag indicates the comparison result of channels to which Window B comparison conditions are applied, the temperature sensor output, and internal reference voltage. When the comparison condition set in ADCMPBNSR.CMPLB is met at the end of A/D conversion, this flag sets to 1. When the ADCMPCR.CMPBIE bit is 1, a compare interrupt request (ADC120_CMPBI) is generated when this flag sets to 1.

Writing 1 to the CMPSTB flag is invalid.

[Setting condition]

- The condition set in ADCMPBNSR.CMPLB is met when ADCMPCR.CMPBE = 1.

[Clearing condition]

- Writing 0 after reading 1.

35.2.36 ADWINMON : A/D Compare Function Window A/B Status Monitor Register

Base address: ADC120 = 0x4017_0000

Offset address: 0x08C

Bit position:	7	6	5	4	3	2	1	0
Bit field:	—	—	MONCMPB	MONCMPA	—	—	—	MONCOMB
Value after reset:	0	0	0	0	0	0	0	0

Bit	Symbol	Function	R/W
0	MONCOMB	Combination Result Monitor This bit indicates the combination result. This bit is valid when both Window A and Window B operations are enabled. 0: Window A/B composite conditions are not met. 1: Window A/B composite conditions are met.	R
3:1	—	These bits are read as 0.	R
4	MONCMPA	Comparison Result Monitor A 0: Window A comparison conditions are not met. 1: Window A comparison conditions are met.	R
5	MONCMPB	Comparison Result Monitor B 0: Window B comparison conditions are not met. 1: Window B comparison conditions are met.	R
7:6	—	These bits are read as 0.	R

MONCOMB bit (Combination Result Monitor)

The read-only MONCOMB bit indicates the combined result of comparison condition results A and B based on the combination condition set in the ADCMPCR.CMPAB[1:0] bits.

[Setting condition]

- The combined result meets the combination condition set in the ADCMPCR.CMPAB[1:0] bits when ADCMPCR.CMPAE = 1 and ADCMPCR.CMPBE = 1.

[Clearing conditions]

- The combined result does not meet the combination condition set in the ADCMPCR.CMPAB[1:0] bits.
- ADCMPCR.CMPAE = 0 or ADCMPCR.CMPBE = 0.

MONCMPA bit (Comparison Result Monitor A)

The read-only MONCMPA bit is read as 1 when the A/D-converted value of the Window A target channel meets the condition set in ADCMPLR0/ADCMPLR1 and ADCMPLER. Otherwise, it is read as 0.

[Setting condition]

- The A/D-converted value meets the condition set in the ADCMPLR0/ADCMPLR1 and ADCMPLER registers when ADCMPCR.CMPAE = 1.

[Clearing conditions]

- The A/D-converted value does not meet the condition set in the ADCMPLR0/ADCMPLR1 and ADCMPLER registers when ADCMPCR.CMPAE = 1.
- ADCMPCR.CMPAE = 0 (automatically cleared when the ADCMPCR.CMPAE value changes from 1 to 0).

MONCMPB bit (Comparison Result Monitor B)

The read-only MONCMPB bit is read as 1 when the A/D-converted value of the Window B target channel meets the condition set in the ADCMPBNSR.CMPLB bit. Otherwise, it is read as 0.

[Setting condition]

- The A/D-converted value meets the condition set in ADCMPBNSR.CMPLB when ADCMPCR.CMPBE = 1.

[Clearing conditions]

- The A/D-converted value does not meet the condition set in ADCMPBNSR.CMPLB when ADCMPCR.CMPBE = 1.
- ADCMPCR.CMPBE = 0 (automatically cleared when the ADCMPCR.CMPBE value changes from 1 to 0).

35.2.37 ADHVREFCNT : A/D High-Potential/Low-Potential Reference Voltage Control Register

Base address: ADC120 = 0x4017_0000

Offset address: 0x08A

Bit position:	7	6	5	4	3	2	1	0
Bit field:	ADSLP	—	—	LVSEL	—	—	HVSEL[1:0]	
Value after reset:	0	0	0	0	0	0	0	0

Bit	Symbol	Function	R/W
1:0	HVSEL[1:0]	High-Potential Reference Voltage Select 0 0: AVCC0 is selected as the high-potential reference voltage 0 1: VREFH0 is selected as the high-potential reference voltage 1 0: Internal reference voltage is selected as the high-potential reference voltage 1 1: No reference voltage pin is selected (internal node discharge)	R/W
3:2	—	These bits are read as 0. The write value should be 0.	R/W
4	LVSEL	Low-Potential Reference Voltage Select 0: AVSS0 is selected as the low-potential reference voltage. 1: VREFL0 is selected as the low-potential reference voltage.	R/W
6:5	—	These bits are read as 0. The write value should be 0.	R/W
7	ADSLP	Sleep 0: Normal operation 1: Standby state	R/W

HVSEL[1:0] bits (High-Potential Reference Voltage Select)

The HVSEL[1:0] bits specify the high-potential reference voltage as VREFH0, AVCC0, or internal reference voltage.

When setting the register, make sure that HVSEL[1:0] = 11b is set.

Before selecting the internal reference voltage (HVSEL[1:0] = 10b), set HVSEL[1:0] = 11b to discharge the path of the high-potential reference voltage. After the discharge completes, set HVSEL[1:0] = 10b and start the A/D conversion.

When the internal reference voltage is selected as the high-potential reference voltage (HVSEL[1:0] = 10b), A/D conversion is possible for analog channels but A/D conversion of the internal reference voltage and the temperature sensor output is prohibited. When the internal reference voltage is selected as the high-potential reference voltage (HVSEL[1:0] = 10b), can only work in low-current mode (ADCSR.ADHSC = 1).

LVSEL bit (Low-Potential Reference Voltage Select)

The LVSEL bit specifies the low-potential reference voltage as AVSS0 or VREFL0.

ADSLP bit (Sleep)

The ADSLP bit transitions the A/D converter to the standby state. Set the ADSLP bit to 1 only when modifying the ADCSR.ADHSC bit. In other cases, setting the ADSLP bit to 1 is prohibited.

After the ADSLP bit is set to 1, wait at least 5 µs before setting this bit to 0. Additionally, after the ADSLP bit is set to 0, wait at least 1 µs, then start the A/D conversion.

For the ADHSC bit rewriting procedure, see section 35.8.9. ADHSC Bit Rewriting Procedure.

35.3 Operation

35.3.1 Scanning Operation

In scanning, A/D conversion is performed sequentially on the analog inputs of the specified channels.

Scan conversion is performed in any of the three operating modes and two conversion modes:

- Single scan mode
- Continuous scan mode
- Group scan mode
- High-speed A/D conversion mode (include fast/normal conversion mode selected by ADACSR.ADSAC)
- Low-power A/D conversion mode (include fast/normal conversion mode selected by ADACSR.ADSAC)

In single scan mode, one or more specified channels are scanned once. In continuous scan mode, one or more specified channels are scanned repeatedly until software sets the ADCSR.ADST bit to 0. In group scan mode, the selected channels in group A, B are scanned once after scan starts in response to the respective synchronous trigger.

In single scan mode and continuous scan mode, A/D conversion is performed for the ANn channels selected in the ADANSA0 and ADANSA1 registers, starting from the channel with the smallest number n. In group scan mode, A/D conversion is performed for the ANn channels in group A selected in the ADANSA0 and ADANSA1 registers, and for the ANn channels in group B selected in the ADANSB0 and ADANSB1 registers, starting from the channel with the smallest number n.

When self-diagnosis is selected, it is executed once at the beginning of each scan and one of the three reference voltages is converted.

It is prohibited to simultaneously select both temperature sensor output and internal reference voltage. If the internal reference voltage is selected as the reference voltage on the high potential side, A/D conversion of the temperature sensor or the internal reference voltage is also prohibited. When temperature sensor output or internal reference voltage is selected for A/D conversion, single scan mode should be used.

Double trigger mode can be used with single scan mode or group scan mode. With double trigger mode enabled (ADCSR.DBLE = 1), A/D conversion data of a channel selected in the ADCSR.DBLANS[4:0] bits is duplicated only if the conversion is started by the synchronous trigger (ELC) selected in the ADSTRGR.TRSA[5:0] bits. In group scan mode, only group A can use double trigger mode.

In the extended operation of double trigger mode, the A/D conversion operation is generated from the synchronous trigger combination selected in the ADSTRGR.TRSA[5:0] bits. In addition to normal double trigger mode operation, A/ D conversion data with odd number trigger (ELC_AD00) is stored in A/D Data Duplexing Register A (ADDBLDRA), and A/D conversion data with even number trigger (ELC_AD01) is stored in A/D Data Duplexing Register B (ADDBLDRB).

In the extended operation of double trigger mode, when one of the trigger combinations occurs at the same time, the data duplexing register settings for the specified triggers do not work, and A/D conversion data is stored in A/D Data Duplexing Register B (ADDBLDRB).

The ADC12 ignores a synchronous trigger that occurs during the A/D conversion started by another synchronous trigger.

35.3.2 Single Scan Mode

35.3.2.1 Basic Operation

In basic operation of single scan mode, A/D conversion is performed once on the analog input of the specified channels as follows:

1. When the ADCSR.ADST bit is set to 1 (A/D conversion start) by a software trigger, a synchronous trigger input (ELC), or an asynchronous trigger input, A/D conversion is performed for the ANn channels selected in the ADANSA0 and ADANSA1 registers, starting from the channel with the smallest number n.
2. Each time A/D conversion of a single channel is completed, the A/D conversion result is stored in the associated A/D data register (ADDRy and ADCTDR).
3. When A/D conversion of all the selected channels is completed, an ADC120_ADI interrupt request is generated.
4. The ADST bit remains 1 (A/D conversion start) during A/D conversion and is automatically set to 0 when A/D conversion of all the selected channels is completed. The ADC12 then enters a wait state.

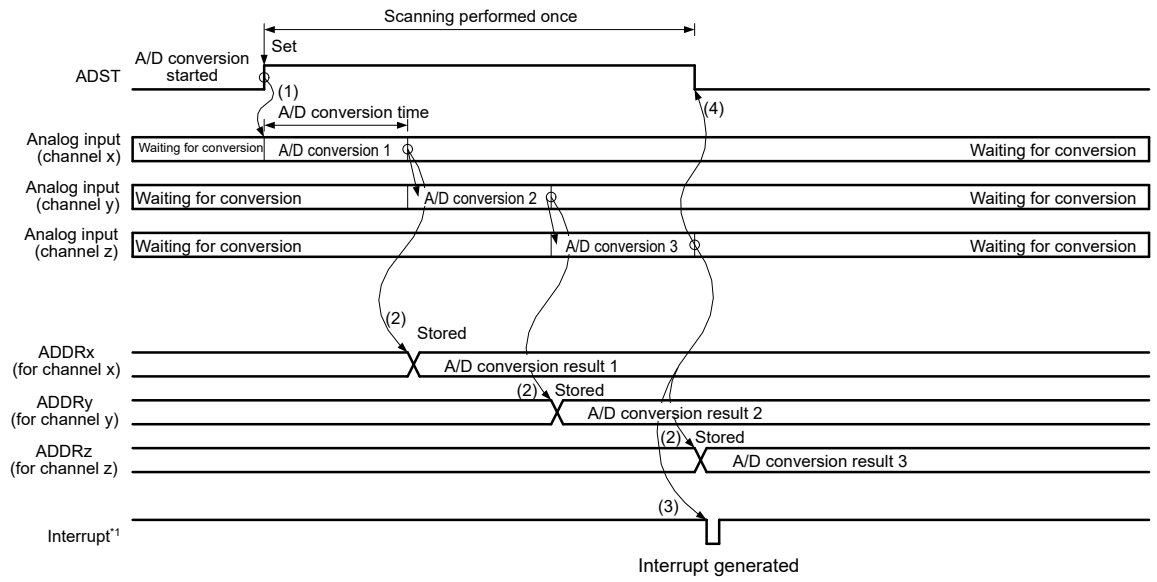

Note: x, y, and z (x < y < z) are the selected channel numbers by ADANSA0/1.
Note 1. ADC120_ADI

Figure 35.7 Example basic operation in single scan mode when the analog inputs (channel x to z) are selected

35.3.2.2 Channel Selection and Self-Diagnosis

When channels and self-diagnosis are selected, A/D conversion is first performed for the reference voltage (×0, ×1/2, or ×1), then A/D conversion is performed once on the analog input of the selected channels as follows:

1. A/D conversion for self-diagnosis is first started when the ADCSR.ADST bit is set to 1 (A/D conversion start) by a software trigger input, a synchronous trigger input (ELC), or an asynchronous trigger input.

2. When A/D conversion for self-diagnosis is completed, the A/D conversion result is stored in the A/D Self-Diagnosis Data Register (ADRD). A/D conversion is then performed for the ANn channels selected in the ADANSA0 and ADANSA1 registers, starting from the channel with the smallest number n.
3. Each time A/D conversion of a single channel is completed, the A/D conversion result is stored in the associated A/D data register (ADDRy and ADCTDR).
4. When A/D conversion of all the selected channels is completed, an ADC120_ADI interrupt request is generated.
5. The ADCSR.ADST bit remains 1 (A/D conversion start) during A/D conversion and is automatically set to 0 when A/D conversion of all the selected channels is completed. The ADC12 then enters a wait state.

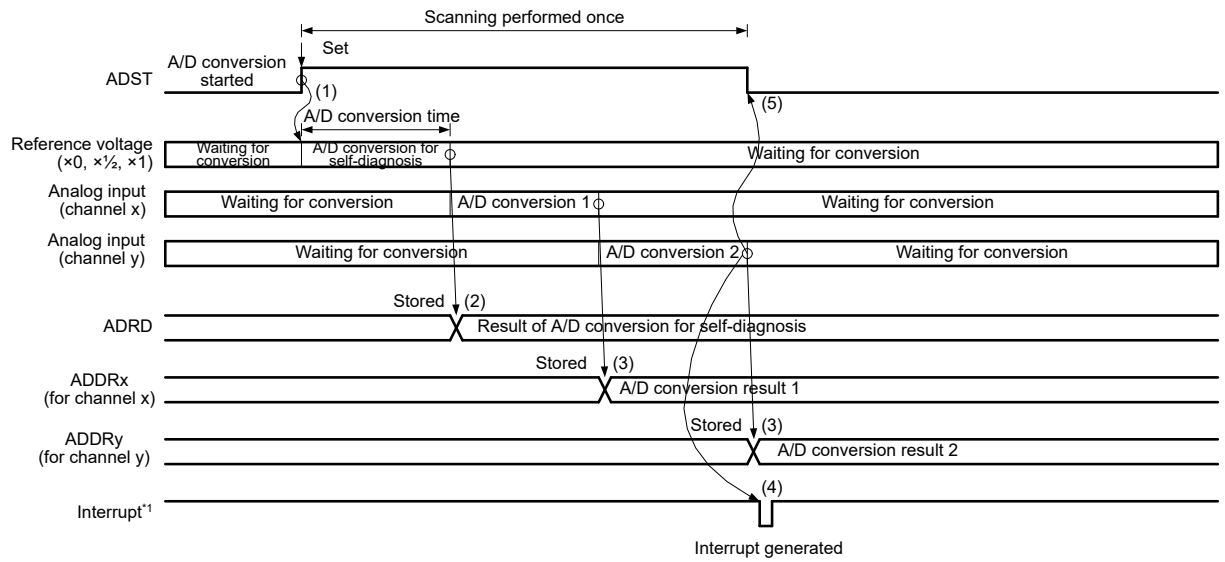

Note: x and y (x < y) are the selected channel numbers by ADANSA0/1.
Note 1. ADC120_ADI

Figure 35.8 Example basic operation in single scan mode when the analog inputs (channel x and y) are selected with self- diagnosis

35.3.2.3 A/D Conversion of Temperature Sensor Output or Internal Reference Voltage

A/D conversion is performed on the temperature sensor output or the internal reference voltage in single scan mode as described in this section.

When selecting A/D conversion of the temperature sensor output or the internal reference voltage, deselect all analog input channels by setting the ADANSA0 and ADANSA1 registers to all 0's and the ADCSR.DBLE bit to 0.

When selecting A/D conversion of temperature sensor output, set the internal reference voltage A/D conversion select bit (ADEXICR.OCSA) to 0 (deselected). When selecting A/D conversion of internal reference voltage, set the temperature sensor output A/D conversion select bit (ADEXICR.TSSA) to 0 (deselected).

The operation is as follows:

1. Set the sampling time to 5 µs or longer. Take note of the sampling state register settings (ADSSTRT/ADSSTRO) and ADCLK frequency.
2. After switching to A/D conversion of internal reference voltage or temperature sensor output, set the ADST bit to 1 to start conversion.
3. On completion of A/D conversion, the result is stored in the Temperature Sensor Data Register (ADTSDR) or A/D Internal Reference Voltage Data Register (ADOCDR), and an ADC120_ADI interrupt request is generated.
4. The ADST bit remains 1 during A/D conversion and is automatically set to 0 on completion of A/D conversion. The ADC12 then enters a wait state.

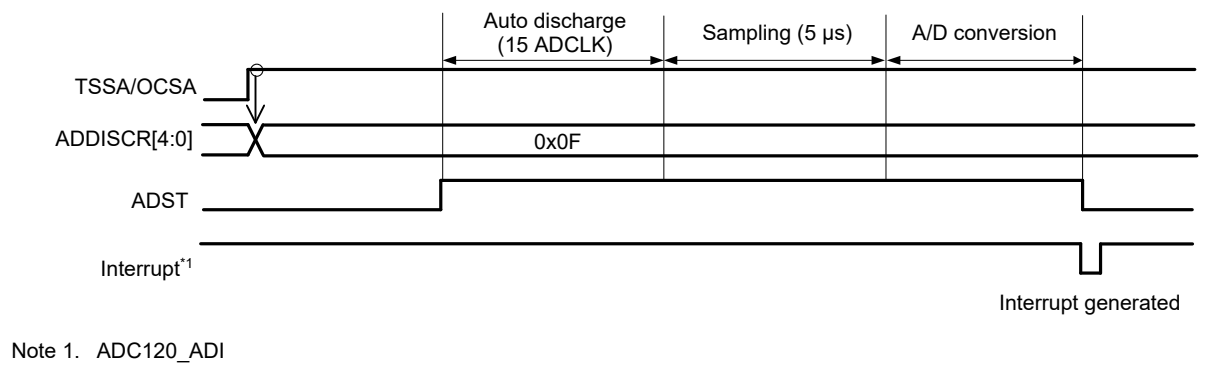

Note 1. ADC120_ADI

Figure 35.9 Example basic operation in single scan mode when temperature sensor output or internal reference voltage is selected

35.3.2.4 A/D Conversion in Double-Trigger Mode

When double trigger mode is selected in single scan mode, two rounds of single scan operation started by a synchronous trigger (ELC) are performed in sequence.

Deselect self-diagnosis and set the temperature sensor output A/D conversion select bit (ADEXICR.TSSA) and the internal reference voltage A/D conversion select bit (ADEXICR.OCSA) to 0.

Duplication of A/D conversion data is enabled by setting the channel numbers to be duplicated in the ADCSR.DBLANS[4:0] bits and setting the ADCSR.DBLE bit to 1. When the ADCSR.DBLE bit is set to 1, channel selection using the ADANSA0 and ADANSA1 registers is invalid.

In double trigger mode, select a synchronous trigger (ELC) with the ADSTRGR.TRSA[5:0] bits. Additionally, set the ADCSR.EXTRG bit to 0 and the ADCSR.TRGE bit to 1. Do not use a software trigger.

The operation is as follows:

1. When the ADCSR.ADST bit is set to 1 (A/D conversion start) by a synchronous trigger input (ELC), A/D conversion starts on the single channel selected in the ADCSR.DBLANS[4:0] bits.
2. Each time A/D conversion of a single channel is completed, the A/D conversion result is stored in the associated A/D Data Register y (ADDRy).
3. The ADCSR.ADST bit is automatically set to 0 and the ADC12 enters a wait state. An ADC120_ADI interrupt request is not generated.
4. When the ADCSR.ADST bit is set to 1 (A/D conversion start) by the second trigger input, A/D conversion starts on the single channel selected in the ADCSR.DBLANS[4:0] bits.
5. When A/D conversion is completed, the result is stored in the A/D Data Duplexing Register (ADDBLDR), which is exclusively used in double-trigger mode.
6. An ADC120_ADI interrupt request is generated.
7. The ADCSR.ADST bit remains 1 (A/D conversion start) during A/D conversion and is automatically set to 0 when A/D conversion is completed. Then the ADC12 enters a wait state.

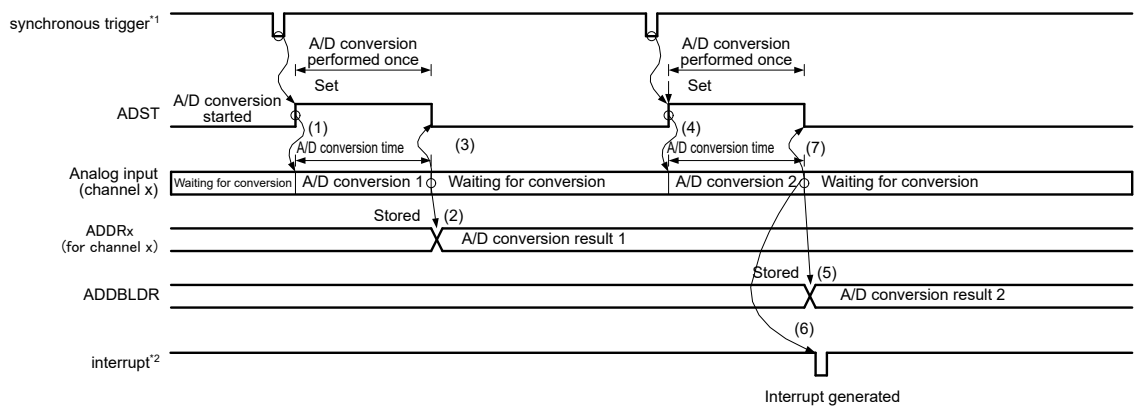

Note: x is the selected channel number by ADANSA0/1.
Note 1. ELC_AD00/ELC_AD01
Note 2. ADC120_ADI

Figure 35.10 Example operation in single scan mode when double-trigger mode is selected and the analog input (channel x) is duplicated

35.3.2.5 Extended Operations When Double-Trigger Mode Is Selected

When double trigger mode is selected in single scan mode, and a synchronous trigger (ELC_AD00/ELC_AD01) is selected as the trigger for the start of A/D conversion, two rounds of single scan operation are performed.

Deselect self-diagnosis and set the temperature sensor output A/D conversion select bit (ADEXICR.TSSA), and the internal reference voltage A/D conversion select bit (ADEXICR.OCSA) to 0.

Duplication of A/D conversion data is enabled by setting the channel number to be duplicated to the ADCSR.DBLANS[4:0] bits and setting the ADCSR.DBLE bit to 1. When the ADCSR.DBLE bit is set to 1, channel selection using the ADANSA0 and ADANSA1 registers is invalid.

In extended double trigger mode, select a synchronous trigger combination ELC_AD00/ELC_AD01 by setting the ADSTRGR.TRSA[5:0] bits to 0x0B, set the ADCSR.EXTRG bit to 0, and set the ADCSR.TRGE bit to 1. Do not use a software trigger.

The operation is as follows:

1. When the ADCSR.ADST bit is set to 1 (A/D conversion start) by a synchronous trigger input (ELC_AD00/ELC_AD01), A/D conversion starts on the single channel selected in the ADCSR.DBLANS[4:0] bits.
2. When A/D conversion completes, the A/D conversion result is stored in the associated A/D Data Register (ADDRy) and in A/D Data Duplexing Register A (ADDBLDRA) or A/D Data Duplexing Register B (ADDBLDRB) when the ELC_ADi0 or ELC_ADi1 trigger is input respectively (i = 0).
3. The ADCSR.ADST bit is automatically set to 0 and the ADC12 enters a wait state. An ADC120_ADI interrupt request is not generated.
4. When the ADCSR.ADST bit is set to 1 (A/D conversion start) by the second trigger (ELC_AD00/ELC_AD01), A/ D conversion starts on the single channel selected in the ADCSR.DBLANS[4:0] bits.
5. When A/D conversion completes, the A/D conversion result is stored in the A/D Data Duplexing Register (ADDBLDR) and in A/D Data Duplexing Register A (ADDBLDRA) or A/D Data Duplexing Register B (ADDBLDRB) when the ELC_ADi0 or ELC_ADi1 trigger is input respectively (i = 0).
6. An ADC120_ADI interrupt request is generated.
7. The ADCSR.ADST bit remains 1 (A/D conversion start) during A/D conversion and is automatically set to 0 when A/D conversion completes. The ADC12 then enters a wait state.

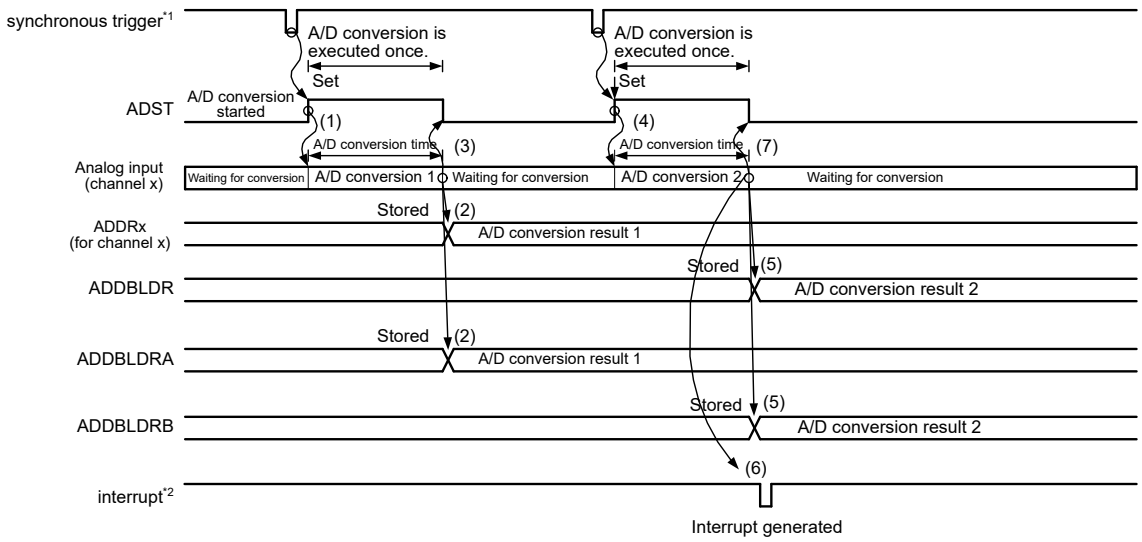

Note: x is the selected channel number by ADANSA0/1.
Note 1. ELC_AD00/ELC_AD01
Note 2. ADC120_ADI

Figure 35.11 Example extended operation in double trigger mode with duplication selected for the analog input (channel x) and ELC_AD00/ELC_AD01

35.3.3 Continuous Scan Mode

35.3.3.1 Basic Operation

In continuous scan mode, A/D conversion is performed repeatedly on the analog input of the specified channels. In this mode, deselect the temperature sensor output A/D conversion and the internal reference voltage A/D conversion by setting the ADEXICR.TSSA and ADEXICR.OCSA bits to 0.

The operation is as follows:

1. When the ADCSR.ADST bit is set to 1 (A/D conversion start) by a software trigger, a synchronous trigger input (ELC), or an asynchronous trigger input, A/D conversion is performed for ANn channels selected in the ADANSA0 and ADANSA1 registers, starting from the channel with the smallest number n.
2. Each time A/D conversion of a single channel is completed, the A/D conversion result is stored in the associated A/D Data Register (ADDRy).
3. When A/D conversion of all the selected channels is completed, an ADC120_ADI interrupt request is generated. The ADC12 sequentially starts A/D conversion for the ANn channels selected in the ADANSA0 and ADANSA1 registers, starting from the channel with the smallest number n.
4. The ADCSR.ADST bit is not automatically cleared, and steps 2. and 3. are repeated as long as ADCSR.ADST remains 1 (A/ D conversion start). When the ADCSR.ADST bit is set to 0 (A/D conversion stop), A/D conversion stops and the ADC12 enters a wait state.
5. When the ADCSR.ADST bit is later set to 1 (A/D conversion start), A/D conversion starts again for the ANn channels selected in the ADANSA0 and ADANSA1 registers, starting from the channel with the smallest number n.

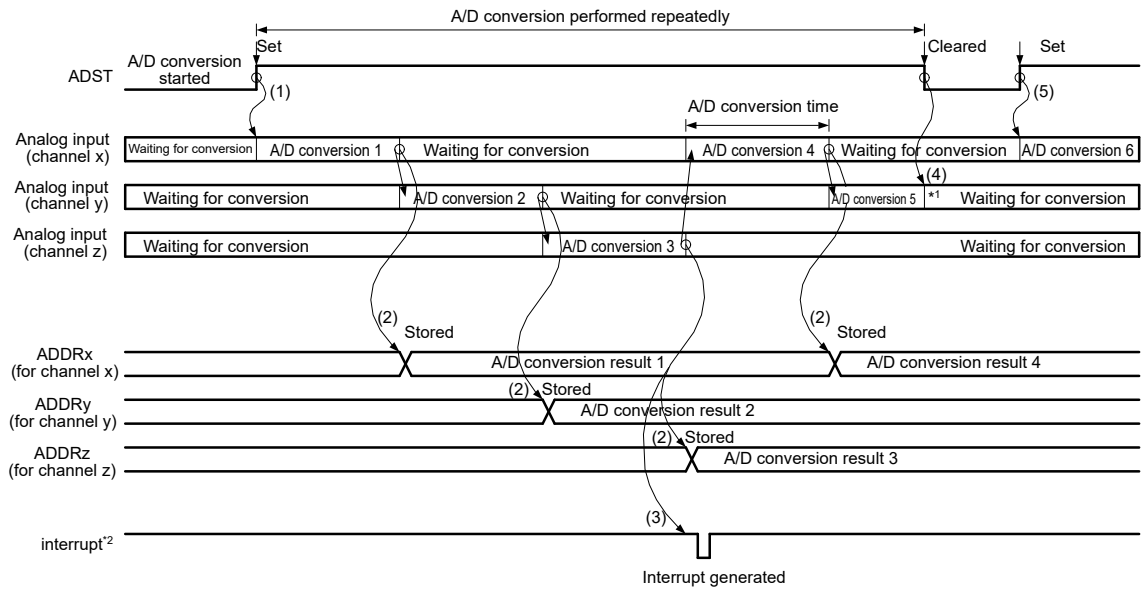

Note: x, y, and z (x < y < z) are the selected channel numbers by ADANSA0/1.
Note 1. Data for A/D conversion 5 is ignored.
Note 2. ADC120_ADI

Figure 35.12 Example basic operation in continuous scan mode when the analog inputs (channel x to z) are selected

35.3.3.2 Channel Selection and Self-Diagnosis

When channels and self-diagnosis are selected at the same time, A/D conversion is first performed for the reference voltage (×0, ×1/2, or ×1) supplied to the ADC12, and A/D conversion is performed on the analog input of the selected channels. This sequence is repeated as described in the section that follows.

In continuous scan mode, deselect the temperature sensor output A/D conversion and the internal reference voltage A/D conversion by setting the ADEXICR.TSSA and ADEXICR.OCSA bits to 0.

The operation is as follows:

1. A/D conversion for self-diagnosis is first started when the ADCSR.ADST bit is set to 1 (A/D conversion start) by a software trigger input, a synchronous trigger input (ELC), or an asynchronous trigger input.
2. When A/D conversion for self-diagnosis is completed, the A/D conversion result is stored in the A/D Self-Diagnosis Data Register (ADRD). A/D conversion is then performed for the ANn channels selected in the ADANSA0 and ADANSA1 registers, starting from the channel with the smallest number n.
3. Each time A/D conversion of a single channel is completed, the A/D conversion result is stored in the corresponding A/D Data Register (ADDRy).
4. When A/D conversion of all the selected channels is completed, an ADC120_ADI interrupt request is generated. At the same time, the ADC12 starts A/D conversion for self-diagnosis and then on the ANn channels selected in the ADANSA0 and ADANSA1 registers, starting from the channel with the smallest number n.
5. The ADCSR.ADST bit is not automatically cleared, and steps 2. to 4. are repeated as long as the ADCSR.ADST bit remains 1. When the ADST bit is set to 0 (A/D conversion stop), A/D conversion stops and the ADC12 enters a wait state.
6. When the ADST bit is later set to 1 (A/D conversion start), the A/D conversion for self-diagnosis is started again.

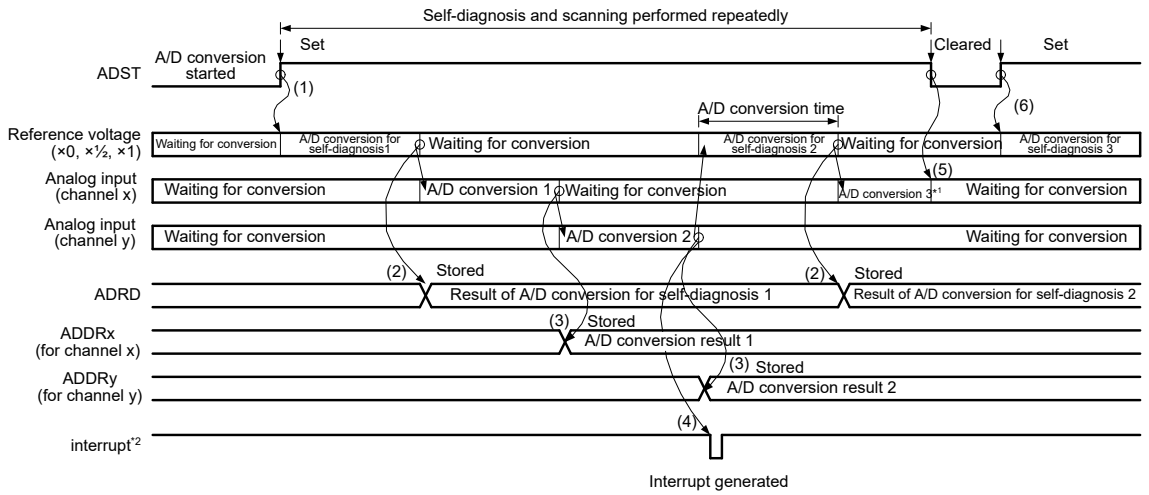

Note: x and y (x < y) are the selected channel numbers by ADANSA0/1.
Note 1. Data for A/D conversion 3 is ignored.
Note 2. ADC120_ADI

Figure 35.13 Example basic operation in continuous scan mode when the analog inputs (channel x and y) are selected with self-diagnosis

35.3.4 Group Scan Mode

35.3.4.1 Basic Operation

In group scan mode, A/D conversion is performed once on the analog input of all the specified channels in group A and B after scanning is started by a synchronous trigger (ELC). The scan operation of each group is similar to the scan operation in single scan mode.

The synchronous triggers can be selected in the ADSTRGR.TRSA[5:0] bits for group A and in the ADSTRGR.TRSB[5:0] bits for group B. Use different triggers for group A and B to prevent simultaneous A/D conversion of the two groups. Do not use a software trigger.

The group A channels to be A/D-converted are selected using the ADANSA0 and ADANSA1 registers. The group B channels to be A/D-converted are selected using the ADANSB0 and ADANSB1 registers. Group A and B cannot use the same channels.

In group scan mode, deselect the temperature sensor output A/D conversion and the internal reference voltage A/D conversion by setting the ADEXICR.TSSA and (ADEXICR.OCSA) bits to 0. When self-diagnosis is selected in group scan mode, self-diagnosis is separately executed for Group A and B.

The following sequence describes operation in group scan mode using a synchronous trigger from the ELC. In this example, the ELC_AD00 trigger from the ELC is used to start conversion of group A and the ELC_AD01 trigger from the ELC is used to start conversion of group B. In addition, ELC_AD00 and ELC_AD01 are selected for the GPT event in the associated ELC.ELSRn registers.

The operation is as follows:

1. Scanning of group A is started by ELC_AD00.
2. When group A scanning completes, an ADC120_ADI interrupt is generated (no register setting).
3. Scanning of group B is started by ELC_AD01.
4. When group B scanning completes, an ADC120_GBADI interrupt is generated if the ADCSR.GBADIE bit is 1 (ADC120_GBADI interrupt when scanning completion is enabled).

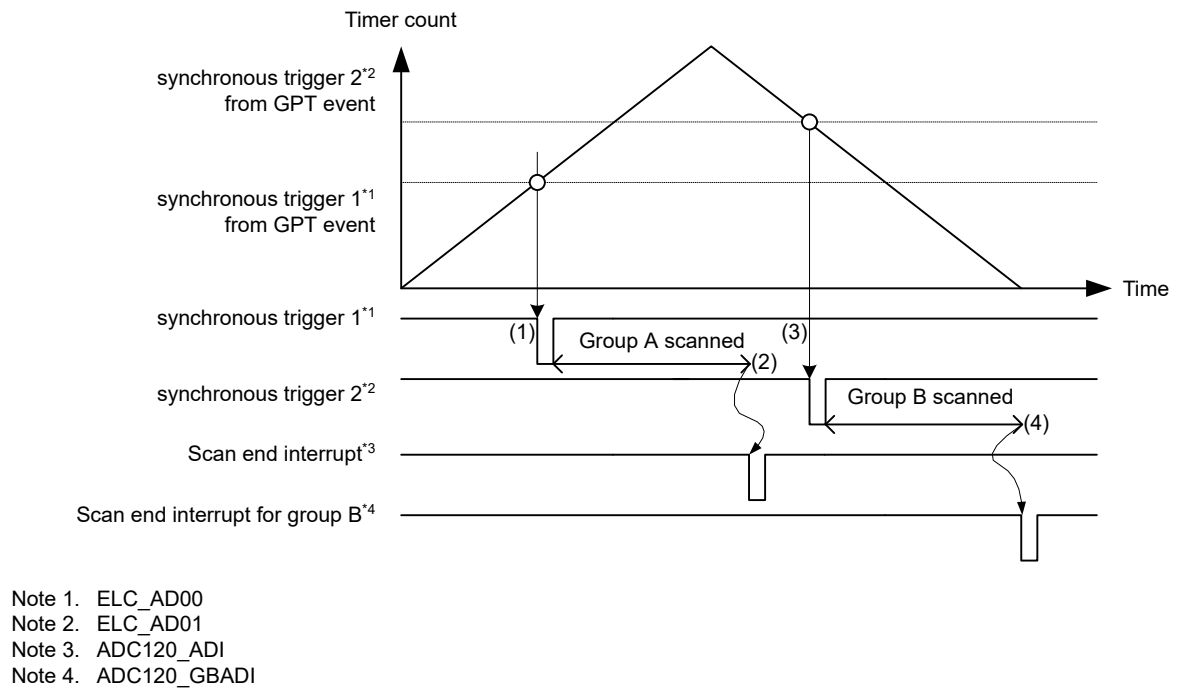

Note 1. ELC_AD00
Note 2. ELC_AD01
Note 3. ADC120_ADI
Note 4. ADC120_GBADI

Figure 35.14 Example basic operation in group scan mode when synchronous triggers from the ELC are used

35.3.4.2 A/D Conversion in Double-Trigger Mode

When double trigger mode is selected in group scan mode, two rounds of single scan operation started by a synchronous trigger (ELC) are performed as a sequence for group A. For group B, single scan operation started by a synchronous trigger (ELC) is performed once.

In group scan mode, the synchronous trigger can be selected in the ADSTRGR.TRSA[5:0] bits for group A and in the ADSTRGR.TRSB[5:0] bits for group B. Use different triggers for groupA, B to prevent simultaneous A/D conversion of the two groups. Do not use a software trigger or an asynchronous trigger.

When an ELC_AD00/ELC_AD01 is selected as group A synchronous triggers by setting the ADSTRGR.TRSA[5:0] bits to 0x0B, operation proceeds in extended double trigger mode.

The group A channel to be A/D-converted is selected using the DBLANS[4:0] bits in the ADCSR register, while the group B channels to be A/D-converted are selected using the ADANSB0 and ADANSB1 registers. Group A, B cannot use the same channels.

In group scan mode, deselect the temperature sensor output A/D conversion and the internal reference voltage A/D conversion by setting the ADEXICR.TSSA and ADEXICR.OCSA bits to 0.

Self-diagnosis cannot be selected when double trigger mode is selected in group scan mode.

Duplication of A/D conversion data is enabled by setting the channel numbers to be duplicated in the ADCSR.DBLANS[4:0] bits and setting the ADCSR.DBLE bit to 1.

The following sequence describes operation in group scan mode with double trigger mode selected and using a synchronous trigger from the ELC. In this example, the ELC_AD00 trigger is used to start conversion of group A and the ELC_AD01 trigger is used to start conversion of group B. In addition, ELC_AD00 and ELC_AD01 are selected for the GPT event in the associated ELC.ELSRn registers.

The operation is as follows:

1. Scanning of group B is started by the ELC_AD00 trigger from the ELC.
2. When group B scanning completes, an ADC120_GBADI interrupt is generated if the GBADIE bit in ADCSR is 1 (ADC120_GBADI interrupt when scanning completion is enabled).
3. The first scan of group A is started by the first ELC_AD01 trigger.

4. When the first scan of group A completes, the conversion result is stored in the associated A/D Data Register y (ADDRy); an ADC120_ADI interrupt request is not generated.
5. The second scan of group A is started by the second ELC_AD01 trigger.
6. When the second scan of group A completes, the conversion result is stored in ADDBLDR. An ADC120_ADI interrupt is generated.

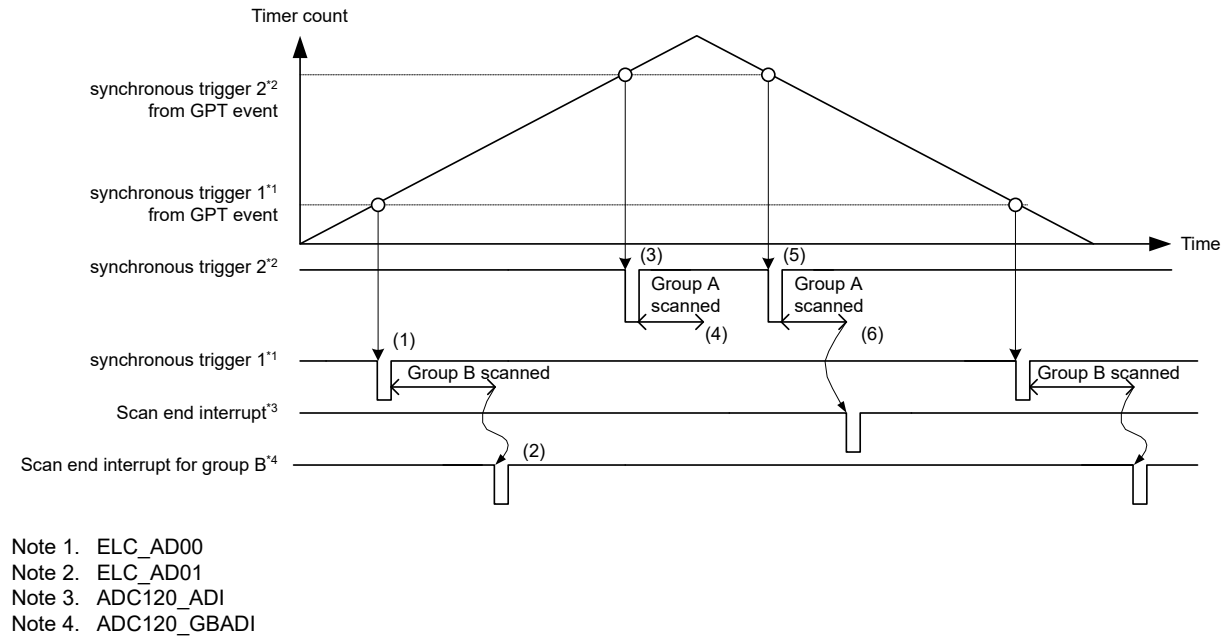

Note 1. ELC_AD00
Note 2. ELC_AD01
Note 3. ADC120_ADI
Note 4. ADC120_GBADI

Figure 35.15 Example basic operation in group scan mode with double-trigger mode when synchronous triggers from the ELC are used

35.3.4.3 Group Priority Operation

Group priority operation is performed by setting the ADGSPCR.PGS bit to 1 in group-scan mode. The priority of groups is group A > group B.

When setting the PGS bit in the ADGSPCR register to 1, follow the procedure described in Figure 35.16. If the procedure is not followed, A/D conversion operation and stored data are not guaranteed.

As the basic operation in group-scan mode, a trigger input generated during A/D conversion of group A, B is ignored, and the A/D conversion operation of each group is similar to the operation in single-scan mode.

In group priority operation, if a trigger for a priority group is input during scanning of a lower-priority group, A/D conversion for the lower-priority group is stopped and A/D conversion for the priority group is performed.

If the setting of the ADGSPCR.GBRSCN bit is 0, the lower-priority group enters a wait state when A/D conversion for the priority group completes. A trigger input of the lower-priority group generated during A/D conversion is ignored.

If the setting of the ADGSPCR.GBRSCN bit is 1, A/D conversion for the lower-priority group automatically restarts upon completion of A/D conversion for the priority group. A trigger input of the lower-priority group generated during A/D conversion on the priority group takes effect, and A/D conversion for the lower-priority group is automatically performed upon completion of A/D conversion on the priority group.

Table 35.22 summarizes operations in response to the input of a trigger during A/D conversion with the settings of the ADGSPCR.GBRSCN bit.

If the setting of the ADGSPCR.GBRP bit is 1, A/D conversion operation for the lowest-priority group is to continuously perform single scans.

For the trigger settings in group-scan mode, select a synchronous trigger for group A by using the ADSTRGR.TRSA[5:0] bits, a synchronous trigger for group B by using the ADSTRGR.TRSB[5:0] bits. Each trigger must be different from each other. Set the ADSTRGR.TRSB[5:0] bits to 0x3F when setting the ADGSPCR.GBRP bit to 1.

The channels to be scanned must be selected in the registers shown in section 35.3.4. Group Scan Mode.

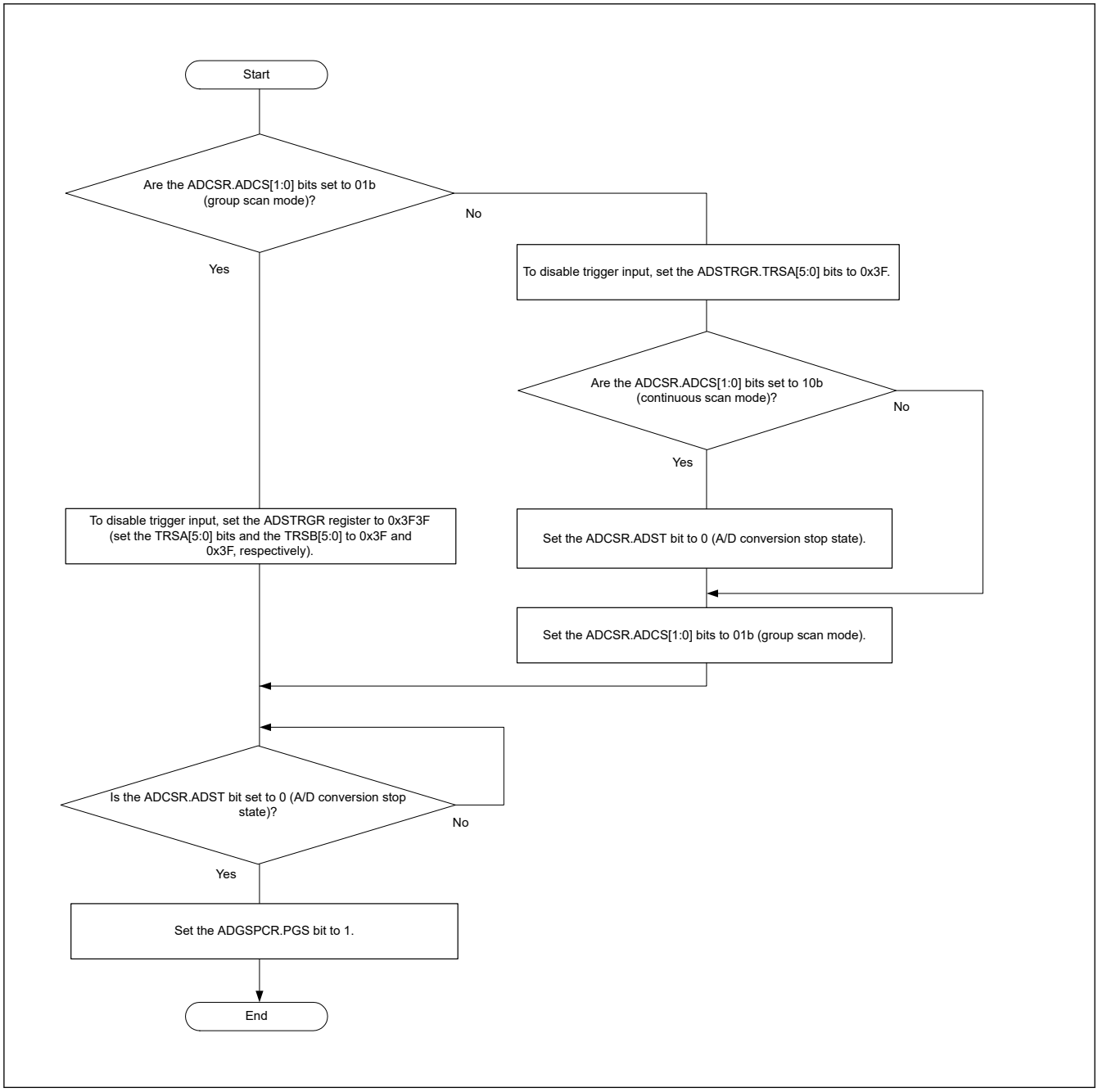

Figure 35.16 Flowchart for ADGSPCR.PGS bit setting

Table 35.22 Control of A/D conversion operations according to ADGSPCR.GBRSCN bit setting (1 of 2)

A/D conversion operation	Trigger input	ADGSPCR.GBRSCN = 0	ADGSPCR.GBRSCN = 1
When A/D conversion for group A is in progress	Input of trigger for group A	Trigger input is ineffective.	Trigger input is ineffective.
	Input of trigger for group B	Trigger input is ineffective.	A/D conversion for group B is performed after A/D conversion for group A completes.

Table 35.22 Control of A/D conversion operations according to ADGSPCR.GBRSCN bit setting (2 of 2)

A/D conversion operation	Trigger input	ADGSPCR.GBRSCN = 0	ADGSPCR.GBRSCN = 1
When A/D conversion for group B is in progress	Input of trigger for group A	A/D conversion for group B is discontinued and A/D conversion for group A starts.	● A/D conversion for group B is discontinued and A/D conversion for group A starts. ● A/D conversion for group B starts after A/D conversion for group A completes.
	Input of trigger for group B	Trigger input is ineffective.	Trigger input is ineffective.

(1) Group priority operation for two groups (when ADGSPCR.PGS = 1)

Operation examples 1-1 to 1-3 show group priority operations in group-scan mode (when ADGSPCR.GBRSCN = 1, ADGSPCR.GBRP = 0).

Operation example 1-1: “Group A trigger input during group B scan” when rescanning is enabled

1. When input of a trigger for group B sets the ADCSR.ADST bit to 1 (starting A/D conversion), A/D conversion for the analog input channels selected in the ADANSB0 and ADANSB1 registers starts according to the conversion order from the channel with the smallest number n.
2. On completion of A/D conversion for each channel in group B, the result is stored in the corresponding A/D Data Register y (ADDRy).
3. When a trigger for group A is input during A/D conversion for group B, A/D conversion for group B stops while the ADCSR.ADST bit remains 1. Then A/D conversion for the group A analog input channels selected in the ADANSA0 and ADANSA1 registers starts according to the conversion order from the channel with the smallest number n. If A/D conversion stops before it is completed, the conversion result is not stored in the A/D Data Register y (ADDRy).
4. On completion of A/D conversion on the channels, the result is stored in the corresponding A/D Data Register y (ADDRy).
5. An ADC120_ADI interrupt request is generated.
6. If the setting of the ADGSPCR.GBRSCN bit is 1 (enabling rescanning of the group that was stopped in group priority operation), A/D conversion for the group B analog input channels selected in the ADANSB0 and ADANSB1 registers restarts according to the conversion order from the channel with the smallest number n while the ADCSR.ADST remains 1.
7. On completion of A/D conversion on the channels, the result is stored in the corresponding A/D Data Register y (ADDRy).
8. If the setting of the ADCSR.GBADIE bit is 1 (enabling interrupt generation on completion of group B scan), a group B scan end interrupt request is generated.
9. When A/D conversion for all the channels completes, the ADCSR.ADST bit is automatically cleared and the A/D converter enters a wait state.

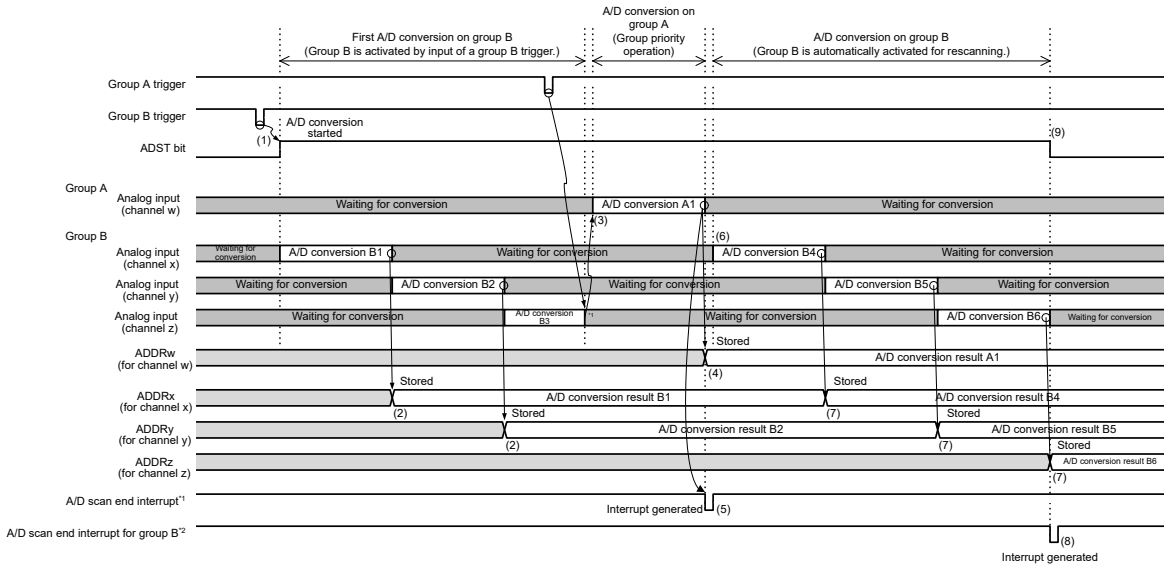

Note: w, x, y, and z (x < y < z) are the selected channel numbers by ADANSA0/1 or ADANSB0/1 .
Note 1. ADC120_ADI
Note 2. ADC120_GBADI

Figure 35.17 Example of group priority operation 1-1: Group A trigger input during group B scanning when rescanning is enabled (when ADGSPCR.GBRSCN = 1, ADGSPCR.GBRP = 0)

Operation example 1-2: “Group A trigger input during rescanning of group B” when rescanning is enabled

Figure 35.18 shows the operation when a group A trigger is input during rescanning operation for group B.

Even during rescanning operation, when a trigger for group A is input, A/D conversion on group B stops and A/D conversion for group A starts. A/D conversion for group B starts after A/D conversion for group A completes.

Operations for setting the ADCSR.ADST bit, storing the A/D conversion result in the corresponding A/D Data Register y (ADDRy), and generating interrupt requests are the same as those in operation example 1-1.

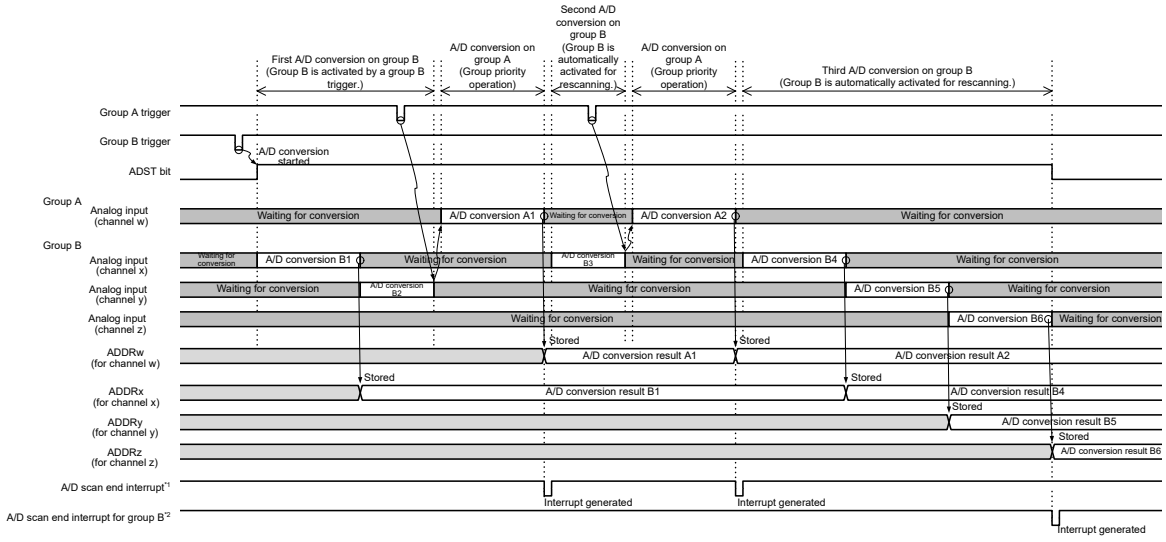

Note: w, x, y, and z (x < y < z) are the selected channel numbers by ADANSA0/1 or ADANSB0/1.
Note 1. ADC120_ADI
Note 2. ADC120_GBADI

Figure 35.18 Example of group priority operation 1-2: Group A trigger input during rescanning of group B when rescanning is enabled (when ADGSPCR.GBRSCN = 1, ADGSPCR.GBRP = 0)

Operation example 1-3: “Group B trigger input during group A scan” when rescanning is enabled

The following describes the operation when the setting of the ADGSPCR.GBRSCN bit is 1 (enabling rescanning of the group that was stopped in group priority operation) and a trigger for group B is input during scanning operation for group A.

If the setting of the ADGSPCR.GBRSCN bit is 0, any trigger for group B that is input during scanning operation for group A is invalid.

1. When input of a trigger for group A sets the ADCSR.ADST bit to 1 (starting A/D conversion), A/D conversion for the group A analog input channels selected in the ADANSA0 and ADANSA1 registers starts according to the conversion order from the channel with the smallest number n.
2. When a trigger for group B is input during A/D conversion for group A, group B is ready for A/D conversion.
3. On completion of A/D conversion for each channel in group A, the result is stored in the corresponding A/D Data Register y (ADDRy).
4. An ADC120_ADI interrupt request is generated.
5. When A/D conversion for group A completes, while the ADCSR.ADST bit remains 1, A/D conversion for the group B analog input channels selected in the ADANSB0 and ADANSB1 registers starts according to the conversion order from the channel with the smallest number n.
   (As with the case of operation example 1-1, if a trigger for group A is input during A/D conversion for group B, A/D conversion for group A starts. Then A/D conversion for group B starts upon completion of A/D conversion for group A.)
6. On completion of A/D conversion of a single channel, the result is stored in the corresponding A/D Data Register y (ADDRy).
7. Upon completion of A/D conversion for group B, a group B scan end interrupt request is generated if the setting of the ADCSR.GBADIE bit is 1 (enabling interrupt generation on completion of group B scan).
8. When A/D conversion for all the channels completes, the ADCSR.ADST bit is automatically cleared and the A/D converter enters a wait state.

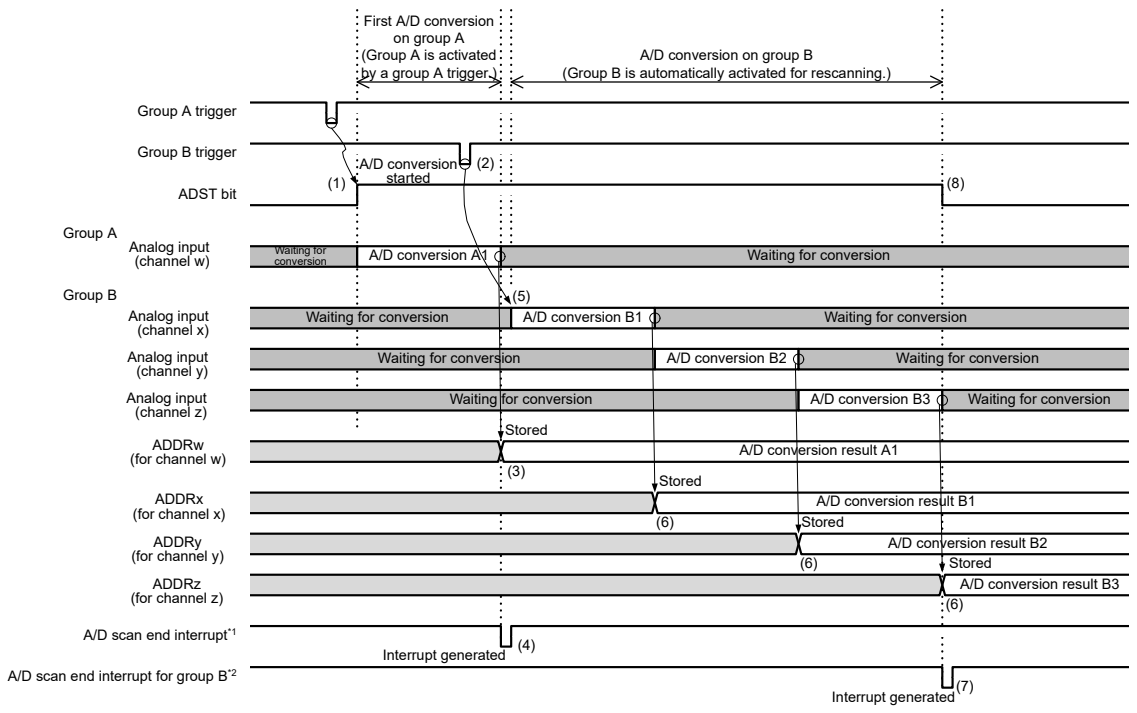

Note: w, x, y, and z (x < y < z) are the selected channel numbers by ADANSA0/1 or ADANSB0/1.
Note 1. ADC120_ADI
Note 2. ADC120_GBADI

Figure 35.19 Example of group priority operation 1-3: Group B trigger input during group A scan when rescanning is enabled (when ADGSPCR.GBRSCN = 1, ADGSPCR.GBRP = 0)

Operation example 1-4 shows the group priority operation in group-scan mode (when ADGSPCR.GBRSCN = 0, ADGSPCR.GBRP = 0).

Operation example 1-4: “Group A trigger input during group B scan” when rescanning is disabled

1. When input of a trigger for group B sets the ADCSR.ADST bit to 1 (starting A/D conversion), A/D conversion for the analog input channels selected in the ADANSB0 and ADANSB1 registers starts according to the conversion order from the channel with the smallest number n.
2. On completion of A/D conversion for each channel in group B, the result is stored in the corresponding A/D Data Register y (ADDRy).
3. When a trigger for group A is input during A/D conversion for group B, A/D conversion for group B stops while the ADCSR.ADST bit remains 1, and then A/D conversion for the group A analog input channels selected in the ADANSA0 and ADANSA1 registers starts according to the conversion order from the channel with the smallest number n. If A/D conversion stops before it is completed, the conversion result is not stored in the A/D Data Register y (ADDRy).
4. On completion of A/D conversion of a single channel, the result is stored in the corresponding A/D Data Register y (ADDRy).
5. On completion of A/D conversion for group A, an ADC120_ADI interrupt request is generated.
6. When A/D conversion for group A completes, the ADCSR.ADST bit is automatically cleared and the A/D converter enters a wait state. A/D conversion for group B is not performed until a trigger for group B is input the next time.

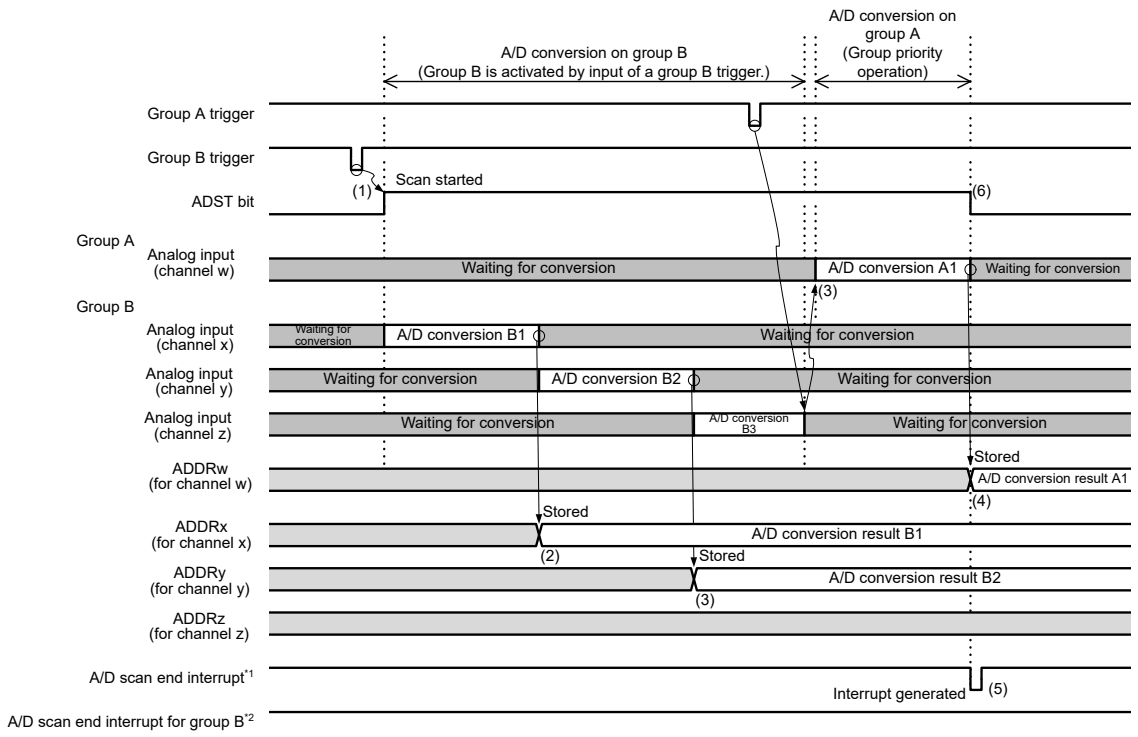

Note: w, x, y, and z (x < y < z) are the selected channel numbers by ADANSA0/1 or ADANSB0/1.
Note 1. ADC120_ADI
Note 2. ADC120_GBADI

Figure 35.20 Group priority operation example 1-4: "Group A trigger is input during group B scan" when rescanning is disabled (when ADGSPCR.GBRSCN = 0, ADGSPCR.GBRP = 0)

Operation example 1-5 shows the group priority operation in group-scan mode (when ADGSPCR.GBRP = 1).

Operation example 1-5: Continuously activating single-scan operation for group B

1. When ADGSPCR.GBRP = 1 is set, the ADCSR.ADST bit is set to 1 (starting A/D conversion) and A/D conversion for the analog input channels selected in the ADANSB0 and ADANSB1 registers starts according to the conversion order from the channel with the smallest number n.
2. On completion of A/D conversion for each channel in group B, the result is stored in the corresponding A/D Data Register y (ADDRy).
3. When a trigger for group A is input during A/D conversion for group B, A/D conversion for group B stops while the ADCSR.ADST bit remains 1, and then A/D conversion for group A analog input channels selected in the ADANSA0 and ADANSA1 registers starts according to the conversion order from the channel with the smallest number n. If A/D conversion stops before it is completed, the conversion result is not stored in the A/D Data Register y (ADDRy).
4. On completion of A/D conversion of a single channel, the result is stored in the corresponding A/D Data Register y (ADDRy).
5. On completion of A/D conversion for group A, an ADC120_ADI interrupt request is generated.
6. If ADGSPCR.GBRP = 1 is set (performing single scan continuously), A/D conversion for the group B analog input channels selected in the ADANSB0 and ADANSB1 registers restarts according to the conversion order from the channel with the smallest number n while the ADCSR.ADST remains 1 (starting A/D conversion).
7. On completion of A/D conversion of a single channel, the result is stored in the corresponding A/D Data Register y (ADDRy).
8. If the setting of the ADCSR.GBADIE bit is 1 (enabling interrupt generation on completion of group B scan), a group B scan end interrupt request is generated.

9. If ADGSPCR.GBRP = 1 is set (performing single scan continuously), A/D conversion for the group B analog input channels selected in the ADANSB0 and ADANSB1 registers restarts according to the conversion order from the channel with the smallest number n while the ADCSR.ADST remains 1 (starting A/D conversion).

Steps 6 to 9 are repeated as long as the ADGSPCR.GBRP bit remains 1. Do not clear the ADCSR.ADST bit as long as the ADGSPCR.GBRP bit is 1. To forcibly stop A/D conversion while ADGSPCR.GBRP = 1, follow the procedure shown in Figure 35.32.

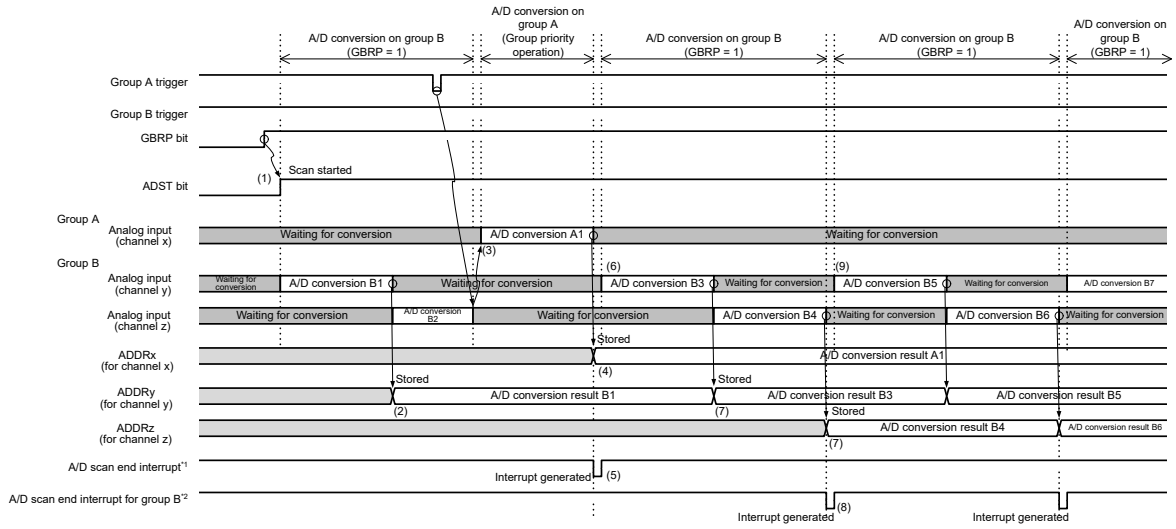

Note: x, y, and z (y < z) are the selected channel numbers by ADANSA0/1 or ADANSB0/1.
Note 1. ADC120_ADI
Note 2. ADC120_GBADI

Figure 35.21 Group priority operation example 1-5: Continuously activating single scan for group B (when ADGSPCR.GBRP = 1)

Note: To continuously activate single-scan operation for group B, disable group B trigger input.

35.3.5 Compare Function for Windows A and B

35.3.5.1 Compare Function Windows A and B

The compare function compares a reference value with the A/D conversion result. The reference value can be set for Window A and Window B independently. When the compare function is in use, the self-diagnosis function and double trigger mode cannot be used. The main differences between Window A and Window B are their different interrupt output signals and the constraint on Window B of only one selectable channel.

This section provides an example operation that combines continuous scan mode and the compare function.

The operation is as follows:

1. When the ADCSR.ADST bit is set to 1 (A/D conversion start) by software, a synchronous trigger (ELC) or an asynchronous trigger, A/D conversion starts of the selected channel. Both temperature sensor and internal reference voltage are not selectable at the same time. Additionally, when the internal reference voltage is selected as the high-potential reference voltage, A/D conversion of the temperature sensor or internal reference voltage is prohibited.
2. On completion of A/D conversion, the A/D conversion result is stored in the associated A/D Data Register y (ADDRy, ADTSDR, or ADOCDR). When ADCMPCR.CMPAE = 1, if bits in the ADCMPANSRy register or the ADCMPANSER register are set for Window A, the A/D conversion result is compared with the set ADCMPDR0/1 register value. When ADCMPCR.CMPBE = 1, if bits in the ADCMPBNSR register are set for Window B, the A/D conversion result is compared with the ADWINULB/ADWINLLB register setting.

3. As a result of the comparison, when Window A meets the condition set in ADCMPLR0/1 or ADCMPLER, the Compare Window A Flag (ADCMPSR0.CMPSTCHAn, ADCMPSR1.CMPSTCHAn, ADCMPSER.CMPSTTSA or ADCMPSER.CMPSTOCA) sets 1. At this time, if the ADCMPCR.CMPAIE bit is 1, an ADC120_CMPAI interrupt request is generated. In the same way, when Window B meets the condition set in ADCMPBNSR.CMPLB, the Compare Window B Flag (ADCMPBSR.CMPSTB) sets to 1. At this time, if the ADCMPCR.CMPBIE bit is 1, an ADC120_CMPBI interrupt request is generated.
4. On completion of all selected A/D conversions and comparisons, scan restarts.
5. After the ADC120_CMPAI and ADC120_CMPBI interrupts are accepted, the ADCSR.ADST bit is set to 0 (A/D conversion stop) and processing is performed for channels for which the compare flag is set to 1.
6. When all compare flags of Window A are cleared, the ADC120_CMPAI interrupt request is canceled. In the same way, when all compare flags of Window B are cleared, the ADC120_CMPBI interrupt request is reset. To perform comparison again, restart the A/D conversion.

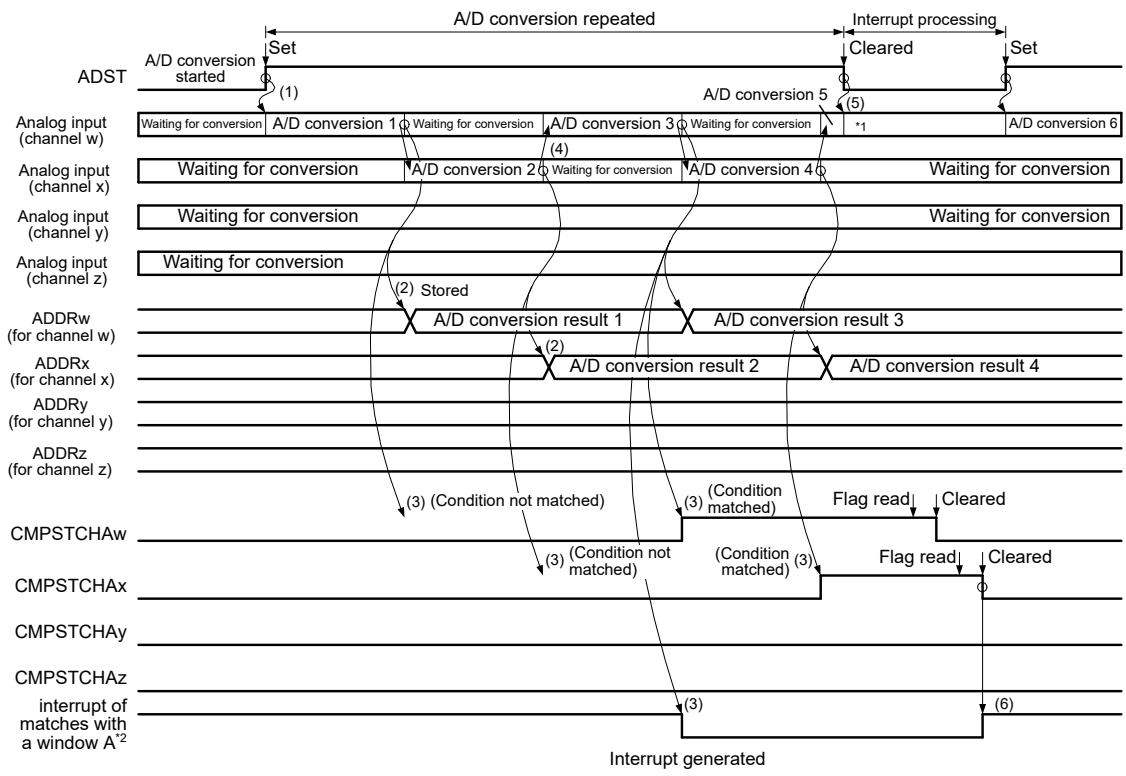

Note: w, x, y, and z (w < x < y < z) are the selected channel numbers by ADANSA0/1.
Note 1. Data on conversion is ignored.
Note 2. ADC120_CMPAI

Figure 35.22 Example of compare function operation, when the analog inputs (channel w to z) are compared

35.3.5.2 Event Output of Compare Function

The event output of the compare function specifies the upper-side reference voltage value and the lower-side reference voltage value for window A and window B, respectively. The output compares the A/D converted value of the selected channel with the upper and lower side reference voltage value and outputs events (ADC120_WCMPM/ADC120_WCMPUM) based on event conditions (A or B, A and B, A xor B) and comparison result of window A and window B.

If more than one channel is selected for window A, and even when one channel in window A meets the comparison condition, the comparison result of window A is met. When using this function, perform A/D conversion in single scan mode.

Any channels from analog input, internal reference voltage, and temperature sensor output are selectable for window A. However, neither the internal reference voltage nor the temperature sensor output can be selected together with any other channel. Additionally, if the internal reference voltage is selected as the high-potential reference voltage of the A/D converter, the internal reference voltage or the temperature sensor output cannot be A/D converted.

One channel from analog input, internal reference voltage, and temperature sensor output is selectable for window B. Additionally, if the internal reference voltage is selected as the high-potential reference voltage, the internal reference voltage or the temperature sensor output cannot be A/D converted.

The following sequence is an example of how to set up and use the event output of the compare function:

1. Confirm that the value in the ADCSR.ADCS bits is 00b (single scan mode).
2. Select the channel for window A in the ADCMPANSR0/1 and ADCMPANSER registers. Set the window comparison conditions in the ADCMPLR0/1 and ADCMPLER registers. Set the upper-side and lower-side reference values in the ADCMPDR0/1 registers.
3. Select the channel and comparison conditions for Window B in the ADCMPBNSR register, and set the upper and lower reference values in the ADWINULB and ADWINLLB registers.
4. Set the composite conditions for window A/B, window A/B operation enable, and interrupt output enable in the ADCMPCR register.

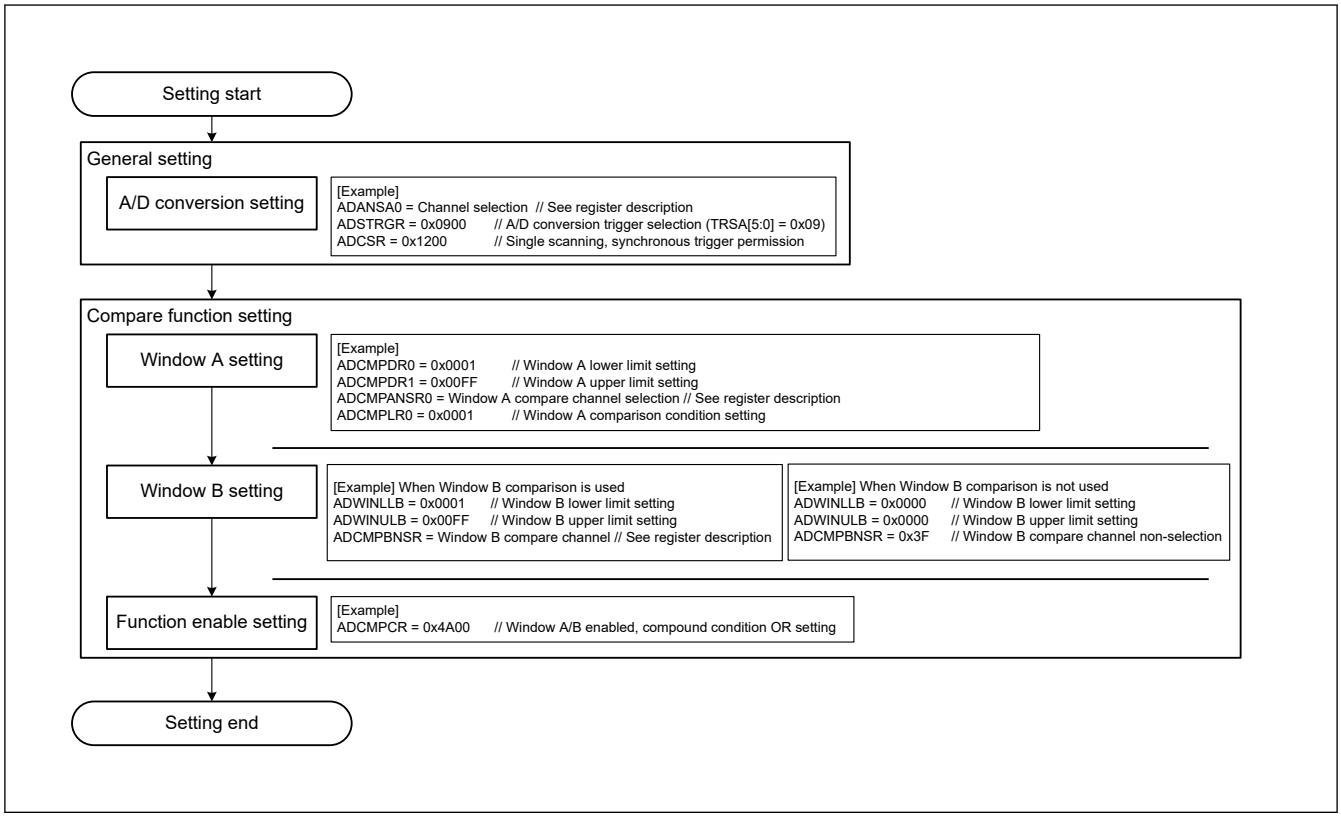

Figure 35.23 Setting example when using the event output of the compare function

For event output usage when using only window A for the compare function, note the following:

- Enable both Window A and Window B (ADCMPCR.CMPAE = 1, ADCMPCR.CMPBE = 1)
- Set the compound condition of Window A and Window B to “OR condition” (ADCMPCR.CMPAB[1:0] = 00b)
- Set the compared channel of Window B to “No selection” (ADCMPBNSR.CMPCHB[5:0] = 0x3F)
- Set the compare condition of Window B to “0 < results < 0 always means mismatch”. (ADCMPCR.WCMPE = 1, ADWINLLB[15:0] = ADWINULB[15:0] = 0x0000, and ADCMPBNSR.CMPLB = 1)

Figure 35.24 shows the event output operation example of compare function.

A scan end event (ADC120_ADI) is output with the same timing as single scan completion. A match or mismatch event (ADC120_WCMPM/ADC120_WCMPUM) is output with 1 PCLKA cycle delay depending on the ADCMPCR.CMPAB[1:0] settings.

Note: The match and mismatch events are exclusive, so both events are never output simultaneously.

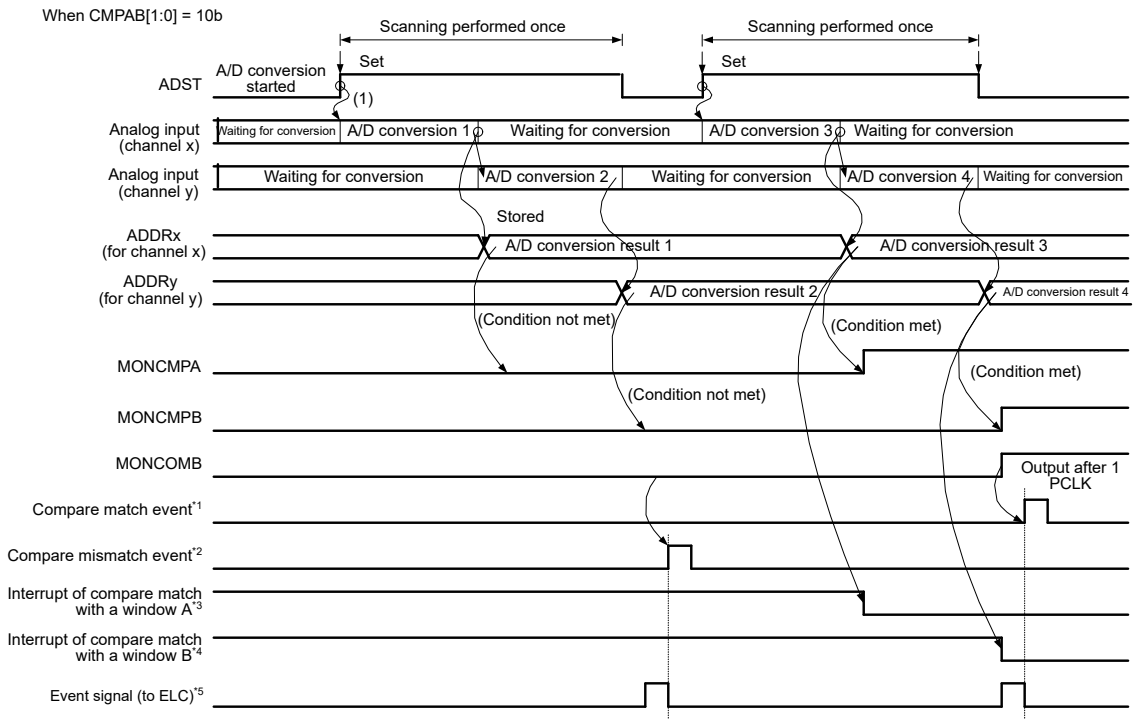

Note: x, and y (x < y) are the selected channel numbers by ADANSA0/1.
Note 1. ADC120_WCMPM
Note 2. ADC120_WCMPUM
Note 3. ADC120_CMPAI
Note 4. ADC120_CMPBI
Note 5. ADC120_ADI

Figure 35.24 Example operation of the compare function event output, when the analog inputs (channel x and y) are compared

Note: Event output of compare function outputs match/mismatch from the comparison results of Window A and Window B, based on the ADCMPCR.CMPAB[1:0] settings.

Note: The comparison result of Window A is the logical addition of the comparison results of the comparison target channels of Window A. The comparison results of Window A and Window B are updated by each A/D conversion, and are kept even when single scan ends. Set ADCMPCR.CMPAE and ADCMPCR.CMPBE to 0 to clear the comparison results to 0.

35.3.5.3 Restrictions on Compare Function

The following constraints apply for the compare function:

- The compare function cannot be used together with the self-diagnosis function or double-trigger mode. (The compare function is not available for ADRD, ADDBLDR, ADDBLDRA, and ADDBLDRB.)
- Specify single scan mode when using match/mismatch event outputs.
- When the temperature sensor output, internal reference voltage is selected for Window A, Window B operations are prohibited.

- When the temperature sensor output, internal reference voltage is selected for Window B, Window A operations are prohibited.
- Setting the same channel for Window A and Window B is prohibited.
- Set the reference voltage values so that the high-potential reference voltage value is equal to or larger than the low potential reference voltage value.

35.3.6 Analog Input Sampling and Scan Conversion Time

Scan conversion can be activated either by a software trigger, a synchronous trigger (ELC), or an asynchronous trigger (ADTRG0). After the start-of-scanning-delay time (t_D) has elapsed, processing for disconnection detection assistance, and processing of conversion for self-diagnosis all proceed, followed by processing for A/D conversion.

Figure 35.25 shows the scan conversion timing, in which scan conversion is activated by a software trigger or a synchronous trigger (ELC). Figure 35.26 shows the scan conversion timing, in which scan conversion is activated by an asynchronous trigger (ADTRG0). The scan conversion time (t_{SCAN}) includes the start-of-scanning-delay time (t_D), disconnection detection assistance processing time (t_{DIS})*1, self-diagnosis A/D conversion processing time (t_{DIAG} and t_{DSD})*2, A/D conversion processing time (t_{CONV}), and end-of-scanning-delay time (t_{ED}).

The A/D conversion processing time (t_{CONV}) consists of input sampling time (t_{SPL}) and time for conversion by successive approximation (t_{SAM}). The sampling time (t_{SPL}) is used to charge sample-and-hold circuits in the A/D converter. If there is not sufficient sampling time due to the high impedance of an analog input signal source, or if the A/ D conversion clock (ADCLK) is slow, sampling time can be adjusted using the ADSSTRn register.

The time for conversion by successive approximation (t_{SAM}) is the following

- 31.5 ADCLK states with 12-bit accuracy and high-speed A/D conversion mode (ADCSR.ADHSC = 0) and normal conversion mode (ADACSR.ADSAC = 0) selected.
- 40.5 ADCLK states with 12-bit accuracy and Low-power A/D conversion mode (ADCSR.ADHSC = 1) and normal conversion mode (ADACSR.ADSAC = 0) selected.
- 21.5 ADCLK states with 12-bit accuracy and high-speed A/D conversion mode (ADCSR.ADHSC = 0) and fast conversion mode (ADACSR.ADSAC = 1) selected.
- 27.5 ADCLK states with 12-bit accuracy and Low-power A/D conversion mode (ADCSR.ADHSC = 1) and fast conversion mode (ADACSR.ADSAC = 1) selected.

Table 35.23 shows the time for conversion by successive approximation (t_{SAM}).

The scan conversion time (t_{SCAN}) in single scan mode for which the number of selected channels is n can be determined as follows:

$$t_{\mathrm{SCAN}} = t_D + (t_{\mathrm{DIS}} \times n) + t_{\mathrm{DIAG}} + t_{\mathrm{ED}} + (t_{\mathrm{CONV}} \times n)\ ^{*3}$$

The scan conversion time for the first cycle in continuous scan mode is t_{SCAN} for single scan minus t_{ED} . The scan conversion time for the second and subsequent cycles in continuous scan mode is fixed in the following:

$$(t_{\mathrm{DIS}} \times n) + t_{\mathrm{DIAG}} + t_{\mathrm{DSD}} + (t_{\mathrm{CONV}} \times n)\ ^{*3}$$

Note 1. When disconnection detection assistance is not selected, t_{DIS} = 0.

Only when the temperature sensor or internal reference voltage is A/D-converted, the auto-discharge period of 15 ADCLK states is inserted.

Note 2. When the self-diagnosis function is not used, t_{DIAG} = 0, t_{DSD} = 0.

Note 3. When input sampling times (t_{SPL}) of all selected channels are the same, this element equals t_{CONV} × n. If each channel has a different sampling time, this element equals that of t_{SPL} and t_{SAM} set to each selected channel.

Table 35.23 shows the times for conversion during scanning.

Table 35.23 Conversion times during scanning (in numbers of cycles of ADCLK and PCLKA)

Item			Symbol		Type/Conditions			Unit
					Synchronous trigger*5	Asynchronous trigger	Software trigger	
Scan start delay time*1 *2	A/D conversion on group A under group A priority control.	Group B is to be stopped (Group A is activated after group B is stopped by of an A/D conversion source from group A).	t_D		3 PCLKA + 6 ADCLK 5 PCLKA + 3 ADCLK*6	—	—	Cycles
		Group B is not to be stopped (Activation by an A/D conversion source from group A).			2 PCLKA + 4 ADCLK	—	—	
	A/D conversion when self-diagnosis is enabled.	A/D conversion for self-diagnosis is to be started.			2 PCLKA + 4 ADCLK	4 PCLKA + 6 ADCLK	6 ADCLK	
	All other				2 PCLKA + 4 ADCLK	2 PCLKA + 4 ADCLK	4 ADCLK	
Disconnection detection assistance processing time			t_{DIS}		Setting in ADNDIS[3:0] (initial value = 0x00) × ADCLK*3			
Self-diagnosis conversion processing time*1	Sampling time*4		t_{DIAG}	t_{SPL}	Setting in ADSSTRn (n = 0 to 14, L, T, O) (initial value = 0x0D) × ADCLK + 0.5 ADCLK			
	Time for conversion by successive approximation	12-bit conversion accuracy		t_{SAM}	31.5 ADCLK at high-speed A/D conversion mode (ADCSR.ADHSC = 0) and normal conversion mode (ADACSR.ADSAC = 0) 40.5 ADCLK at Low-power A/D conversion mode (ADCSR.ADHSC = 1) and normal conversion mode (ADACSR.ADSAC = 0) 21.5 ADCLK at high-speed A/D conversion mode (ADCSR.ADHSC = 0) and fast conversion mode (ADACSR.ADSAC = 1) 27.5 ADCLK at Low-power A/D conversion mode (ADCSR.ADHSC = 1) and fast conversion mode (ADACSR.ADSAC = 1)			
	Wait time between self-diagnosis conversion end and analog channel sampling start.			t_{DED}	2 ADCLK			
	Wait time between last channel conversion end and self-diagnosis sampling start in continuous scan mode.			t_{DSD}	2 ADCLK			
A/D conversion processing time*1	Sampling time*4		t_{CONV}	t_{SPL}	Setting in ADSSTRn (n = 0 to 14, L, T, O) (initial value = 0x0D) × ADCLK + 0.5 ADCLK			
	Time for conversion by successive approximation	12-bit conversion accuracy		t_{SAM}	31.5 ADCLK at high-speed A/D conversion mode (ADCSR.ADHSC = 0) and normal conversion mode (ADACSR.ADSAC = 0) 40.5 ADCLK at Low-power A/D conversion mode (ADCSR.ADHSC = 1) and normal conversion mode (ADACSR.ADSAC = 0) 21.5 ADCLK at high-speed A/D conversion mode (ADCSR.ADHSC = 0) and fast conversion mode (ADACSR.ADSAC = 1) 27.5 ADCLK at Low-power A/D conversion mode (ADCSR.ADHSC = 1) and fast conversion mode (ADACSR.ADSAC = 1)			
Scan end processing time*1			t_{ED}		1 PCLKA + 3 ADCLK 2 PCLKA + 3 ADCLK*6			

Note 1. See Figure 35.25 and Figure 35.26 for an illustration of times t_D, t_{DIAG}, t_{CONV}, and t_{ED}.
Note 2. This is the maximum time required from software writing or trigger input to A/D conversion start.
Note 3. The value is fixed to 0x0F (15 ADCLK) when the temperature sensor output or internal reference voltage is A/D- converted.
Note 4. The sampling time setting should satisfy the electrical characteristics. For the details, see section 43.4. ADC12 Characteristics.
Note 5. This does not include the time consumed in the path from timer output to trigger input.
Note 6. If ADCLK is faster than PCLKA (PCLKA to ADCLK frequency ratio = 1:2 or 1:4).

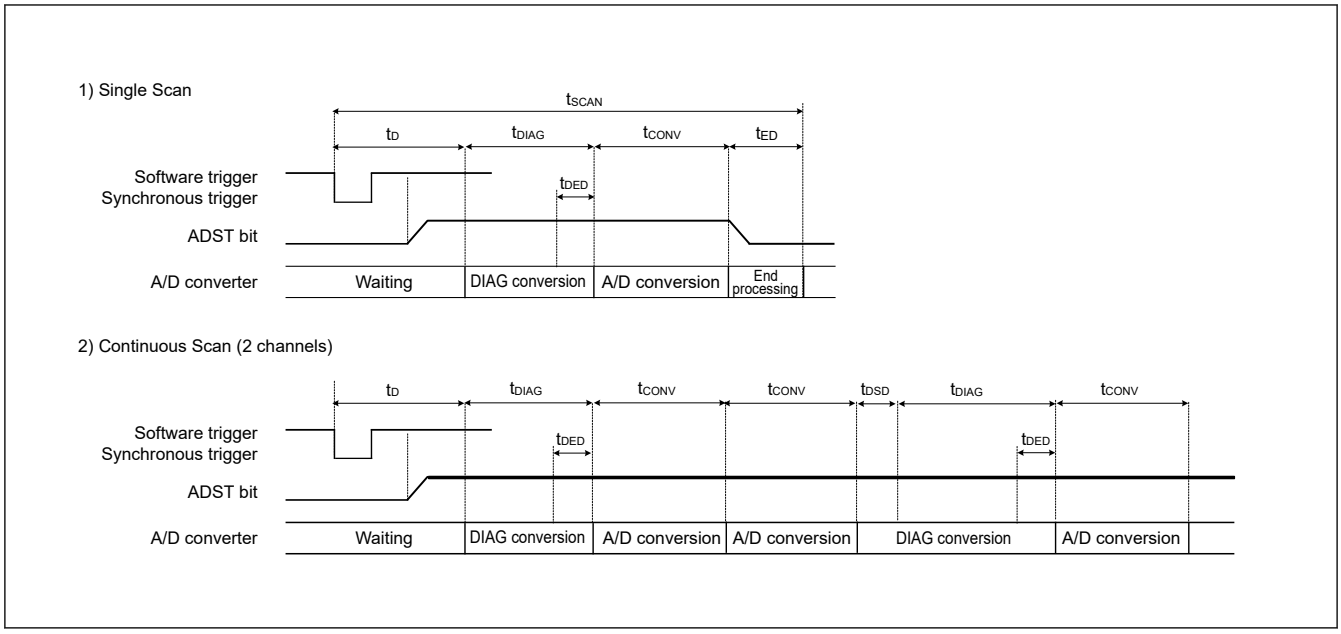

Figure 35.25 Scan conversion timing when activated by software or a synchronous trigger input (ELC)

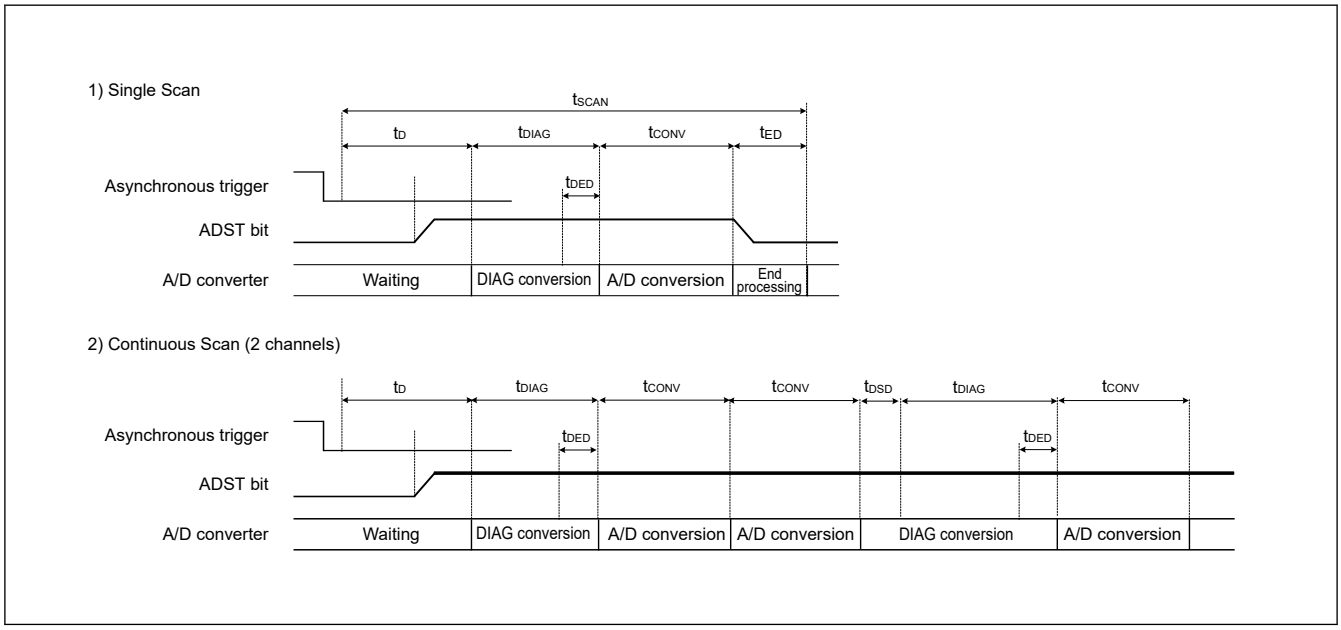

Figure 35.26 Scan conversion timing when activated by an asynchronous trigger input (ADTRG0)

35.3.7 Usage Example of A/D Data Register Automatic Clearing Function

Setting the ADCER.ACE bit to 1 automatically clears the A/D data registers (ADDRy, ADRD, ADDBLDR, ADDBLDRA, ADDBLDRB, ADTSDR, ADOCDR) to 0x0000 when the A/D data registers are read by the CPU or DTC.

This function enables detection of update failures of the A/D data registers (ADDRy, ADRD, ADDBLDR, ADDBLDRA, ADDBLDRB, ADTSDR, ADOCDR). This section describes examples in which the function to automatically clear the ADDRy register is enabled and disabled.

- If the ADCER.ACE bit is 0 (automatic clearing is disabled) and for some reason, if the A/D conversion result (0x0222) is not written to the ADDRy register, the ADDRy value retains the old data (0x0111). In addition, if this ADDRy value is read into a general-purpose register using an A/D scan end interrupt, the old data (0x0111) can be saved in the general-purpose register. When checking whether there is an update failure, it is necessary to frequently save the old data in SRAM or in a general-purpose register.
- If the ADCER.ACE bit is 1 (automatic clearing is enabled), when ADDRy = 0x0111 is read by the CPU or DTC, ADDRy is automatically set to 0x0000. Next, if the A/D conversion result of 0x0222 cannot be transferred to ADDRy

for some reason, the cleared data (0x0000) remains as the ADDRy value. If this ADDRy value is read into a general-purpose register using an A/D scan end interrupt, 0x0000 is saved in the general-purpose register. Occurrence of an ADDRy update failure can be determined by checking that the read data value is 0x0000.

35.3.8 A/D-Converted Value Addition/Average Mode

A/D-converted value addition/average mode can be used when A/D conversion of the analog input of the selected channels, the temperature sensor output, or the internal reference voltage is selected.

In A/D-converted value addition mode, the same channel is A/D-converted 1, 2, 3, 4, or 16 consecutive times, and the sum of the converted values is stored in the data register. In A/D-converted value average mode, the same channel is A/D-converted 2 or 4 consecutive times, and the mean of the converted values is stored in the data register. The use of the average of these results can improve the accuracy of A/D conversion, depending on the types of noise components that are present. This function, however, cannot always guarantee an improvement in A/D conversion accuracy.

The A/D-converted value addition/average function can be used when A/D conversion of the analog inputs of the selected channels or A/D conversion of the temperature sensor output or A/D conversion of the internal reference voltage is selected. The A/D-converted value addition/average function can also be used for channels for which the double-trigger function is selected.

The addition function for self-diagnosis is not provided.

35.3.9 Disconnection Detection Assist Function

The ADC12 incorporates a function to fix the charge for sampling capacitance to the specified state VREFH0 or VREFL0 before the start of A/D conversion. This function enables disconnection detection in wiring of analog inputs.

Figure 35.27 shows the A/D conversion operation when the disconnection detection assist function is used. Figure 35.28 shows an example of disconnection detection when precharge is selected. Figure 35.29 shows an example of disconnection detection when discharge is selected.

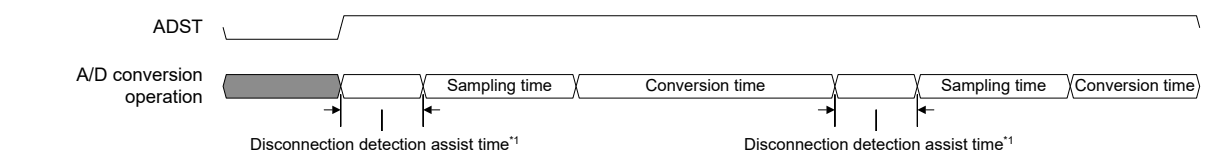

Note 1. 0 to 15 cycles of ADCLK

Figure 35.27 Operation of A/D conversion when disconnection detection assist function is used

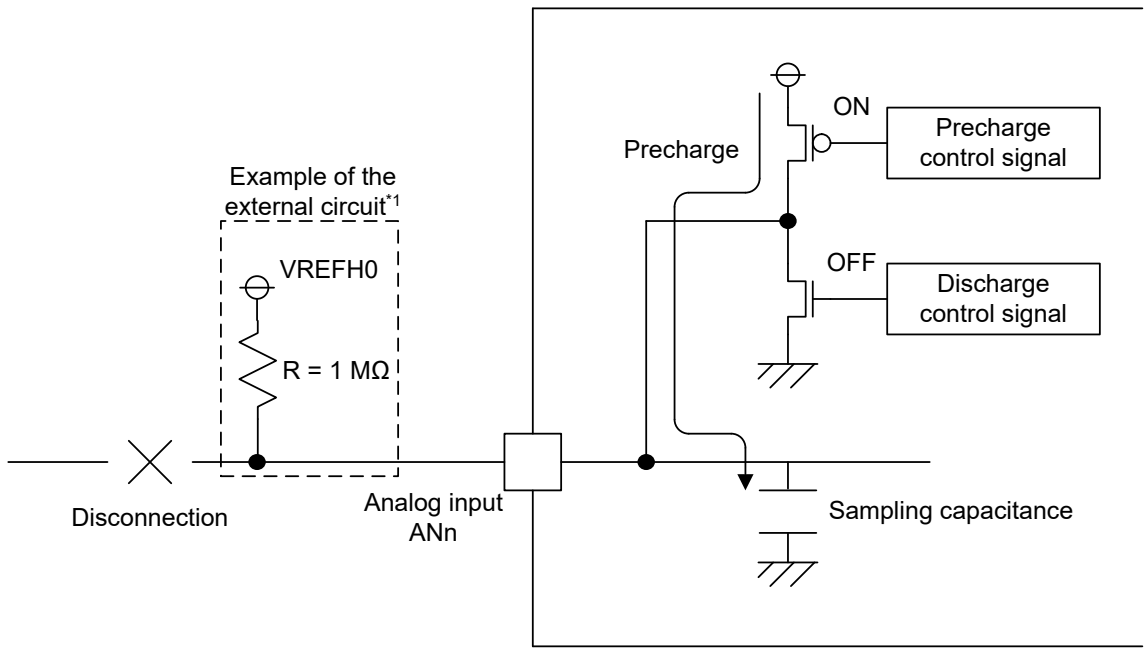

Note 1. The converted result should be used after it is fully evaluated because the result data when disconnection occurs varies depending on the external circuit.

Figure 35.28 Example of disconnection detection when precharge is selected

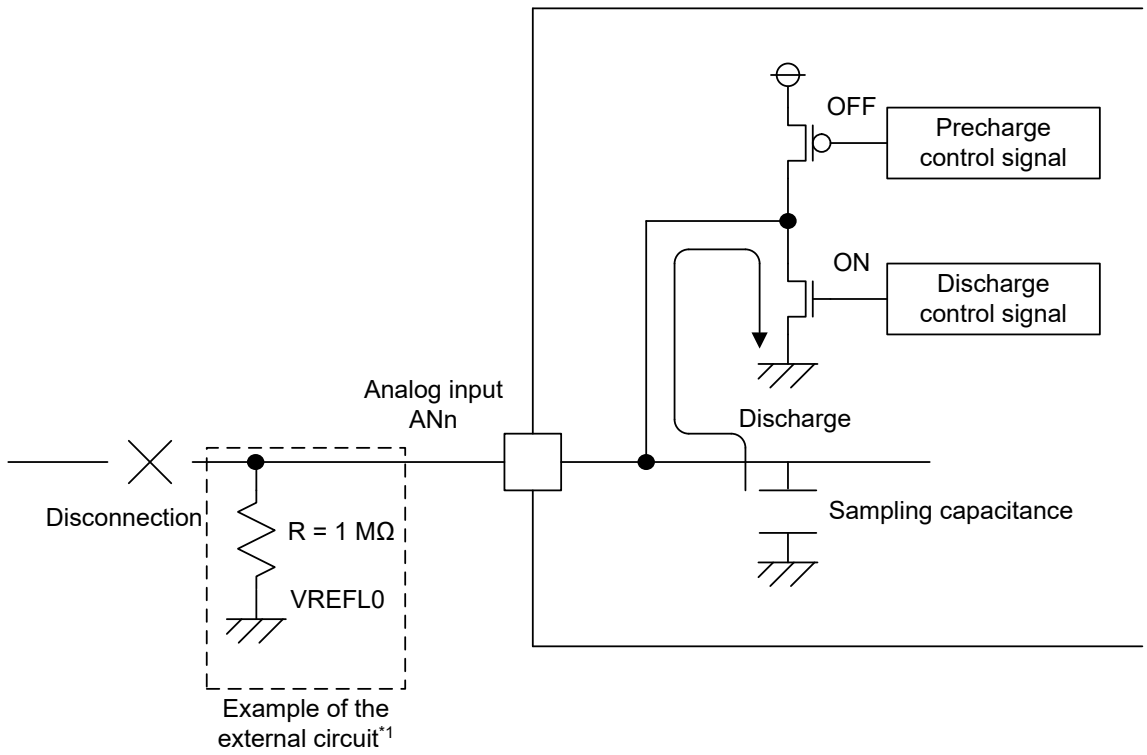

Note 1. The converted result should be used after it is fully evaluated because the result data when disconnection occurs varies depending on the external circuit.

Figure 35.29 Example of disconnection detection when discharge is selected

35.3.10 Starting A/D Conversion with an Asynchronous Trigger

A/D conversion can be started by the input of an asynchronous trigger. To start A/D conversion by an asynchronous trigger, set the pin function in the PmnPFS register, set the A/D Conversion Start Trigger Select bits (ADSTRGR.TRSA[5:0]) to 0x00, then input a high-level signal to the asynchronous trigger (ADTRG0 pin). Finally, set both the ADCSR.TRGE and ADCSR.EXTRG bits to 1. Figure 35.30 shows timing of the asynchronous trigger input.

An asynchronous trigger cannot be selected in the A/D conversion start trigger for group B used in group scan mode. For details on setting the pin function, see section 18, I/O Ports.

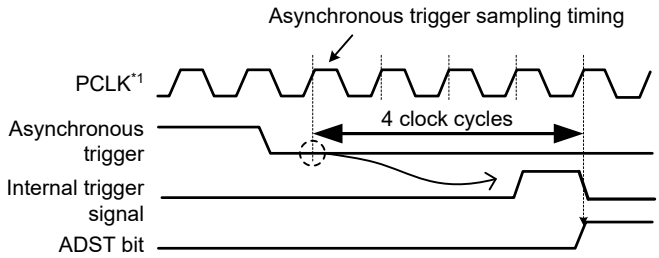

Note 1. PCLKA

Figure 35.30 Asynchronous trigger input timing

35.3.11 Starting A/D Conversion with a Synchronous Trigger from a Peripheral Module

A/D conversion can be started by a synchronous trigger (ELC). To do this, set the ADCSR.TRGE bit to 1 and the ADCSR.EXTRG bit to 0, and select the relevant sources in the ADSTRGR.TRSA[5:0] bits and ADSTRGR.TRSB[5:0] bits.

35.4 Interrupt Sources and DTC Transfer Requests

35.4.1 Interrupt Requests

The ADC12 can send scan end interrupt requests ADC120_ADI and ADC120_GBADI to the CPU. The ADC12 also generates the ADC120_CMPAI/ADC120_CMPBI interrupt for the CPU in response to matches with a condition for comparison.

An ADC120_ADI interrupt is always generated. An ADC120_GBADI interrupt can be generated by setting the ADCSR.GBADIE bit to 1. Similarly, ADC120_CMPAI and ADC120_CMPBI interrupts can be generated by setting the ADCMPCR.CMPAIE and ADCMPCR.CMPBIE bit to 1.

In addition, the DTC can be started when an ADC120_ADI or an ADC120_GBADI interrupt is generated. Using an ADC120_ADI or ADC120_GBADI interrupt to activate the DTC to read the converted data enables continuous conversion without a burden on software.

Table 35.24 describes the interrupt sources and ELC events available for the ADC12.

Table 35.24 The interrupt source and ELC event of ADC12 (1 of 2)

Operation			Interrupt request or ELC event	Interrupt request	DTC activation	ELC event request	Function
Scan mode	Double trigger mode	Compare function Window A/B					
Single scan mode	Deselected	Deselected	ADC120_ADI	✓	✓	✓	ADC120_ADI generated at the end of single scan
		Selected	ADC120_ADI	✓	✓	✓	ADC120_ADI generated at the end of single scan
			ADC120_CMPAI	✓	—	—	ADC120_CMPAI generated on a match comparison condition of Window A
			ADC120_CMPBI	✓	—	—	ADC120_CMPBI generated on a match comparison condition of Window B
			ADC120_WCMPM	—	✓	✓	ADC120_WCMPM generated on a match condition of the Window A/B compare function
			ADC120_WCMPUM	—	✓	✓	ADC120_WCMPUM generated on a mismatch condition of the Window A/B compare function
	Selected	Deselected	ADC120_ADI	✓	✓	✓	ADC120_ADI generated at the end of scans in the even numbered times
Continuous scan mode	Deselected	Deselected	ADC120_ADI	✓	✓	✓	ADC120_ADI generated at the end of scan of all selected channels
		Selected	ADC120_CMPAI	✓	—	—	ADC120_CMPAI generated on a match comparison condition of Window A
			ADC120_CMPBI	✓	—	—	ADC120_CMPBI generated on a match comparison condition of Window B

Table 35.24 The interrupt source and ELC event of ADC12 (2 of 2)

Operation			Interrupt request or ELC event	Interrupt request	DTC activation	ELC event request	Function
Scan mode	Double trigger mode	Compare function Window A/B					
Group scan mode	Deselected	Deselected	ADC120_ADI	✓	✓	✓	ADC120_ADI generated at the end of group A scan
			ADC120_GBADI	✓	✓	—	ADC120_GBADI dedicated to group B generated at the end of group B scan
		Selected	ADC120_ADI	✓	✓	✓	ADC120_ADI generated at the end of group A scan
			ADC120_GBADI	✓	✓	—	ADC120_GBADI dedicated to group B generated at the end of group B scan
			ADC120_CMPAI	✓	—	—	ADC120_CMPAI generated on a match comparison condition of Window A
			ADC120_CMPBI	✓	—	—	ADC120_CMPBI generated on a match comparison condition of Window B
	Selected	Deselected	ADC120_ADI	✓	✓	✓	ADC120_ADI generated at the end of group A scans in the even-numbered times
			ADC120_GBADI	✓	✓	—	ADC120_GBADI dedicated to group B generated at the end of group B scan

Note: ✓ available
—: unavailable

For details on DTC settings, see section 16, Data Transfer Controller (DTC).

35.5 Event Link Function

35.5.1 Event Output to the ELC

The ELC uses the ADC120_ADI interrupt request signal as an event signal ADC120_ADI, enabling link operation for the preset module. The ADC120_GBADI interrupt and ADC120_CMPAI/ADC120_CMPBI interrupts cannot be used as an event signal. For details, see Table 35.24.

An event signal can be output regardless of the settings of the corresponding interrupt request enable bits. For the scan end event (ADC120_ADI), a high-level pulse for one PCLKA cycle is output at the same output timing as the interrupt output (ADC120_ADI) shown in Table 35.24. For a compare function match (ADC120_WCMPM) and mismatch event (ADC120_WCMPUM) to the ELC, a high-level pulse for one PCLKA cycle is output at the timing delayed by one cycle (PCLKA) from the interrupt output (ADC120_ADI) shown in Table 35.24.

To use compare function match (ADC120_WCMPM) or mismatch event (ADC120_WCMPUM) to the ELC, specify single-scan mode.

35.5.2 ADC12 Operation through an Event from the ELC

The ADC12 can start A/D conversion by the preset event specified in the ELSRn settings for the ELC as follows:

- Select the ELC_AD00 signal in the ELC.ELSR8 register
- Select the ELC_AD01 signal in the ELC.ELSR9 register

If an ELC event occurs during A/D conversion, the event is disabled.

35.6 Selecting Reference Voltage

The ADC12 can select VREFH0, AVCC0, or internal reference voltage as the high-potential reference voltage and can select VREFL0 or AVSS0 as the low-potential reference voltage. Set these reference voltages before starting A/D conversion. For details on the settings, see section 35.2.37. ADHVREFCNT : A/D High-Potential/Low-Potential Reference Voltage Control Register.

35.7 A/D Conversion Procedure When Selecting Internal Reference Voltage as High-Potential Reference Voltage

The following sequence describes the A/D conversion procedure after selecting the internal reference voltage as the high-potential reference voltage. In this case, A/D conversion is possible for channels of analog input, however A/D conversion of the internal reference voltage and the temperature sensor output is prohibited.

1. Set ADHVREFCNT.HVSEL[1:0] to 11b to discharge the high-potential reference voltage path in the ADC12.
2. Wait for a 1 μs discharge period in the software.
3. Set ADHVREFCNT.HVSEL[1:0] to 10b to select internal reference voltage as the high-potential reference voltage.*1
4. Wait until the internal reference voltage is stabilized (for 5 μs) in the software, then perform A/D conversion.

Note 1. The ADC12 has a protection function that disables selection of internal reference voltage (ADHVREFCNT.HVSEL[1:0] = 10b) without discharge (ADHVREFCNT.HVSEL[1:0] = 11b) from the selection of VREFH0 (ADHVREFCNT.HVSEL[1:0] = 01b) or AVCC0 (ADHVREFCNT.HVSEL[1:0] = 00b). If the internal reference voltage is selected without discharge, discharge is forcibly set. Select the internal reference voltage again 1 μs later.

Figure 35.31 shows a waveform chart for the procedure to select internal reference voltage as the high-potential reference voltage.

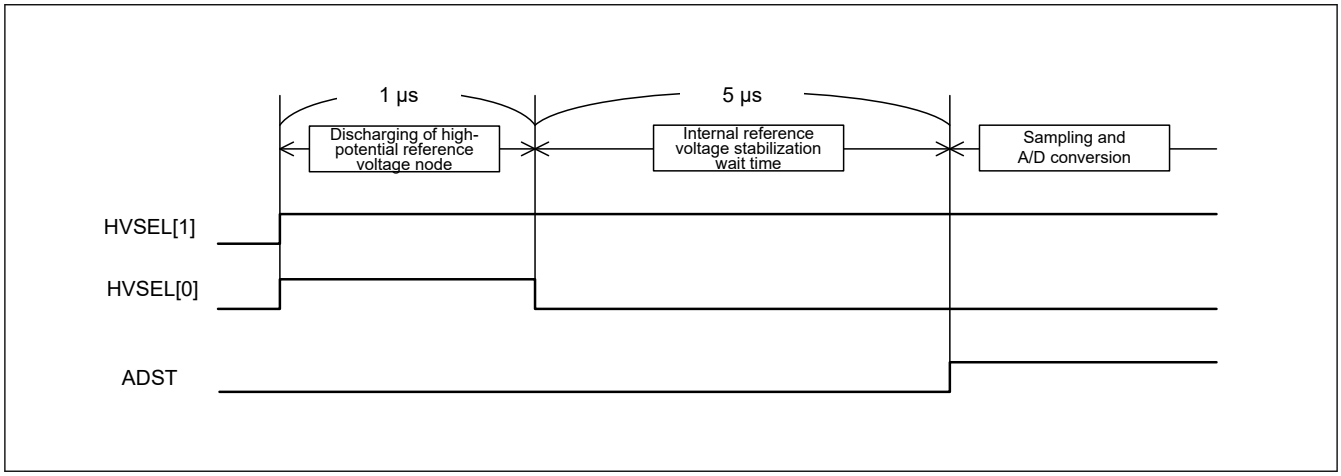

Figure 35.31 Procedure to select internal reference voltage as high-potential reference voltage

35.8 Usage Notes

35.8.1 Constraints on Setting the Registers

Set each register while the ADCSR.ADST bit is 0.

35.8.2 Constraints on Reading the Data Registers

The following registers must be read in halfword units:

- A/D Data Registers
- A/D Data Duplexing Register
- A/D Data Duplexing Register A
- A/D Data Duplexing Register B

- A/D Temperature Sensor Data Register
- A/D Internal Reference Voltage Register
- A/D Self-Diagnosis Data Register.

If a register is read twice in byte units, that is, the upper byte and lower byte are read separately, the A/D-converted value read initially might disagree with the A/D-converted value read subsequently. To prevent this, never read the data registers in byte units.

35.8.3 Constraints on Stopping A/D Conversion

(1) A/D Conversion Stop Procedure

To stop A/D conversion when an asynchronous trigger or a synchronous trigger is selected as the condition for starting A/D conversion, follow the procedure shown in Figure 35.32.

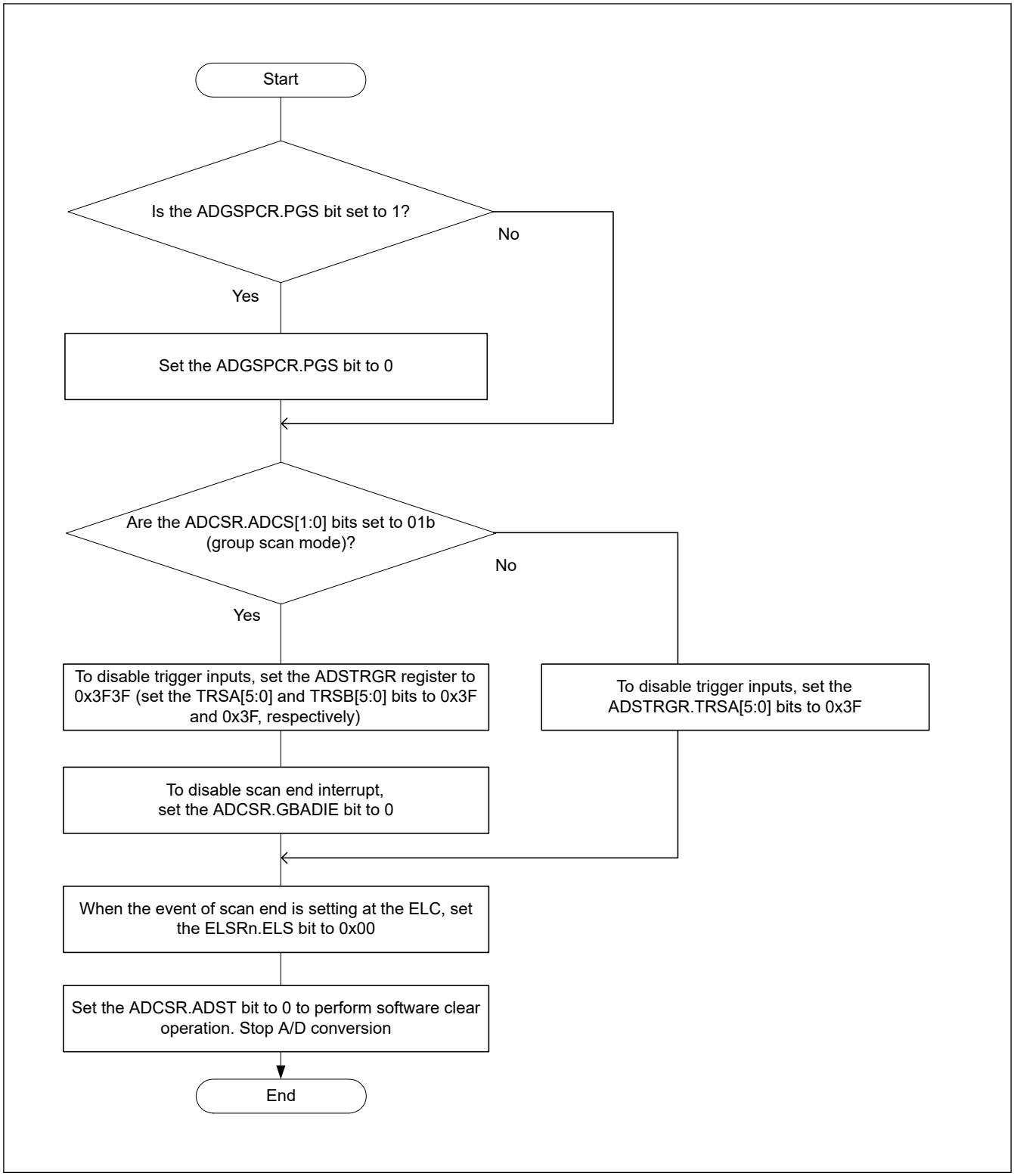

Figure 35.32 Procedures for clearing the ADCSR.ADST bit by software

To specify the following settings after performing the clear operation by software, provide a wait period for at least two ADCLK cycles.

- Enabling scan end interrupts
- Enabling scan end events for the event link controller
- Starting A/D conversion by software
- Enabling trigger input

(2) Notes on Modes and Status Bits

If necessary, individually initialize or set again the voltage status for self-diagnosis, the judgment of the even number or odd number specified for double-trigger mode, and the monitor flags of the compare function.

- To set again the voltage status for self-diagnosis, set the ADCER.DIAGLD bit to 1 and then set a desired value in the ADCER.DIAGVAL[1:0] bits.
- If the setting of the ADCSR.DBLE bit is changed from 0 to 1, the double-trigger mode operation starts from the first scanning.
- To initialize the monitor flags of the compare function (MONCMPA, MONCMPB, and MONCOMB), set the ADCMPCR.CMPAE and ADCMPCR.CMPBE bits to 0.

35.8.4 A/D Conversion Restart and Termination Timing

A maximum of 6 ADCLK cycles is required for the idle analog unit of the ADC12 to restart on setting the ADCSR.ADST bit to 1. A maximum of 3 ADCLK cycles is required for the operating analog unit of the ADC12 to terminate on setting the ADCSR.ADST bit to 0.

35.8.5 Constraints on Scan End Interrupt Handling

When scanning the same analog input twice using any trigger, the first A/D-converted data is overwritten with the second A/D-converted data. This occurs when the CPU does not complete the reading of the A/D-converted data by the time the A/D conversion of the first analog input for the second scan ends after the first scan end interrupt is generated.

35.8.6 Settings for the Module-Stop Function

The Module Stop Control Register can enable or disable ADC12 operation. The ADC12 is initially stopped after a reset. The registers become accessible on release from the module-stop state. After release from the module-stop state, wait for at least 1 µs before starting A/D conversion. For details, see section 10, Low Power Modes.

35.8.7 Notes on Entering the Low-Power States

Before entering the module-stop state or Software Standby mode, be sure to stop A/D conversion. Set the ADCSR.ADST bit in ADCSR to 0 and secure certain period until the analog unit of the ADC12 stops. Follow the procedure shown in Figure 35.32 to clear the ADCSR.ADST bit with software. Then, wait for 3 clock cycles of ADCLK before entering the module-stop state or Software Standby mode.

35.8.8 Error in Absolute Accuracy When Disconnection Detection Assistance Is in Use

Using disconnection detection assistance leads to an error in absolute accuracy of the ADC12. This error arises because an erroneous voltage is input to the analog input pins due to the resistive voltage division between the pull-up or pull-down resistor (Rp) and the resistance of the signal source (Rs). This error in absolute accuracy is calculated from the following formula:

$$\text{Maximum error in absolute accuracy (LSB)} = \left(2^{\text{Resolution}} - 1\right) \times \text{Rs}/\left(\text{Rs} + \text{Rp}\right)$$

Only use disconnection detection assistance after thorough evaluation.

35.8.9 ADHSC Bit Rewriting Procedure

Before changing the A/D Conversion Select bit (ADCSR.ADHSC) from 0 to 1 or from 1 to 0, the ADC12 must be in the standby state. Use the following procedure to modify the ADCSR.ADHSC bit. After the Sleep bit (ADHVREFCNT.ADSLP) is set to 0, wait for at least 1 µs then start the A/D conversion.

1. Set the Sleep bit (ADHVREFCNT.ADSLP) to 1.
2. Wait for at least 0.2 µs, then modify the A/D Conversion Select bit (ADCSR.ADHSC).
3. Wait for at least 4.8 µs, then set the Sleep bit (ADHVREFCNT.ADSLP) to 0.

Note: Do not set the Sleep bit (ADHVREFCNT.ADSLP) to 1 except when modifying the A/D Conversion Select bit (ADCSR.ADHSC).

Note: Do not reset the Sleep bit when the A/D Conversion Select bit (ADCSR.ADHSC) is 1. After this bit is set to 0 or the operating mode transitions to the module-stop mode, reset the Sleep bit using the ADCSR.ADHSC bit rewriting procedure.

35.8.10 Constraints on Operating Modes and Status Bits

Initialize or set again individually, if necessary, the voltage values in self-diagnosis, the value of the first scan or second scan in double trigger mode, the data buffer pointer, and status monitor in the compare function.

- Select the voltage values in self-diagnosis (ADCER.DIAGVAL[1:0]) after setting ADCER.DIAGLD to 1.
- Double-trigger mode operates as the first scan after setting ADCSR.DBLE from 0 to 1.
- The status monitor bits (MONCMPA, MONCMPB, MONCOMB) in the compare function are initialized after setting ADCMPCR.CMPAE and ADCMPCR.CMPBE to 0.

35.8.11 Notes on Board Design

The board should be designed so that digital circuits and analog circuits are separated from each other as far as possible. In addition, digital circuit signal lines and analog circuit signal lines should not intersect or be placed near each other. If these rules are not followed, noise can occur on analog signals and A/D conversion accuracy is affected. The analog input pins, reference power supply pin (VREFH0), reference ground pin (VREFL0), and analog power supply (AVCC0) should be separated from digital circuits using the analog ground (AVSS0). The analog ground (AVSS0) should be connected to a stable digital ground (VSS) on the board (single-point ground plane connection).

35.8.12 Constraints on Noise Prevention

To prevent the analog input pins from being destroyed by abnormal voltage such as excessive surge, insert a capacitor between AVCC0 and AVSS0 and between VREFH0 and VREFL0. Additionally, connect a protection circuit to protect the analog input pins as shown in Figure 35.33.

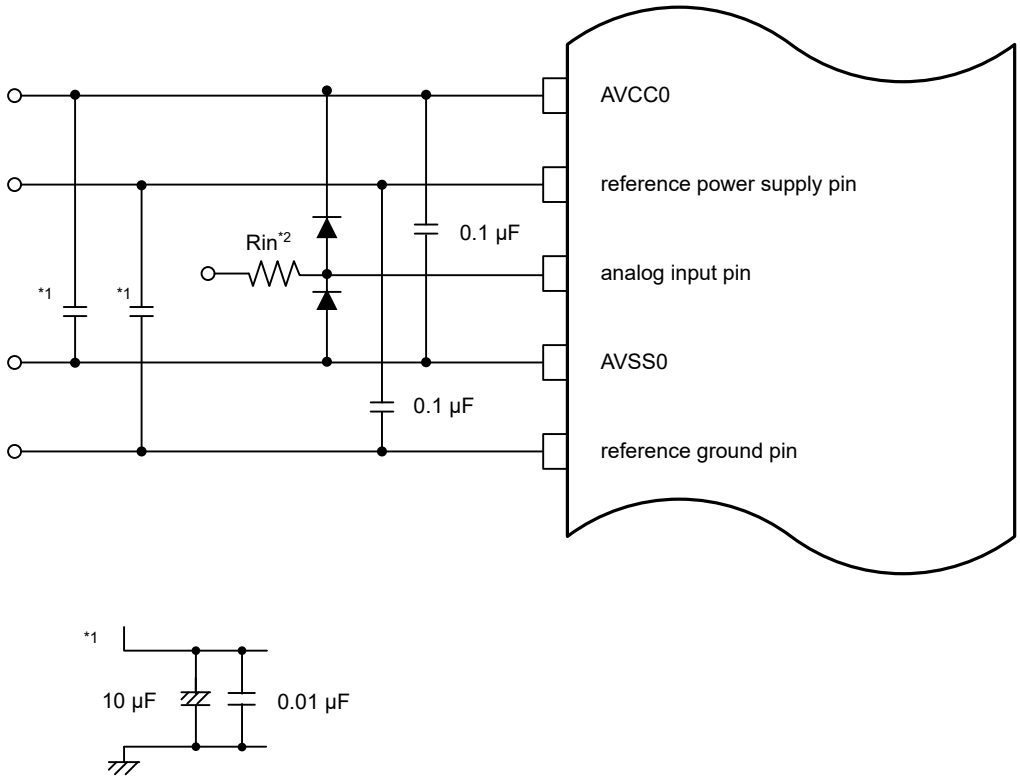

Note 1. The values shown here are reference values.
Note 2. Rin: Signal source impedance

Figure 35.33 Example protection circuit for analog inputs

35.8.13 Port Settings When Using the ADC12 Input

When using the high-precision channels, do not use PORT0 as general I/O. Renesas recommends that you do not use the digital output that is also used as the AD analog input if normal-precision channel is used. If the digital output that is also used as the AD analog input is used for output signals, perform A/D conversion several times, eliminate the maximum and minimum values, and obtain the average of the other results.

35.8.14 Notes on Canceling Software Standby Mode

After software standby mode is canceled, wait at least 1 μs after the stabilization time for the oscillator elapses and before starting A/D conversion. For details, see section 10, Low Power Modes

36. Temperature Sensor (TSN)

36.1 Overview

The on-chip Temperature Sensor (TSN) determines and monitors the die temperature for reliable operation of the device. The sensor outputs a voltage directly proportional to the die temperature, and the relationship between the die temperature and the output voltage is fairly linear. The output voltage is provided to the ADC12 for conversion and can be further used by the end application.

Table 36.1 lists the TSN specifications, and Figure 36.1 shows a block diagram.

Table 36.1 TSN specifications

Item	Description
Temperature sensor voltage output	Temperature sensor outputs a voltage to the 12-bit A/D converter

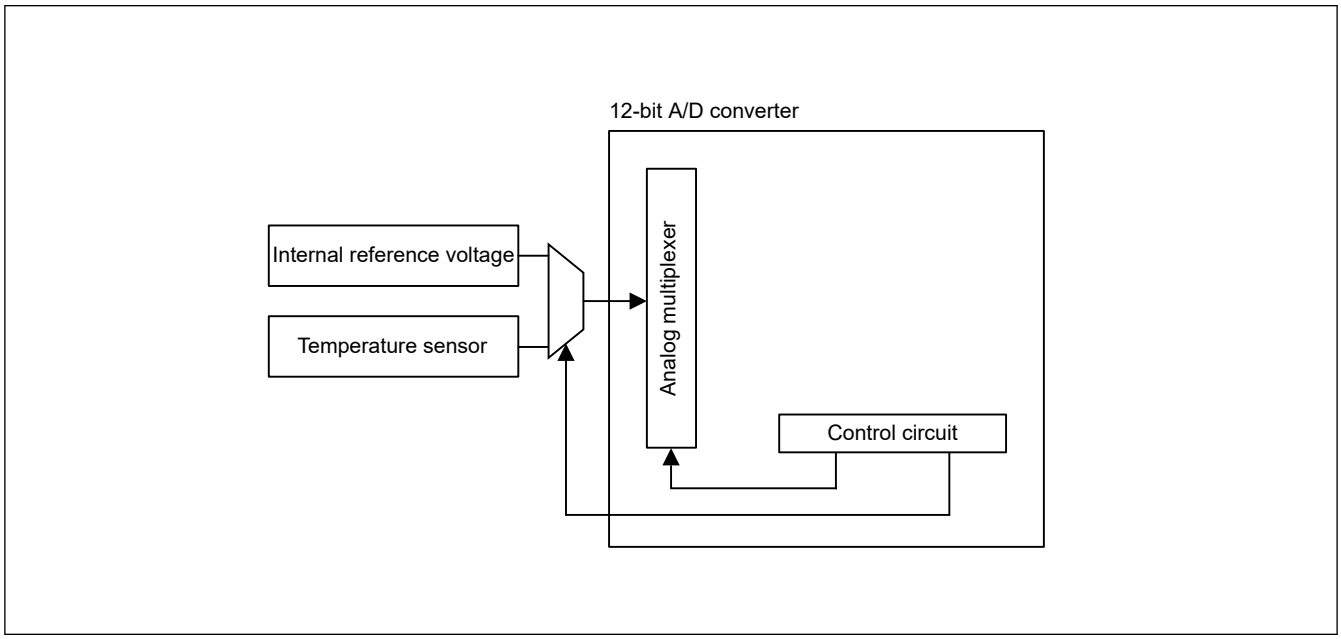

Figure 36.1 TSN block diagram

36.2 Register Descriptions

36.2.1 TSCDR : Temperature Sensor Calibration Data Register

Base address: FLCN = 0x407E_C000

Offset Address: 0x0228

Bit position:	15	14	13	12	11	10	9	8	7	6	5	4	3	2	1	0
Bit field:																
Value after reset:	Chip-specific value															

Bit	Symbol	Function	R/W
15:0	n/a	Temperature Sensor Calibration Data Chip-specific value	R

The TSCDR register stores temperature sensor calibration data measured for each chip at factory shipment.

Temperature sensor calibration data is the output voltage of the temperature sensor under the conditions Tj = 125°C and AVCC0 = 3.3 V converted to a digital value by the 12-bit A/D converter.

Temperature sensor calibration data is stored in the lower 12 bits of the TSCDR register.

36.2.2 TSCDRR : Temperature Sensor Calibration Data Register (Room Temperature)

Base address: FLCN = 0x407E_C000

Offset address: 0x022A

Bit position:	15	14	13	12	11	10	9	8	7	6	5	4	3	2	1	0
Bit field:																
Value after reset:	Chip-specific value															

Bit	Symbol	Function	R/W
15:0	n/a	Temperature Sensor Calibration Data Chip-specific value	R

The TSCDRR register stores temperature sensor calibration data measured for each chip at factory shipment.

Temperature sensor calibration data is the output voltage of the temperature sensor under the conditions Tj = 25 °C and AVCC0 = 3.3 V converted to a digital value by the 12-bit A/D converter.

Temperature sensor calibration data is stored in the lower 12 bits of the TSCDR register.

36.2.3 TSCDRL : Temperature Sensor Calibration Data Register (Low Temperature)

Base address: FLCN = 0x407E_C000

Offset address: 0x0350

Bit position:	15	14	13	12	11	10	9	8	7	6	5	4	3	2	1	0
Bit field:																
Value after reset:	Chip-specific value															

Bit	Symbol	Function	R/W
15:0	n/a	Temperature Sensor Calibration Data Chip-specific value	R

The TSCDRL register stores temperature sensor calibration data measured for each chip at factory shipment.

Temperature sensor calibration data is the output voltage of the temperature sensor under the conditions Tj = -43 °C and AVCC0 = 3.3 V converted to a digital value by the 12-bit A/D converter.

Temperature sensor calibration data is stored in the lower 12 bits of the TSCDRL register.

36.3 Using the Temperature Sensor

The temperature sensor outputs a voltage that varies with the temperature. This voltage is converted to a digital value by the 12-bit A/D converter. To obtain the die temperature, convert this value into the temperature.

36.3.1 Preparation for Using the Temperature Sensor

The ambient temperature (T) is proportional to the temperature sensor voltage output (Vs), so ambient temperature is calculated with the following formula:

T = (Vs - V1) / slope + T1

- T: Ambient temperature of MCU as calculation result (°C)
- Vs: Voltage output by the temperature sensor on temperature measurement (V)
- T1: Temperature experimentally measured at one point (°C)
- V1: Voltage output by the temperature sensor on measurement of T1 (V)
- T2: Temperature experimentally measured at a second point (°C)
- V2: Voltage output by the temperature sensor on measurement of T2 (V)
- Slope: Temperature gradient of the temperature sensor (V / °C), slope = (V2 - V1) / (T2 - T1)

Characteristics vary between sensors, so Renesas recommends measuring two different sample temperatures as follows:

1. Use the 12-bit A/D converter to measure the voltage V1 output by the temperature sensor at temperature T1.
2. Again use the 12-bit A/D converter to measure the voltage V2 output by the temperature sensor at a different temperature T2.
3. Obtain the temperature gradient (slope = (V2 - V1) / (T2 - T1)) from these results.
4. Subsequently, obtain temperatures by substituting the slope into the formula for the temperature characteristic (T = (Vs - V1) / slope + T1).

In order to make the temperature Ta and Tj as close as possible, perform the measurement with the power consumption of the MCU as low as possible.

If you are using the temperature gradient given in section 43, Electrical Characteristics, use the A/D converter to measure the voltage V1 output by the temperature sensor at temperature T1, then calculate the temperature characteristic using the following formula:

T = (Vs - V1) / slope + T1

Note: This method produces less accurate temperatures than measurement at two points.

In this MCU, the TSCDR, TSCDRR or TSCDRL registers store the temperature values (CAL125, CAL25 or CAL-43) of the temperature sensor measured under the condition Ta = Tj = 125 °C, Ta = Tj = 25 °C or Ta = Tj = -43 °C and AVCC0 = AVREFH0 = 3.3 V.

If you use this value as the sample measurement result at the first and second point, you can omit the preparation before using the temperature sensor.

CAL125 = TSCDR register value

CAL25 = TSCDRR register value

CAL-43 = TSCDRL register value

V1 is calculated from CAL125, CAL25 or CAL-43:

V1 = 3.3 × CAL125, CAL25 or CAL-43 / 4096 [V] (for 12-bit accuracy)

Using this value, the measured temperature can be calculated according to the following formula:

T = (Vs - V1) / slope + 125, 25 or -43 [°C]

- T: Ambient temperature of MCU as calculation result (°C)
- Vs: Voltage output by the temperature sensor when the temperature is measured (V)
- V1: Voltage output by the temperature sensor when Ta = Tj = 125, 25 or -43 °C and AVCC0 = AVREFH0 = 3.3 V (V)
- Slope: Temperature gradient of the temperature sensor[*1] / 1000 (V/°C)
  Slope can also be obtained by using TSCDR, TSCDRR or TSCDRL register value as the sample measurement result at the second point.

Note 1. See section 43, Electrical Characteristics

Regarding the characteristics of the 12-bit A/D converter, the typical values are used. See section 43.4. ADC12 Characteristics.

36.3.2 Procedures for Using the Temperature Sensor

For details, see section 35, 12-Bit A/D Converter (ADC12).

37. Data Operation Circuit (DOC)

37.1 Overview

The data operation circuit (DOC) is used to compare, add, and subtract 16 or 32-bit data. An interrupt can be generated when the following conditions apply.

- When the 16 or 32-bit compared values match the detection condition
- When the result of 16 or 32-bit data addition overflows
- When the result of 16 or 32-bit data subtraction underflows

Table 37.1 lists the data operation circuit specifications and Figure 37.1 shows a block diagram of the data operation circuit.

Table 37.1 DOC specifications

Item	Description
Data operation function	• 16 or 32-bit data comparison, comparison to detect data above or below thresholds, and window comparison • 16 or 32-bit data addition, and subtraction
Module-stop function	The module-stop state can be set to reduce power consumption.
Interrupts	• The compared values match the detection condition • The result of data addition is greater than 0xFFFF (DOCR.DOBW = 0) or 0xFFFF_FFFF (DOCR.DOBW = 1) • The result of data subtraction is less than 0x0000 (DOCR.DOBW = 0) or 0x0000_0000 (DOCR.DOBW = 1)
Event link function (output)	• The result of data comparison is consistent with detection condition • The result of data addition is greater than 0xFFFF (DOCR.DOBW = 0) or 0xFFFF_FFFF (DOCR.DOBW = 1) • The result of data subtraction is less than 0x0000 (DOCR.DOBW = 0) or 0x0000_0000 (DOCR.DOBW = 1)
TrustZone Filter	Security attribution can be set

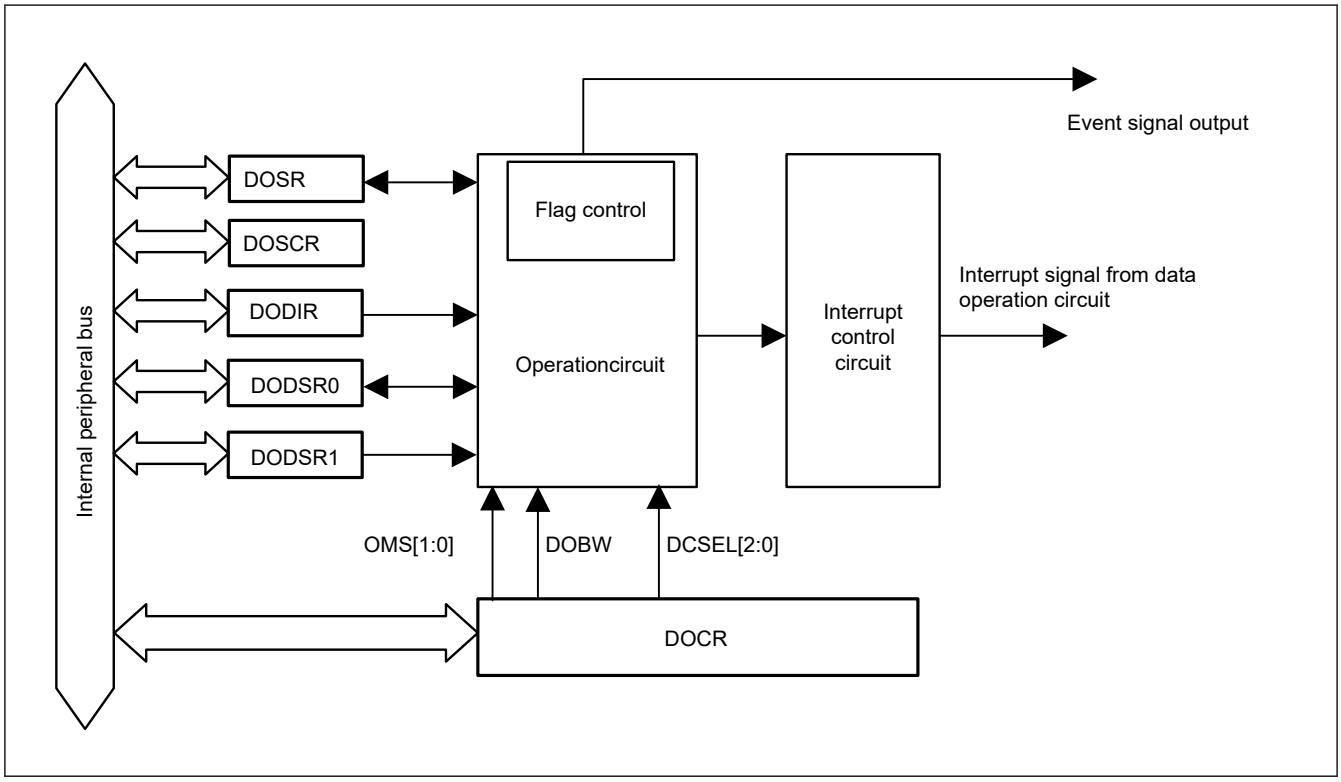

Figure 37.1 DOC block diagram

37.2 DOC Register Descriptions

37.2.1 DOCR : DOC Control Register

Base address: DOC_B = 0x4010_9000

Offset address: 0x00

Bit position:	7	6	5	4	3	2	1	0
Bit field:	—	DCSEL[2:0]			DOBW	—	OMS[1:0]	
Value after reset:	0	0	0	0	0	0	0	0

Bit	Symbol	Function	R/W
1:0	OMS[1:0]	Operating Mode Select 0 0: Data comparison mode 0 1: Data addition mode 1 0: Data subtraction mode 1 1: Setting prohibited	R/W
2	—	This bit is read as 0. The write value should be 0.	R/W
3	DOBW	Data Operation Bit Width Select 0: 16-bit 1: 32-bit	R/W
6:4	DCSEL[2:0]*1	Detection Condition Select 0 0 0: Mismatch (DODSR0 ≠ DODIR) 0 0 1: Match (DODSR0 = DODIR) 0 1 0: Lower (DODSR0 > DODIR) 0 1 1: Upper (DODSR0 < DODIR) 1 0 0: Inside window (DODSR0 < DODIR < DODSR1) 1 0 1: Outside window (DODIR < DODSR0, DODSR1 < DODIR) Others: Setting prohibited	R/W
7	—	This bit is read as 0. The write value should be 0.	R/W

Note: If the security attribution is configured as Secure:
- Secure access and Non-secure read access are allowed
- Non-secure write access is ignored, and TrustZone access error is not generated.

If the security attribution is configured as Non-secure:
- Secure and Non-secure access are allowed.

Note 1. Valid only when data comparison mode is selected.

The DOCR is a register which can set the operation mode of data operation circuit and interrupt enable/disable.

OMS[1:0] bits (Operating Mode Select)

These bits select the operating mode of the data operation circuit.

DOBW bit (Data Operation Bit Width Select)

This bit selects the bit width of data operation.

DCSEL[2:0] bits (Detection Condition Select)

These bits are valid only when data comparison mode is selected.

These bits select the condition for detection in data comparison mode.

37.2.2 DOSR : DOC Flag Status Register

Base address: DOC_B = 0x4010_9000

Offset address: 0x04

Bit position:	7	6	5	4	3	2	1	0
Bit field:	—	—	—	—	—	—	—	DOPCF
Value after reset:	0	0	0	0	0	0	0	0

Bit	Symbol	Function	R/W
0	DOPCF	Data Operation Circuit Flag Indicates the result of an operation.	R
7:1	—	These bits are read as 0.	R

Note: If the security attribution is configured as Secure:
- Secure access and Non-secure read access are allowed
- Non-secure write access is ignored, and TrustZone access error is not generated.

If the security attribution is configured as Non-secure:
- Secure and Non-secure access are allowed.

The DOSR register indicates the status of the data operation.

DOPCF flag (Data Operation Circuit Flag)

[Setting conditions]

- DOCR.OMS[1:0] bits = 00b (Data comparison mode): The compared value matches the detection condition selected by DOCR.DCSEL[2:0] bits
- DOCR.OMS[1:0] bits = 01b (Data addition mode): The result of data addition is greater than 0xFFFF (DOCR.DOBW = 0) or 0xFFFF_FFFF (DOCR.DOBW = 1)
- DOCR.OMS[1:0] bits = 10b (Data subtraction mode): The result of data subtraction is less than 0x0000 (DOCR.DOBW = 0) or 0x0000_0000 (DOCR.DOBW = 1)

[Clearing condition]

- Writing 1 to the DOSCR.DOPCFCL bit

37.2.3 DOSCR : DOC Flag Status Clear Register

Base address: DOC_B = 0x4010_9000

Offset address: 0x08

Bit position:	7	6	5	4	3	2	1	0
Bit field:	—	—	—	—	—	—	—	DOPCFCL
Value after reset:	0	0	0	0	0	0	0	0

Bit	Symbol	Function	R/W
0	DOPCFCL	DOPCF Clear 0: Maintains the DOPCF flag state. 1: Clears the DOPCF flag.	W
7:1	—	The write value should be 0.	W

Note: If the security attribution is configured as Secure:
- Secure access and Non-secure read access are allowed
- Non-secure write access is ignored, and TrustZone access error is not generated.

If the security attribution is configured as Non-secure:
- Secure and Non-secure access are allowed.

The DOSCR is a register which can clear the status of data operation. This register is read as 0x00.

DOPCFCL bit (DOPCF Clear)

Setting this bit to 1 clears the DOPCF flag.

37.2.4 DODIR : DOC Data Input Register

Base address: DOC_B = 0x4010_9000

Offset address: 0x0C

Bit position:	31																														0
Bit field:																															
Value after reset:	0	0	0	0	0	0	0	0	0	0	0	0	0	0	0	0	0	0	0	0	0	0	0	0	0	0	0	0	0	0	0

Bit	Symbol	Function	R/W
31:0	n/a	It stores data used in the operations. Access the DODIR with the bit width of data operation selected by the DOCR.DOBW bit.	R/W

Note: If the security attribution is configured as Secure:
- Secure access and Non-secure read access are allowed
- Non-secure write access is ignored, and TrustZone access error is not generated.

If the security attribution is configured as Non-secure:
- Secure and Non-secure access are allowed.

37.2.5 DODSR0 : DOC Data Setting Register 0

Base address: DOC_B = 0x4010_9000

Offset address: 0x10

Bit position:	31																														0
Bit field:																															
Value after reset:	0	0	0	0	0	0	0	0	0	0	0	0	0	0	0	0	0	0	0	0	0	0	0	0	0	0	0	0	0	0	0

Bit	Symbol	Function	R/W
31:0	n/a	Access the DODSR0 with the bit width of data operation selected by the DOCR.DOBW bit. This register stores data for use as a reference in data comparison mode. When selecting window comparison (DOCR.DCSEL[2:0] = 100b, 101b), set a value less than DODSR1 (DODSR1 > DODSR0). This register also stores the results of operations in data addition and data subtraction modes.	R/W

Note: If the security attribution is configured as Secure:
- Secure access and Non-secure read access are allowed
- Non-secure write access is ignored, and TrustZone access error is not generated.

If the security attribution is configured as Non-secure:
- Secure and Non-secure access are allowed.

37.2.6 DODSR1 : DOC Data Setting Register 1

Base address: DOC_B = 0x4010_9000

Offset address: 0x14

Bit position:	31																														0
Bit field:																															
Value after reset:	0	0	0	0	0	0	0	0	0	0	0	0	0	0	0	0	0	0	0	0	0	0	0	0	0	0	0	0	0	0	0

Bit	Symbol	Function	R/W
31:0	n/a	Access the DODSR1 with the bit width of data operation selected by the DOCR.DOBW bit. This register stores data for use as a reference in data comparison mode. When selecting window comparison (DOCR.DCSEL[2:0] = 100b, 101b), set a value greater than DODSR0 (DODSR1 > DODSR0). This register is only used for window comparisons.	R/W

Note: If the security attribution is configured as Secure:
- Secure access and Non-secure read access are allowed
- Non-secure write access is ignored, and TrustZone access error is not generated.

If the security attribution is configured as Non-secure:
- Secure and Non-secure access are allowed.

37.3 Operation

37.3.1 Data Comparison Mode

Figure 37.2 to Figure 37.7 shows an example of the steps involved in data comparison mode operation by the data operation circuit.

The following is an example of operation when the bit width of data operation is 32-bit.

1. Writing 00b to the DOCR.OMS[1:0] bits selects data comparison mode, and setting the DOCR.DCSEL[2:0] to selects detection condition.
2. The 32-bit reference data is set in DODSR0 and DODSR1.[*1]
3. 32-bit data for comparison is written to DODIR.
4. If a value written to DODIR match the detection condition set by DOCR.DCSEL[2:0], the DOCR.DOPCF flag is set to 1 and an ELC event and a data operation circuit interrupt are generated.

Note: The comparison operation is executed only by writing to the DODIR

Note 1. The DODSR1 register setting is required only when window comparison is selected. Set a value greater than DODSR0 (DODSR1 > DODSR0).

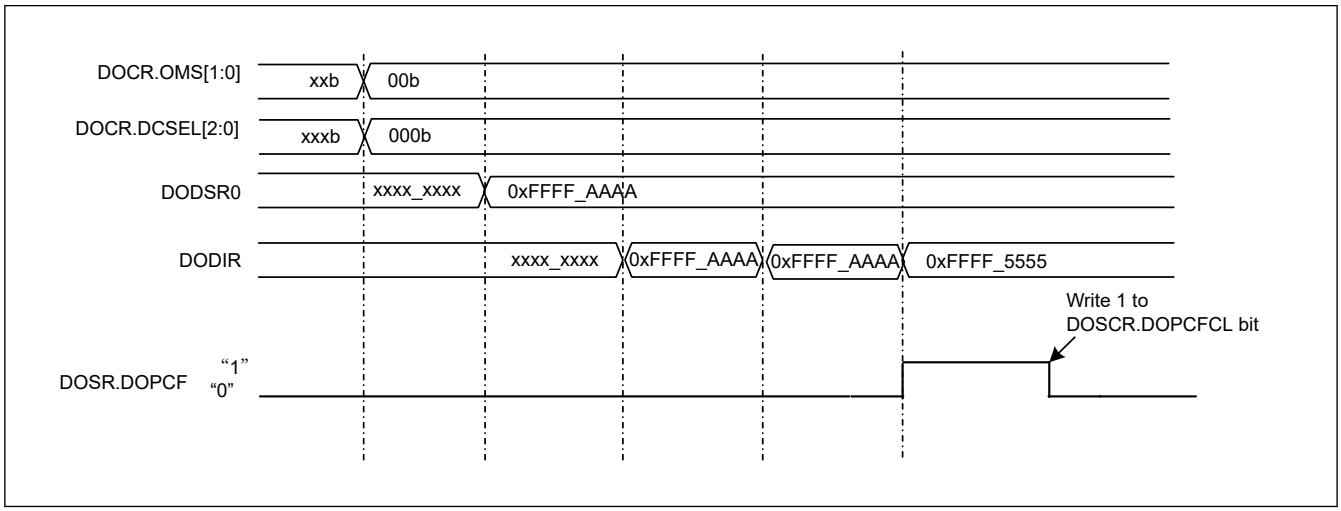

Figure 37.2 Example of Operation in Data Comparison Mode (Detection condition: Mismatch)

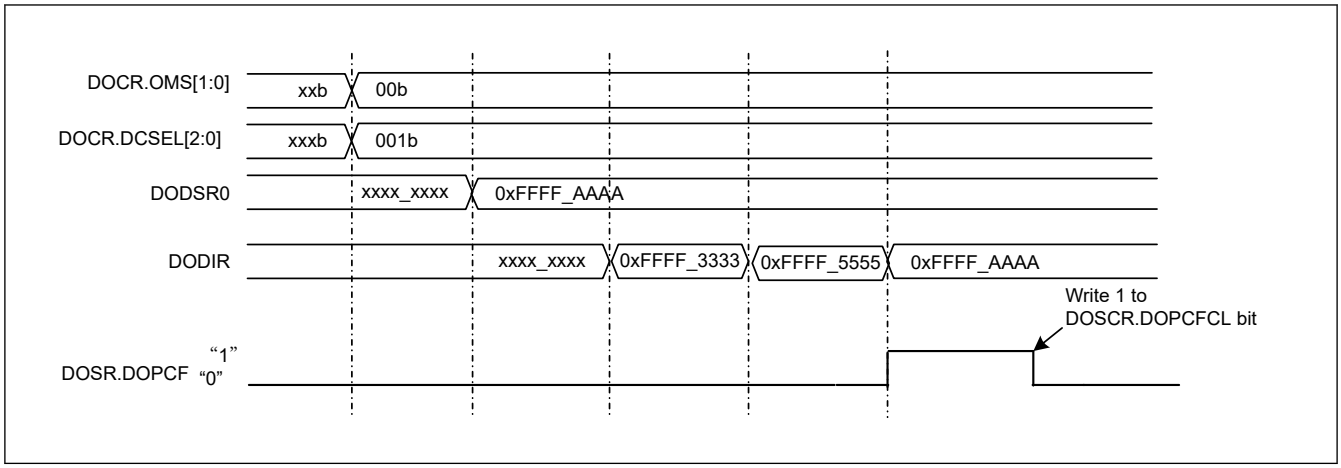

Figure 37.3 Example of Operation in Data Comparison Mode (Detection condition: Match)

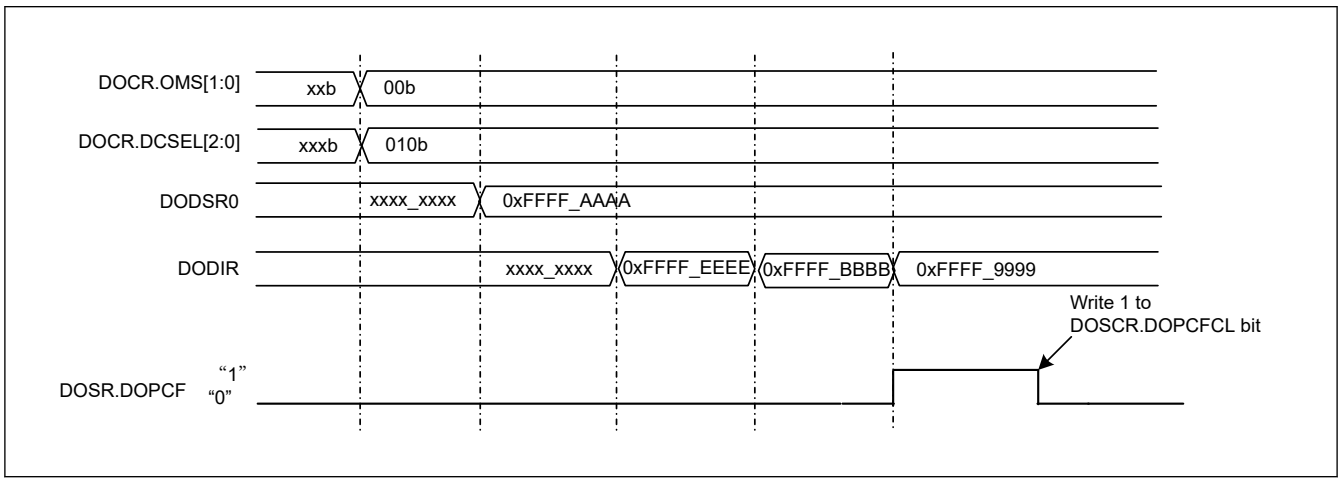

Figure 37.4 Example of Operation in Data Comparison Mode (Detection condition: Lower)

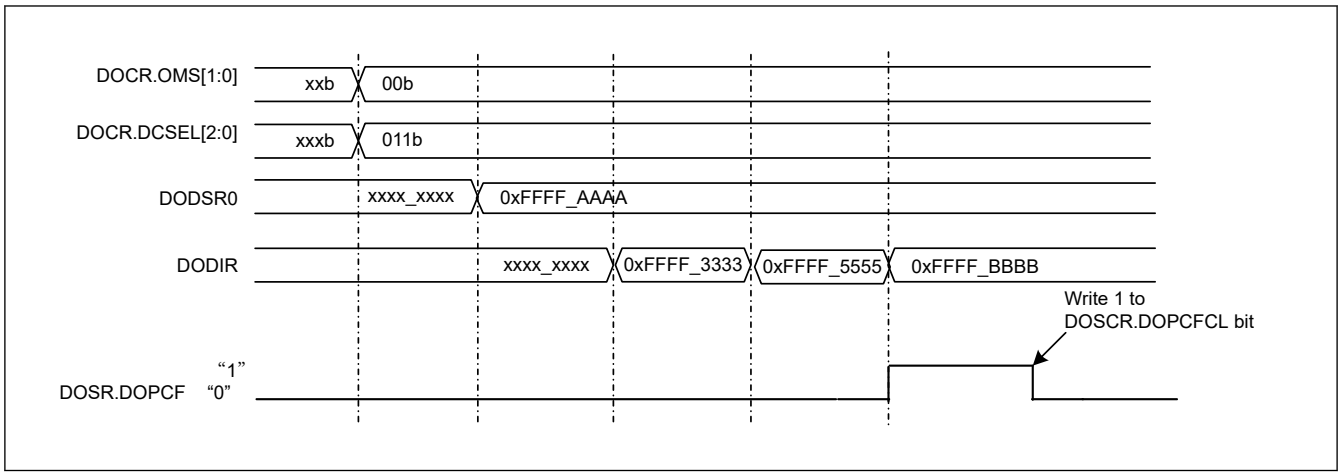

Figure 37.5 Example of Operation in Data Comparison Mode (Detection condition: Upper)

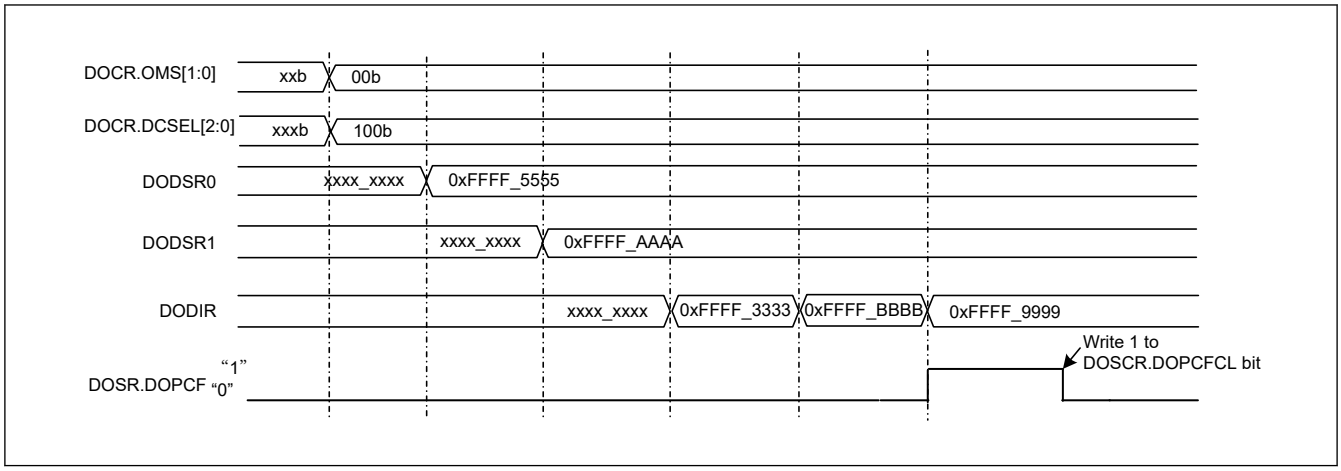

Figure 37.6 Example of Operation in Data Comparison Mode (Detection condition: Inside window)

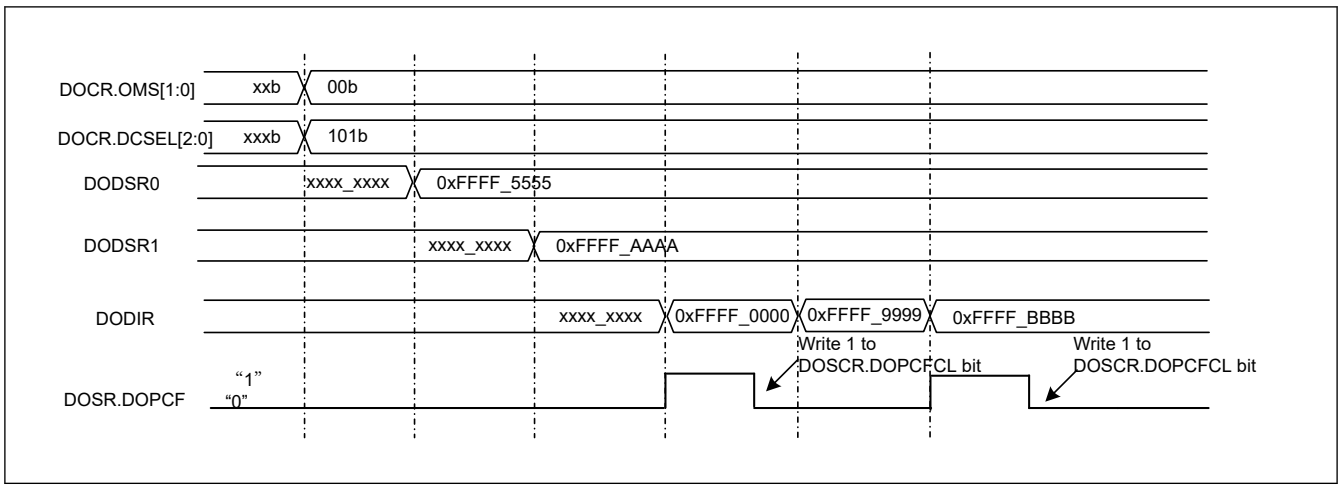

Figure 37.7 Example of Operation in Data Comparison Mode (Detection condition: Outside window)

37.3.2 Data Addition Mode

Figure 37.8 shows an example of the steps involved in data addition mode [*1] operation by the data operation circuit.

The following is an example of operation when the bit width of data operation is 32-bit.

1. Writing 01b to the DOCR.OMS[1:0] bits selects data addition mode.
2. 32-bit data is set in the DODSR0 register as the initial value.
3. 32-bit data to be added is written to DODIR. The result of the operation is stored in DODSR0.
4. Writing of 32-bit data continues until all data for addition have been written to DODIR.
5. If the result of an operation is greater than 0xFFFF_FFFF, the DOSR.DOPCF flag is set to 1 and an ELC event and a data operation circuit interrupt are generated.

Note 1. Addition is executed only by writing to the DODIR.

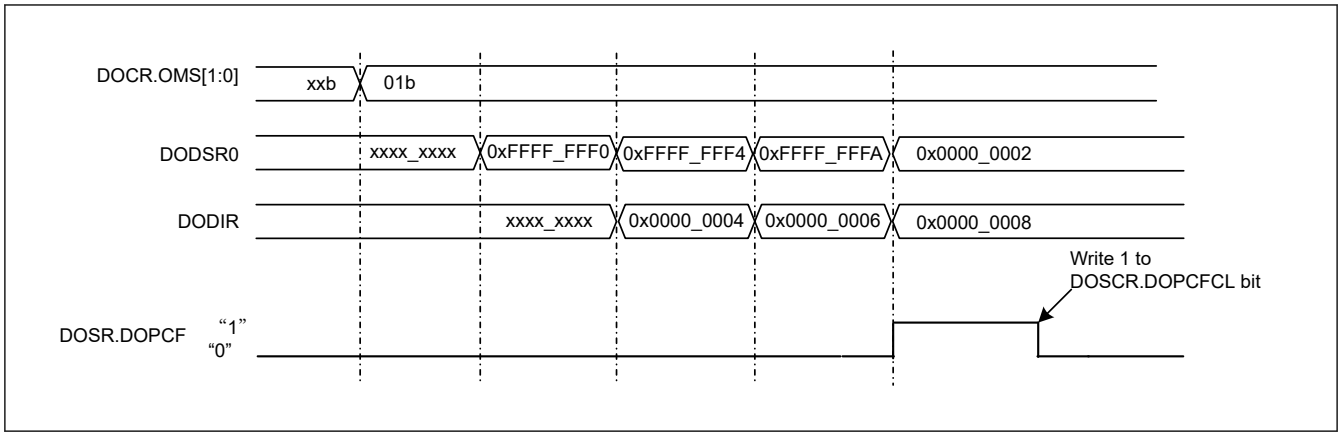

Figure 37.8 Example of Operation in Data Addition Mode

37.3.3 Data Subtraction Mode

Figure 37.9 shows an example of the steps involved in data subtraction mode [*1] operation by the data operation circuit.

The following is an example of operation when the bit width of data operation is 32-bit.

1. Writing 10b to the DOCR.OMS[1:0] bits selects data subtraction mode.
2. 32-bit data is set in the DODSR0 register as the initial value.
3. 32-bit data to be subtracted is written to DODIR. The result of the operation is stored in DODSR0.
4. Writing of 32-bit data continues until all data for subtraction have been written to DODIR.
5. If the result of an operation is less than 0x0000_0000, the DOSR.DOPCF flag is set to 1 and an ELC event and a data operation circuit interrupt are generated.

Note 1. Subtraction is executed only by writing to the DODIR.

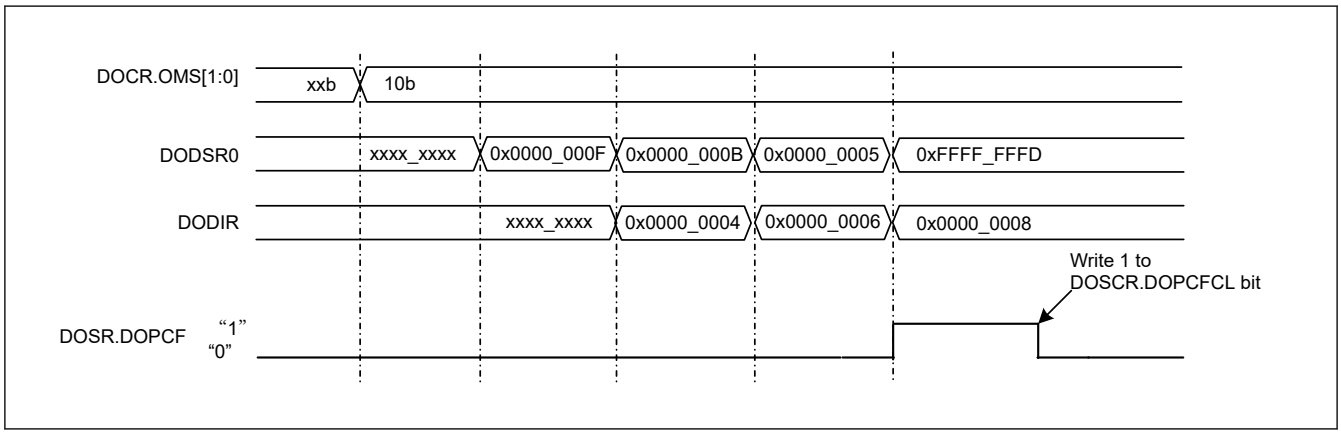

Figure 37.9 Example of Operation in Data Subtraction Mode

37.4 Interrupt Source

The data operation circuit generates the data operation circuit interrupt (DOC_DOPCI) as an interrupt request. When an interrupt source is generated, the data operation circuit flag corresponding to the interrupt is set to 1, and then interrupt request signal is generated. Table 37.2 describes the interrupt request.

Table 37.2 Interrupt request from DOC

Interrupt request	Status flag	Interrupt source
DOC interrupt	DOPCF	● The compared values match the detection condition. ● The result of data addition is greater than 0xFFFF (DOCR.DOBW = 0) or 0xFFFF_FFFF (DOCR.DOBW = 1). ● The result of data subtraction is less than 0x0000 (DOCR.DOBW = 0) or 0x0000_0000 (DOCR.DOBW = 1).

37.5 Event Link Output

The DOC outputs event signals for the event link controller (ELC) under the following conditions, and these can be used to initiate operations by other modules selected in advance.

- The compared values match the detection condition
- The data addition result is greater than 0xFFFF (DOCR.DOBW = 0) or 0xFFFF_FFFF (DOCR.DOBW = 1)
- The data subtraction result is less than 0x0000 (DOCR.DOBW = 0) or 0x0000_0000 (DOCR.DOBW = 1)

37.6 Interrupt Handling and Event Linking

The DOC has a bit to enable or disable interrupts. An interrupt request signal is output for the CPU when an interrupt source is generated while the corresponding enable bit is enabled.

In contrast, an event link output signal is sent to other modules as an event signal via the ELC when an interrupt source is generated, regardless of the setting of the corresponding interrupt enable bit.

37.7 Usage Notes

37.7.1 Settings for the Module-Stop State

The module Stop Control Register C (MSTPCRC) can enable or disable DOC operation. The DOC is initially stopped after reset. Releasing the module-stop state enables access to the registers. For details, see section 10, Low Power Modes.

38. SRAM

38.1 Overview

The MCU provides an on-chip, high-density SRAM module with either parity-bit checking or Error Correction Code (ECC).The first 32 KB area of the SRAM0 is the ECC. Parity check is performed on the other areas.

Table 38.1 lists the SRAM specifications.

Table 38.1 SRAM specifications

Parameter	Without ECC	With ECC
SRAM capacity	SRAM0: 64 KB	SRAM0: 32 KB
SRAM address	SRAM0: 0x2000_8000 to 0x2001_7FFF	SRAM0: 0x2000_0000 to 0x2000_7FFF
Access	Can access with no wait. For details, see section 38.3.8. Number of Access Cycles to SRAM	
Module-stop function	Module-stop state can be set to reduce power consumption	
Parity	Even parity with 8-bit data and 1-bit parity	No parity
Error checking	Even parity (data: 8 bits, parity: 1 bit)	SEC-DED (Single-Error Correction and Double-Error Detection Code)
Security	TrustZone Filter is integrated for memory access and SFR access. Access to the memory space is controlled by setting the memory Security Attribution (SA). And, access to I/O space (SFR) space is controlled by setting the register SA. See section 38.3.6. TrustZone Filter Function.	

38.2 Register Descriptions

38.2.1 SRAMSAR : SRAM Security Attribution Register

Base address: CPSCU = 0x4000_8000

Offset address: 0x10

Bit position:	31	30	29	28	27	26	25	24	23	22	21	20	19	18	17	16
Bit field:	—	—	—	—	—	—	—	—	—	—	—	—	—	—	—	—
Value after reset:	1	1	1	1	1	1	1	1	1	1	1	1	1	1	1	1

Bit position:	15	14	13	12	11	10	9	8	7	6	5	4	3	2	1	0
Bit field:	—	—	—	—	—	—	—	—	—	—	—	—	—	SRAMSA2	—	SRAMSA0
Value after reset:	1	1	1	1	1	1	1	1	1	1	1	1	1	1	1	1

Bit	Symbol	Function	R/W
0	SRAMSA0	Security attributes of registers for SRAM Protection 0: Secure 1: Non-Secure	R/W
1	—	This bit is read as 1. The write value should be 1.	R/W
2	SRAMSA2	Security attributes of registers for ECC Relation 0: Secure 1: Non-Secure	R/W
31:3	—	These bits are read as 1. The write value should be 1.	R/W

Note: Only Secure access can write to this register. Both Secure access and Non-secure read access are allowed but Non-secure write access is not allowed and TrustZone access error is not generated.

Note: This register is write-protected by PRCR register.

SRAMSA0 bit (Security attributes of registers for SRAM Protection)

Security attributes of registers for SRAM protection. The target registers are as follows:

- PARIOAD
- SRAMPRCR

SRAMSA2 bit (Security attributes of registers for ECC Relation)

Security attributes of registers for ECC Relation. The target registers are as follows:

- ECCMODE
- ECC2STS
- ECC1STSEN
- ECC1STS
- ECCPRCR
- ECCPRCR2
- ECCETST
- ECCOAD

38.2.2 PARIOAD : SRAM Parity Error Operation After Detection Register

Base address: SRAM = 0x4000_2000

Offset address: 0x00

Bit position:	7	6	5	4	3	2	1	0
Bit field:	—	—	—	—	—	—	—	OAD
Value after reset:	0	0	0	0	0	0	0	0

Bit	Symbol	Function	R/W
0	OAD	Operation After Detection 0: Non-maskable interrupt 1: Reset	R/W
7:1	—	These bits are read as 0. The write value should be 0.	R/W

Note: If the security attribution is configured as Secure:
- Secure access and Non-secure read access are allowed
- Non-secure write access is ignored, and TrustZone access error is not generated.

If the security attribution is configured as Non-secure:
- Secure and Non-secure access are allowed.

The PARIOAD register controls the operation on detection of a parity error. The SRAM Protection Register (SRAMPRCR) protects this register against writes. Always set the SRAMPRCR bit in SRAMPRCR to 1 before writing to this bit. Do not write to the PARIOAD register while accessing the SRAM.

OAD bit (Operation After Detection)

The OAD bit specifies the generation of either a reset or non-maskable interrupt when a parity error is detected. The OAD bit is commonly used for SRAM0 (without ECC).

38.2.3 SRAMPRCR : SRAM Protection Register

Base address: SRAM = 0x4000_2000

Offset address: 0x04

Bit position:	7						1	0
Bit field:	KW[6:0]							SRAM PRCR
Value after reset:	0	0	0	0	0	0	0	0

Bit	Symbol	Function	R/W
0	SRAMPRCR	Register Write Control 0: Disable writes to protected registers 1: Enable writes to protected registers	R/W
7:1	KW[6:0]	Write Key Code These bits enable or disable writes to the SRAMPRCR bit	W

Note: If the security attribution is configured as Secure:
- Secure access and Non-secure read access are allowed
- Non-secure write access is ignored, and TrustZone access error is not generated.

If the security attribution is configured as Non-secure:
- Secure and Non-secure access are allowed.

SRAMPRCR bit (Register Write Control)

The SRAMPRCR bit controls the write mode of the PARIOAD register. Setting the bit to 1 enables writes to the PARIOAD register. When you write to this bit, always write 0x78 to KW[6:0] bits simultaneously.

KW[6:0] bits (Write Key Code)

The KW[6:0] bits enable or disable writes to the SRAMPRCR bit. When you write to the SRAMPRCR bit, always write 0x78 to these bits simultaneously. When a value other than 0x78 is written to KW[6:0], the SRAMPRCR bit is not updated. The KW[6:0] bits are always read as 0x00.

38.2.4 ECCMODE : ECC Operating Mode Control Register

Base address: SRAM = 0x4000_2000

Offset address: 0xC0

Bit position:	7	6	5	4	3	2	1	0
Bit field:	—	—	—	—	—	—	ECCMOD[1:0]	
Value after reset:	0	0	0	0	0	0	0	0

Bit	Symbol	Function	R/W
1:0	ECCMOD[1:0]	ECC Operating Mode Select 0 0: Disable ECC function 0 1: Setting prohibited 1 0: Enable ECC function without error checking 1 1: Enable ECC function with error checking	R/W
7:2	—	These bits are read as 0. The write value should be 0.	R/W

Note: If the security attribution is configured as Secure:
- Secure access and Non-secure read access are allowed
- Non-secure write access is ignored, and TrustZone access error is not generated.

If the security attribution is configured as Non-secure:
- Secure and Non-secure access are allowed.

The ECCMODE register specifies the ECC operating mode. The ECC Protection Register (ECCPRCR) protects this register against writes. Before writing to this register, set the ECCPRCR bit in the ECCPRCR register to 1 (write protection disabled). Do not write to the ECCMODE register while accessing the SRAM.

ECCMOD[1:0] bits (ECC Operating Mode Select)

The ECCMOD[1:0] bits set the access mode to the ECC area in SRAM0.

38.2.5 ECC2STS : ECC 2-Bit Error Status Register

Base address: SRAM = 0x4000_2000

Offset address: 0xC1

Bit position:	7	6	5	4	3	2	1	0
Bit field:	—	—	—	—	—	—	—	ECC2 ERR
Value after reset:	0	0	0	0	0	0	0	0

Bit	Symbol	Function	R/W
0	ECC2ERR	ECC 2-Bit Error Status 0: No 2-bit ECC error occurred 1: 2-bit ECC error occurred	R/W*1
7:1	—	These bits are read as 0. The write value should be 0.	R/W

Note: If the security attribution is configured as Secure:
- Secure access and Non-secure read access are allowed
- Non-secure write access is ignored, and TrustZone access error is not generated.

If the security attribution is configured as Non-secure:
- Secure and Non-secure access are allowed.

Note 1. Only 0 can be written to clear the bit.

ECC2ERR bit (ECC 2-Bit Error Status)

The ECC2ERR bit indicates whether a 2-bit ECC error occurred in the ECC area of SRAM0. When a 2-bit error is detected while ECC operations are enabled and error checking is selected, theECC2ERR bit is set to 1. The SRAM error signal is also asserted at this time. The 2-bit ECC error can be cleared by writing 0 to the ECC2ERR bit.

The SRAM error can be specified as a non-maskable interrupt or a reset in the ECCOAD register. Do not access the ECC area in SRAM0 while writing 0 to this register.

38.2.6 ECC1STSEN : ECC 1-Bit Error Information Update Enable Register

Base address: SRAM = 0x4000_2000

Offset address: 0xC2

Bit position:	7	6	5	4	3	2	1	0
Bit field:	—	—	—	—	—	—	—	E1STS EN
Value after reset:	0	0	0	0	0	0	0	0

Bit	Symbol	Function	R/W
0	E1STSEN	ECC 1-Bit Error Information Update Enable 0: Disable updating of 1-bit ECC error information 1: Enable updating of 1-bit ECC error information	R/W
7:1	—	These bits are read as 0. The write value should be 0.	R/W

Note: If the security attribution is configured as Secure:
- Secure access and Non-secure read access are allowed
- Non-secure write access is ignored, and TrustZone access error is not generated.

If the security attribution is configured as Non-secure:
- Secure and Non-secure access are allowed.

The ECC1STSEN register enables or disables updating of the ECC 1-bit Error Status Register (ECC1STS) in response to a 1-bit error ECC error in the SRAM0 (ECC area).

The ECC Protection Register (ECCPRCR) protects this register against writes. Before writing to this bit, set the ECCPRCR bit in the ECCPRCR register to 1 (write protection disabled).

E1STSEN bit (ECC 1-Bit Error Information Update Enable)

The E1STSEN bit enables or disables updating of the SRAM (ECC area) 1-Bit Error Status Register (ECC1STS) in response to a 1-bit error in the ECC area of SRAM0. This register also functions as an interrupt or a reset mask.

38.2.7 ECC1STS : ECC 1-Bit Error Status Register

Base address: SRAM = 0x4000_2000

Offset address: 0xC3

Bit position:	7	6	5	4	3	2	1	0
Bit field:	—	—	—	—	—	—	—	ECC1ERR
Value after reset:	0	0	0	0	0	0	0	0

Bit	Symbol	Function	R/W
0	ECC1ERR	ECC 1-Bit Error Status 0: No 1-bit ECC error occurred 1: 1-bit ECC error occurred	R/(W)*1
7:1	—	These bits are read as 0. The write value should be 0.	R/W

Note: If the security attribution is configured as Secure:
- Secure access and Non-secure read access are allowed
- Non-secure write access is ignored, and TrustZone access error is not generated.

If the security attribution is configured as Non-secure:
- Secure and Non-secure access are allowed.

Note 1. Only 0 can be written to clear the bit.

ECC1ERR bit (ECC 1-Bit Error Status)

The ECC1ERR bit indicates whether a 1-bit ECC error occurred in the ECC area of SRAM0. When a 1-bit error is detected while ECC operations are enabled and error checking is selected, theECC1ERR bit is set to 1. The SRAM error signal is also asserted at this time. The 1-bit ECC error can be cleared by writing 0 to the ECC1ERR bit.

The SRAM error can be specified as a non-maskable interrupt or a reset in the ECCOAD register. Do not access the ECC area in SRAM0 while writing 0 to this register.

38.2.8 ECCPRCR : ECC Protection Register

Base address: SRAM = 0x4000_2000

Offset address: 0xC4

Bit position:	7	6	5	4	3	2	1	0
Bit field:	KW[6:0]							ECCPRCR
Value after reset:	0	0	0	0	0	0	0	0

Bit	Symbol	Function	R/W
0	ECCPRCR	Register Write Control 0: Disable writes to the protected registers 1: Enable writes to the protected registers	R/W
7:1	KW[6:0]	Write Key Code 0x78: Enable write to the ECCPRCR bit Others: Disable write to the ECCPRCR bit	W

Note: If the security attribution is configured as Secure:
- Secure access and Non-secure read access are allowed
- Non-secure write access is ignored, and TrustZone access error is not generated.

If the security attribution is configured as Non-secure:
- Secure and Non-secure access are allowed.

ECCPRCR bit (Register Write Control)

The ECCPRCR bit controls the write of the ECCMODE, ECC1STSEN, and ECCOAD registers. When this bit is set to 1, writing to the ECCMODE, ECC1STSEN, and ECCOAD registers is enabled. When writing to this bit, write 0x78 to the KW[6:0] bits at the same time.

KW[6:0] bits (Write Key Code)

The KW[6:0] bits enable or disable writes to the ECCPRCR bit. When writing toECCPRCR bit, write 0x78 to the KW[6:0] bits at the same time. When a value other than 0x78 is written to theKW[6:0] bits, the ECCPRCR bit is not updated. The KW[6:0] bits are always read as 0x00.

38.2.9 ECCPRCR2 : ECC Protection Register 2

Base address: SRAM = 0x4000_2000

Offset address: 0xD0

Bit position:	7	6	5	4	3	2	1	0
Bit field:	KW2[6:0]							ECCPRCR2
Value after reset:	0	0	0	0	0	0	0	0

Bit	Symbol	Function	R/W
0	ECCPRCR2	Register Write Control 0: Disable writes to the protected registers 1: Enable writes to the protected registers	R/W
7:1	KW2[6:0]	Write Key Code 0x78: Enable write to the ECCPRCR2 bit Others: Disable write to the ECCPRCR2 bit	W

Note: If the security attribution is configured as Secure:
- Secure access and Non-secure read access are allowed
- Non-secure write access is ignored, and TrustZone access error is not generated.

If the security attribution is configured as Non-secure:
- Secure and Non-secure access are allowed.

ECCPRCR2 bit (Register Write Control)

The ECCPRCR2 bit controls the write mode of the ECCETST register. When the ECCPRCR2 bit is set to 1, writes to the ECCETST register is enabled. When writing to this bit, write 0x78 to the KW2[6:0] bits at the same time.

KW2[6:0] bits (Write Key Code)

The KW2[6:0] bits enable or disable writes to the ECCPRCR2 bit. When writing to ECCPRCR2 bit, write 0x78 to the KW2[6:0] bits at the same time. When a value other than 0x78 is written to the KW2[6:0] bits, the ECCPRCR2 bit is not updated. The KW2[6:0] bits are always read as 0x00.

38.2.10 ECCETST : ECC Test Control Register

Base address: SRAM = 0x4000_2000

Offset address: 0xD4

Bit position:	7	6	5	4	3	2	1	0
Bit field:	—	—	—	—	—	—	—	TSTBYP
Value after reset:	0	0	0	0	0	0	0	0

Bit	Symbol	Function	R/W
0	TSTBYP	ECC Bypass Select 0: Disable ECC bypass 1: Enable ECC bypass	R/W

Bit	Symbol	Function	R/W
7:1	—	These bits are read as 0. The write value should be 0.	R/W

Note: If the security attribution is configured as Secure:
- Secure access and Non-secure read access are allowed
- Non-secure write access is ignored, and TrustZone access error is not generated.

If the security attribution is configured as Non-secure:
- Secure and Non-secure access are allowed.

The ECC Protection Register 2 (ECCPRCR2) protects this register against writes. Before writing to this bit, set the ECCPRCR2 bit in the ECCPRCR2 register to 1 (write protection disabled). Do not write to the ECCETST register while accessing the SRAM.

TSTBYP bit (ECC Bypass Select)

The TSTBYP bit enables direct access to the ECC code by bypassing the ECC function. When the ECC bypass function is used, the ECCMOD[1:0] bits in the ECCMODE register are set to 00b. The ECC must be accessed in 32 bits using the same address for 32-bit data. The ECC code is assigned to the lower 7 bits of the 32-bit data. When writing the ECC code, the upper 25 bits are ignored. When reading the ECC code, the upper 25 bits are undefined.

Note: For details of ECC test, see section 38.3.4. ECC Decoder Testing.

38.2.11 ECCOAD : SRAM ECC Error Operation After Detection Register

Base address: SRAM = 0x4000_2000

Offset address: 0xD8

Bit position:	7	6	5	4	3	2	1	0
Bit field:	—	—	—	—	—	—	—	OAD
Value after reset:	0	0	0	0	0	0	0	0

Bit	Symbol	Function	R/W
0	OAD	Operation After Detection 0: Non-maskable interrupt 1: Reset	R/W
7:1	—	These bits are read as 0. The write value should be 0.	R/W

Note: If the security attribution is configured as Secure:
- Secure access and Non-secure read access are allowed
- Non-secure write access is ignored, and TrustZone access error is not generated.

If the security attribution is configured as Non-secure:
- Secure and Non-secure access are allowed.

The ECC Protection Register (ECCPRCR) protects this register against writes. Before writing to this bit, set the ECCPRCR bit in the ECCPRCR register to 1 (write protection disabled). Do not write to the ECCOAD register while accessing the SRAM.

OAD bit (Operation After Detection)

The OAD bit selects whether to generate a reset or a non-maskable interrupt when an ECC error is detected. The OAD bit in the ECCOAD register is used for SRAM0 (ECC area).

38.3 Operation

38.3.1 Module Stop Function

Power consumption can be reduced by setting module stop control register A (MSTPCRA) to stop supply of the clock signal to SRAM.

SRAM0 is controlled by SRAM0 bit in MSTPCRA register and, in the case of 1, SRAM0 becomes the clock stop state.

The SRAM is thus placed in the module-stop state by stopping supply of the clock signals. The SRAM operates after a reset.

SRAM is not accessible if it is in the module-stop state. A transition to the module-stop state should not be made while access to SRAM is in progress.

Access to the SRAM in the module-stop state is prohibited. If access is attempted, correct operation is not guaranteed.

For details on the MSTPCRA register, see section 10, Low Power Modes.

38.3.2 Correction of ECC Errors

Enabling and disabling of ECC error correction can be selected through ECCMODE register setting. In the initial state, ECC error correction is disabled. The ECC check type is SEC-DED (Single-Error Correction and Double-Error Detection Code).

When ECC function is enabled, 7-bit check bits are appended to 32-bit data for writing. For reading, 39-bit (data: 32 bits, check bits: 7 bits) data is read out from the SRAM (ECC area).

When ECC function is enabled and error checking is selected by setting ECCMOD[1:0] in the ECCMODE register to 11b, error correction is done if a 1-bit error occurs and the ECC1ERR bit in the ECC1STS register is set to 1 if the E1STSEN bit in the ECC1STSEN register is 1. If a 2-bit error occurs, error detection is done and the ECC2ERR bit in the ECC2STS register is set to 1, though error correction is not performed.

When ECC function is enabled and the error checking is disabled, error correction is done if a 1-bit error occurs but ECC1ERR bit in the ECC1STS register is not updated although E1STSEN bit in the ECC1STSEN register is 1. If a 2-bit error occurs, this error is detected but the ECC2ERR bit in the ECC2STS register is not updated, and error correction is not performed.

When ECC function is disable, neither error correction nor error detection is done although 1-bit or 2-bit error occur.

So ECC1ERR bit and ECC2ERR bit are not updated.

There is no way to confirm the location where the error was found. Therefore, when after the occurrence of an error, update all the data.

When updating all the data after the occurrence of an error, the 32-bit data writing is only supported.

Since the SRAM data is undefined after power on accessing the SRAM when ECC function is enabled and error checking is selected causes an ECC error to occur. Therefore, before using ECC function, initial writing with 32-bit data size to the area to be used in the SRAM should be done.

When a read access is executed in a row after a write access, read access is executed with priority. Therefore, during initialization, do not perform the read access in a row after the write access.

38.3.3 ECC Error Interrupt Function

When ECC function is enabled and error checking is applied to the SRAM (ECC area), an ECC error occurs when either the ECC2ERR bit in the ECC2STS register or the ECC1ERR bit in the ECC1STS register becomes 1 to indicate that ECC checking revealed a 2-bit error or a 1-bit error, respectively.

An ECC erroris output with a pulse width of ICLK.When the ECC 1-bit error is to be masked, set the ECC1STSEN.E1STSEN bit to 0 to disable updating of the ECC1ERR bit. An ECC error will not be generated while ECC function is disabled or when ECC function is enabled but error checking is not selected.

ECC error can choose non maskable interrupt or reset by ECCOAD register. When set 1 in the OAD bit of the ECCOAD register, ECC error is output to the Reset function. When set 0 in the OAD bit of the ECCOAD register, ECC Error interrupt is output to the ICU as non-maskable interrupt.

38.3.4 ECC Decoder Testing

Figure 38.1 shows the ECC decoder testing.

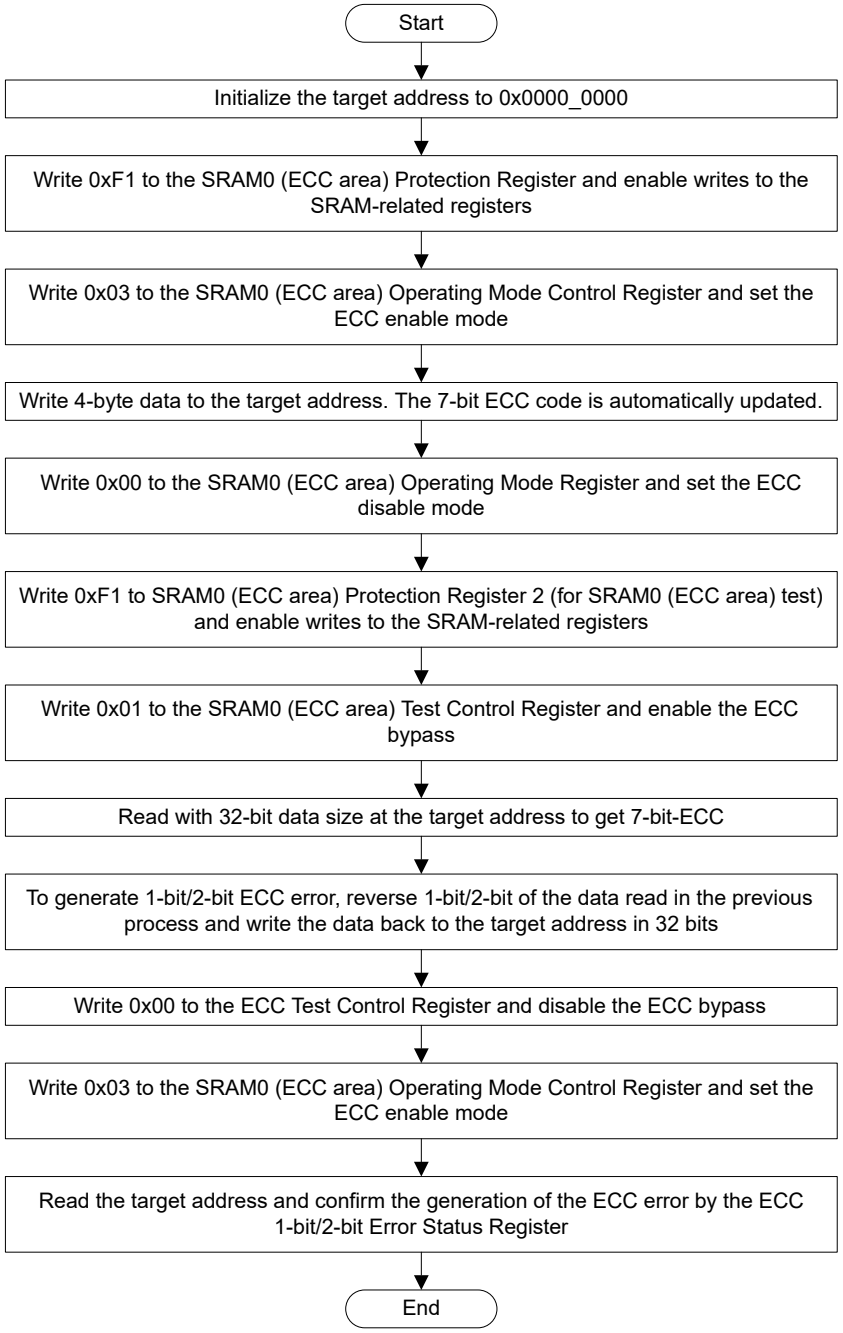

Figure 38.1 ECC decoder testing

38.3.5 Parity Calculation Function

The IEC60730 standard requires the checking of SRAM data. When data is written, a parity bit is added to every 8-bit data in the SRAM which has 32-bit data width, and when data is read, the parity is checked. When a parity error occurs, a parity-error notification is generated. This function can also be used to trigger a reset.

The parity-error notification can be specified as a non-maskable interrupt or a reset in the OAD bit of the PARIOAD register. When the OAD bit is set to 1, a parity error is output to the reset function. When the OAD bit is set to 0, a parity error is output to the ICU as a non-maskable interrupt.

Parity errors can be occasionally caused by noise. To confirm whether the cause of the parity error is noise or corruption, follow the parity check flows shown in Figure 38.2 and Figure 38.3.

When a read access is executed in a row after a write access, read access is executed with priority. Therefore, during initialization, do not perform the read access in a row after the write access.

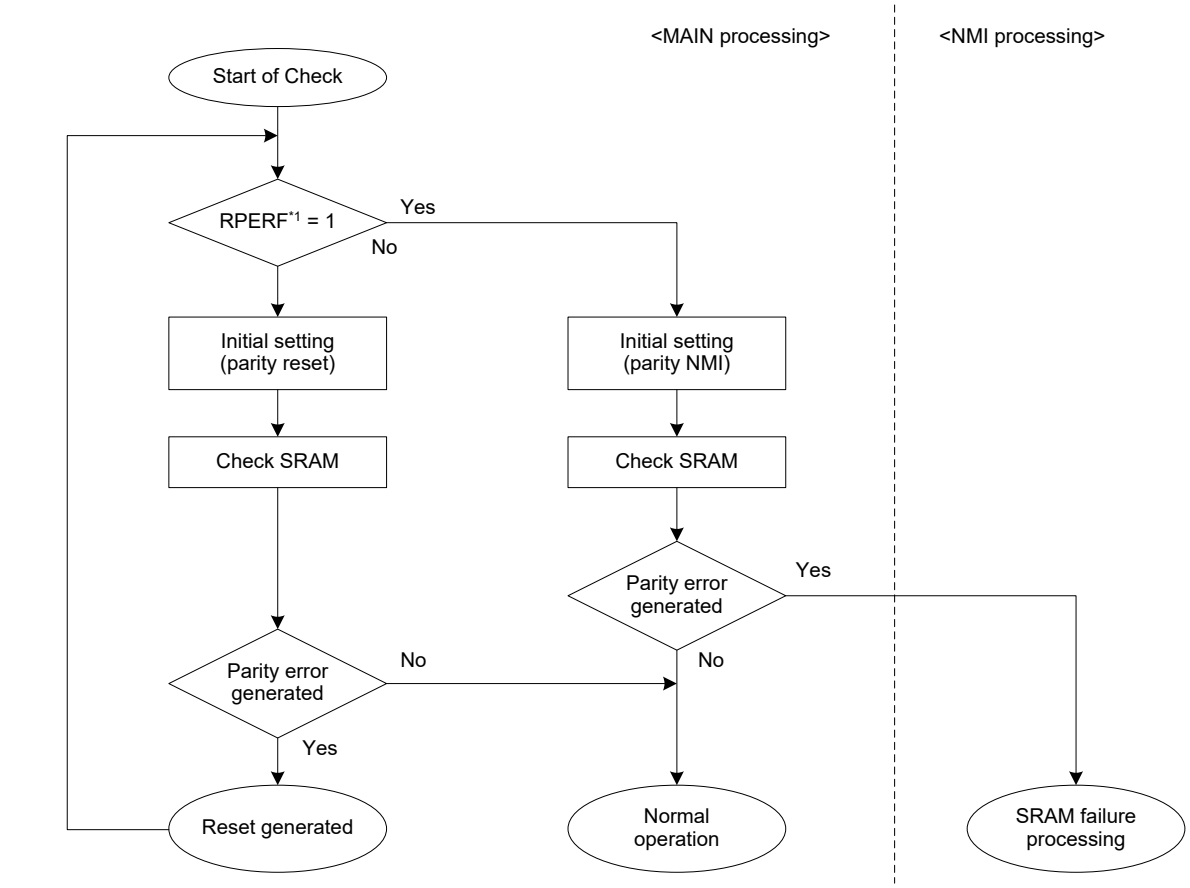

Note 1. RPERF: SRAM Parity Error Reset Detect Flag (RSTSR1.RPERF bit)

Figure 38.2 Flow of SRAM parity check when SRAM parity reset is enabled

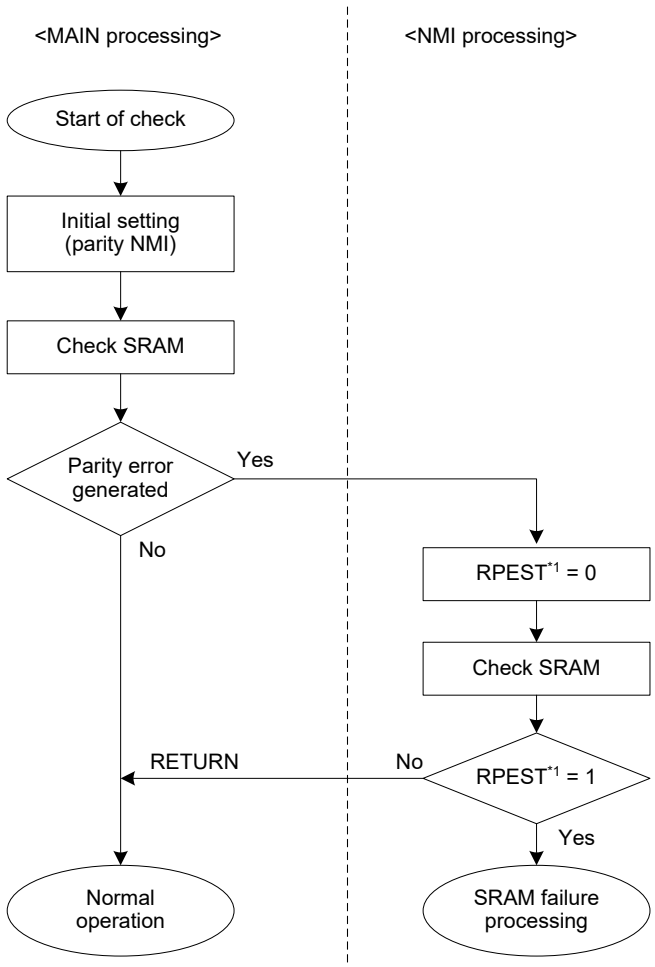

Note 1. RPEST: SRAM Parity Error Interrupt Status Flag (NMISR.RPEST bit)

Figure 38.3 Flow of SRAM parity check when SRAM parity interrupt is enabled

38.3.6 TrustZone Filter Function

There are two types of TrustZone Filter function for SRAM:

- TrustZone Filter for SRAM register protection
- TrustZone Filter for SRAM memory protection

38.3.6.1 TrustZone Filter for SRAM Register Protection

Security attribution (SA) can be used to protect SRAM-related registers from non-secure access. When SA specifies the SRAM-related registers as having secure status, they cannot be overwritten by non-secure access because the TrustZone filter detects this as an error and protects them from the write access. SA for SRAM registers is applied in common to all SRAM registers.

Table 38.2 Register protection (1 of 2)

SA	Access status	Write access	Read access
Secure	Secure	Permit	Permit
	Non-secure	TrustZone Filter error Protected	Permit

Table 38.2 Register protection (2 of 2)

SA	Access status	Write access	Read access
Non-secure	Secure	Permit	Permit
	Non-secure	Permit	Permit

When TrustZone Filter error for SRAM register access occurs, no error notification and no error response occur.

38.3.6.2 TrustZone Filter for SRAM Memory Protection

SRAM memory such as SRAM0 includes ECC region and parity can be divided into Secure/Non-secure callable/Non-secure status with Memory Security Attribution (MSA) and can be protected from non-secure access. When MSA indicates that SRAM memory region are of Secure or Non-secure callable status, non-secure access cannot overwrite them.

Table 38.3 Memory protection

SA	Access status	Write access	Read access
Secure/Non-secure callable	Secure	Permit	Permit
	Non-secure	TrustZone Filter error • Protected • Error response occurs	TrustZone Filter error • Read data is 0 • Error response occurs
Non-secure	Secure	Permit	Permit
	Non-secure	Permit	Permit

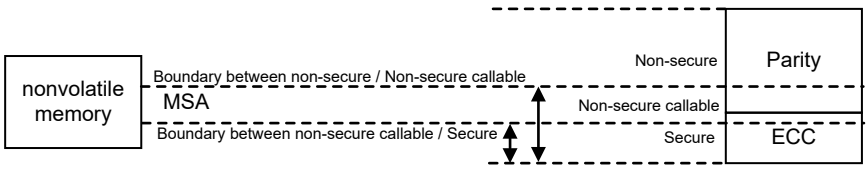

Figure 38.4 TrustZone Filter for SRAM memory

When TrustZone Filter error for SRAM memory access occurs, an error notification which becomes reset request or NMI request occurs. See section 42.2. Arm TrustZone Security .

38.3.7 Interrupt Source

The SRAM interrupt source includes an ECC error, Parity error and TrustZone filter error. ECC error and Parity error can choose non-maskable interrupt or reset by OAD bit. When the debugger is connected, reset and non-maskable interrupt are maskable. Also, if these masks are set by the debugger, each status register is not set even if an ECC error occurs. For details on the debug mode, see section 2, CPU.

Table 38.4 SRAM Interrupt Source

Name	Interrupt Source	DTC Activation	DMAC Activation
ECCERR	ECC error (ECC operation region in SRAM0)	Not possible	Not possible
PARITYERR	Parity error	Not possible	Not possible
TZFLT	TrustZone filter error	Not possible	Not possible

38.3.8 Number of Access Cycles to SRAM

When accessing SRAM from the CPU, the access cycle is one cycle if the cache is hit. The number of access cycles differs when the cache is disabled or a miss occurs. Table 38.5 lists the access cycles when the cache is disabled or a cache miss occurs.

Table 38.5 Access cycles during cache disabled or cache miss

Access area		Read (cycles)		Write (cycles)	
		Word access	Half-word/Byte access	Word access	Half-word/Byte access
Cache disabled or non-cacheable in the ECC area	ECCMODE.ECCMOD[1] = 0 (Disable ECC function)	3		2*1	
	ECCMODE.ECCMOD[1] = 1 (Enable ECC function)	3		2*1	4
Cache disabled or non-cacheable in the Parity area		3		2*1	
Cache miss in the cacheable ECC area	ECCMODE.ECCMOD[1] = 0 (Disable ECC function)	3		1*1	
	ECCMODE.ECCMOD[1] = 1 (Enable ECC function)	3		1*1	
Cache miss in the cacheable Parity area		3		1*1	

Note 1. For efficiency of the access, when read access occurs to the same memory after write, memory write by the precedent write command delays it until for the next idle cycle or the next write access. When read continues, it is given priority to read.

39. Flash Memory

This MCU incorporates code flash memory, data flash memory, and option-setting memory. The code flash memory stores instructions and operands, and the data flash memory stores data. For option-setting memory, see section 6, Option-Setting Memory.

39.1 Overview

Table 39.1 lists the specifications of the flash memory, and Figure 39.1 is block diagrams of the flash memory related modules.

The I/O pins used in boot mode, see Table 39.28.

The FCU (flash control unit) controls programming and erasure of the flash memory. The FACI (flash application command interface) controls the FCU according to the specified FACI commands.

Regarding the configuration of the code flash memory, see Figure 39.2 to Figure 39.3, and for the configuration of the data flash memory, see Figure 39.4. It is necessary to enable HOCO when rewriting the flash memory.

Table 39.1 Specifications of flash memory (1 of 2)

Item	Code flash memory	Data flash memory
Memory capacity	User area: 512 KB max	Data area: 8 KB
Read cycle	See section 39.16.3. Access Cycle	See section 39.16.3. Access Cycle
Value after erasure	0xFF	0xFF
Programming/erasing method	• Programming and erasing the code flash memory and data flash memory, and programming the option-setting memory are handled by the FACI commands specified in the FACI command issuing area (0x407E_0000) (self-programming). • Programming/erasure through transfer by a serial-programmer via a serial interface (serial programming)	
Protection	Protects against erroneous rewriting of the flash memory	
Dual bank function	The dual-bank structure makes a safe update possible in cases where programming is suspended. • Linear mode: the code flash memory is used as one area. • Dual mode: the code flash memory is divided into two areas.	Not available
Block swap function	The block swap structure makes a safe update for a part of non-secure application possible in case where programming is suspended.	Not available
Background operations (BGOs)	• The code flash memory can be read while the code flash memory is being programmed or erased.*1 • The data flash memory can be read while the code flash memory is being programmed or erased. • The code flash memory can be read while the data flash memory is being programmed or erased.	
Units of programming and erasure	• Units of programming for the user area: 8 bytes • Units of erasure for the user area: 2K bytes	• Unit of programming for the data area:1 byte • Unit of erasure for the data area: 256 bytes
Other functions	Interrupts can be accepted during self-programming. In the initial settings of this MCU, an expansion area of the option-setting memory can be set.	
On-board programming (five types)	Programming/erasure in boot mode (for the SCI interface) • The asynchronous serial interface (SCI9) is used. • The transfer rate is adjusted automatically. Programming/erasure in boot mode (for the SWD interface) • SWD interface is used. Programming/erasure in On-chip debug mode • SWD interface is used Programming and erasure by self-programming • This allows code flash memory programming/erasure without resetting the system.	
Unique ID	A 16-byte ID code provided for each MCU	

Table 39.1 Specifications of flash memory (2 of 2)

Item	Code flash memory	Data flash memory
FACI command	Program : 8 bytes Block erase: 1 block (2 KB) Forced Stop Status Clear Configuration set (16 bytes) Chip erase: code flash memory capacity Blank Check: 8 bytes to code flash memory capacity	Program: 1 byte Block Erase: 1 block (256 bytes) Chip erase Forced Stop Blank Check: 1 byte to data flash memory capacity Status Clear
Security function	Protects against illicit tampering with or reading out of data in flash memory Startup area select setting protection ● BTFLG and FSUACR registers are protected by the FSPR bit. Permanent block protect setting protection ● Code flash memory is permanently protected from programming/erasure operation by the permanent block protect function. Flash memory protection for TrustZone ● Protection for flash memory area (P/E) ● Protection for flash memory area (read) ● Protection for register ● Protection during FACI command operation. Code flash P/E mode entry protection	
Safety function	Software protection ● FACI command protection by FENTRYR register. ● Flash memory is protected by FWEPROR register ● The user area is protected by the block protect setting Error protection ● Error is detected when unintended commands or prohibited settings occur. The FACI command is not accepted after an error detection. Boot area protection ● The start-up area select function allows customer to safely update the boot firmware. The size of the start-up area is 8 KB. Boot area is protected from program/erase operation by block protect function.	
Interrupt request	● FRDYI (flash sequencer ready (processing end)) : Enabled by FRDYIE bit. ● FIFERR (flash sequencer error) : Enabled by CFAEIE/CMDLKIE/DFAEIE bits	
Address conversion	Start-up area select function is supported in linear mode Dual mode and Linear mode ● Bank swap function is supported in dual mode ● Block swap function is supported in linear mode	

Note 1. Limitations apply to the combinations of the address ranges for programming/erasure process and reading process: see Table 39.30.

Figure 39.1 shows how modules related to flash memory can be configured. The flash sequencer is configured with the FCU and FACI. The FCU executes basic control for rewriting of the flash memory. The FACI receives FACI commands using peripheral bus, and controls FCU operations accordingly.

In response to a reset, the FACI transfers data from the flash memory to the option byte storage registers.

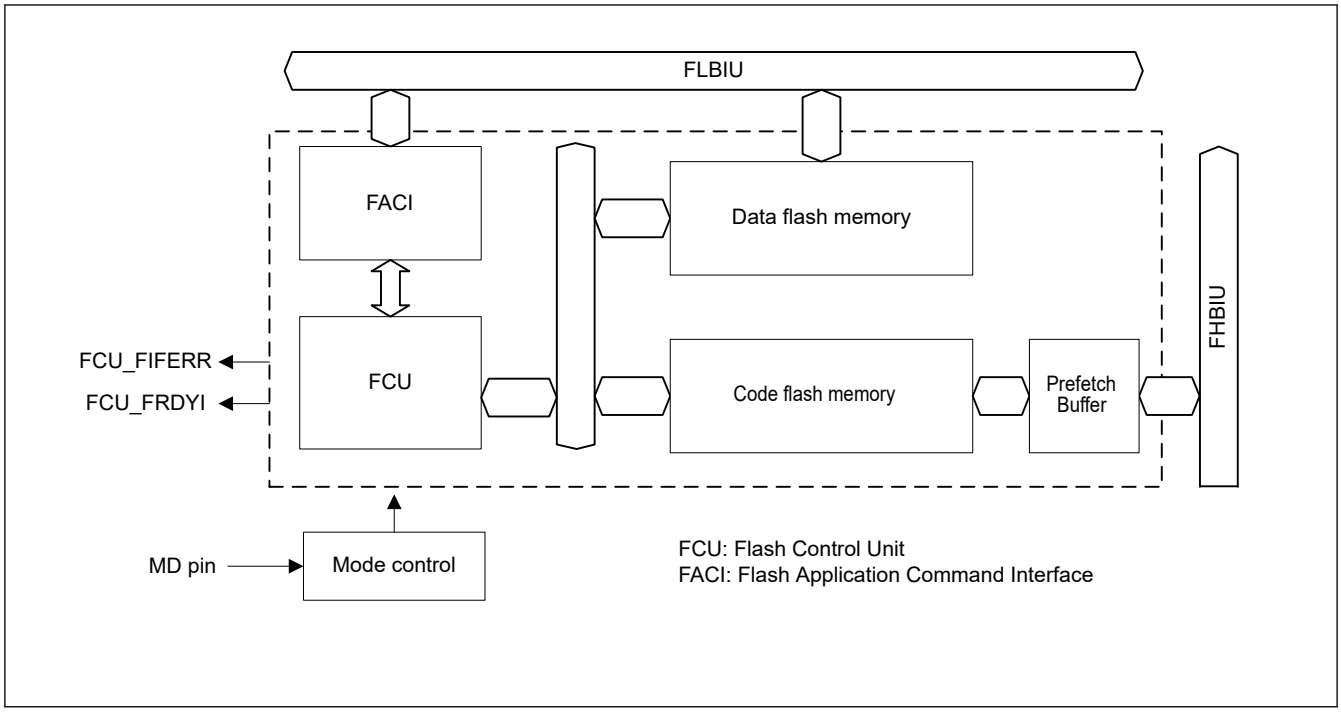

Figure 39.1 Block diagram of flash memory-related modules

39.2 Structure of Memory

Figure 39.2 shows the memory map of code flash memory in linear mode. Figure 39.3 shows the memory map of code flash memory in dual mode. This MCU can use the code flash memory as 2 bank areas by using the dual bank function. This dual-bank structure allows a safe update of a program while a user program is running.

The user area of the code flash memory in this MCU is divided into 2-Kbyte blocks, which serve as the units of erasure.

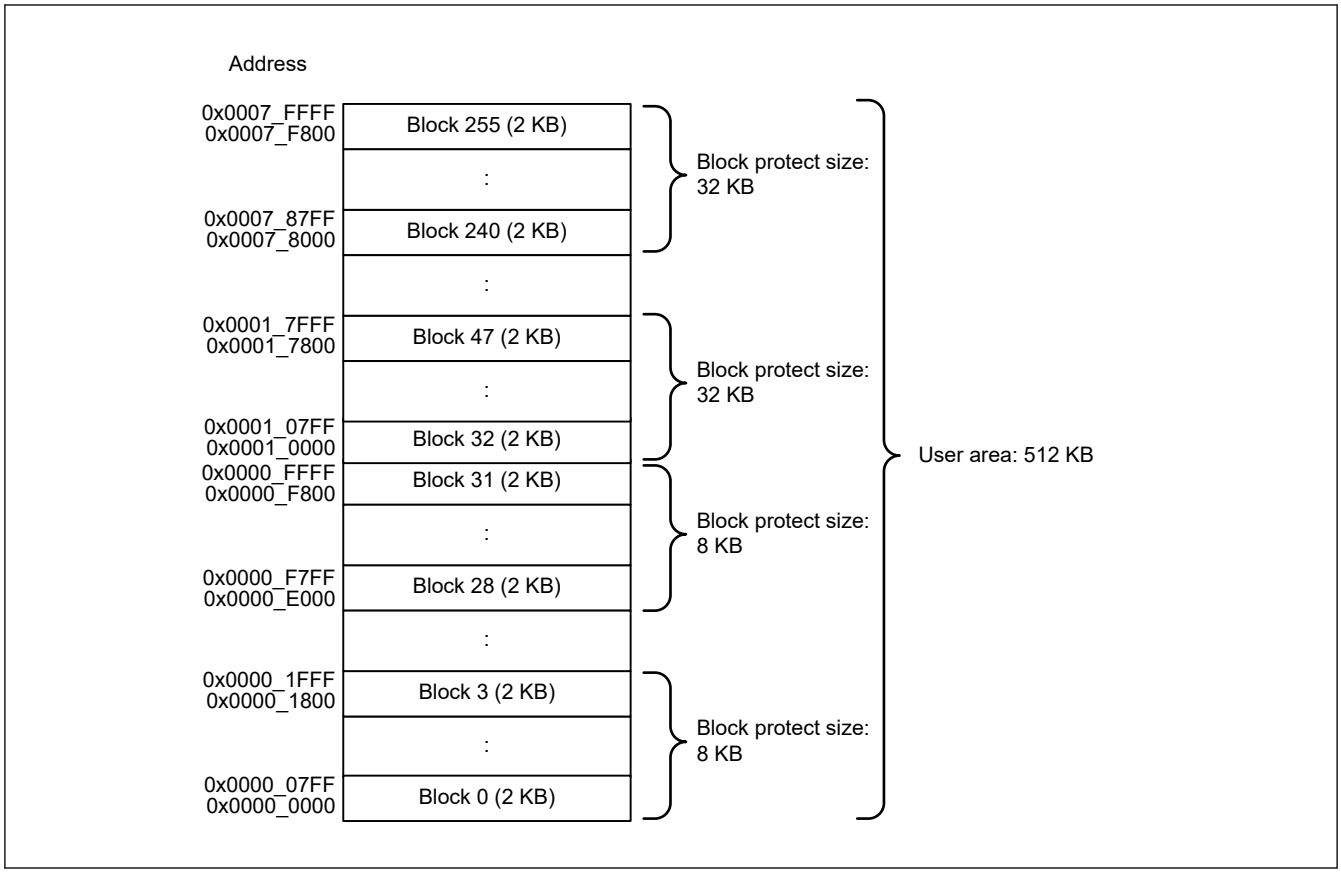

Figure 39.2 Map of the code flash memory in linear mode

Table 39.2 Read and programming/erasure address by product for the code flash memory

Product	Address	Number of blocks
512 KB product	0x0000_0000 to 0x0007_FFFF	0 to 255
256 KB product	0x0000_0000 to 0x0003_FFFF	0 to 127

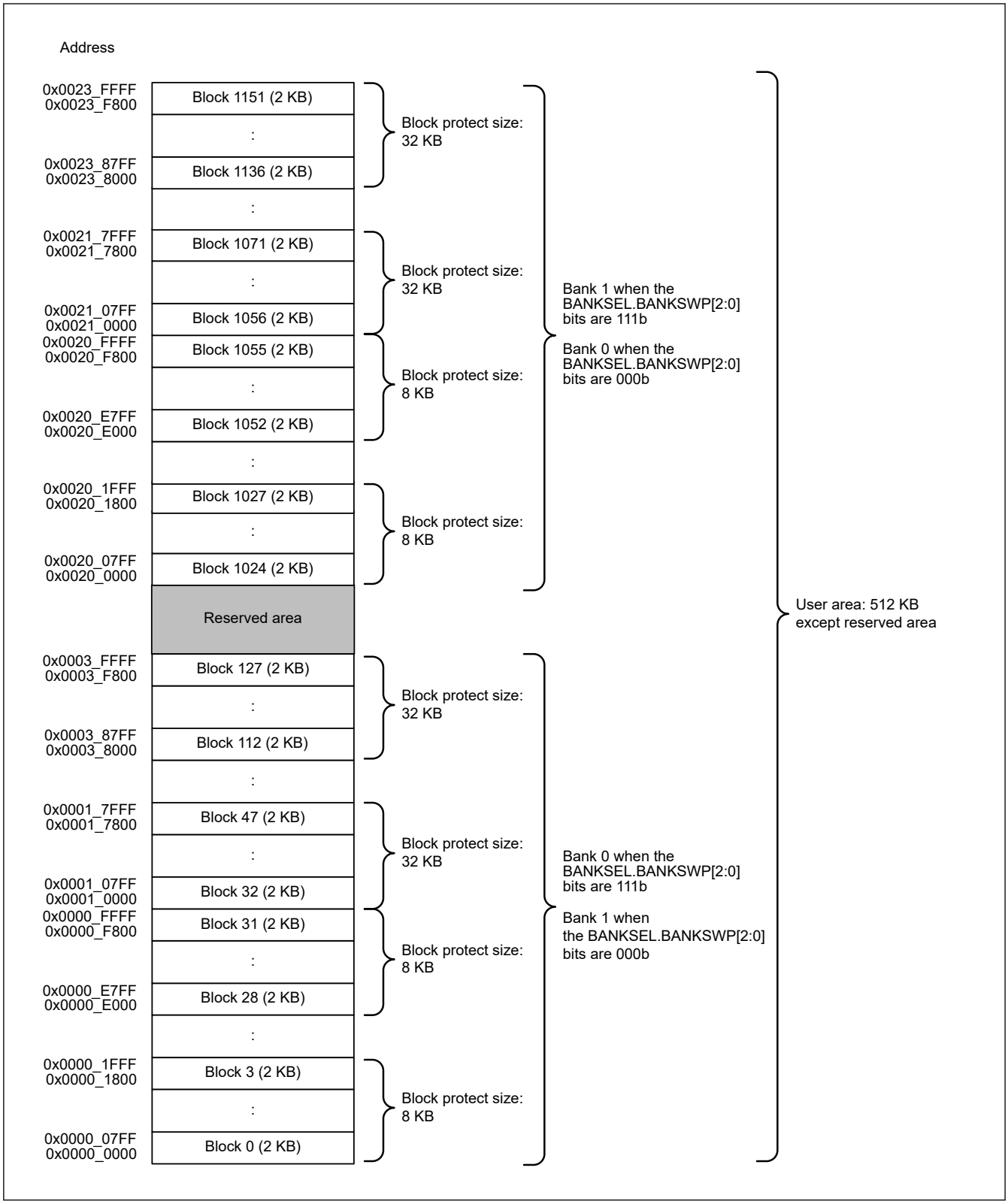

Figure 39.3 Map of the code flash memory in dual mode

Table 39.3 Read and programming/erasure address by product for the code flash memory (1 of 2)

Product	Address	Number of blocks
512 KB product, lower side bank	0x0000_0000 to 0x0003_FFFF	0 to 127
512 KB product, upper side bank	0x0020_0000 to 0x0023_FFFF	1024 to 1151

Table 39.3 Read and programming/erasure address by product for the code flash memory (2 of 2)

Product	Address	Number of blocks
256 KB product, lower side bank	0x0000_0000 to 0x0001_FFFF	0 to 63
256 KB product, upper side bank	0x0020_0000 to 0x0021_FFFF	1024 to 1087

The data area of the data flash memory in this MCU is divided into 256-byte blocks, with each being a unit for erasure. Figure 39.4 shows the mapping of the data flash memory.

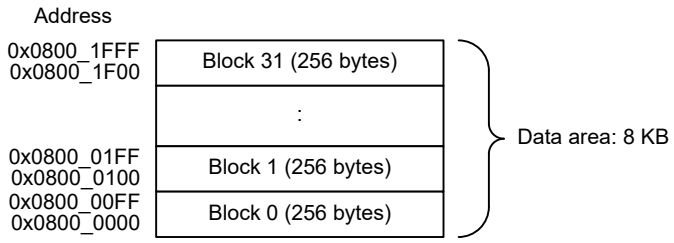

Figure 39.4 Map of the data flash memory

39.3 Address Space

Using the hardware interface with flash memory requires access to all registers of the hardware, which is for issuing FACI commands. Table 39.4 provides information about the hardware interface.

Table 39.4 Information on the hardware interface area

Area	Address	Capacity
Area containing various registers of the hardware	See section 39.4. Register Descriptions.	See section 39.4. Register Descriptions.
FACI command-issuing area	0x407E_0000	4 bytes

For the address information of the flash memory, see Figure 39.2.

39.4 Register Descriptions

39.4.1 DFLCTL : Data Flash Control Register

Base address: FLCN = 0x407E_C000

Offset address: 0x0090

Bit position:	7	6	5	4	3	2	1	0
Bit field:	—	—	—	—	—	—	—	DFLEN
Value after reset:	0	0	0	0	0	0	0	0

Bit	Symbol	Function	R/W
0	DFLEN	Data Flash Access Enable*1 0: Access to the data flash is disabled 1: Access to the data flash is enabled	R/W
7:1	—	These bits are read as 0. The write value should be 0.	R/W

Note: If the security attribution is configured as Secure:

- Secure access and Non-secure read access are allowed

- Non-secure write access is ignored, and TrustZone access error is not generated.

If the security attribution is configured as Non-secure:

- Secure and Non-secure access are allowed.

Note 1. It is necessary that DFLCTL.DFLEN bit is set to 1 before issuing the Configuration set command.

The DFLCTL register enables or disables access (reading, programming, and erasing) to the data flash. After setting the DFLCTL.DFLEN bit, Data Flash STOP recovery time (t_{DSTOP}) is required before reading the data flash or entering the data flash P/E mode.

39.4.2 PFBER : Prefetch Buffer Enable Register

Base address: FLCN = 0x407E_C000

Offset address: 0x3FC8

Bit position:	7	6	5	4	3	2	1	0
Bit field:	—	—	—	—	—	—	—	PFBE
Value after reset:	0	0	0	0	0	0	0	0

Bit	Symbol	Function	R/W
0	PFBE	Prefetch Buffer Enable bit 0: Prefetch buffer is disabled 1: Prefetch buffer is enabled	R/W*1
7:1	—	These bits are read as 0. The write value should be 0.	R/W

Note: If the security attribution is configured as Secure:

- Secure access and Non-secure read access are allowed
- Non-secure write access is ignored, and TrustZone access error is not generated.

If the security attribution is configured as Non-secure:

- Secure and Non-secure access are allowed.

Note 1. The prefetch buffer should be disabled once to initialize the buffer after programming or erasing the code flash memory or after setting the option-setting memory. The setting of PFBE bit from 1 to 0 must be done when the code flash memory is not being read. For example, the software on SRAM that writes PFBE bit and confirms its value changed can avoid PFBE bit changing while the code flash memory read.

39.4.3 FSAR : Flash Security Attribution Register

Base address: FCACHE = 0x4001_C100

Offset address: 0x040

Bit position:	15	14	13	12	11	10	9	8	7	6	5	4	3	2	1	0
Bit field:	—	—	—	—	—	—	—	FCKMHZSA	—	—	—	—	—	—	—	FLWTSA
Value after reset:	1	1	1	1	1	1	1	1	1	1	1	1	1	1	1	1

Bit	Symbol	Function	R/W
0	FLWTSA	FLWT Security Attribution Target register : FLWT 0: Secure 1: Non-secure	R/W
7:1	—	These bits are read as 1. The write value should be 1.	R/W
8	FCKMHZSA	FCKMHZ Security Attribution Target register : FCKMHZ 0: Secure 1: Non-secure	R/W
15:9	—	These bits are read as 1. The write value should be 1.	R/W

Note: Only Secure access can write to this register. Both Secure access and Non-secure read access are allowed but Non-secure write access is not allowed and TrustZone access error is not generated.

Note: This register is write-protected by PRCR register.

Write access is invalid when PRCR.PRC4 bit is 0. See section 11, Register Write Protection.

FLWTSA bit (FLWT Security Attribution)

This bit sets the security attribute of FLWT.

FCKMHZSA bit (FCKMHZ Security Attribution)

This bit sets the security attribute of FCKMHZ.

39.4.4 UIDRn : Unique ID Registers n (n = 0 to 3)

Address: 0x0100_8190 + n × 4

Bit position:	31	0
Bit field:	UID	
Value after reset:	Unique value for each chip	

Bit	Symbol	Function	R/W
31:0	UID	Unique ID	R

The UIDRn is a read-only register that stores a 16-byte ID code (unique ID) for identifying the individual MCU. The UIDRn register should be read in 32-bit units. When reading by the signature request command of the serial programming interface, the data is read in order from the data with the large address. That is, the data in 0x0100_819F is read first, and in 0x0100_8190 is read last.

39.4.5 PNRn : Part Numbering Register n (n = 0 to 3)

Address: 0x0100_80F0 + n × 4

Bit position:	31	0
Bit field:	PNR	
Value after reset:	Unique value for each chip	

Bit	Symbol	Function	R/W
31:0	PNR	Part Number	R

The PNRn is a read-only register that stores a 16-byte part numbering. The PNRn register should be read in 32-bit units. Each byte corresponds to the ASCII code representation of the product part number as detailed in Table 1.14. The first character ("R", 0x52 in ASCII code) of the part number is stored in the byte with the smallest address (0x0100_80F0). When reading by the signature request command of the serial programming interface, the data is read in order from the data with the small address. That is, the data in 0x0100_80F0 is read first, and in 0x0100_80FF is read last.

39.4.6 MCUVER : MCU Version Register

Address: 0x0100_81B0

Bit position:	7	6	5	4	3	2	1	0
Bit field:	MCUVE							
Value after reset:	Value depend on the chip							

Bit	Symbol	Function	R/W
7:0	MCUVE	MCU Version	R

The MCUVER is a read-only register that stores a MCU version. The MCUVER register should be read in 8-bit units.

39.4.7 FASTAT : Flash Access Status Register

Base address: FACI = 0x407F_E000

Offset address: 0x10

Bit position:	7	6	5	4	3	2	1	0
Bit field:	CFAE	—	—	CMDLK	DFAE	—	—	—
Value after reset:	0	0	0	0	0	0	0	0

Bit	Symbol	Function	R/W
2:0	—	These bits are read as 0. The write value should be 0.	R/W
3	DFAE	Data Flash Memory Access Violation Flag 0: No data flash memory access violation has occurred 1: A data flash memory access violation has occurred.	R/W*1
4	CMDLK	Command Lock Flag 0: The flash sequencer is not in the command-locked state 1: The flash sequencer is in the command-locked state.	R
6:5	—	These bits are read as 0. The write value should be 0.	R/W
7	CFAE	Code Flash Memory Access Violation Flag 0: No code flash memory access violation has occurred 1: A code flash memory access violation has occurred.	R/W*1

Note: If the security attribution is configured as Secure:
- Secure access and Non-secure read access are allowed
- Non-secure write access is ignored, and TrustZone access error is not generated.

If the security attribution is configured as Non-secure:
- Secure and Non-secure access are allowed.

Note 1. Only 0 can be written to clear the flag after 1 is read.

The FASTAT register indicates whether a code flash or data flash memory access violation has occurred. If any of the CFAE, CMDLK, and DFAE bits is set to 1, the flash sequencer enters the command-locked state (see section 39.11.2. Error Protection). To release it from the command-locked state, issue a status clear command or Forced Stop command to the flash sequencer.

DFAE bit (Data Flash Memory Access Violation Flag)

The DFAE bit indicates whether a data flash memory access violation occurred. When this bit is set to 1, the ILGLERR bit in the FSTATR register is set to 1, placing the flash sequencer in the command-locked state.

[Setting conditions]

FACI commands issued in the data flash P/E mode are as follows:

- The setting of the FSADDR or FEADDR register is the reserved portion of the data area
- FACI commands of non-secure access are issued while the setting of the FSADDR or FEADDR register is the secure region address.

[Clearing conditions]

- When this bit is written as 0 after it is set to 1
- When the flash sequencer starts to process the Status Clear or Forced Stop command.

CMDLK bit (Command Lock Flag)

The CMDLK bit indicates that the flash sequencer is in the command-locked state.

[Setting conditions]

- The flash sequencer detects an error and enters the command-locked state.

[Clearing conditions]

- When the flash sequencer starts to process the Status Clear or Forced Stop command.

CFAE bit (Code Flash Memory Access Violation Flag)

The CFAE bit indicates whether a code flash memory access violation has occurred. When this bit is set to 1, the ILGLERR bit in the FSTATR register is set to 1, placing the flash sequencer in the command-locked state.

[Setting conditions]

FACI commands issued in the code flash P/E mode are as follows:

- The setting of the FSADDR register is the reserved portion of the user area
- The Configuration set command is issued while the setting of the FSADDR register is from 0x0000A100 to 0x0000A2F0 in self-programming mode
- FACI commands of non-secure access are issued while the setting of the FSADDR register is the secure region address.

[Clearing conditions]

- When this bit is written as 0 after it is set to 1
- When the flash sequencer starts to process the Status Clear or Forced Stop command.

39.4.8 FAEINT : Flash Access Error Interrupt Enable Register

Base address: FACI = 0x407F_E000

Offset address: 0x14

Bit position:	7	6	5	4	3	2	1	0
Bit field:	CFAEIE	—	—	CMDLKIE	DFAEIE	—	—	—
Value after reset:	1	0	0	1	1	0	0	0

Bit	Symbol	Function	R/W
2:0	—	These bits are read as 0. The write value should be 0.	R/W
3	DFAEIE	Data Flash Memory Access Violation Interrupt Enable 0: Generation of an FIFERR interrupt request is disabled when FASTAT.DFAE is set to 1 1: Generation of an FIFERR interrupt request is enabled when FASTAT.DFAE is set to 1.	R/W
4	CMDLKIE	Command Lock Interrupt Enable 0: Generation of an FIFERR interrupt request is disabled when FASTAT.CMDLK is set to 1 1: Generation of an FIFERR interrupt request is enabled when FASTAT.CMDLK is set to 1.	R/W
6:5	—	These bits are read as 0. The write value should be 0.	R/W
7	CFAEIE	Code Flash Memory Access Violation Interrupt Enable 0: Generation of an FIFERR interrupt request is disabled when FASTAT.CFAE is set to 1 1: Generation of an FIFERR interrupt request is enabled when FASTAT.CFAE is set to 1.	R/W

Note: If the security attribution is configured as Secure:
- Secure access and Non-secure read access are allowed
- Non-secure write access is ignored, and TrustZone access error is not generated.

If the security attribution is configured as Non-secure:
- Secure and Non-secure access are allowed.

The FAEINT register enables or disables generation of a flash access error (FIFERR) interrupt request.

DFAEIE bit (Data Flash Memory Access Violation Interrupt Enable)

The DFAEIE bit enables or disables generation of an FIFERR interrupt request when a data flash memory access violation occurs, setting the DFAE bit in the FASTAT register to 1.

CMDLKIE bit (Command Lock Interrupt Enable)

The CMDLKIE bit enables or disables generation of an FIFERR interrupt request when the flash sequencer enters the command-locked state, setting the CMDLK bit in the FASTAT register to 1.

CFAEIE bit (Code Flash Memory Access Violation Interrupt Enable)

The CFAEIE bit enables or disables generation of an FIFERR interrupt request when a code flash memory access violation occur, setting the CFAE bit in the FASTAT register to 1.

39.4.9 FRDYIE : Flash Ready Interrupt Enable Register

Base address: FACI = 0x407F_E000

Offset address: 0x18

Bit position:	7	6	5	4	3	2	1	0
Bit field:	—	—	—	—	—	—	—	FRDYIE
Value after reset:	0	0	0	0	0	0	0	0

Bit	Symbol	Function	R/W
0	FRDYIE	Flash Ready Interrupt Enable 0: Generation of an FRDY interrupt request is disabled 1: Generation of an FRDY interrupt request is enabled.	R/W
7:1	—	These bits are read as 0. The write value should be 0.	R/W

Note: If the security attribution is configured as Secure:
- Secure access and Non-secure read access are allowed
- Non-secure write access is ignored, and TrustZone access error is not generated.

If the security attribution is configured as Non-secure:
- Secure and Non-secure access are allowed.

The FRDYIE register enables or disables generation of a flash ready (FRDY) interrupt request.

FRDYIE bit (Flash Ready Interrupt Enable)

The FRDYIE bit enables or disables generation of an FRDY interrupt request when the FRDY bit in the FSTATR register is changed from 0 to 1 on completion of processing by the flash sequencer of the Program, Block Erase, Chip Erase, Blank Check, and Configuration set command.

39.4.10 FSADDR : FACI Command Start Address Register

Base address: FACI = 0x407F_E000

Offset address: 0x30

Bit position:	31																															0
Bit field:	FSADDR[31:0]																															
Value after reset:	0	0	0	0	0	0	0	0	0	0	0	0	0	0	0	0	0	0	0	0	0	0	0	0	0	0	0	0	0	0	0	0

Bit	Symbol	Function	R/W
31:0	FSADDR[31:0]	Start Address for FACI Command Processing	R/W*1

Note: If the security attribution is configured as Secure:
- Secure access and Non-secure read access are allowed
- Non-secure write access is ignored, and TrustZone access error is not generated.

If the security attribution is configured as Non-secure:
- Secure and Non-secure access are allowed.

Note 1. These bits can be written when the FRDY bit in the FSTATR register is 1. Writing to these bits are ignored when the FRDY bit is 0. Note that b0 and b1 are read-only.

Table 39.5 FACI command address boundary

Command	Address Boundary
Program (code flash memory)	8 bytes
Program (data flash memory)	1 byte
Block Erase (code flash memory)	2 KB
Block Erase (data flash memory)	256 bytes
Chip Erase	One flash memory
Blank Check (code flash memory)	8 bytes
Blank Check (data flash memory)	1 byte
Configuration set	16 bytes

The FSADDR register specifies the address where the target area for command processing starts when the FACI command for Program, Block Erase, Chip Erase, Blank Check, or Configuration set is issued.

The FSADDR value is initialized when the SUINIT bit in the FSUINITR register is set to 1. It is also initialized by a reset.

FSADDR[31:0] bits (Start Address for FACI Command Processing)

The FSADDR[31:0] bits specify the start address for FACI command processing. Bits [31:24] are ignored in FACI command processing for the code flash memory. Bits [31:17] are ignored in FACI command processing for the data flash memory. Bits associated with the address bits of lower order than the address boundary listed in Table 39.5 are also ignored.

For information on the addresses of the code flash memory and the data flash memory, see section 39.2. Structure of Memory.

For information on the addresses of the configuration setting, see section 39.9.3.14. Configuration Set Command.

39.4.11 FEADDR : FACI Command End Address Register

Base address: FACI = 0x407F_E000

Offset address: 0x34

Bit position:	31																															0
Bit field:	FEADDR[31:0]																															
Value after reset:	0	0	0	0	0	0	0	0	0	0	0	0	0	0	0	0	0	0	0	0	0	0	0	0	0	0	0	0	0	0	0	0

Bit	Symbol	Function	R/W
31:0	FEADDR[31:0]	End Address for FACI Command Processing	R/W*1

Note: If the security attribution is configured as Secure:
- Secure access and Non-secure read access are allowed
- Non-secure write access is ignored, and TrustZone access error is not generated.

If the security attribution is configured as Non-secure:
- Secure and Non-secure access are allowed.

Note 1. These bits can be written when the FRDY bit in the FSTATR register is 1. Writing to these bits are ignored when the FRDY bit is 0. Note that bit [0] and bit [1] are read-only.

The FEADDR register specifies the end address of the target area for Chip Erase and Blank Check command processing.

For Chip Erase command, the FEADDR bits should be set to end address of each code flash memory and data flash memory. If the setting of FSADDR is more than FEADDR, the flash sequencer enters the command-locked state.

When incremental mode is selected as the addressing mode for Blank Checking (when FBCCNT.BCDIR = 0), the address specified in the FSADDR register should be equal to or smaller than the address in the FEADDR register. Conversely, the address in the FSADDR register should be equal to or larger than the address in the FEADDR register when decremental mode is selected as the addressing mode for Blank Check (i.e. when FBCCNT.BCDIR = 1). If the BCDIR, FSADDR, and

FEADDR bit settings are inconsistent with the specified rules, the flash sequencer enters the command-locked state (see section 39.11.2. Error Protection).

The FEADDR value is initialized when the SUINIT bit in the FSUINITR register is set to 1. It is also initialized by a reset.

FEADDR[31:0] bits (End Address for FACI Command Processing)

The FEADDR[31:0] bits specify the end address for Chip Erase and Blank Check command processing. Bits [31:24] are ignored in FACI command processing for the code flash memory. Bits [31:17] are ignored in FACI command processing for the data flash memory. Bits corresponding to address bits of lower order than the corresponding boundary listed in the section 39.4.10. FSADDR : FACI Command Start Address Register are ignored.

For information on the addresses of the flash memory, see section 39.2. Structure of Memory.

39.4.12 FMEPROT : Flash P/E Mode Entry Protection Register

Base address: FACI = 0x407F_E000

Offset address: 0x44

Bit position:	15	14	13	12	11	10	9	8	7	6	5	4	3	2	1	0
Bit field:	KEY[7:0]								—	—	—	—	—	—	—	CEPROT
Value after reset:	0	0	0	0	0	0	0	0	0	0	0	0	0	0	0	1

Bit	Symbol	Function	R/W
0	CEPROT	Code Flash P/E Mode Entry Protection 0: FENTRYC bit is not protected 1: FENTRYC bit is protected.	R/W*1 *2 *4
7:1	—	These bits are read as 0. The write value should be 0.	R/W
15:8	KEY[7:0]	Key Code	W*3

Note 1. Writing to this bit is only possible when the FRDY bit in the FSTATR register is 1. Writing to this bit while the FRDY bit = 0 is ignored.
Note 2. Writing to this bit is only possible when 16 bits are written and the value written to the KEY bits is 0xD9.
Note 3. Written values are not retained by these bits (always read as 0x00).
Note 4. Only secure access can write to this register. Both secure access and non-secure read access are allowed. Non-secure write access is denied, but TrustZone access error is not generated.

CEPROT bit (Code Flash P/E Mode Entry Protection)

The CEPROT bit specifies the protection setting of the FRNTRYC bit in the FENTRYR register.

[Setting condition]

- 1 being written to the CEPROT bit while writing to FMEPROT is enabled.

[Clearing condition]

- 0 being written to the CEPROT bit while writing to FMEPROT is enabled.

39.4.13 FBPROT0 : Flash Block Protection Register

Base address: FACI = 0x407F_E000

Offset address: 0x78

Bit position:	15	14	13	12	11	10	9	8	7	6	5	4	3	2	1	0
Bit field:	KEY[7:0]								—	—	—	—	—	—	—	BPCN0
Value after reset:	0	0	0	0	0	0	0	0	0	0	0	0	0	0	0	0

Bit	Symbol	Function	R/W
0	BPCN0	Block Protection for Non-secure Cancel 0: Block protection is enabled 1: Block protection is disabled.	R/W*1 *2*4

Bit	Symbol	Function	R/W
7:1	—	These bits are read as 0. The write value should be 0.	R/W
15:8	KEY[7:0]	Key Code	W*3

Note 1. This bit can be written when the FRDY bit in the FSTATR register is 1. Writing to this bit is ignored when the FRDY bit is 0.
Note 2. Writing to this bit is only possible when 16 bits are written and the value written to the KEY[7:0] bits is 0x78.
Note 3. Written values are not retained by these bits (always read as 0x00).
Note 4. Only secure access can write to this register. Both secure access and non-secure read access are allowed. Non-secure write access is denied, but TrustZone access error is not generated.

The FBPROT0 register is used to disable the block protect function for non-secure. When the block protect setting is locked by the permanent block setting, it cannot be disabled by this register.

The FBPROT0 value is initialized when the SUINIT bit in the FSUINITR is set to 1, because the FENTRYR value is initialized to 0x0000. It is also initialized by a reset.

BPCN0 bit (Block Protection for Non-secure Cancel)

The BPCN0 bit disables the block protect setting for non-secure function.

[Setting condition]

- When the write-enabling conditions are satisfied and the FENTRYR is not 0x0000, write 1 to this bit.

[Clearing conditions]

- 8 bits being written to FBPROT0 while the FRDY bit is 1.
- A value other than 0x78 specified in the KEY bits and 16 bits are written to FBPROT0 while the FRDY bit is 1.
- 0 being written to the BPCN0 bit while writing to FBPROT0 is enabled.
- The FENTRYR register value is 0x0000.

39.4.14 FBPROT1 : Flash Block Protection for Secure Register

Base address: FACI = 0x407F_E000

Offset address: 0x7C

Bit position:	15	14	13	12	11	10	9	8	7	6	5	4	3	2	1	0
Bit field:	KEY[7:0]								—	—	—	—	—	—	—	BPCN1
Value after reset:	0	0	0	0	0	0	0	0	0	0	0	0	0	0	0	0

Bit	Symbol	Function	R/W
0	BPCN1	Block Protection for Secure Cancel 0: Block protection is enabled 1: Block protection is disabled.	R/W*1 *2
7:1	—	These bits are read as 0. The write value should be 0.	R/W
15:8	KEY[7:0]	Key Code	W*3

Note 1. Writing to this bit is only possible when the FRDY bit in the FSTATR register is 1. Writing to this bit while FRDY bit = 0 is ignored.
Note 2. Writing to this bit is only possible when 16 bits are written and the value written to the KEY[7:0] bits is 0xB1.
Note 3. Written values are not retained by these bits (always read as 0x00).

The FBPROT1 register is used to disable the block protect function for secure developer. When the block protect setting is locked by the permanent block setting, it cannot be disabled by this register.

The FBPROT1 value is initialized when the SUINIT bit in the FSUINITR is set to 1, because the FENTRYR value is initialized to 0x0000. It is also initialized by a reset.

BPCN1 bit (Block Protection for Secure Cancel)

The BPCN1 bit disables the block protect setting for secure function.

[Setting condition]

- When the write-enabling conditions are satisfied and the FENTRYR is not 0x0000, write 1 to BPCN1.

[Clearing conditions]

- 8 bits being written to FBPROT1 while the FRDY bit is 1.
- A value other than 0xB1 specified in the KEY bits and 16 bits are written to FBPROT1 while the FRDY bit is 1.
- 0 being written to the BPCN1 bit while writing to FBPROT1 is enabled.
- The FENTRYR register value is 0x0000.

39.4.15 FSTATR : Flash Status Register

Base address: FACI = 0x407F_E000

Offset address: 0x80

Bit position:	31	30	29	28	27	26	25	24	23	22	21	20	19	18	17	16
Bit field:	—	—	—	—	—	—	—	—	ILGCOMERR	FESETERR	SECERR	OTERR	—	—	—	—
Value after reset:	0	0	0	0	0	0	0	0	0	0	0	0	0	0	0	0

Bit position:	15	14	13	12	11	10	9	8	7	6	5	4	3	2	1	0
Bit field:	FRDY	ILGLERR	ERSERR	PRGERR	SUSRDY	DBFULL	ERSSPD	PRGSPD	—	FLWEERR	—	—	—	—	—	—
Value after reset:	1	0	0	0	0	0	0	0	0	0	0	0	0	0	0	0

Bit	Symbol	Function	R/W
5:0	—	These bits are read as 0. The write value should be 0.	R/W
6	FLWEERR	Flash Write/Erase Protect Error Flag 0: An error has not occurred 1: An error has occurred.	R
7	—	These bits are read as 0. The write value should be 0.	R/W
8	PRGSPD	Programming Suspend Status Flag 0: The flash sequencer is not in the programming suspension processing state or programming suspended state 1: The flash sequencer is in the programming suspension processing state or programming suspended state.	R
9	ERSSPD	Erasure Suspend Status Flag 0: The flash sequencer is not in the erasure suspension processing state or the erasure suspended state 1: The flash sequencer is in the erasure suspension processing state or the erasure suspended state.	R
10	DBFULL	Data Buffer Full Flag 0: The data buffer is empty 1: The data buffer is full.	R
11	SUSRDY	Suspend Ready Flag 0: The flash sequencer cannot receive P/E suspend commands 1: The flash sequencer can receive P/E suspend commands.	R
12	PRGERR	Programming Error Flag 0: Programming has completed successfully 1: An error has occurred during programming.	R
13	ERSERR	Erasure Error Flag 0: Erasure has completed successfully 1: An error has occurred during erasure.	R
14	ILGLERR	Illegal Command Error Flag 0: The flash sequencer has not detected an illegal FACI command or illegal flash memory access 1: The flash sequencer has detected an illegal FACI command or illegal flash memory access.	R

Bit	Symbol	Function	R/W
15	FRDY	Flash Ready Flag 0: Program, Block Erase, Multi Block Erase, P/E suspend, P/E resume, Forced Stop, Blank Check, or Configuration set command processing is in progress 1: None of the above is in progress.	R
19:16	—	These bits are read as 0. The write value should be 0.	R/W
20	OTERR	Other Error 0: A status clear or forced stop command processing is complete 1: An error has occurred.	R
21	SECERR	Security Error 0: A status clear or forced stop command processing is complete 1: An error has occurred.	R
22	FESETERR	FENTRY Setting Error 0: A status clear or forced stop command processing is complete 1: An error has occurred.	R
23	ILGCOMERR	Illegal Command Error 0: A status clear or forced stop command processing is complete 1: An error has occurred.	R
31:24	—	These bits are read as 0. The write value should be 0.	R/W

The FSTATR register indicates the state of the flash sequencer.

FLWEERR flag (Flash Write/Erase Protect Error Flag)

The FLWEERR flag indicates a violation of the flash memory overwrite protection setting in the FWEPROR register. When this flag is 1, the flash sequencer is in the command-locked state.

[Setting condition]

- An error has occurred.

[Clearing condition]

- The flash sequencer starts processing the Forced Stop command.

PRGSPD flag (Programming Suspend Status Flag)

The PRGSPD flag indicates that the flash sequencer is in the programming suspension processing state or programming suspended state.

[Setting condition]

- The flash sequencer starts processing in response to the programming suspend command.

[Clearing conditions]

- Reception of the P/E resume command by the flash sequencer (after write access to the FACI command-issuing area is complete)
- The flash sequencer starts processing the Forced Stop command.

ERSSPD flag (Erasure Suspend Status Flag)

The ERSSPD flag indicates that the flash sequencer is in the erasure suspension processing state or erasure suspended state.

[Setting condition]

- The flash sequencer starts processing in response to an erasure suspend command.

[Clearing condition]

- Reception of the P/E resume command by the flash sequencer (after write access to the FACI command-issuing area is complete)
- The flash sequencer starts processing of the Forced Stop command.

DBFULL flag (Data Buffer Full Flag)

The DBFULL flag indicates the state of the data buffer when the program command is issued. The flash sequencer incorporates a buffer for write data (data buffer). When data for writing to the flash memory are written to the FACI command-issuing area while the data buffer is full, the flash sequencer inserts a wait cycle in the peripheral bus.

[Setting condition]

- The data buffer becomes full while program commands are issued.

[Clearing condition]

- The data buffer becomes empty.

SUSRDY flag (Suspend Ready Flag)

The SUSRDY flag indicates whether the flash sequencer can receive a P/E suspend command.

[Setting condition]

- After starting programming/erasure processing, the flash sequencer enters a state in which P/E suspend commands can be received.

[Clearing conditions]

- Reception of the P/E suspend command or Forced Stop command by the flash sequencer (after write access to the FACI command-issuing area is complete)
- During programming or erasure, the flash sequencer enters the command-locked state
- Programming or erasure has completed.

PRGERR flag (Programming Error Flag)

The PRGERR flag indicates the result of programming of the flash memory. When this flag is 1, the flash sequencer is in the command-locked state.

[Setting condition]

- An error has occurred during programming.

[Clearing condition]

- The flash sequencer starts processing of the Status Clear or Forced Stop command.

ERSERR flag (Erasure Error Flag)

The ERSERR flag indicates the result of erasure of the flash memory. When this flag is 1, the flash sequencer is in the command-locked state.

[Setting condition]

- An error has occurred during erasure.

[Clearing condition]

- The flash sequencer starts processing of the Status Clear or Forced Stop command.

ILGLERR flag (Illegal Command Error Flag)

The ILGLERR flag indicates that the flash sequencer has detected an illegal FACI command or flash memory access. If this flag is 1, the flash sequencer is in the command-locked state.

[Setting conditions]

- See section 39.11.2. Error Protection.

[Clearing condition]

- The flash sequencer starts processing of the Status Clear or Forced Stop command.

FRDY flag (Flash Ready Flag)

The FRDY flag indicates the command processing state of the flash sequencer.

[Setting conditions]

- The flash sequencer completes command processing
- The flash sequencer receives a P/E suspend command and suspends programming of the flash memory
- The flash sequencer received the Forced Stop command and ended command processing.

Note: In the case of program command processing, the FRDY flag might be set to 1 even if the flash sequencer does not complete command processing. For details, see section 39.9.3.8. Program Command.

[Clearing conditions]

- The flash sequencer received an FACI command
- For Program and Configuration setting, the first write access to the FACI command-issuing area
- For other commands, the last write access to the FACI command-issuing area.

OTERR flag (Other Error)

See Table 39.22. When this flag is 1, the flash sequencer is in the command-lock state.

[Setting condition]

- An error has occurred.

[Clearing condition]

- The status clear or forced stop command processing is complete.

SECERR flag (Security Error)

See Table 39.22. When this flag is 1, the flash sequencer is in the command-lock state.

[Setting condition]

- An error has occurred.

[Clearing condition]

- The status clear or forced stop command processing is complete.

FESETERR flag (FENTRY Setting Error)

See Table 39.22. When this flag is 1, the flash sequencer is in the command-lock state.

[Setting condition]

- An error has occurred.

[Clearing condition]

- The status clear or forced stop command processing is complete.

ILGCOMERR flag (Illegal Command Error)

See Table 39.22. When this flag is 1, the flash sequencer is in the command-lock state.

[Setting condition]

- An error has occurred.

[Clearing condition]

- The status clear or forced stop command processing is complete.

39.4.16 FENTRYR : Flash P/E Mode Entry Register

Base address: FACI = 0x407F_E000

Offset address: 0x84

Bit position:	15	14	13	12	11	10	9	8	7	6	5	4	3	2	1	0
Bit field:	KEY[7:0]								FENTRYD	—	—	—	—	—	—	FENTRYC
Value after reset:	0	0	0	0	0	0	0	0	0	0	0	0	0	0	0	0

Bit	Symbol	Function	R/W
0	FENTRYC	Code Flash P/E Mode Entry 0: Code flash is in read mode 1: Code flash is in P/E mode.	R/W*1*2
6:1	—	These bits are read as 0. The write value should be 0.	R/W
7	FENTRYD	Data Flash P/E Mode Entry 0: Data flash is in read mode 1: Data flash is in P/E mode.	R/W*1*2
15:8	KEY[7:0]	Key Code	W*3

Note: If the security attribution is configured as Secure:
- Secure access and Non-secure read access are allowed
- Non-secure write access is ignored, and TrustZone access error is not generated.

If the security attribution is configured as Non-secure:
- Secure and Non-secure access are allowed.

Note 1. These bits can be written when the FRDY bit in the FSTATR register is 1. Writing to these bits are ignored when the FRDY bit is 0.
Note 2. Writing to these bits is only possible when 16 bits are written and the value written to the KEY[7:0] bits is 0xAA.
Note 3. Written values are not retained by these bits (always read 0x00).

FENTRYR is used to specify code flash P/E mode or data flash P/E mode. To specify the code flash P/E mode or data flash P/E mode so that the flash sequencer can receive FACI commands, set either the FENTRYD or FENTRYC bit to 1 to place the flash sequencer in P/E mode.

FENTRYR is initialized when the SUINIT bit in FSUINITR is set to 1. It is also initialized by a reset.

Note: Writing a value of 0XAA81 to this register causes the ILGLERR bit in the FSTATR register to be set to 1, resulting in the flash sequencer being placed in the command-locked state.

FENTRYC bit (Code Flash P/E Mode Entry)

The FENTRYC bit specifies P/E mode for the code flash memory.

[Setting condition]

- Write 1 to the FENTRYC bit while writing to FENTRYR is enabled and FENTRYR is 0x0000.

[Clearing conditions]

- Write 8 bits to FENTRYR while the FRDY bit is 1
- A value other than 0xAA is specified in the KEY[7:0] bits and 16 bits are written to FENTRYR while the FRDY bit is 1
- Write 0 to the FENTRYC bit while writing to FENTRYR is enabled
- Write to FENTRYR while writing is enabled and its value is other than 0x0000
- The protection of FMEPROT register is enabled.

FENTRYD bit (Data Flash P/E Mode Entry)

The FENTRYD bit specifies P/E mode for the data flash memory.

[Setting condition]

- Write 1 to the FENTRYD bit while writing to FENTRYR is enabled and FENTRYR is 0x0000.

[Clearing conditions]

- Write 8 bits to FENTRYR while the FRDY bit is 1

- Writing of 16 bits to FENTRYR with a value other than 0xAA specified for the KEY[7:0] bits while the FRDY bit is 1
- Write 0 to the FENTRYD bit while writing to FENTRYR is enabled
- Write to FENTRYR while writing is enabled and its value is other than 0x0000.

KEY[7:0] bits (Key Code)

The KEY[7:0] bits control writing permission to the FENTRYD or FENTRYC bits.

39.4.17 FSUINITR : Flash Sequencer Setup Initialization Register

Base address: FACI = 0x407F_E000

Offset address: 0x8C

Bit position:	15	14	13	12	11	10	9	8	7	6	5	4	3	2	1	0
Bit field:	KEY[7:0]								—	—	—	—	—	—	—	SUINIT
Value after reset:	0	0	0	0	0	0	0	0	0	0	0	0	0	0	0	0

Bit	Symbol	Function	R/W
0	SUINIT	Set-Up Initialization 0: The FSADDR, FEADDR, FBPROT0, FBPROT1, FENTRYR, and FBCCNT flash sequencer setup registers keep their current values 1: The FSADDR, FEADDR, FBPROT0, FBRPOT1, FENTRYR, and FBCCNT flash sequencer setup registers are initialized.	R/W*1*2
7:1	—	These bits are read as 0. The write value should be 0.	R/W
15:8	KEY[7:0]	Key Code	W*3

Note: If the security attribution is configured as Secure:
- Secure access and Non-secure read access are allowed
- Non-secure write access is ignored, and TrustZone access error is not generated.

If the security attribution is configured as Non-secure:
- Secure and Non-secure access are allowed.

Note 1. This bit can be written when the FRDY bit in the FSTATR register is 1. Writing to this bit is ignored when the FRDY bit is 0.
Note 2. Writing to these bits is only possible when 16 bits are written and the value written to the KEY[7:0] bits is 0x2D.
Note 3. Written values are not retained by these bits (always read 0x00).

FSUINITR is used for initialization of the flash sequencer setup.

SUINIT bit (Set-Up Initialization)

The SUINIT bit initializes the following flash sequencer setup registers:

- FSADDR
- FEADDR
- FBPROT0
- FBPROT1
- FENTRYR
- FBCCNT

KEY[7:0] bits (Key Code)

The KEY[7:0] bits control writing permission to the SUINIT bit.

39.4.18 FCMDR : FACI Command Register

Base address: FACI = 0x407F_E000

Offset address: 0xA0

Bit position:	15	14	13	12	11	10	9	8	7	6	5	4	3	2	1	0
Bit field:	CMDR[7:0]								PCMDR[7:0]							
Value after reset:	0	0	0	0	0	0	0	0	0	0	0	0	0	0	0	0

Bit	Symbol	Function	R/W
7:0	PCMDR[7:0]	Pre-command Flag The command just before the latest command is stored.	R
15:8	CMDR[7:0]	Command Flag The latest command is stored.	R

FCMDR records the two most recent commands accepted by the flash sequencer.

PCMDR[7:0] bits (Pre-command Flag)

The PCMDR[7:0] bits indicate the command received immediately before the latest command received by the flash sequencer.

CMDR[7:0] bits (Command Flag)

The CMDR[7:0] bits indicate the latest command received by the flash sequencer.

Table 39.6 States of FCMDR after receiving commands

Command	CMDR	PCMDR
Program	0xE8	Previous command
Block erase	0xD0	0x20
Chip erase	0xD0	0x2F
Status Clear	0x50	Previous command
Forced Stop	0xB3	Previous command
Blank Check	0xD0	0x71
Configuration set	0x40	Previous command

39.4.19 FBCCNT : Blank Check Control Register

Base address: FACI = 0x407F_E000

Offset address: 0xD0

Bit position:	7	6	5	4	3	2	1	0
Bit field:	—	—	—	—	—	—	—	BCDIR
Value after reset:	0	0	0	0	0	0	0	0

Bit	Symbol	Function	R/W
0	BCDIR	Blank Check Direction 0: Blank checking is executed from the lower addresses to the higher addresses (incremental mode) 1: Blank checking is executed from the higher addresses to the lower addresses (decremental mode).	R/W
7:1	—	These bits are read as 0. The write value should be 0.	R/W

Note: If the security attribution is configured as Secure:
- Secure access and Non-secure read access are allowed

- Non-secure write access is ignored, and TrustZone access error is not generated.

If the security attribution is configured as Non-secure:

- Secure and Non-secure access are allowed.

FBCCNT specifies the addressing mode in processing the Blank Check command. FBCCNT is initialized when the SUINIT bit in FSUINITR is set to 1. It is also initialized by a reset.

BCDIR bit (Blank Check Direction)

The BCDIR bit specifies the addressing mode for Blank Check.

39.4.20 FBCSTAT : Blank Check Status Register

Base address: FACI = 0x407F_E000

Offset address: 0xD4

Bit position:	7	6	5	4	3	2	1	0
Bit field:	—	—	—	—	—	—	—	BCST
Value after reset:	0	0	0	0	0	0	0	0

Bit	Symbol	Function	R/W
0	BCST	Blank Check Status Flag 0: Blank check passed. The target area is in the non-programmed state, that is, the area has been erased but has not yet been reprogrammed 1: Blank check failed. The target area has been programmed.	R
7:1	—	These bits are read as 0. The write value should be 0.	R/W

FBCSTAT stores the results of checking in response to the Blank Check command.

BCST flag (Blank Check Status Flag)

The BCST flag indicates the results of checking in response to the Blank Check command.

39.4.21 FBCADDR : Flash Blank Check Address Register

Base address: FACI = 0x407F_E000

Offset address: 0xD8

Bit position:	31																															0
Bit field:	—	—	—	—	—	—	—	—	BCADR[23:0]																							
Value after reset:	0	0	0	0	0	0	0	0	0	0	0	0	0	0	0	0	0	0	0	0	0	0	0	0	0	0	0	0	0	0	0	0

Bit	Symbol	Function	R/W
23:0	BCADR[23:0]	Blank Check Address The first fail address or the last blank checked address.	R
31:24	—	These bits are read as 0. The write value should be 0.	R/W

The FBCADDR register indicates the first fail address (the first address of the programmed area) or the last blank checked address to be found in processing of the Blank Check command.

BCADR[23:0] bits (Blank Check Address)

The BCADR[23:0] bits indicate the offset address from the address where the code flash memory and data flash memory start. When the BCST bit in FBCSTAT register is 1, the first fail address of Blank the Check command is set. After the Blank Check command is interrupted by a Forced Stop command and when the BCST bit in BCSTAT register is 0, the interrupted address of the Blank Check command is set. In other cases, the BCADR[23:0] bits hold the address produced by the previous check. Bits [23:17] are set to 0 when the Blank Check command to data flash memory is passed or interrupted by a Forced Stop command.

39.4.22 FSUASMON : Flash Startup Area Select Monitor Register

Base address: FACI = 0x407F_E000

Offset address: 0xDC

Bit position:	31	30	29	28	27	26	25	24	23	22	21	20	19	18	17	16
Bit field:	BTFLG	—	—	—	—	—	—	—	—	—	—	—	—	—	—	—
Value after reset:	0/1	0	0	0	0	0	0	0	0	0	0	0	0	0	0	0

Bit position:	15	14	13	12	11	10	9	8	7	6	5	4	3	2	1	0
Bit field:	FSPR	—	—	—	—	—	—	—	—	—	—	—	—	—	—	—
Value after reset:	0/1	0	0	0	0	0	0	0	0	0	0	0	0	0	0	0

Bit	Symbol	Function	R/W
14:0	—	These bits are read as 0. The write value should be 0.	R
15	FSPR	Protection Programming Flag to set Boot Flag, Startup Area Control, and Chip Erase 0: Protected state 1: Non-protected state	R
30:16	—	These bits are read as 0. The write value should be 0.	R
31	BTFLG	Flag of Startup Area Select for Boot Swap 0: The startup area is the alternate block (block 1) 1: The startup area is the default block (block 0)	R

FSPR bit (Protection Programming Flag to set Boot Flag, Startup Area Control, and Chip Erase)

The FSPR bit indicates the protection state against the configuration set command for the BTFLG bit, and FSUACR Register. Also, this bit indicates the protection state against the Chip Erase command execution.

In response to a reset or configuration set command, the FACI transfers data from flash memory to this register.

BTFLG bit (Flag of Startup Area Select for Boot Swap)

The BTFLG bit indicates whether the address of the startup area is exchanged for the boot swap function or not.

In response to a reset or configuration set command, the FACI transfers data from flash memory to this register.

39.4.23 FPCKAR : Flash Sequencer Processing Clock Notification Register

Base address: FACI = 0x407F_E000

Offset address: 0xE4

Bit position:	15	14	13	12	11	10	9	8	7	6	5	4	3	2	1	0
Bit field:	KEY[7:0]								PCKA[7:0]							
Value after reset:	0	0	0	0	0	0	0	0	0	0	1	1	0	0	1	0

Bit	Symbol	Function	R/W
7:0	PCKA[7:0]	Flash Sequencer Operating Clock Notification These bits are used to set the operating frequency of the flash sequencer while processing FACI commands.	R/W*1*2
15:8	KEY[7:0]	Key Code	W*3

Note: If the security attribution is configured as Secure:
- Secure access and Non-secure read access are allowed
- Non-secure write access is ignored, and TrustZone access error is not generated.

If the security attribution is configured as Non-secure:
- Secure and Non-secure access are allowed.

Note 1. This bit can be written when the FRDY bit in the FSTATR register is 1. Writing to this bit is ignored when the FRDY bit is 0.

Note 2. Writing to these bits is only possible when 16 bits are written and the value written to the KEY[7:0] bits is 0x1E.

Note 3. Written values are not retained by these bits (always read 0x00).

FPCKAR specifies the operating frequency of the flash sequencer while processing FACI commands. The highest operating frequency for the given product is set as the initial value.

PCKA[7:0] bits (Flash Sequencer Operating Clock Notification)

The PCKA[7:0] bits specify the operating frequency of the flash sequencer while processing FACI commands. Set the desired frequency for these bits before issuing an FACI command. Specifically, convert the frequency in MHz to a binary number and set it for these bits.

Example:

Frequency is 35.9 MHz (PCKA = 0x24)

Round up the first decimal place of 35.9 MHz to a whole number (= 36) and convert it into a binary number.

If the value set in these bits is smaller than the actual operating frequency of the flash sequencer, the flash memory programming/erasure characteristics cannot be guaranteed. If the value set in these bits is greater than the actual operating frequency of the flash sequencer, the flash memory programming/erasure characteristics can be guaranteed but the FACI command processing time such as the time programming/erasure takes will increase. The minimum FACI command processing time is obtained when the operating frequency of the flash sequencer is the same as the PCKA value.

KEY[7:0] bits (Key Code)

The KEY[7:0] bits control writing permission to the PCKA bit.

39.4.24 FSUACR : Flash Startup Area Control Register

Base address: FACI = 0x407F_E000

Offset address: 0xE8

Bit position:	15	14	13	12	11	10	9	8	7	6	5	4	3	2	1	0
Bit field:	KEY[7:0]								—	—	—	—	—	—	SAS[1:0]	
Value after reset:	0	0	0	0	0	0	0	0	0	0	0	0	0	0	0	0

Bit	Symbol	Function	R/W
1:0	SAS[1:0]	Startup Area Select 0 0: Startup area is selected by BTFLG bit 0 1: Startup area is selected by BTFLG bit 1 0: Startup area is temporarily switched to the default area (block0 - block3) 1 1: Startup area is temporarily switched to the alternate area (block4 - block7).	R/W*1 *3
7:2	—	These bits are read as 0. The write value should be 0.	R/W
15:8	KEY[7:0]	Key Code	W*2

Note 1. Following described the write condition of thisese bits (these conditions are required at the same time).
1. Access size to this register is 16 bits
2. The value of KEY[7:0] is 0x66
3. The FSPR bit is 1.

Note 2. Written values are not retained by these bits (always read 0x00).

Note 3. Only secure access can write to this register. Both secure access and non-secure read access are allowed. Non-secure write access is denied, but TrustZone access error is not generated.

FSUACR sets the startup area for the boot swap function. Do not use this register in dual mode (the DUALSEL.BANKMD[2:0] bits are 000b). In dual mode, starting up proceeds from startup area 0.

SAS[1:0] bits (Startup Area Select)

The SAS[1:0] bits select the startup area. Three methods are available for changing the startup area.

KEY[7:0] bits (Key Code)

The KEY[7:0] bits control writing permission to the SAS [1:0] bits.

39.5 Prefetch Buffer

The prefetch buffer speeds up read access from the bus master (CPU instruction fetch, DMA Controller (DMAC), Data Transfer Controller (DTC)) to the code flash memory. For DMAC and DTC, the read access speed is improved only when the source address update mode is set to increment (DMACn.DMAMD.SM [1:0] = 10b, DTC.MRA.SM [1:0] = 10b).

To enable the prefetch buffer, set the PFBER.PFBE bit to 1.

39.6 Operating Modes Associated with Flash Memory

Figure 39.5 shows the mode transitions associated with flash memory. For the procedures of setting the modes, see section 6, Option-Setting Memory.

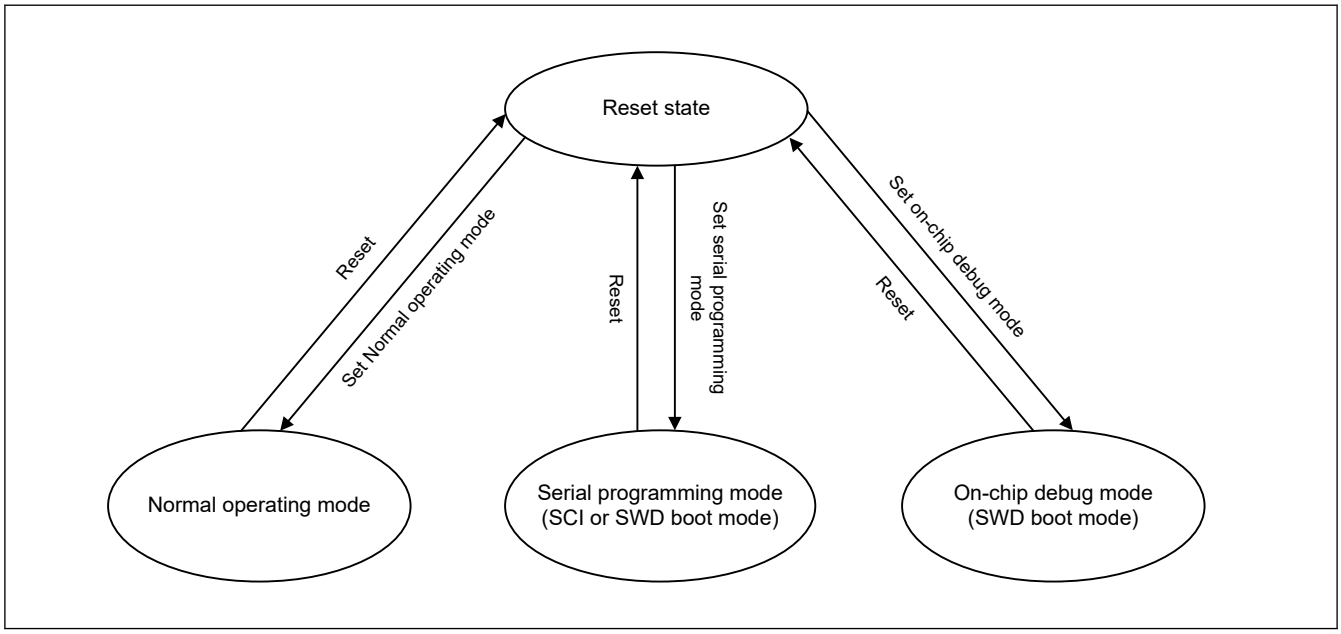

Figure 39.5 Mode transitions associated with flash memory

The flash memory area where programming and erasure are permitted and the boot program after a reset are different according to each mode. The differences between modes are listed in Table 39.7.

Table 39.7 Differences between modes

Parameter	Normal operating mode	Serial programming mode (SCI or SWD boot mode)	On-chip debug mode (SWD boot mode)
Programmable and erasable areas	• Code flash memory • Data flash memory • Option setting memory (programming only)	• Code flash memory • Data flash memory • Option-setting memory (programming only)	• Code flash memory • Data flash memory • Option setting memory (programming only)
Erasure in block units	Possible	Possible	Possible
Boot program at a reset	User area program	Embedded program for serial programming	Depends on debug command

39.7 Overview of Functions

By using a dedicated flash-memory programmer to program the flash memory through a serial interface (serial programming) or SWD interface (on-chip debug mode), the device can be rewritten regardless of whether this is before or after it is mounted on the target system.

Furthermore, security functions to prohibit rewriting or reading of the user program written to the flash memory are incorporated, and this can prevent falsification and illicit reading of the programs by third parties.

Programming by the user program (self-programming) is available to suit applications where the application on the target system may require updating after manufacturing or shipment. Protection features for the safe rewriting of the flash memory are also incorporated. Furthermore, interrupt processing during self-programming is supported, so programming

can proceed at the same time as processing for external communications, etc., and this is the case in various situations. Table 39.8 lists the overview of the methods of programming and the corresponding operating modes.

Table 39.8 Programming methods

Programming method	Functional overview	Operating mode
Serial programming	A dedicated flash-memory programmer through the SCI or SWD interface enables on-board programming of the flash memory after the device is mounted on the target system.	Serial programming mode
	A dedicated flash-memory programmer through the SCI or SWD interface and a dedicated programming adapter board allow off-board programming of the flash memory, for example, programming of the device before it is mounted on the target system.	
Self-programming	A user program written to memory in advance of serial programming execution can also program the flash memory. The background operation capability makes it possible to fetch instructions or otherwise read data from the code flash memory while the data flash memory is programmed. As a result, a program resident in the code flash memory is able to program the data flash memory. For background operations that are not possible, instructions in the code flash memory cannot be fetched and data cannot be accessed while the code flash memory is being programmed by self-programming. In such cases, a program for programming from the internal SRAM or external memory must be transferred in advance and executed.	Normal operating mode
SWD programming	A dedicated flash-memory programmer or an on-chip debugger through SWD enables on-board programming of the flash memory after the device is mounted on the target system. A dedicated flash-memory programmer or an on-chip debugger through SWD and a dedicated programming adapter board allow off-board programming of the flash memory, for example, programming of the device before it is mounted on the target system.	On-chip debug mode

Table 39.9 lists the functions of the flash memory. Serial programmer commands realize each function of serial programming, while reading of the flash memory by an FACI command or the user program realizes each function of self-programming.

Table 39.9 Basic functions (1 of 2)

Function	Functional overview	Availability	
		Serial programming	Self-programming
Blank check	Checks a specified block to ensure that writing to it has not already proceeded. Results of reading from flash memory to which nothing is written after erasure are not guaranteed, so use blank checking to confirm that writing to memory has not proceeded after erasure.	Not supported	Supported
Block erasure	Erases the memory contents in the specified block	Supported	Supported
Programming	Writes to the specified address	Supported	Supported
CRC	Calculates the CRC in the specified range of the flash memory and transfers it to the flash programmer	Supported	Non supported
Read	Reads data programmed in the flash memory	Supported	Not supported (read by user program is possible)
Start-up program protection functions	Configures the start-up program protection functions	Supported	Supported
Option function selection	Selects the option function, and modifies the initial setting of this MCU	Supported	Supported
Dual bank function	Switches different modes (linear or dual)	Supported	Supported
Block swap function	Setting block swap functions	Supported	Supported
Block protection	Setting block protection	Supported	Supported
Device lifecycle transition	Transitions the device lifecycle	Supported	Not supported

Table 39.9 Basic functions (2 of 2)

Function	Functional overview	Availability	
		Serial programming	Self-programming
Memory security attribution	Setting the memory security attribution	Supported	Not supported
Key	Injects key	Supported	Supported (except the key related to device lifecycle transition)
All erasure	Erase the flash memory to the state after shipment	Supported	Not supported

The flash memory supports various security functions.

Table 39.10 lists the security functions supported by the flash memory.

Table 39.10 Lists of Security Functions

Function	Description
Security flag for Start-up area select	Start-up area selection can be protected by setting of security flag (FSPR).
Permanently block protection	Programming or erasure of each block of code flash memory can be protected permanently.
Protection for TrustZone	Programming or erasure area, readable area, register access, and FACI command operation are protected by ARM TrustZone security.
Programming or erasure mode protection	Only secure developer can enter the programming or erasure mode for code flash.

39.8 Operating Modes of the Flash Sequencer

The flash sequencer has four operating modes as shown in Figure 39.6. Transitions between modes are initiated by changing the value of the DFLCTL and FENTRYR register.

After issuing a reset, the flash sequencer is in data flash access disable mode. In this mode, access to the data flash memory is disabled. When DFLEN bit in DFLCTL register is set to 1, the flash sequencer transits to read mode.

When the value of the FENTRYR register is 0x0000, the flash sequencer is in read mode. In this mode, it does not receive FACI commands. The code flash memory and data flash memory are both readable.

When the value of the FENTRYR register is 0x0001, the flash sequencer is in code flash P/E mode where the code flash memory can be programmed or erased by FACI commands. In this mode, the data flash memory is readable. In addition, the code flash memory is not readable if background operation (BGO) is disabled. If BGO is enabled, the code flash memory that is not selected by FSADDR register is readable when the FRDY bit in the FSTATR register is 0. As for the condition for enabling BGO, see section 39.15.2. Background Operation.

When the value of the FENTRYR register is 0x0080, the flash sequencer is in data flash P/E mode where the data flash memory can be programmed or erased by FACI commands. In this mode, the data flash memory is not readable. However, the code flash memory is readable.

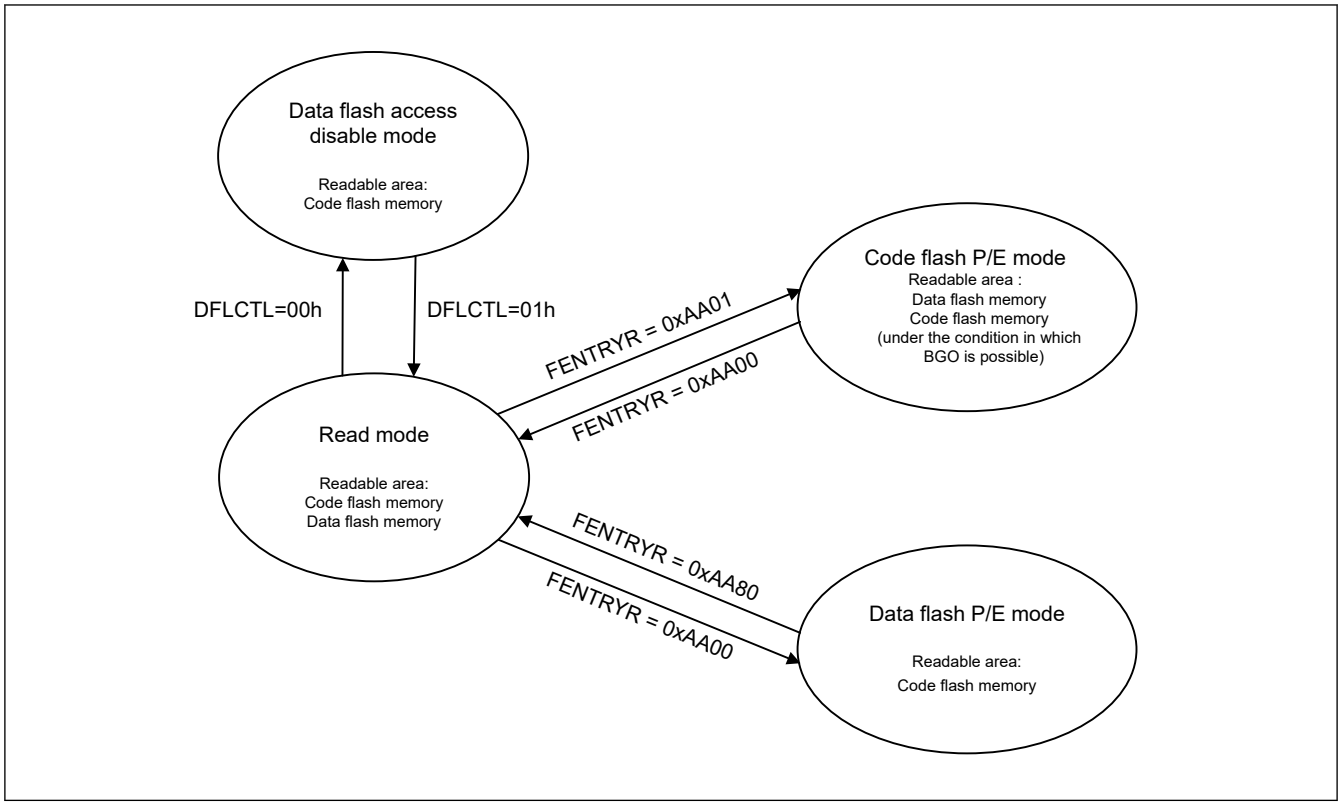

Figure 39.6 Modes of the flash sequencer

39.9 FACI Commands

39.9.1 List of FACI Commands

The FACI controls the FCU according to the specified FACI commands.

This section describes information about the FACI commands and Table 39.11 lists the FACI commands.

Table 39.11 FACI commands

FACI command	Function
Program	Programs the user area and data area. Units of programming are 8 bytes for the user area and 1 byte for the data area.
Block Erase	Erases user area and data area. The erase unit is 2 KB for user area, and 256 bytes for data flash.
Chip Erase	User area and data area can be erased. Erase unit is each macro of code flash and data flash.
Status clear	Initializes the ILGLERR, ERSERR, PRGERR, ILGCOMERR, FESETERR, SECERR, and OTERR bits in the FSTATR register and the CMDLK, CFAE, and DFAE bits in the FASTAT register, and the flash sequencer released from command-locked state.
Forced stop	Forcibly stops processing of FACI commands and initializes the FSTATR and FASTAT registers.
Blank check	Checks if user areas or data areas are blank. Units of Blank Check: 8 bytes to one code flash macro capacity for the user area and 1 byte to data flash macro capacity for data area.
Configuration set	Set the security function and safety function. Units of setting: 16 bytes.

The FACI commands are issued by writing to the FACI command-issuing area (see Table 39.4). When write access as shown in Table 39.12 proceeds in the specified state, the flash sequencer executes the processing associated with the given command (see section 39.9.2. Relationship between the Flash Sequencer State and FACI Commands).

Table 39.12 FACI command formats

FACI commands	Number of write access	Write data to the FACI command-issuing area			
		1st access	2nd access	3rd to (N + 2)th access	(N + 3)th access
Program (user area) N = 4	7	0xE8	0x04 (= N)	WD1 to WD4	0xD0
Program (data area) N = 1	4	0xE8	0x01 (= N)	WD1	0xD0
Block Erase	2	0x20	0xD0	—	—
Chip Erase	2	0x2F	0xD0	—	—
Status Clear	1	0x50	—	—	—
Forced Stop	1	0xB3	—	—	—
Blank Check	2	0x71	0xD0	—	—
Configuration set N = 8	11	0x40	0x08 (= N)	WD1 to WD8	0xD0

Note: WDN (N = 1, 2, …): Nth 16-bit data to be programmed.

The flash sequencer clears the FSTATR.FRDY bit to 0 at the start of a command processing other than the Status Clear command, and sets this bit to 1 on completion.

If the FRDYIE.FRDYIE bit setting is 1, a flash ready (FRDY) interrupt is generated when the FSTATR.FRDY bit is set to 1.

39.9.2 Relationship between the Flash Sequencer State and FACI Commands

The FACI commands are accepted according to the mode/state of the flash sequencer. FACI commands should be issued after transitioning of the flash sequencer to the code flash P/E mode or data flash P/E mode and after checking the state of the flash sequencer.

Use the FSTATR and FASTAT registers to check the state of the flash sequencer. In addition, the occurrence of errors in general can be checked by reading the CMDLK bit in the FASTAT register. The value of the CMDLK bit is the logical OR of the following bits in the FSTATR register:

- ILGLERR
- ILGCOMERR
- FESETERR
- SECERR
- OTERR
- ERSERR
- PRGERR.

Table 39.13 lists the available FACI commands in each operating mode.

Table 39.13 Operating mode and available FACI commands (1 of 2)

Operating mode	FENTRYR	Available FACI commands
Read mode	0x0000	None
Code flash P/E mode	0x0001	Program Block erase Chip Erase Status Clear Forced Stop Blank Check Configuration set

Table 39.13 Operating mode and available FACI commands (2 of 2)

Operating mode	FENTRYR	Available FACI commands
Data flash P/E mode	0x0080	Program Block erase Chip Erase Status Clear Forced Stop Blank Check

Table 39.14 shows the state of the flash sequencer and acceptable FACI commands. An appropriate mode is assumed to have been set before the commands are executed.

Table 39.14 Acceptable FACI commands and state of the flash sequencer

	Processing of other commands except for Forced Stop	Processing of Forced Stop command	Command-Locked State (FRDY = 1)	Command-Locked State (FRDY = 0)	Other state (include Status Clear command processing)
FRDY bit	0	0	1	0	1
CMDLK bit	0	0	1	1	0
Program	X	X	X	X	O
Block Erase	X	X	X	X	O
Chip Erase	X	X	X	X	O
Status Clear	X	X	O	X	O
Forced Stop	O	O	O	O	O
Blank Check	X	X	X	X	O
Configuration set	X	X	X	X	O*1

Note: O: Acceptable
X: Not acceptable (places the sequencer in the command-locked state)
—: Ignored
Note 1. Only acceptable in code flash P/E mode.

39.9.3 Usage of FACI Commands

39.9.3.1 Overview of Command Usage in Code Flash P/E Mode

Figure 39.7 show an overview of FACI command usage in code flash P/E mode. For the available commands in code flash P/E mode, see Table 39.13.

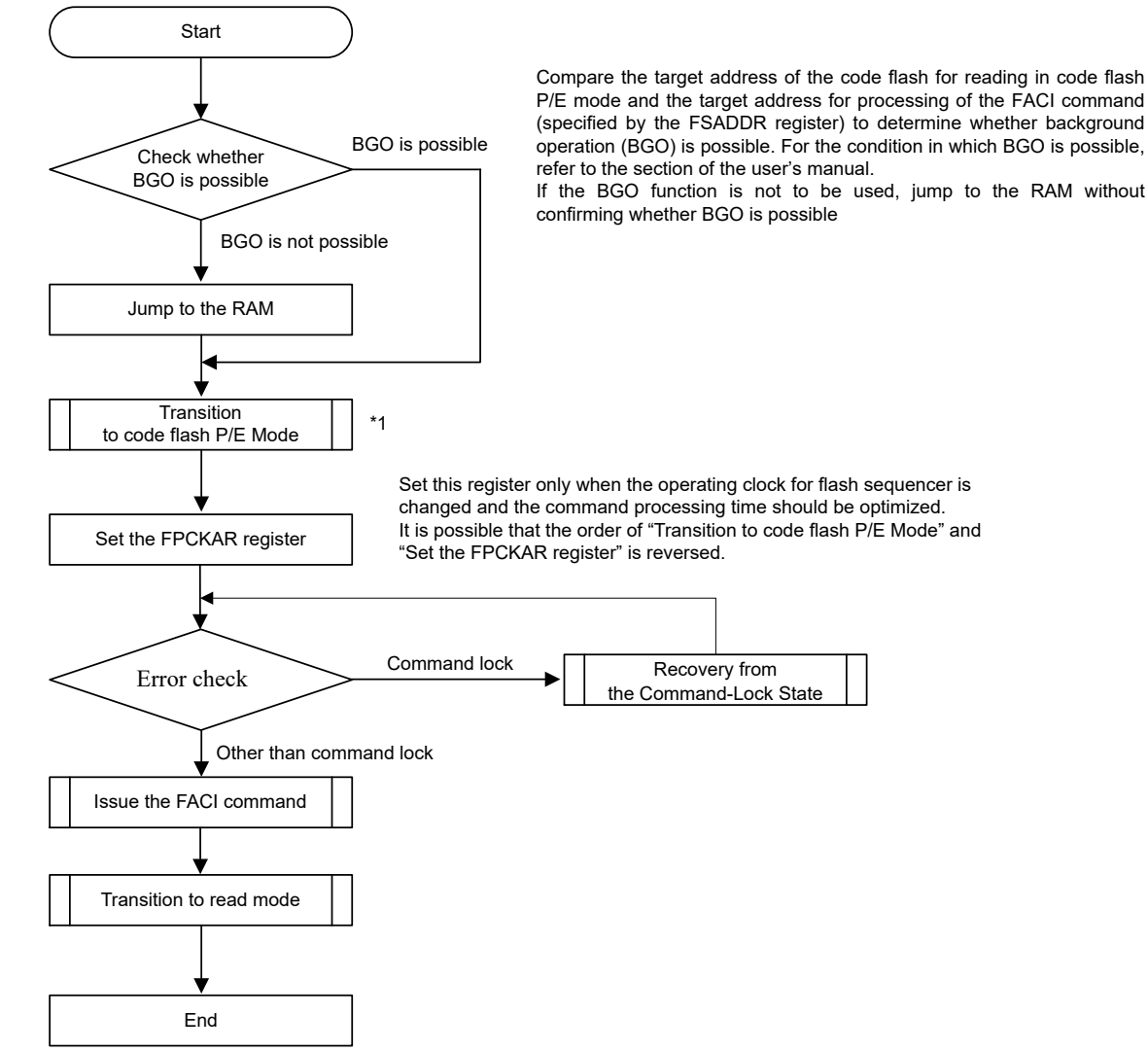

Note 1. See section 39.9.3.4. Transition to Code Flash P/E Mode from Read Mode

Figure 39.7 Overview of command usage in code flash P/E mode

39.9.3.2 Overview of Command Usage in Data Flash P/E Mode

Figure 39.8 shows an overview of FACI command usage in data flash P/E and Table 39.13 lists the available commands in data flash P/E mode.

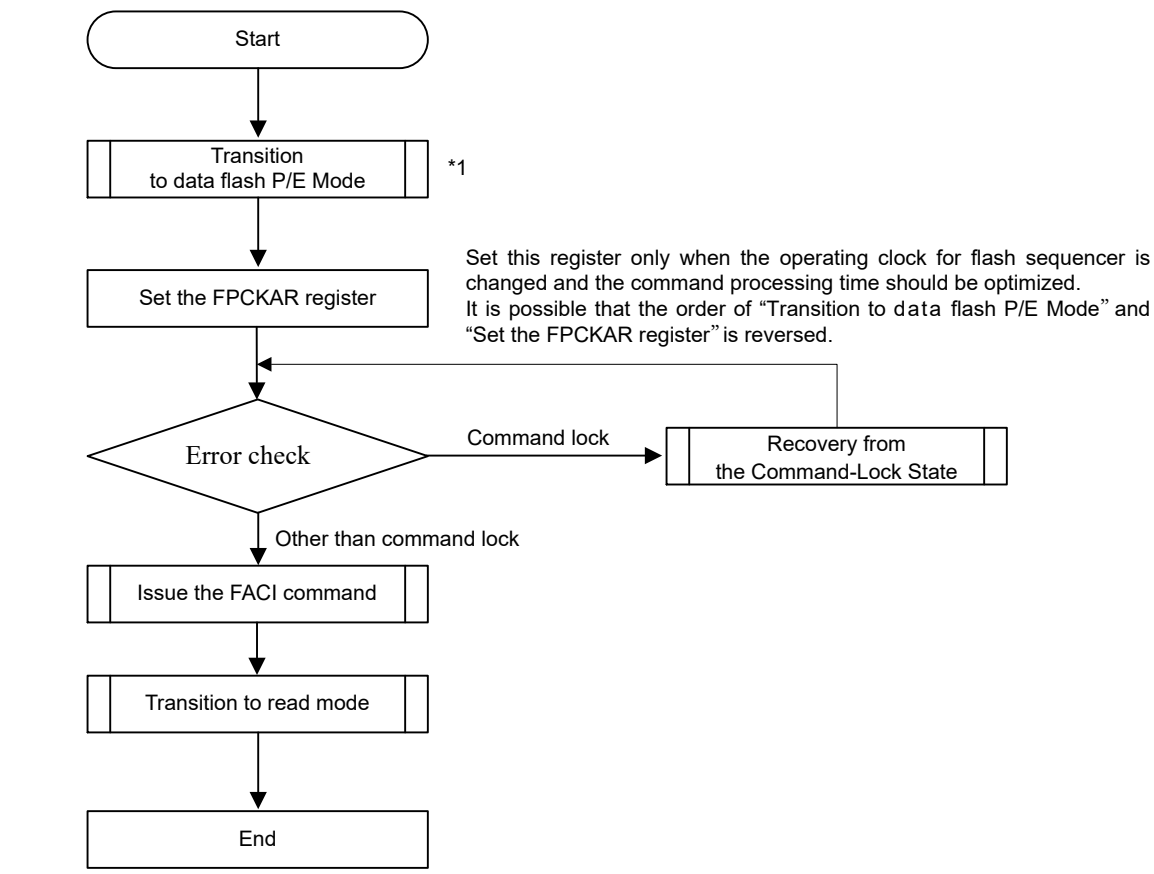

Note 1. See section 39.9.3.5. Transition to Data Flash P/E Mode from Read Mode

Figure 39.8 Overview of command usage in data flash P/E mode

39.9.3.3 Transition to Read Mode from Data Flash Disabled Mode

To read the data flash memory or program/erase the code flash memory or the data flash memory, it is necessary to transit from the data flash disabled mode to read mode. To transition to read mode, set the DFLEN bit in the DFLCTL register to 1. Figure 39.9 shows the procedure for transition to read mode from data flash disabled mode.

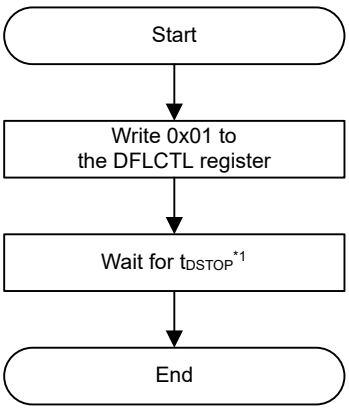

Note 1. Stop recovery time (see section 43, Electrical Characteristics).

Figure 39.9 Procedure for transition to read mode from data flash disabled mode

39.9.3.4 Transition to Code Flash P/E Mode from Read Mode

To issue FACI commands for the code flash memory, a transition to code flash P/E mode is required by setting the FENTRYC bit in the FENTRYR register to 1.

Figure 39.10 shows the procedure to transition to code flash P/E mode.

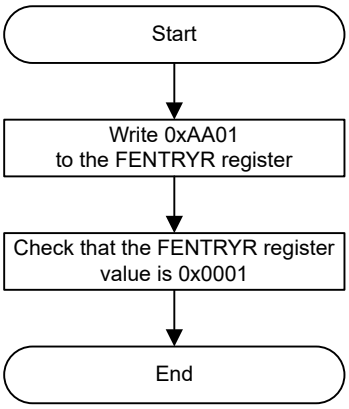

Figure 39.10 Procedure to transition to code flash P/E mode from read mode

39.9.3.5 Transition to Data Flash P/E Mode from Read Mode

To issue FACI commands for the data flash memory, a transition to data flash P/E mode is required by setting the FENTRYD bit in the FENTRYR register to 1.

Figure 39.11 shows the procedure to transition to data flash P/E mode.

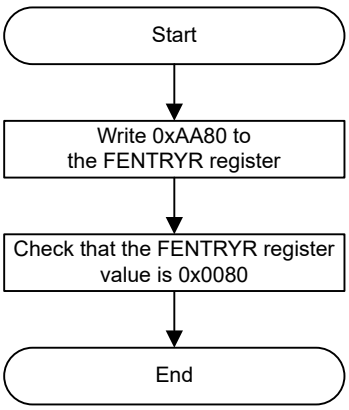

Figure 39.11 Procedure to transition to data flash P/E mode from read mode

39.9.3.6 Transition to Read Mode from Code Flash P/E Mode or Data Flash P/E Mode

To read the flash memory without using the BGO function, a transition to read mode is required by setting the FENTRYR register to 0x0000. The transition to read mode should be made after the flash sequencer completes the processing and while operation is not in the command-locked state.

Figure 39.12 shows the procedure to transition to read mode.

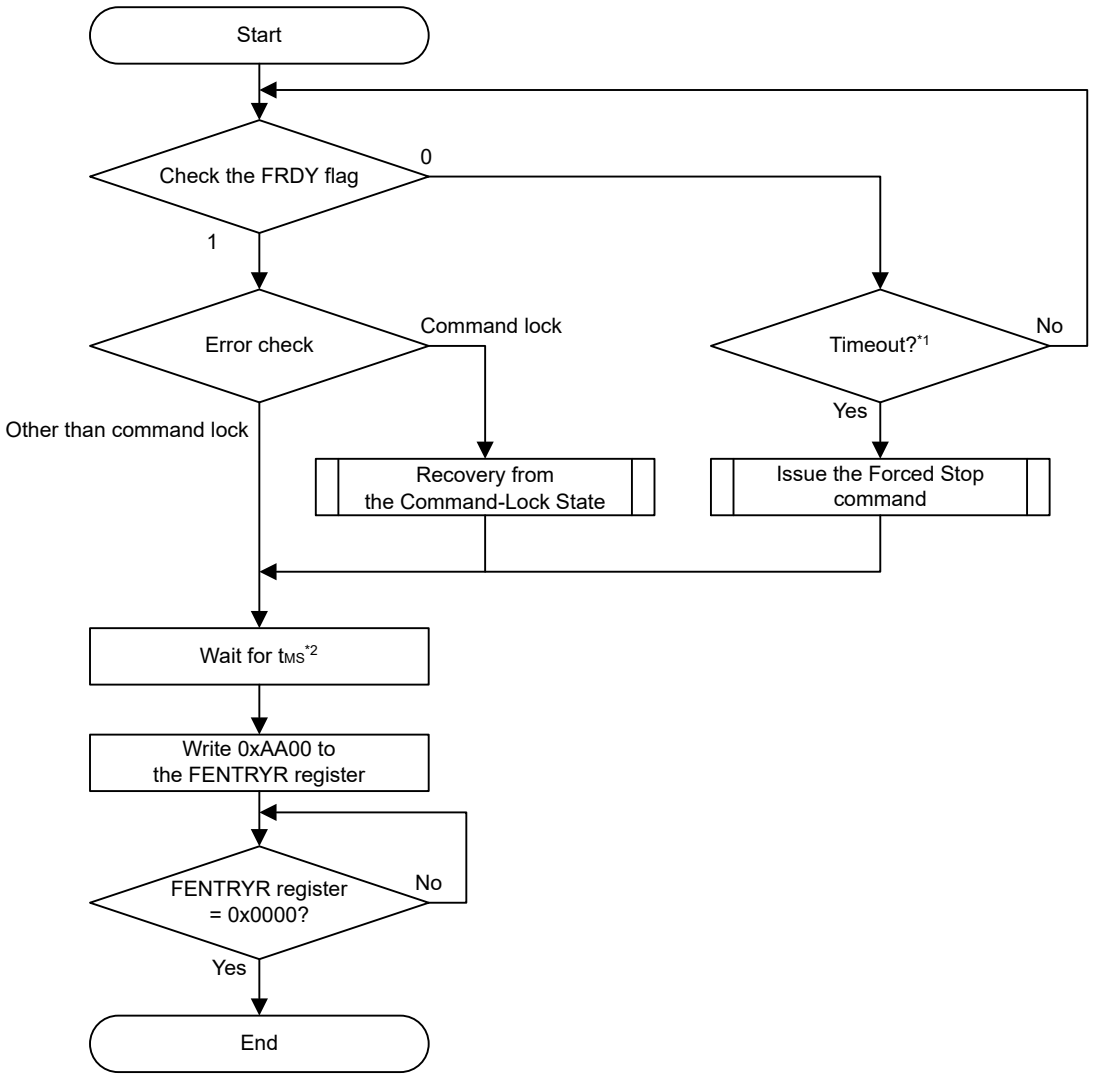

Note 1. Determination of the timeout is based on 1.1 times the maximum time for processing of the FACI command that is in progress (see section 43, Electrical Characteristics)
Note 2. Mode setup time (see section 43, Electrical Characteristics)

Figure 39.12 Procedure to transition to read mode

39.9.3.7 Recovery from the Command-Locked State

When the flash sequencer enters the command-locked state, FACI commands cannot be accepted. To release the sequencer from the command-locked state, use the Status Clear command, Forced Stop command.

If processing is not completed in time beyond the maximum programming/erasure time specified in the electrical characteristics, this can be considered a timeout, and the flash sequencer should be stopped by the Forced Stop command.

When any one of the ILGLERR, ILGCOMERR, FESETERR, SECERR, OTERR, ERSERR or PRGERR bit in the FSTATR register is set to 1, only a Status Clear or Forced Stop command can change from 1 to 0 to release from the command-locked state.

Figure 39.13 shows the recovery flow from the command-locked state.

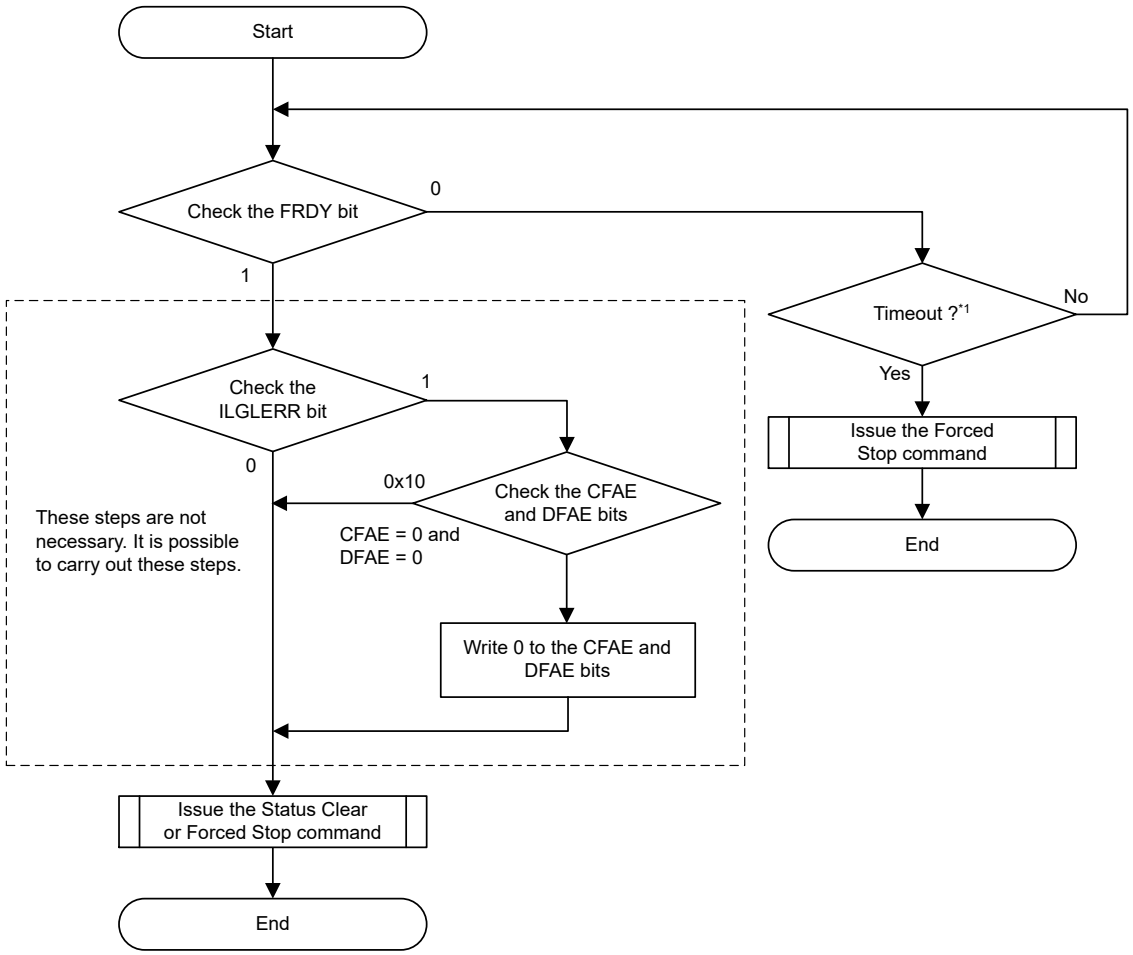

Note 1. Determination of the timeout is based on 1.1 times the maximum time for processing of the FACI command that is in progress (see section 43, Electrical Characteristics).

Figure 39.13 Recovery flow from the command-locked state

39.9.3.8 Program Command

Program commands are used to write to the user and data areas. Before issuing the FACI program command, set the first address of the target block in the FSADDR register.

Program processing is started by writing the last 16 bits of program data (WD64 for code flash and WD2, WD4, and WD8 for data flash in Table 39.12) to the FACI command-issuing area before 0xD0, the final value of the FACI command, is written. Therefore, if it takes time from writing the last 16 bits of program data to writing the final FACI command value 0xD0 (for example, due to interrupt processing), the FSTATR.FRDY bit is set to 1 when program processing is completed even if 0xD0 has not been written. In this case, the program processing has been completed, but the FACI command reception has not been completed. If a subsequent FACI command is issued in this state, an illegal command error will occur. To avoid illegal command errors, disable interrupts with processing that issues FACI commands while program commands are issued (from writing 0xE8 to writing 0xD0).

If the target area for program command processing includes an area that is not for writing, write 0xFFFF to the corresponding area. If a program command is issued while the FACI internal data buffer is full, a wait period may occur on the peripheral bus, which may affect the communication performance of other peripheral modules. To avoid the occurrence of a waiting period, set the DBFULL bit in the FSTATR register to 0 when issuing a FACI command. Writing to the data area will not cause the data buffer to become full.

Figure 39.14 shows the usage of the program command.

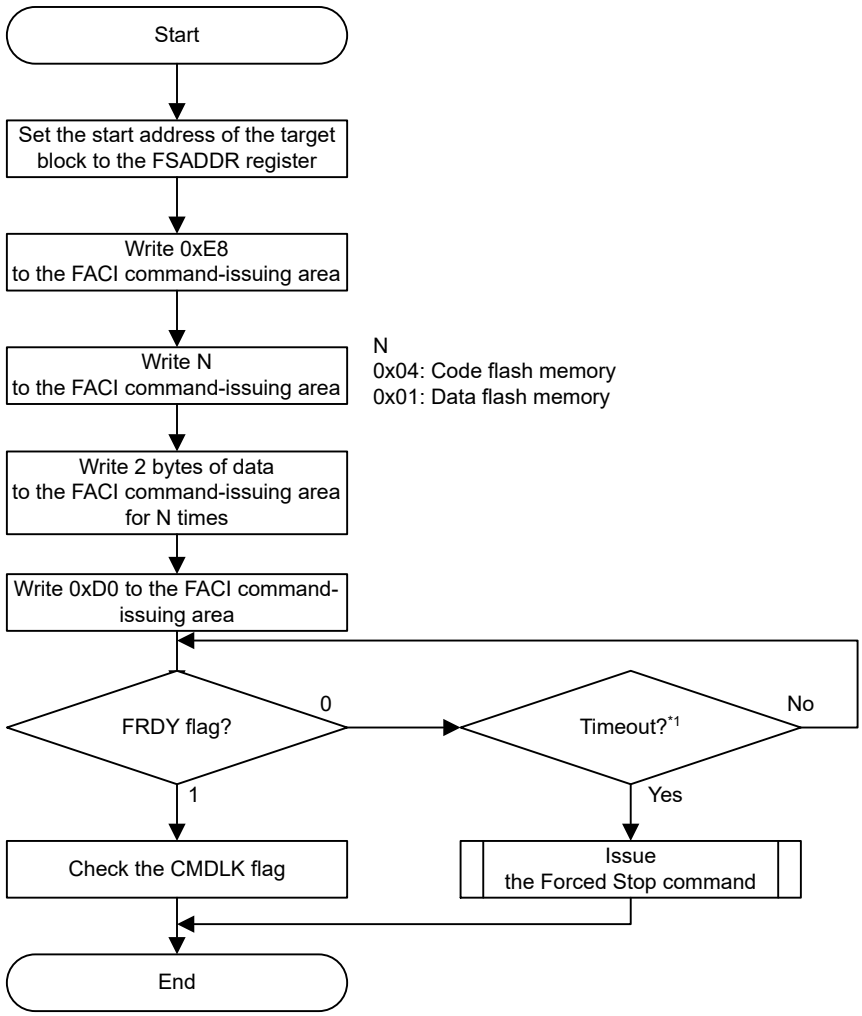

Note 1. Judgment of the timeout is based on 1.1 times the maximum time of programming. See section 43, Electrical Characteristics about those time

Note 2. 1.4 μs (f_{FCLK} ≥ 20 MHz)

Figure 39.14 Usage flow of the program command

39.9.3.9 Block Erase Command

The Block Erase command is used for erasing user area or data area. The erase unit is one block. Before issuing a Block Erase command, set the first address of the target block to FSADDR register. Writing 0xD0 at the second write access of the FACI command triggers the FACI to start the block erase command processing. Completion of command processing can be confirmed with the FRDY bit of FSTATR register.

Figure 39.15 shows the usage of the Block Erase command.

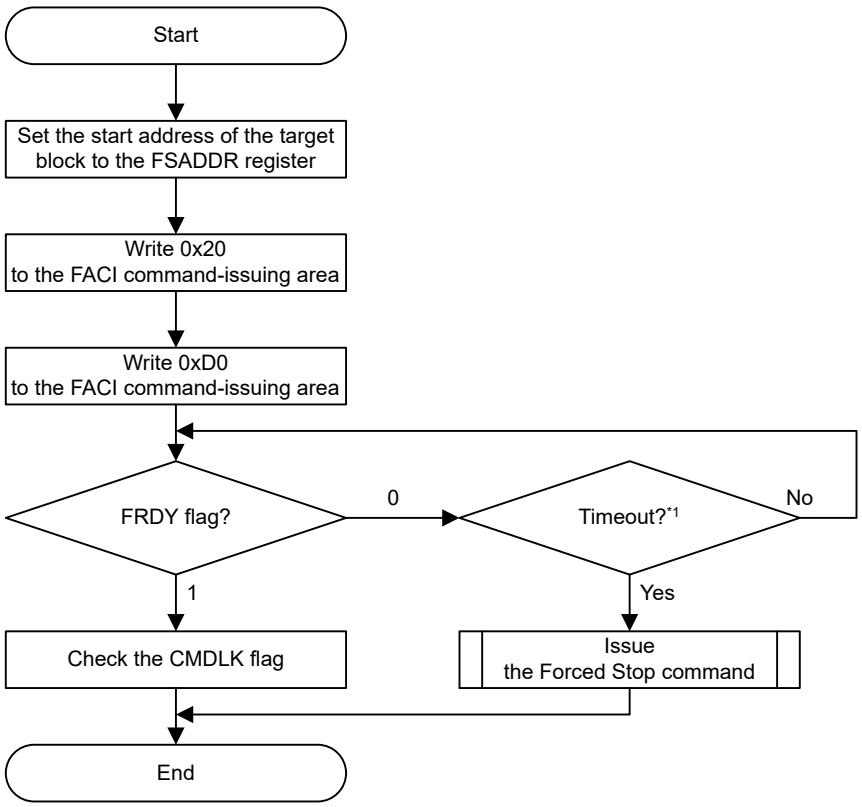

Note 1. Determination of the timeout is based on 1.1 times the maximum time of erasure.
See section 43, Electrical Characteristics.

Figure 39.15 Usage flow of the Block Erase command

39.9.3.10 Chip Erase Command

The Chip Erase command is used for erasing user area or data area. The erase unit is one flash memory macro. Before issuing the Chip Erase command, set the start address of one flash memory macro to FSADDR register and the end address of one flash memory macro to FEADDR register. Writing 0xD0 at the second write access of the FACI command triggers FACI to start the Chip Erase command processing. Completion of command processing can be confirmed with the FRDY bit of FSTATR register.

Figure 39.16 shows usage of the Chip Erase command.

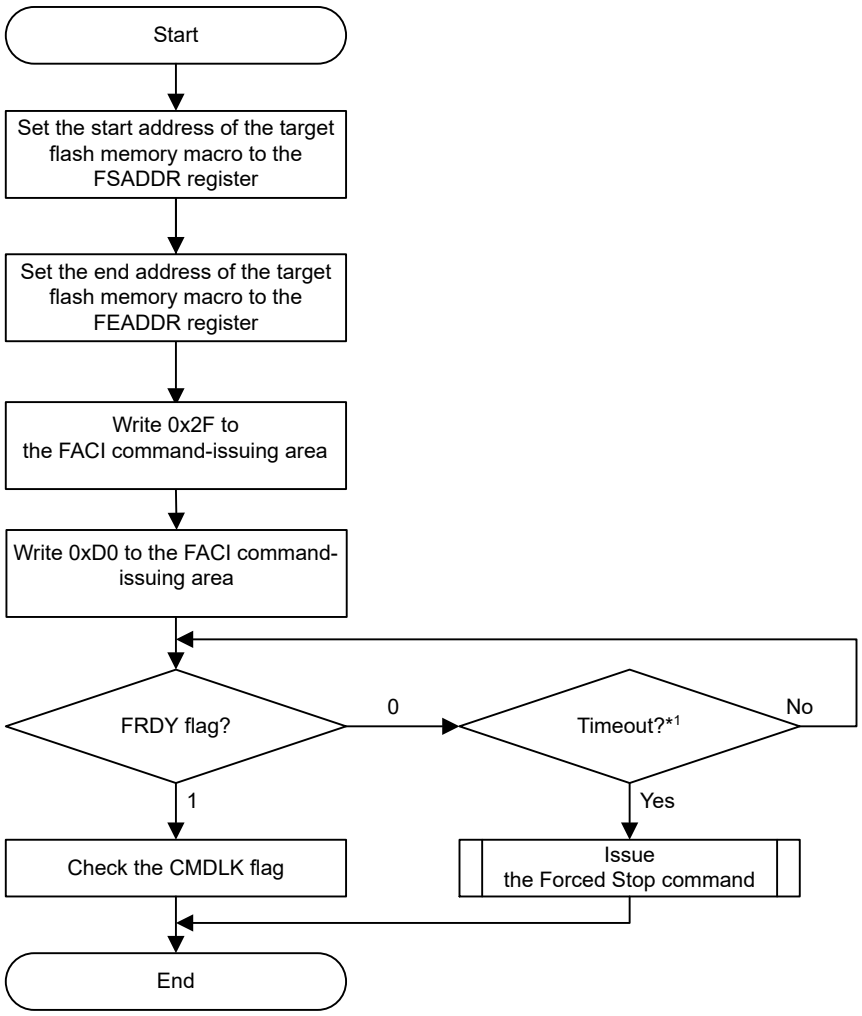

Note 1. Determination of the timeout is based on 1.1 times the maximum time of erasure.
See section 43, Electrical Characteristics for those time.

Figure 39.16 Usage flow of the Chip Erase command

39.9.3.11 Status Clear Command

The status clear command is used to clear the command-locked state (see section 39.9.3.7. Recovery from the Command-Locked State).

You can use the status clear command to clear the following bits in the FSTATR register in the command-locked state:

- ILGLERR
- ILGCOMERR
- FESETERR
- SECERR
- OTERR
- ERSERR
- PRGERR

Figure 39.17 shows usage of the status clear command.

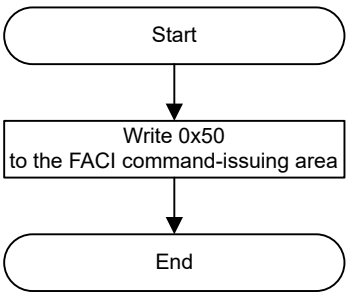

Figure 39.17 Usage flow of the status clear command

39.9.3.12 Forced Stop Command

The Forced Stop command forcibly ends command processing by the flash sequencer. Although this command halts command processing in the shortest latency, values from the programming or erasure that was in progress are not guaranteed. Processing of programming or erasure that was halted by the Forced Stop command is also defined as one from the perspective of programming endurance.

Result of blank checking in FBCSTAT and FBCADDR registers are guaranteed. When there is no error in blank checking, FBCADDR register indicates interrupted blank checking address so that blank check can be restarted from the interrupted address by software copying FBCADDR value to FSADDR.

Executing the Forced Stop command also initializes part of the FACI, the whole FCU, the FSTATR and FASTAT registers. This command can be used in the procedure for recovery from the command-locked state and for processing in response to a timeout of the flash sequencer (see section 39.9.3.7. Recovery from the Command-Locked State).

Figure 39.18 shows usage of the Forced Stop command.

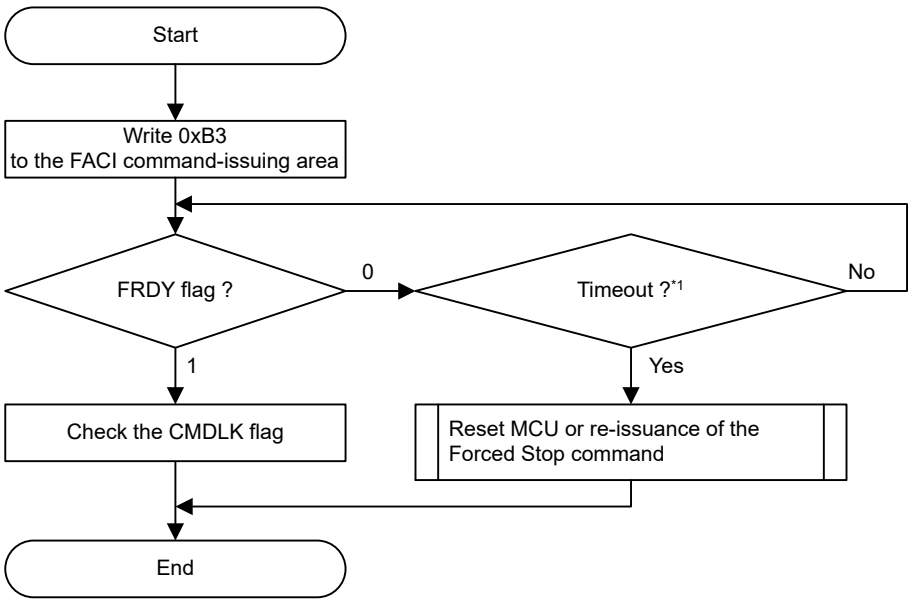

Note 1. Determination of the timeout is based on 1.1 times the maximum time of the Forced Stop command latency (t_{FD}).
See section 43, Electrical Characteristics.

Figure 39.18 Usage flow of the Forced Stop command

39.9.3.13 Blank Check Command

The Blank Check command is used to confirm whether user area or data area is erased.

Before issuing the Blank Check command, set addressing mode, start address, and end address of the target area for Blank Check to the FBCCNT, FSADDR, and FEADDR registers. When Blank Check addressing mode is set to decremental mode (FBCCNT.BCDIR = 1), address specified in FSADDR should be equal to or larger than address in FEADDR.

On the other hand, the address in FSADDR should be equal to or smaller than the address in FEADDR when Blank Check addressing mode is set to incremental mode (FBCCNT.BCDIR = 0).

If the settings of the BCDIR bit, FSADDR, and FEADDR are inconsistent, the flash sequencer enters the command-locked state. The size of the user area for Blank Check is in the range from 8 bytes to one code flash memory capacity and is set in units of 8 bytes. The size of data area for Blank Check is in the range from 1 byte to data flash memory capacity and is set in units of 1 byte.

Write 0x71 and 0xD0 to the FACI command-issuing area to start Blank Check. Completion of processing can be confirmed by the FRDY bit of the FSTATR register. At the end of processing, the result of Blank Check is stored in the BCST bit in the FBCSTAT register. If non-blank data exists within the target area for Blank Check, the flash sequencer stops Blank Check command operation. In this case, address of non-blank data is indicated to FBCADDR register.

When BCDIR = 1, FSADDR is set to non-secure area, and FEADDR is set to secure area, the Blank Check command by non-secure access can be executed. If the address of non-blank data in secure area needs to be closed, all secure area should be written.

Figure 39.19 shows usage of the Blank Check command.

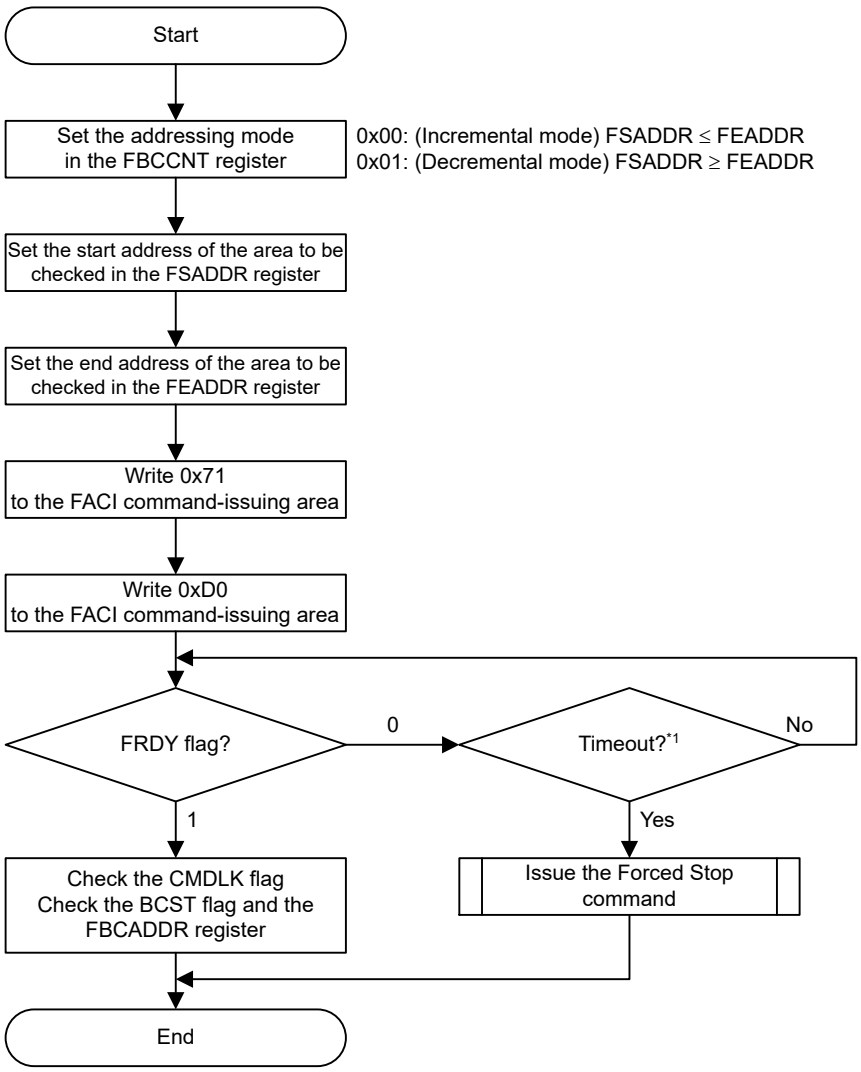

Note 1. Determination of the timeout is based on 1.1 times the maximum time of blank checking for the whole target range. See section 43, Electrical Characteristics.

Figure 39.19 Usage flow of the Blank Check command

39.9.3.14 Configuration Set Command

The Configuration Set command is used to set the security function, safety function and system configuration. Before issuing the Configuration Set command, set the specified address (shown in Table 39.15) in the FSADDR register. Writing 0xD0 to the FACI command-issuing area in the final access for issuing the FACI command starts FACI processing of the Configuration set command.

Figure 39.20 shows usage of the Configuration Set command.

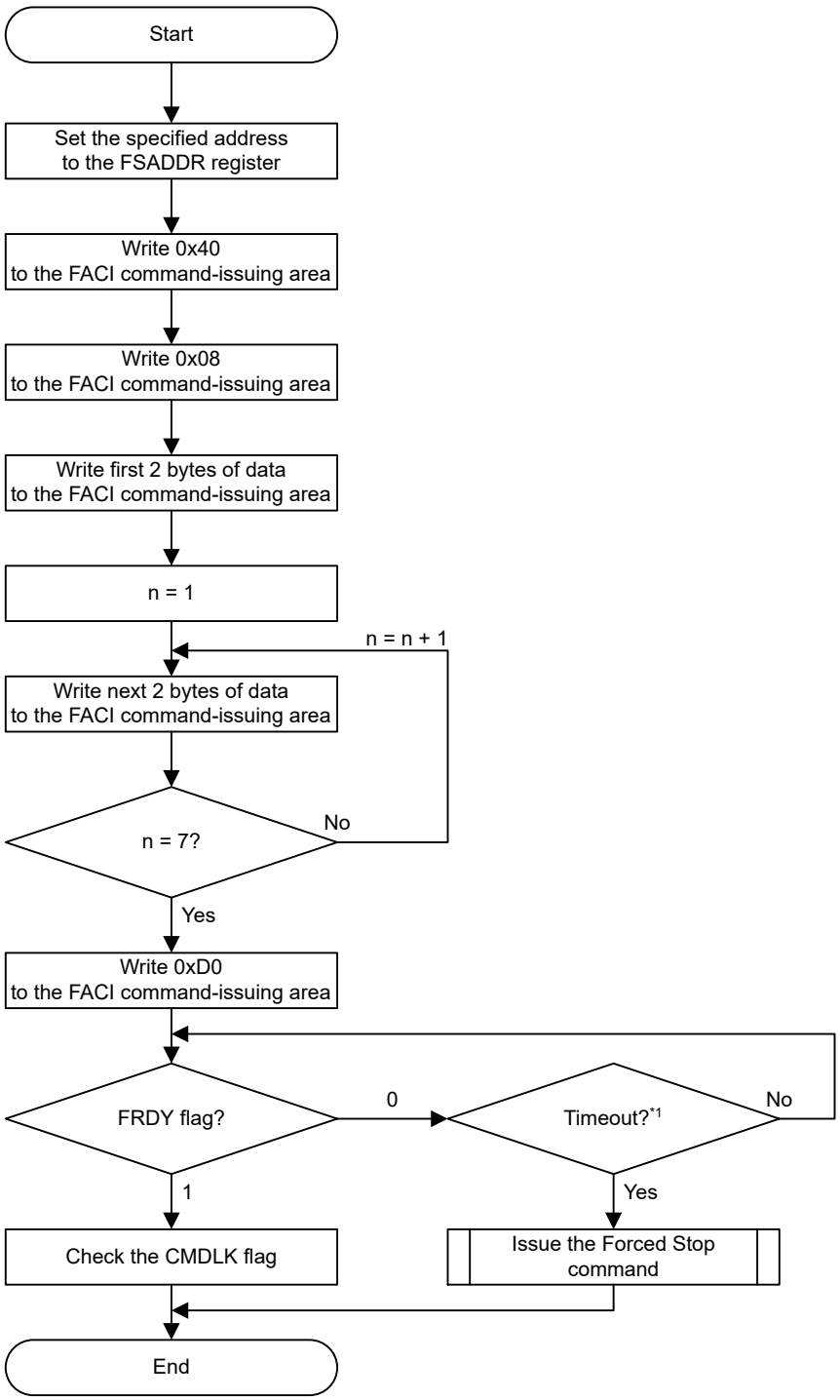

Note 1. Determination of the timeout is based on 1.1 times the maximum time of programming in option-setting memory. See section 43, Electrical Characteristics.

Figure 39.20 Usage flow of the Configuration Set command

The correspondence between the possible target data for configuration setting and the address value set in the FSADDR register is shown in Table 39.15. For details, see section 39.4.10. FSADDR : FACI Command Start Address Register.

Table 39.15 Address used by Configuration Set command

Address	FSADDR register value	Setting data	Operation of additional writing		Timing when the setting is enabled
			SAS.FSPR bit is 1	SAS.FSPR bit is 0	
0x0100_A100	0x0100_A100	Option Function Select Register 0 (OFS0)	Writable	Writable	At a reset
0x0100_A110	0x0100_A110	Dual Mode Select Register (DUALSEL)	Writable	Writable	At a reset
0x0100_A134	0x0100_A130	Start-up Area Setting Register (SAS)	Writable	Not writable*1	When a reset or command is executed
0x0100_A180	0x0100_A180	Option Function Select Register 1 (OFS1)	Writable	Writable	At a reset
0x0100_A190	0x0100_A190	Bank Select Register (BANKSEL)	Writable	Writable	At a reset
0x0100_A1C0	0x0100_A1C0	Block Protect Setting Register (BPS)	Writable*2	Writable*2	When a reset or command is executed
0x0100_A1E0	0x0100_A1E0	Permanent Block Protect Setting Register (PBPS)	Writable*3 (from 1 to 0 only)	Writable*3 (from 1 to 0 only)	When a reset or command is executed
0x0100_A200	0x0100_A200	Option Function Select Register 1 Secure (OFS1_SEC)	Writable	Writable	At a reset
0x0100_A210	0x0100_A210	Bank Select Register Secure (BANKSEL_SEC)	Writable	Writable	At a reset
0x0100_A240	0x0100_A240	Block Protect Setting Register Secure (BPS_SEC)	Writable*4	Writable*4	When a reset or command is executed
0x0100_A260	0x0100_A260	Permanent Block Protect Setting Register Secure (PBPS_SEC)	Writable*5 (from 1 to 0 only)	Writable*5 (from 1 to 0 only)	When a reset or command is executed
0x0100_A280	0x0100_A280	Option Function Select Register 1 Select (OFS1_SEL)	Writable	Writable	At a reset
0x0100_A290	0x0100_A290	Bank Select Register Select (BANKSEL_SEL)	Writable	Writable	At a reset
0x0100_A2C0	0x0100_A2C0	Block Protect Setting Register Select (BPS_SEL)	Writable	Writable	At a reset

Note 1. The SAS.FSPR bit cannot be restored to 1 by using the Configuration Set command once it is set to 0. Therefore, setting the startup area select flags again becomes impossible (when the Configuration Set command is issued to the address of 0x0100A134, the command is locked.) Exercise extra caution when handling the SAS.FSPRbit.
Note 2. Once PBPS[n] bit is set to 0, the BPS[n] bit cannot be restored to 1 by using the Configuration Set command.
Note 3. Once these bits are set to 0, the bits cannot be restored to 1 by using the Configuration Set command. The PBPS[n] bit cannot be set to 0 by using the Configuration Set command when the BPS[n] bit is 1.
Note 4. Once PBPS_SEC[n] bit is set to 0, the BPS_SEC[n] bit cannot be restored to 1 by using the Configuration Set command.
Note 5. Once these bits are set to 0, the bits cannot be restored to 1 by using the Configuration Set command. The PBPS_SEC[n] bit cannot be set to 0 by using the Configuration Set command when the BPS_SEC[n] bit is 1.

39.10 Suspend Operation

The Forced Stop command forces the Blank Check command or Block Erase command to stop. When a forced stop is executed, the stopped address values are stored in the registers. The command can restart from the stopped address after a reset to the registers for command execution by copying the saved addresses. The Forced Stop command forces the Chip Erase command to stop. Afterwards, the Chip Erase command should be executed again.

39.11 Protection Function

39.11.1 Software Protection

Software protection disables programming and erasure of the code flash memory through the settings of control registers and block protect setting in the user area. If an attempt is made to issue an FACI command against software protection, the flash sequencer enters the command-locked state.

39.11.1.1 Protection by FENTRYR

When the FENTRYR register is set to 0x0000, the flash sequencer enters read mode. In read mode, FACI commands cannot be accepted. If an attempt is made to issue an FACI command in read mode, the flash sequencer enters the command-locked state.

39.11.1.2 Protection by Block Protect Setting

Each block protect area in user area has the block protect setting (BPS or BPS_SEC). When the FBPROT0 or FBPROT1 register is 0x0000 and the block protect bit is 0, issuing the Program or Block Erase command to user area of the code flash causes the command-locked state. To program or erase the block protect area whose block protect bit is 0, set the FBPROT0 or FBPROT1 register to 0x0001.

The block protect setting can be locked by the permanent block protect setting (PBPS or PBPS_SEC). When the permanent block protect setting and the block protect setting are 0, issuing a Program, Block Erase, or Chip Erase command to user area of the code flash causes the flash sequencer to enter the command-locked state regardless of the FBPROT0 and FBPROT1 register settings.

Valid block protect setting (BPS or BPS_SEC) depends on the Block Protect Select bit (BPS_SEL).

See section 39.12.2. Permanent Block Protect Setting for details of the block protect setting and permanent block protect setting. See section 39.4.13. FBPROT0 : Flash Block Protection Register and section 39.4.14. FBPROT1 : Flash Block Protection for Secure Register for more information.

For details of block protect setting (BPS or BPS_SEC) and block protect select (BPS_SEL), see section 6, Option-Setting Memory.

The protected area by the block protect setting for Program or Block Erase command is always determined by the address of the FSADDR register setting regardless of the address swapping function setting (the startup area select in linear mode, the block swap in linear mode, and the startup bank select in dual mode). Table 39.16 to Table 39.21 show the relation of user area and the block protect setting in each function setting.

(1) In case of the linear mode

- BPS[0] to BPS[n] or BPS_SEC[0] to BPS_SEC[n] are assigned to the block of user area (for example, address is 0x00_0000 to the last block address).
- BPS[0]/BPS_SEC[0] and BPS[1]/BPS_SEC[1] are assigned to the block of user area depending on the startup area select setting (SAS.BTFLG bit). (See section 39.11.3. Startup Program Protection).
- The second half of FLI user area is assigned to block protect setting depending on the block swap select setting (BANKSEL.BLCKSWP[2:0] bits). See section 39.11.5. Block Swap Function.

Table 39.16 shows the block protect setting when the startup area select is disabled (not swapping) in linear mode.

Table 39.17 show example of the block protect setting when the address conversion function is used in the linear mode.

Table 39.16 Example of block protect setting when SAS.BTFLG is 1 (1 of 2)

FSADDR[23:0]	Block size	Block protect setting	User area block number	Notes
The last block address	32 KB	BPS[n] or BPS_SEC[n]	Block (16n - 96) to (16n - 81)	—
⋮	⋮	⋮	⋮	—
0x01_8000 to 0x01_FFFF	32 KB	BPS[9] or BPS_SEC[9]	Block 48 to 63	—
0x01_0000 to 0x01_7FFF	32 KB	BPS[8] or BPS_SEC[8]	Block 32 to 47	—
0x00_E000 to 0x00_FFFF	8 KB	BPS[7] or BPS_SEC[7]	Block 28 to 31	—
0x00_C000 to 0x00_DFFF	8 KB	BPS[6] or BPS_SEC[6]	Block 24 to 27	—
⋮	⋮	⋮	⋮	—
0x00_2000 to 0x00_3FFF	8 KB	BPS[1] or BPS_SEC[1]	Block 4 to 7	Not swap block 0 to 3 and block 4 to 7 in this startup area select setting

Table 39.16 Example of block protect setting when SAS.BTFLG is 1 (2 of 2)

FSADDR[23:0]	Block size	Block protect setting	User area block number	Notes
0x00_0000 to 0x00_1FFF	8 KB	BPS[0] or BPS_SEC[0]	Block 0 to 3	Not swap block 0 to 3 and block 4 to 7 in this startup area select setting

Table 39.17 Example of block protect setting when SAS.BTFLG is 0

FSADDR[23:0]	Block size	Block protect setting	User area block number	Notes
The last block address	32 KB	BPS[n] or BPS_SEC[n]	Block (16n - 96) to (16n - 81)	—
⋮	⋮	⋮	⋮	—
0x01_8000 to 0x01_FFFF	32 KB	BPS[9] or BPS_SEC[9]	Block 48 to 63	—
0x01_0000 to 0x01_7FFF	32 KB	BPS[8] or BPS_SEC[8]	Block 32 to 47	—
0x00_E000 to 0x00_FFFF	8 KB	BPS[7] or BPS_SEC[7]	Block 28 to 31	—
0x00_C000 to 0x00_DFFF	8 KB	BPS[6] or BPS_SEC[6]	Block 24 to 27	—
⋮	⋮	⋮	⋮	—
0x00_2000 to 0x00_3FFF	8 KB	BPS[1] or BPS_SEC[1]	Block 0 to 3	Swap block 0 to 3 and block 4 to 7 in this startup area select setting
0x00_0000 to 0x00_1FFF	8 KB	BPS[0] or BPS_SEC[0]	Block 4 to 7	Swap block 0 to 3 and block 4 to 7 in this startup area select setting

Table 39.18 Example of block protect setting when BANKSEL.BLCKSWP is 1

FSADDR[23:0]	Block size	Block protect setting	User area block number	Notes
The last block address	32 KB	BPS[n] or BPS_SEC[n]	Block (16n - 96) to (16n - 81)	—
⋮	⋮	⋮	⋮	—
The upper side address of the block swap target	32 KB	BPS[b] or BPS_SEC[b]	Block (16b - 96) to (16b - 81)	Not swap block (16a - 96) to (16a - 81) and block (16b - 96) to (16b - 81) in this block swap select setting
⋮	⋮	⋮	⋮	—
The lower side address of the block swap target	32 KB	BPS[a] or BPS_SEC[a]	Block (16a - 96) to (16a - 81)	Not swap block (16a - 96) to (16a - 81) and block (16b - 96) to (16b - 81) in this block swap select setting
⋮	⋮	⋮	⋮	—
0x01_8000 to 0x01_FFFF	32 KB	BPS[9] or BPS_SEC[9]	Block 48 to 63	—
0x01_0000 to 0x01_7FFF	32 KB	BPS[8] or BPS_SEC[8]	Block 32 to 47	—
0x00_E000 to 0x00_FFFF	8 KB	BPS[7] or BPS_SEC[7]	Block 28 to 31	—
0x00_C000 to 0x00_DFFF	8 KB	BPS[6] or BPS_SEC[6]	Block 24 to 27	—
⋮	⋮	⋮	⋮	—
0x002000 to 0x00_3FFF	8 KB	BPS[1] or BPS_SEC[1]	Block 4 to 7	—
0x00_0000 to 0x00_1FFF	8 KB	BPS[0] or BPS_SEC[0]	Block 0 to 3	—

Table 39.19 Example of block protect setting when BANKSEL.BLCKSWP is 0

FSADDR[23:0]	Block size	Block protect setting	User area block number	Notes
The last block address	32 KB	BPS[n] or BPS_SEC[n]	Block (16n - 96) to (16n - 81)	—
⋮	⋮	⋮	⋮	—
The updating side address of the block swap target	32 KB	BPS[b] or BPS_SEC[b]	Block (16a - 96) to (16a - 81)	Swap block (16a - 96) to (16a - 81) and block (16b - 96) to (16b - 81) in this block swap select setting
⋮	⋮	⋮	⋮	—
The operating side address of the block swap target	32 KB	BPS[a] or BPS_SEC[a]	Block (16b - 96) to (16b - 81)	Swap block (16a - 96) to (16a - 81) and block (16b - 96) to (16b - 81) in this block swap select setting
⋮	⋮	⋮	⋮	—
0x01_8000 to 0x01_FFFF	32 KB	BPS[9] or BPS_SEC[9]	Block 48 to 63	—
0x01_0000 to 0x01_7FFF	32 KB	BPS[8] or BPS_SEC[8]	Block 32 to 47	—
0x00_E000 to 0x00_FFFF	8 KB	BPS[7] or BPS_SEC[7]	Block 28 to 31	—
0x00_C000 to 0x00_DFFF	8 KB	BPS[6] or BPS_SEC[6]	Block 24 to 27	—
⋮	⋮	⋮	⋮	—
0x00_2000 to 0x00_3FFF	8 KB	BPS[1] or BPS_SEC[1]	Block 4 to 7	—
0x00_0000 to 0x00_1FFF	8 KB	BPS[0] or BPS_SEC[0]	Block 0 to 3	—

(2) In case of the dual mode (DUALSEL.BANKMD[2:0] = 000b)

Bank0 is lower side bank (BANKSEL.BANKSWP[2:0] = 111b).

- BPS[0] to BPS[n] or BPS_SEC[0] to BPS_SEC[n] are assigned the block of bank 0 user area (for example, address is 0x00000000 to the last block address in the lower side bank).
- BPS[70] to BPS[70 + n] or BPS_SEC[70] to BPS_SEC[70 + n] are assigned to the block of bank 1 user area (for example, address is 0x00200000 to the last block address in the upper side bank).

Bank0 is upper side bank (BANKSEL.BANKSWP[2:0] = 000b)

- BPS[0] to BPS[n] or BPS_SEC[0] to BPS_SEC[n] are assigned to the block of bank1 user area (e.g. Address is 0x00_0000 to The last block address in lower side bank).
- BPS[70] to BPS[70+n] or BPS_SEC[70] to BPS_SEC[70+n] are assigned to the block of bank0 user area (e.g. Address is 0x20_0000 to The last block address in upper side bank).

Table 39.20 and Table 39.21 show example of the block protect setting in the dual mode. See section 39.11.4. Dual Bank Function for details of dual bank function (DUALSEL.BANKMD[2:0] and BANKSEL.BANKSWP[2:0] bits).

Table 39.20 Example of block protect setting when BANKSEL.BANKSWP[2:0] is 111b

FSADDR[23:0]	Block size	Block protect setting	User area block number	Notes
The last block address in upper side bank	32 KB	BPS[70 + n] or BPS_SEC[70 + n]	Block (16n + 928) to (16n + 943)	Not swap bank 0 and bank 1 in this startup bank switch setting
⋮	⋮	⋮	⋮	
0x21_8000 to 0x21_FFFF	32 KB	BPS[79] or BPS_SEC[79]	Block 1072 to 1087	
0x21_0000 to 0x21_7FFF	32 KB	BPS[78] or BPS_SEC[78]	Block 1056 to 1071	
0x20_E000 to 0x20_FFFF	8 KB	BPS[77] or BPS_SEC[77]	Block 1052 to 1055	
0x20_C000 to 0x20_DFFF	8 KB	BPS[76] or BPS_SEC[76]	Block 1048 to 1051	
⋮	⋮	⋮	⋮	
0x20_2000 to 0x20_3FFF	8 KB	BPS[71] or BPS_SEC[71]	Block 1028 to 1031	
0x20_0000 to 0x20_1FFF	8 KB	BPS[70] or BPS_SEC[70]	Block 1024 to 1027	
The last block address in lower side bank	32 KB	BPS[n] or BPS_SEC[n]	Block (16n - 96) to (16n - 81)	Not swap bank 0 and bank 1 in this startup bank switch setting
⋮	⋮	⋮	⋮	
0x01_8000 to 0x01_FFFF	32 KB	BPS[9] or BPS_SEC[9]	Block 48 to 63	
0x01_0000 to 0x01_7FFF	32 KB	BPS[8] or BPS_SEC[8]	Block 32 to 47	
0x00_E000 to 0x00_FFFF	8 KB	BPS[7] or BPS_SEC[7]	Block 28 to 31	
0x00_C000 to 0x00_DFFF	8 KB	BPS[6] or BPS_SEC[6]	Block 24 to 27	
⋮	⋮	⋮	⋮	
0x00_2000 to 0x00_3FFF	8 KB	BPS[1] or BPS_SEC[1]	Block 4 to 7	
0x00_0000 to 0x00_1FFF	8 KB	BPS[0] or BPS_SEC[0]	Block 0 to 3	

Table 39.21 Relation of user area and block protect setting when BANKSEL.BANKSWP[2:0] is 000b (1 of 2)

FSADDR[23:0]	Block size	Block protect setting	User area block number	Notes
The last block address in the upper side bank	32 KB	BPS[70 + n] or BPS_SEC[70 + n]	Block (16n - 96) to (16n - 81)	Swap bank 0 and bank 1 in this startup bank switch setting
⋮	⋮	⋮	⋮	
0x21_8000 to 0x21_FFFF	32 KB	BPS[79] or BPS_SEC[79]	Block 48 to 63	
0x21_0000 to 0x21_7FFF	32 KB	BPS[78] or BPS_SEC[78]	Block 32 to 47	
0x20_E000 to 0x20_FFFF	8 KB	BPS[77] or BPS_SEC[77]	Block 28 to 31	
0x20_C000 to 0x20_DFFF	8 KB	BPS[76] or BPS_SEC[76]	Block 24 to 27	
⋮	⋮	⋮	⋮	
0x20_2000 to 0x20_3FFF	8 KB	BPS[71] or BPS_SEC[71]	Block 4 to 7	
0x20_0000 to 0x20_1FFF	8 KB	BPS[70] or BPS_SEC[70]	Block 0 to 3	

Table 39.21 Relation of user area and block protect setting when BANKSEL.BANKSWP[2:0] is 000b (2 of 2)

FSADDR[23:0]	Block size	Block protect setting	User area block number	Notes
The last block address in the lower side bank	32 KB	BPS[n] or BPS_SEC[n]	Block (16n + 928) to (16n + 943)	Swap bank 0 and bank 1 in this startup bank switch setting
⋮	⋮	⋮	⋮	
0x01_8000 to 0x01_FFFF	32 KB	BPS[9] or BPS_SEC[9]	Block 1072 to 1087	
0x01_0000 to 0x01_7FFF	32 KB	BPS[8] or BPS_SEC[8]	Block 1056 to 1071	
0x00_E000 to 0x00_FFFF	8 KB	BPS[7] or BPS_SEC[7]	Block 1052 to 1055	
0x00_C000 to 0x00_DFFF	8 KB	BPS[6] or BPS_SEC[6]	Block 1048 to 1051	
⋮	⋮	⋮	⋮	
0x00_2000 to 0x00_3FFF	8 KB	BPS[1] or BPS_SEC[1]	Block 1028 to 1031	
0x00_0000 to 0x00_1FFF	8 KB	BPS[0] or BPS_SEC[0]	Block 1024 to 1027	

39.11.2 Error Protection

Error protection detects the issuing of illegal FACI commands, illegal access, and flash sequencer malfunction. FACI command acceptance is disabled (command-locked state) in response to the detection of these errors. The flash memory cannot be programmed or erased while the flash sequencer is in the command-locked state. For release from the command-locked state, issue the Status Clear or Forced Stop command. The Status Clear command can only be used while the FRDY bit in the FSTATR register is 1. The Forced Stop command can be used regardless of the value of the FRDY bit. While the CMDLKIE bit in the FAEINT register is 1, a flash access error (FIFERR) interrupt is generated if the flash sequencer enters the command-locked state (the CMDLK bit in the FASTAT register is set to 1).

If the flash sequencer enters the command-locked state in response to a command during programming or erasure processing, the flash sequencer continues the processing for programming or erasure. If a command is issued in the command-locked state, the ILGLERR bit becomes 1 and the other bits retain the values set from previous error detection.

Table 39.22 shows the error protection types and status bit values after error detections.

Table 39.22 Error protection type (1 of 3)

Error type	Description	ILGCOMERR	FESETERR	SECERR	OTERR	ILGLERR	ERSERR	PRGERR	CFAE	DFAE
FENTRYR setting error	The value set in FENTRYR is not 0x0000, 0x0001, or 0x0080	0	1	0	0	1	0	0	0	0

Table 39.22 Error protection type (2 of 3)

Error type	Description	ILGCOMERR	FESETERR	SECERR	OTERR	ILGLERR	ERSERR	PRGERR	CFAE	DFAE
Illegal command error	An undefined size is specified in the first cycle of the command (not byte-write)	1	0	0	0	1	0	0	0	0
	An undefined code is written in the first access of the FACI command	1	0	0	0	1	0	0	0	0
	The value specified in the last access of the multiple-access FACI command is not 0xD0	1	0	0	0	1	0	0	0	0
	The value (N) specified in the second write access of the FACI command in the program or configuration set command is wrong	1	0	0	0	1	0	0	0	0
	Blank Check command is issued with inconsistent BCDIR, FSADDR, and FEADDR settings (see section 39.4.11. FEADDR : FACI Command End Address Register)	1	0	0	0	1	0	0	0/1*1	0/1*1
	A Chip Erase command is issued with inconsistent FSADDR and FEADDR settings. ● FSADDR > FEADDR ● FEADDR is set to reserved area	1	0	0	0	1	0	0	0/1*1	0/1*1
	A FACI command not acceptable in each mode is issued (see Table 39.13)	1	0	0	0	1	0	0	0	0
	A FACI command is issued when command acceptance conditions are not satisfied (see Table 39.14)	0/1	0/1	0/1	0/1	1	0/1	0/1	0/1	0/1
	A Program or Block Erase command is issued against the area protected by the block protect setting (see section 39.11.1.2. Protection by Block Protect Setting)	1	0	0	0	1	0	0	0	0
	A Chip Erase command is issued when any of the user area block is protected by the block protect setting (see section 39.11.1.2. Protection by Block Protect Setting)	1	0	0	0	1	0	0	0	0
Erase error	An error occurs during erasure	0	0	0	0	0	1	0	0	0
Program error	An error occurs during programming	0	0	0	0	0	0	1	0	0
Code flash access error	Program or Block Erase command is issued to the reserved user area in code flash P/E mode (see section 39.4.7. FASTAT : Flash Access Status Register)	0	0	0	0	1	0	0	1	0
	Chip Erase or Blank Check command is issued to reserved user area in code flash P/E mode (FSADDR is set to reserved user area)	1	0	0	0	1	0	0	1	0
	Configuration set command is issued to reserved configuration area	0	0	0	0	1	0	0	1	0
	Configuration Set command of non-secure access is issued to the secure region of configuration area	0	0	0	0	1	0	0	1	0
	Program, Block Erase or Blank Check command is issued to the secure region of configuration area	0/1	0	0	0	1	0	0	1	0

Table 39.22 Error protection type (3 of 3)

Error type	Description	ILGCOMERR	FESETERR	SECERR	OTERR	ILGLERR	ERSERR	PRGERR	CFAE	DFAE
Data flash access violation	A Program or Block Erase command is issued to the reserved data area in data flash P/E mode	0	0	0	0	1	0	0	0	1
	A Chip Erase or Blank Check command is issued to the reserved data area in data flash P/E mode (FSADDR is set to reserved data area.)	1	0	0	0	1	0	0	0	1
	A Program, Block Erase or Blank Check command of non-secure access is issued to the secure region of data area	0/1	0	0	0	1	0	0	0	1
Security error	Configuration set command for the SAS.BTFLG bit setting is issued when the SAS.FSPR bit is 0 (see section 39.9.3.14. Configuration Set Command)	0	0	1	0	1	0	0	0	0
	A Chip Erase command is issued when the FSPR bit is 0	0	0	1	0	1	0	0	0	0
Others	A FACI command-issuing area is accessed in read mode	0	0	0	1	1	0	0	0	0
	An FACI command-issuing area is read in code flash P/E mode or data flash P/E mode	0	0	0	1	1	0	0	0	0

Note 1. A value depends on the FSADDR setting.

39.11.3 Startup Program Protection

Protection of the startup program is for protection of the program to be started after a reset (the startup program). This function provides a way to safely update the startup program when rewriting is suspended during a reset.

The startup area is 8 KB in size and is assigned to the user area in the code flash memory. This function uses the values of the SAS.BTFLG bit and the FSUACR.SAS[1:0] bits to change the area where the startup program is stored in block units (see Figure 39.21 to Figure 39.24).

In protection of the startup program, the state of the selection of the startup area can be fixed by the FSPR bit. However, the SAS.FSPR bit never be restored to 1 once the flag is set to 0. Exercise extra caution when handling the SAS.FSPR bit.

In addition, this protection cannot be used when dual mode is selected by the bank mode switching function (when the BANKMD[2:0] bits are 000b).

For details of SAS.FSPR bit and DUALSEL.BANKMD[2:0] bits, see section 6, Option-Setting Memory.

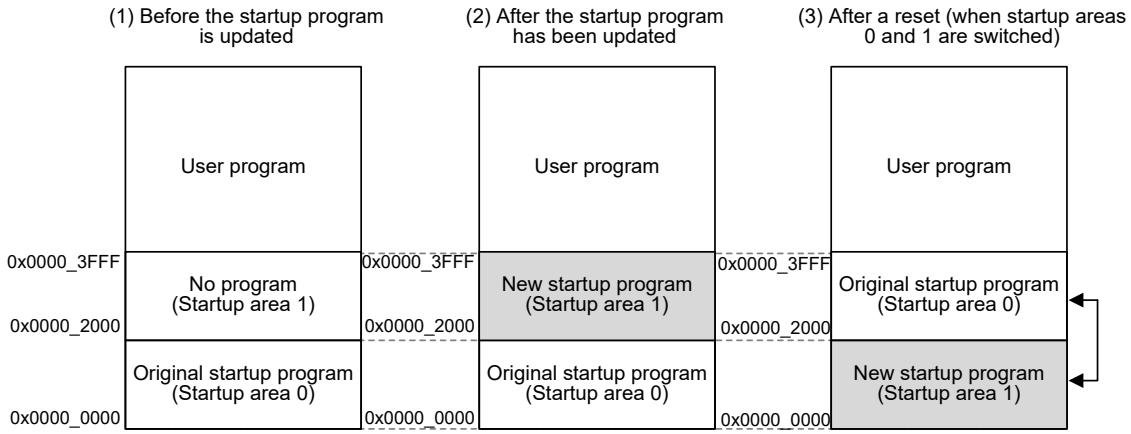

Note: The addresses are used for reading, programming, and erasure. Startup area 0 is erased when Block Erase command is issued for the address rage from 0x00000000 to 0x00001FFF with allocation shown under 3.

1. Before the startup program is updated
   When the SAS.BTFLG bit is 1 and the FSUACR.SAS[1:0] bits are 0xb, the address range from 0x00002000 to 0x00003FFF is selected as startup area 1 and the address range from 0x00000000 to 0x00001FFF is selected as startup area 0.
2. After the startup program has been updated
   A new startup program can be written to startup area 1. At this time, startup area 0 still contains the previous startup program, so rewriting by starting up from startup area 0 remains possible if rewriting to the startup area 1 fails.
3. After a reset (when startup areas 0 and 1 are switched)
   When rewriting startup area 1 is successfully completed, switch the assignment of startup areas 0 and 1 by rewriting the startup area selection bit (the SAS.BTFLG bit) with Configuration Set command. Afterwards, the program is started up from startup area 1 after a reset.

Figure 39.21 Concept of protection of the startup program

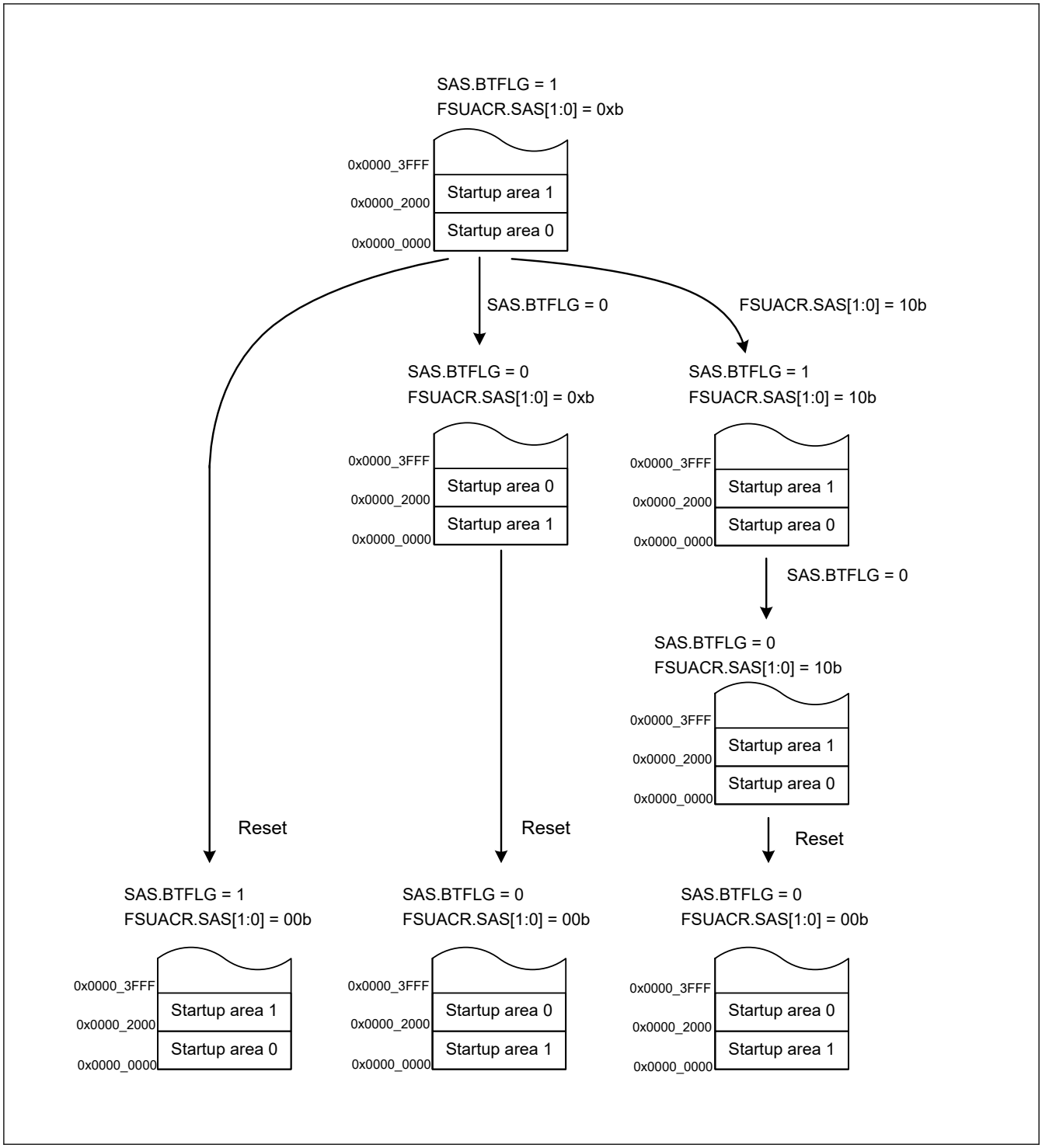

Figure 39.22 Example 1 of transitions for startup program protection settings

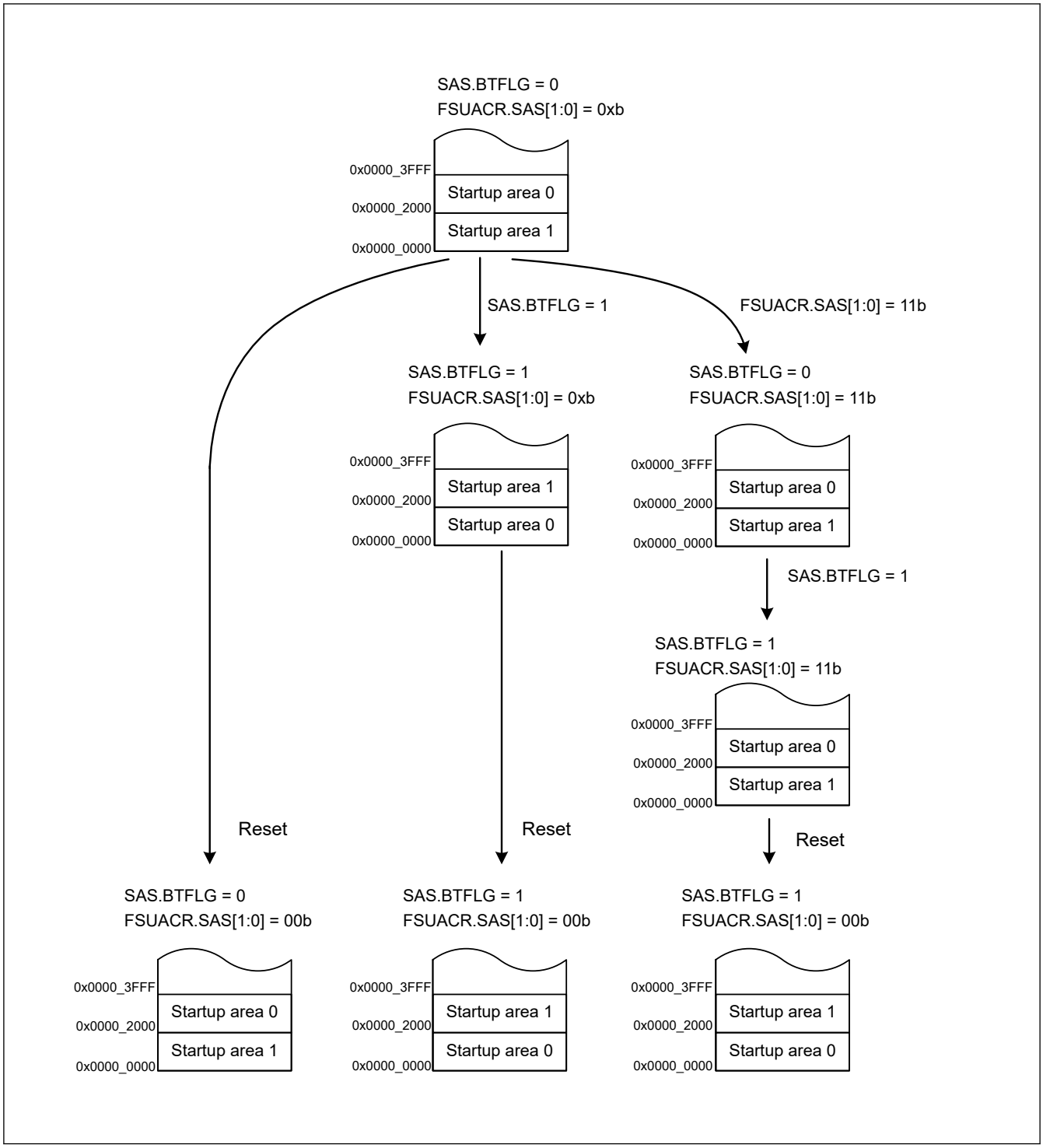

Figure 39.23 Example 2 of transitions for startup program protection settings

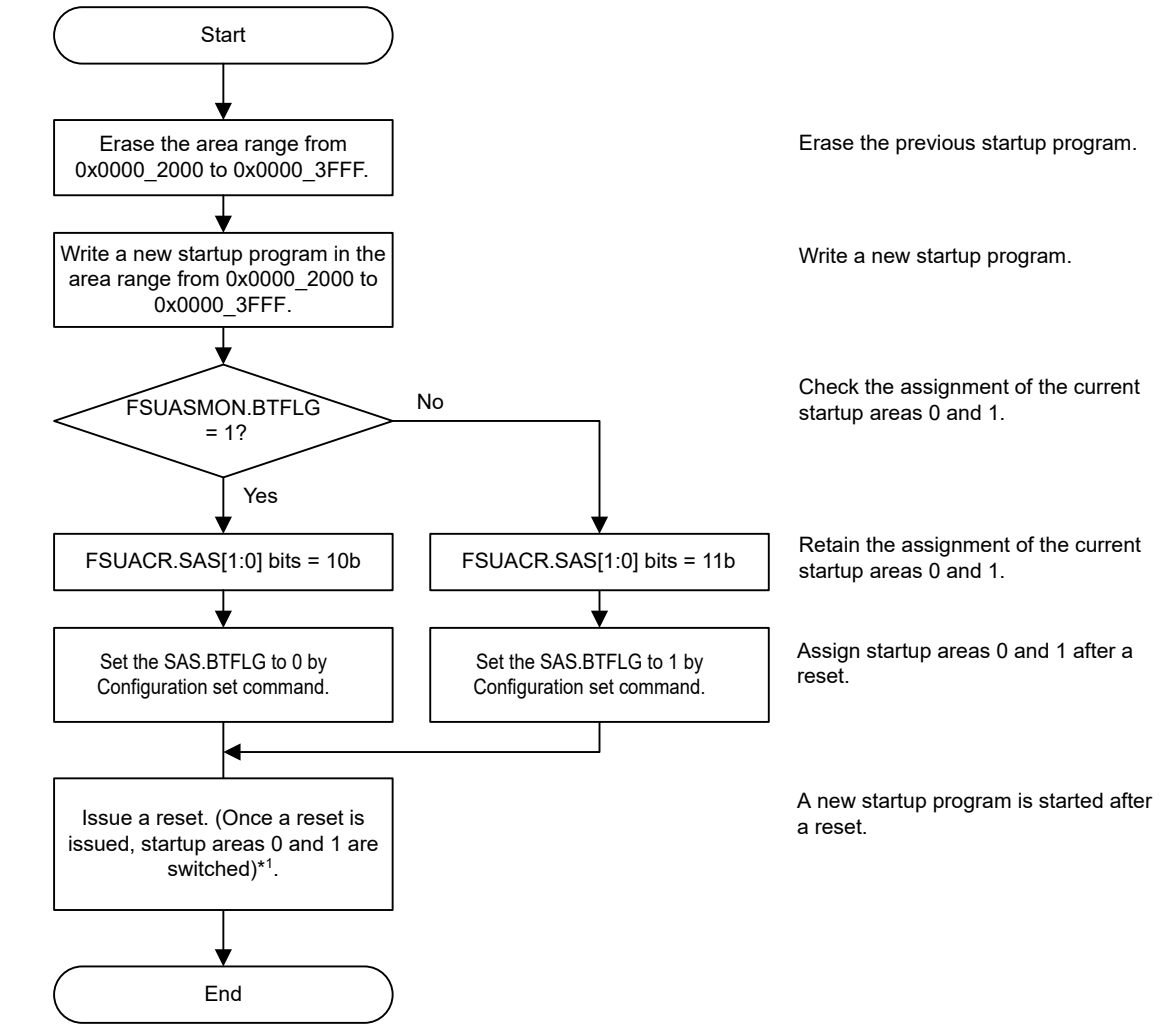

Note 1. For details, see Figure 39.22 and Figure 39.23.

Figure 39.24 Concept of protection of the startup program

39.11.4 Dual Bank Function

This protection uses the functions of bank mode switching and startup bank selection to update a program while a user program is running and to provide a safe method of updating in cases where programming is suspended during a reset.

39.11.4.1 Switching Bank Modes

The bank mode switching function selects either linear mode in which the user area in the code flash memory is used as one area, or dual mode in which the user area is divided into two bank areas. Figure 39.25 shows an example of flow of switching bank modes. A reset after setting the DUALSEL.BANKMD[2:0] bits in the option setting memory determines the mode of the bank mode switching function. Selecting dual mode enables the startup bank selection function.

When dual mode is selected by bank mode switching function (the DUALSEL.BANKMD[2:0] bits are 000b), startup program protection function cannot be used.

For details of DUALSEL.BANKMD[2:0] bits, see section 6, Option-Setting Memory.

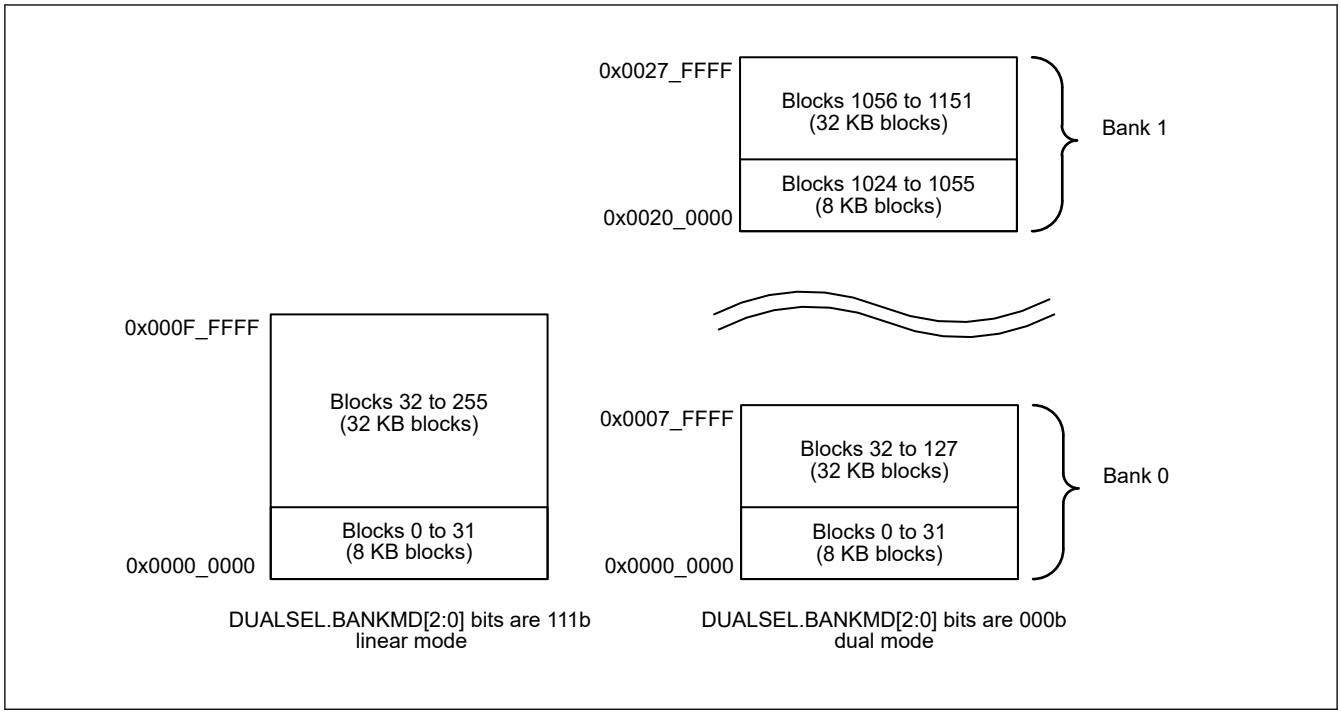

Figure 39.25 Example of flow for switching bank modes (for products with 1 MB of code flash memory)

39.11.4.2 Selecting the Startup Bank

Startup bank selection provides a way to safely update the program by selecting a bank area to be started in dual mode (when the DUALSEL.BANKMD[2:0] bits are 000b) when programming is suspended during a reset. Figure 39.26 is a schematic view of startup bank selection and Table 39.23 shows an example of the flow of startup bank selection. A reset after setting the value of the BANKSEL.BANKSWP[2:0] bits in the option-setting memory changes the addresses of banks 0 and 1 and booting up a program proceeds from the updated area. When the address is switched by using startup bank selection, the programming/erasure target for the FACI commands is also switched. This function is invalid in linear mode.

For details of DUALSEL.BANKMD[2:0] bits and BANKSEL.BANKSWP[2:0] bits, see section 6, Option-Setting Memory.

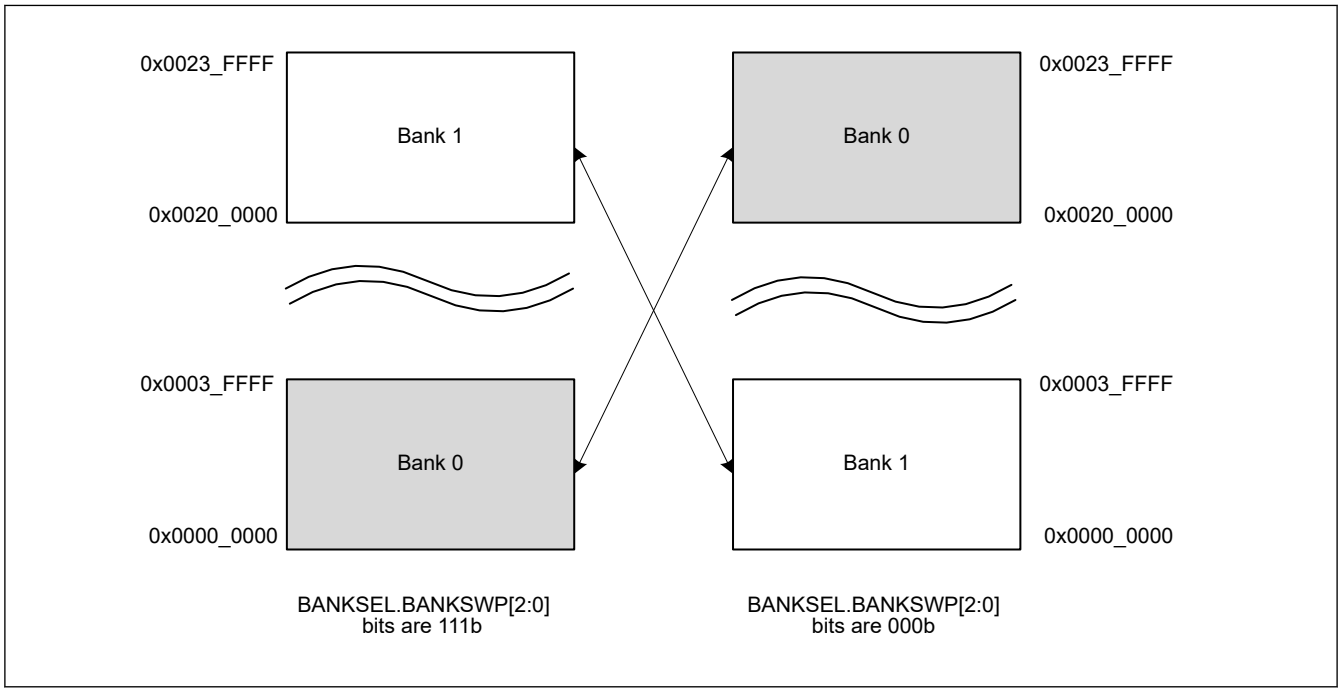

Figure 39.26 Example of startup bank selection (for products with 512 KB of code flash memory)

Table 39.23 Example of startup bank selection flow (for products with 512 KB of code flash memory)

No.	Step Name	Description
1	Erase block	Erase blocks to be programed in the address range from 0x0020_0000 to 0x0023_FFFF
2	Program a new software	Program a new software in the address range from 0x0020_0000 to 0x0023_FFFF
3	Read the value	Read the value of the BANKSEL.BANKSWP[2:0] bits.
4	Write an inverted value	Write an inverted value in the BANKSEL.BANKSWP[2:0] bits*1.
5	Issue a reset	Issue a reset (a reset switches the banks)

Note 1. Set the inverse of the read value of the BANKSEL.BANKSWP[2:0] bits (000b or 111b).

39.11.5 Block Swap Function

This protection uses the functions of block swap selection to update a program while a user program is running and to provide a safe method of updating in cases where programming is suspended during a reset.

39.11.5.1 Selecting the Block Swap

Block swap selection provides a way to safely update the program when programming is suspended during a reset. Figure 39.27 is a schematic view of block swap selection and Figure 39.28 shows an example of the flow of block swap selection. A reset after setting the value of the BANKSEL.BLCKSWP bit in the option-setting memory changes the addresses of block A and B. When the address is switched, the programming/erasure target for the FACI commands is also switched.

In addition, this protection cannot be used when dual mode is selected by the bank mode switching function (when the DUALSEL.BANKMD[2:0] bits are 000b).

For details of DUALSEL.BANKMD[2:0] bits and BANKSEL.BLCKSWP bit, see section 6, Option-Setting Memory.

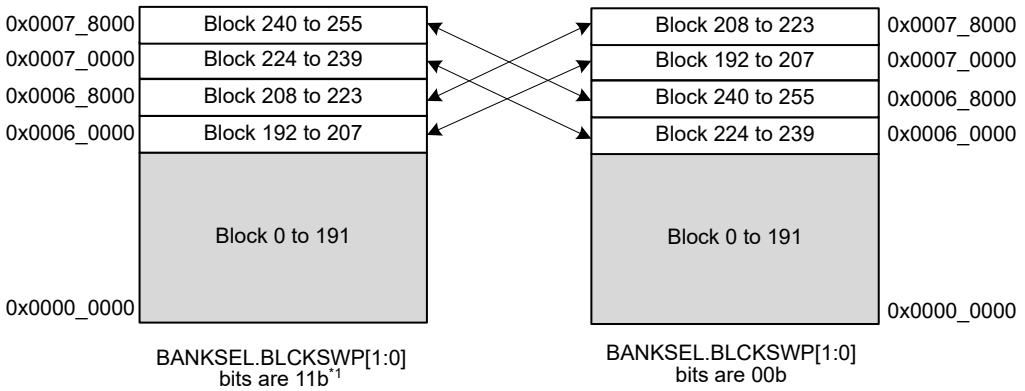

Note 1. For products without setting of the option-setting memory, the BANKSEL.BLCKSWP[3:0] bits are 1111b

Figure 39.27 Example of block swap selection (for products with 512 KB of code flash memory)

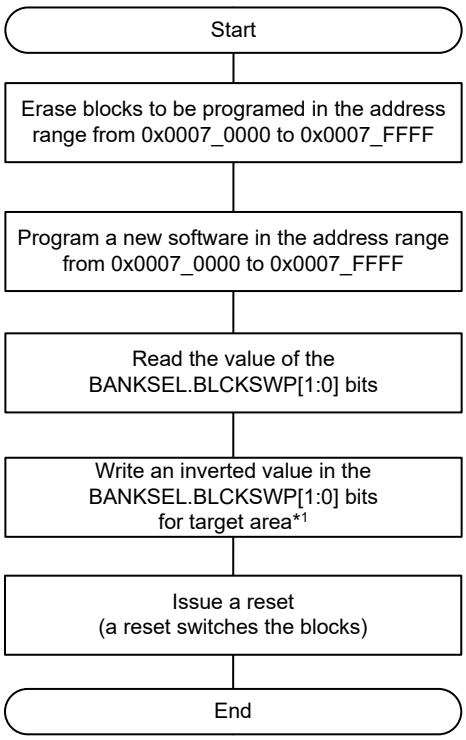

Note 1. When target area is Blocks 192 to 207 and 224 to 239, BANKSEL.BLKSWP[0] bit sets the inverse of the read value.
When target area is Blocks 208 to 223 and 240 to 255, BANKSEL.BLKSWP[1] bit sets the inverse of the read value.

Figure 39.28 Example of block swap selection flow (for products with 512 KB of code flash memory)

39.12 Security Function

The flash sequencer supports the following security functions:

- Security flag for startup area
- Permanent block protect setting
- Flash memory protection for TrustZone

39.12.1 Security Flag for Startup Area Select

The security flag (SAS.FSPR) for the startup area is located in the option-setting memory.

When the SAS.FSPR bit is 0, issuing the configuration set command to change the SAS.BTFLG bit, the Chip Erase command causes the flash sequencer to be in the command-locked state. Also, when the SAS.FSPR bit is 0, it is invalid to write to the Startup Area Select bits SAS[1:0] in the FSUACR register. The SAS.FSPR bit enables protection.

39.12.2 Permanent Block Protect Setting

The permanent block protect setting is the clear protection for the block protection setting. User area cannot be permanently updated by the FACI command when the permanent block protect setting is enabled. See section 39.11.1.2. Protection by Block Protect Setting for more details.

The block protect setting and the permanent block protect setting have the write/clear protection against the configuration set command. The flash sequencer does not detect an error when the configuration set command is issued to the write/clear protected settings.

Figure 39.29 and Table 39.24 show the write/clear protection against the block protect setting (BPS[n]) and the permanent protect setting (PBPS[n]). Figure 39.30 and Table 39.25 show the write/clear protection against the block protect setting for secure (BPS_SEC[n]) and permanent protect setting for secure (PBPS_SEC[n]).

Effective permanent block protect setting (PBPS or PBPS_SEC) depends on block protect select (BPS_SEL). For details of permanent block protect setting (PBPS or PBPS_SEC) and block protect select (BPS_SEL), see section 6, Option-Setting Memory.

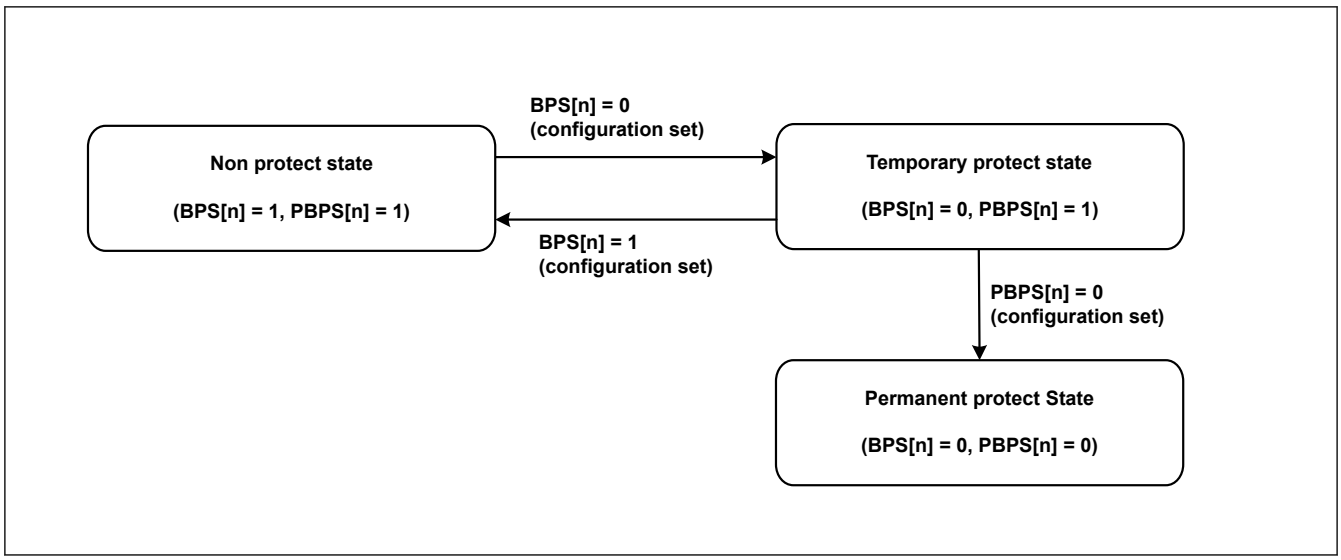

Figure 39.29 Status transition of flash sequencer by BPS[n] and PBPS[n]

Table 39.24 Write/clear protection of BPS[n] and PBPS[n]

Current state		Updatable state by configuration set command			
BPS[n]	PBPS[n]	BPS[n] = 1	BPS[n] = 0	PBPS[n] = 1	PBPS[n] = 0
1	1	✓	✓	✓	X
1	0	—	—	—	—
0	1	✓	✓	✓	✓
0	0	X	✓	X	✓

Note:
- ✓ indicates updatable by configuration set command.
- X indicates not updatable by configuration set command (error does not occur).
- — indicates not reaching to this state.

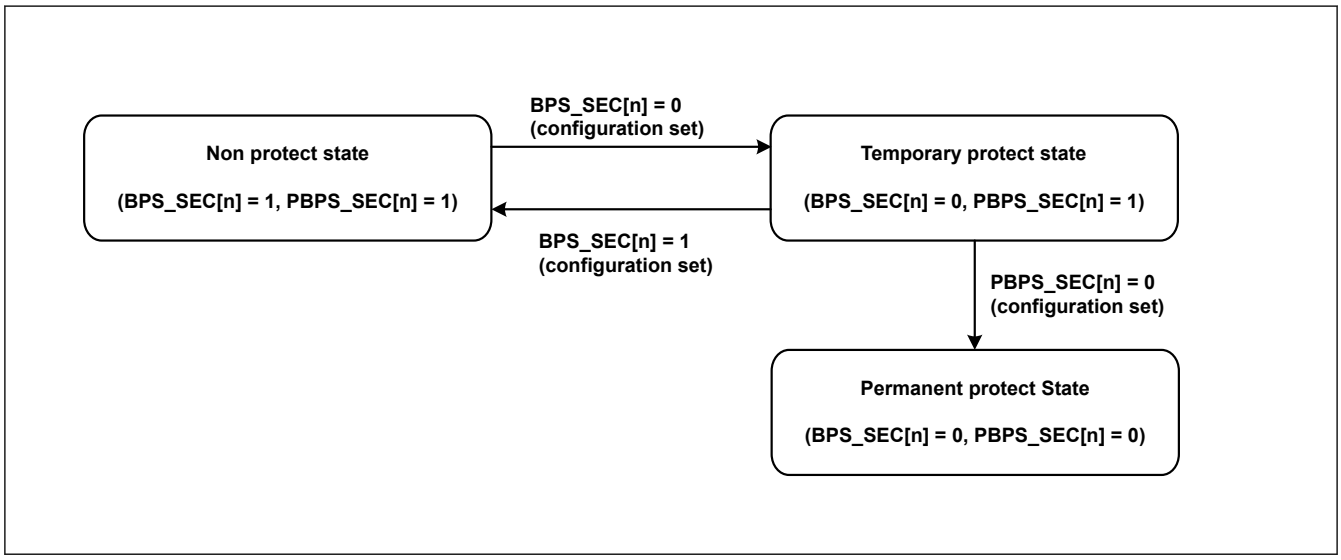

Figure 39.30 Status transition of flash sequencer by BPS_SEC[n] and PBPS_SEC[n]

Table 39.25 Write/clear protection of BPS_SEC[n] and PBPS_SEC[n]

Current state		Updatable state by configuration set command			
BPS_SEC[n]	PBPS_SEC[n]	BPS_SEC[n] = 1	BPS_SEC[n] = 0	PBPS_SEC[n] = 1	PBPS_SEC[n] = 0
1	1	✓	✓	✓	X
1	0	—	—	—	—
0	1	✓	✓	✓	✓
0	0	X	✓	X	✓

Note:
- ✓ indicates updatable by configuration set command.
- X indicates not updatable by configuration set command (error does not occur).
- — indicates not reaching to this state.

39.12.3 Flash Memory Protection for TrustZone

Information in this section focuses on the flash sequencer operation.

The flash memory provides the following types of protect function against non-secure access:

- Protection for flash memory area (P/E)
- Protection for flash memory area (read)
- Protection for registers
- Code flash P/E mode entry protection

39.12.3.1 Protection for Flash Memory Area (P/E)

This function protects the secure region of the code flash and data flash from FACI commands of non-secure access (except for Chip Erase command). The condition of protection depends on the FACI command, the access attribution, and the memory boundary setting.

For details of secure region, see section 42, Security Features .

See Table 39.26 for information on protection of the flash memory area (P/E).

Table 39.26 Protection for the flash memory area (P/E)

FACI command	Target area		Issuing of FACI command by non-secure access	Issuing of FACI command by secure access
Program Block Erase Blank Check	Code flash memory	User area (non-secure area)	✓	✓
		User area (secure area)	X	✓
	Data flash memory	Data area (non-secure area)	✓	✓
		Data area (secure area)	X	✓
Configuration Set	Code flash memory	option-setting memory (non-secure area)	✓	✓
		option-setting memory (secure area)	X	✓

Note:
- ✓ indicates FACI command operation is not prohibited.
- X indicates FACI command operation is prohibited. Error occurs when the area is selected, and the FACI command is executed.

When the target area of FACI command is the user area of code flash, the flash sequencer compares the FSADDR register setting with the memory boundary setting of the code flash and determines whether the target area is in the secure region.

In linear mode, the memory boundary can be set to 0x0000_0000 to 0x00FF_8000 in 32 KB unit.

In dual mode, the memory boundary can be set to 0x0000_0000 to 0x0020_0000 in 32 KB unit. When the memory boundary is set to 0x0020_0000 or greater in the dual mode, the entire user area is defined as the secure region.

Figure 39.31 shows details of the non-secure/secure attribute of user area in the code flash.

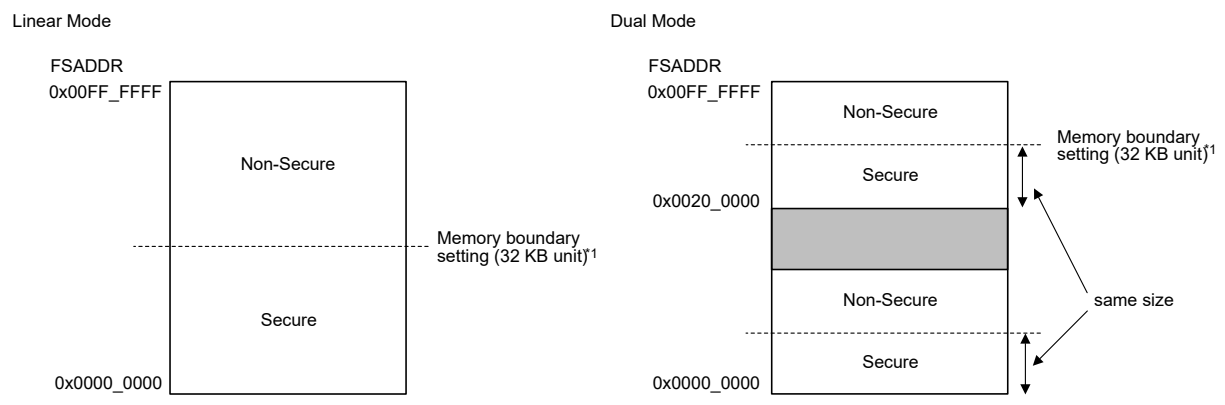

Note 1. Comparing FSADDR with memory boundary setting of user area and judges whether the target area is in secure area.

Figure 39.31 Secure/non-secure region in user area

When the target area of the issuing FACI command is the data area of data flash, the flash sequencer compares the FSADDR/FEADDR register setting with the memory boundary setting of the data flash and determines whether the target area is in secure region. The memory boundary can be set to 0x0800_0000 to 0x0800_FC00 in 1 KB unit. Figure 39.32 shows details of the non-secure/secure attribute of data area in the data flash.

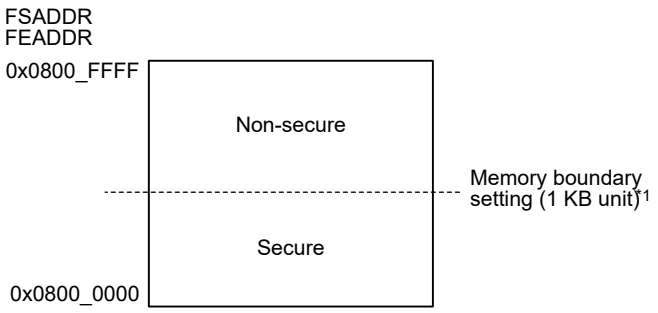

Note 1. Compares FSADDR/FEADDR with memory boundary setting of data area and determines whether the target area is in secure area.

Figure 39.32 Secure/non-secure region in data area

See Figure 39.33 for details of non-secure/secure region of option-setting memory. The flash sequencer determines that target area is secure region from the FSADDR register setting.

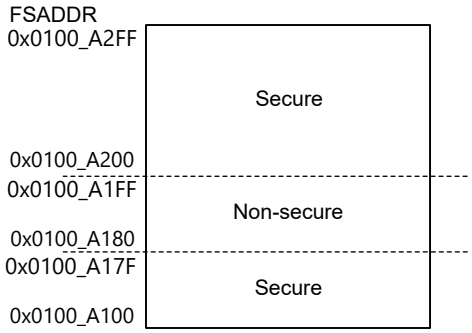

Figure 39.33 Secure/non-secure region in option-setting memory

39.12.3.2 Protection for Flash Memory Area (Read)

This function protects the secure region of code flash and data flash from non-secure bus access.

For details of secure region, see section 42, Security Features .

39.12.3.3 Protection for Register

The flash sequencer registers have write-access protection against non-secure access. Table 39.27 shows details of the protected registers of the flash sequencer.

Table 39.27 Protected registers of the flash sequencer for TrustZone

Protection target register	Security attribute setting	Notes
FSAR	Always secure	See section 39.4.3. FSAR : Flash Security Attribution Register
DFLCTL	SA register setting (FSAR.DFLCTLSA)	See section 39.4.1. DFLCTL : Data Flash Control Register
MEMWAIT	SA register setting (FSAR.FLWTSA)	See section 8.2.4. MEMWAIT : Memory Wait Cycle Control Register for Code Flash
FLDWAITR	SA register setting (FSAR.FCKMHZSA)	See FLDWAITR : Data Flash Wait Cycle Setting Register
PFBER	SA register setting (FSAR.PFBERSA)	See section 39.4.2. PFBER : Prefetch Buffer Enable Register
FACI registers except the following: ● Read-only register ● FMEPROT register ● FBPROT1 register ● FSUACR register	SA register setting (FSAR.FACICOMRSA)	See section 39.4.3. FSAR : Flash Security Attribution Register
FMEPROT	Always secure	See section 39.4.12. FMEPROT : Flash P/E Mode Entry Protection Register
FBPROT1	Always secure	See section 39.4.14. FBPROT1 : Flash Block Protection for Secure Register
FSUACR	Always secure	See section 39.4.24. FSUACR : Flash Startup Area Control Register
FACI command-issuing area	SA register setting (FSAR.FACICOMISA)	See section 39.9.1. List of FACI Commands

39.12.3.4 Code Flash P/E Mode Entry Protection

The flash sequencer has protection function of code flash P/E by the FMEPROT register for the secure developer. Secure function can prevent disturbance of reading code flash memory by this protection function. See section 39.4.12. FMEPROT : Flash P/E Mode Entry Protection Register.

For applications that do not require non-secure region programming/erasure other than from secure function, it is recommended to always disable non-secure function of code flash programming/erasure by enabling the protection function of FMEPROT register.

For the code flash P/E sequence example by non-secure function, see Figure 39.34.

When the protection of FMEPROT register is enabled, the secure function can set interrupt vector to the code flash, and the non-secure function should call the code flash P/E request. See Figure 39.35 for details of the code flash P/E sequence example by non-secure function.

When the protection of FMEPROT register is disabled, the secure function cannot set interrupt vector to the code flash. See Figure 39.36 for details of the code flash P/E sequence example by the non-secure function.

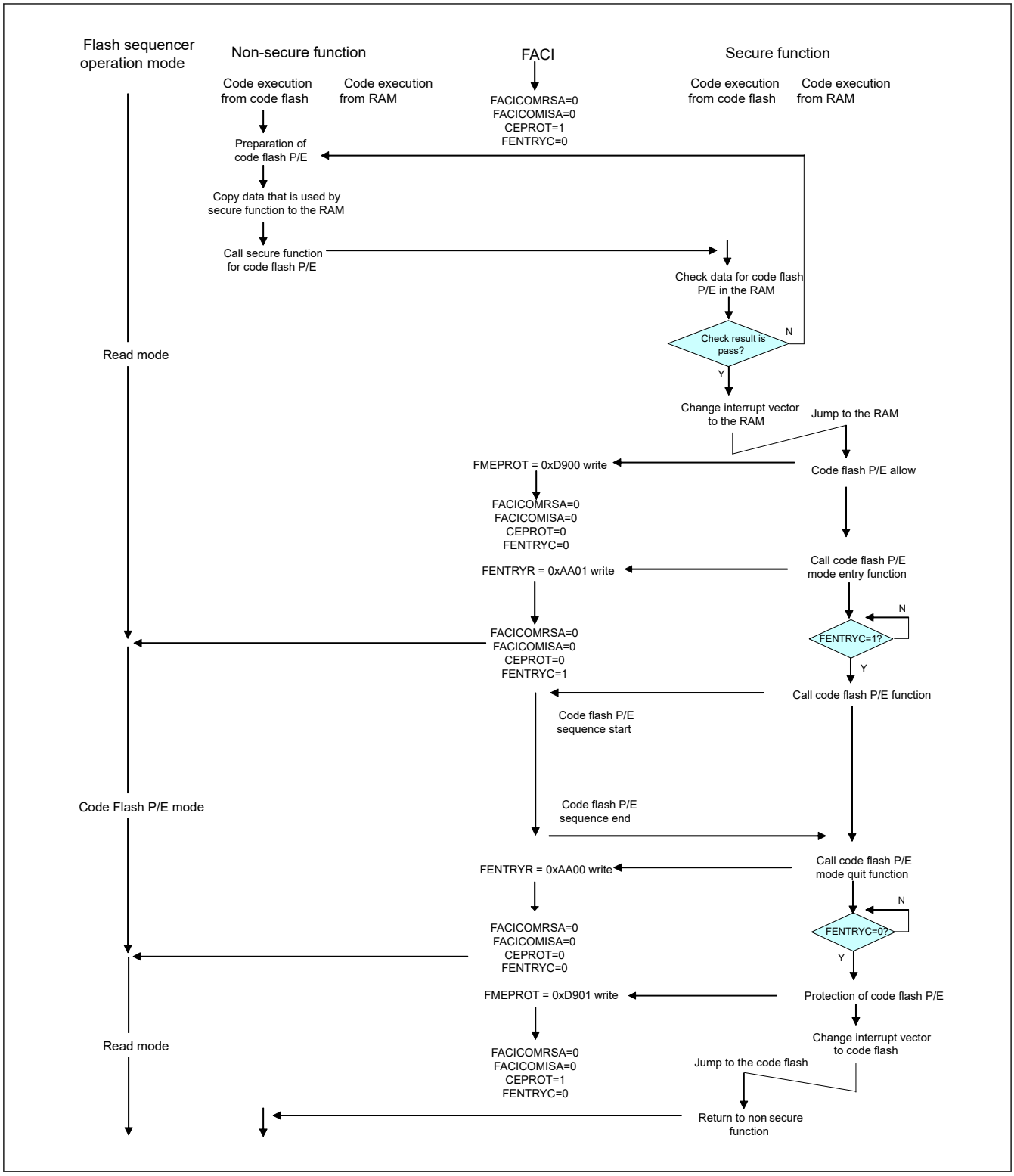

Figure 39.34 Code flash P/E sequence example by non-secure function (using secure function for code flash P/E)

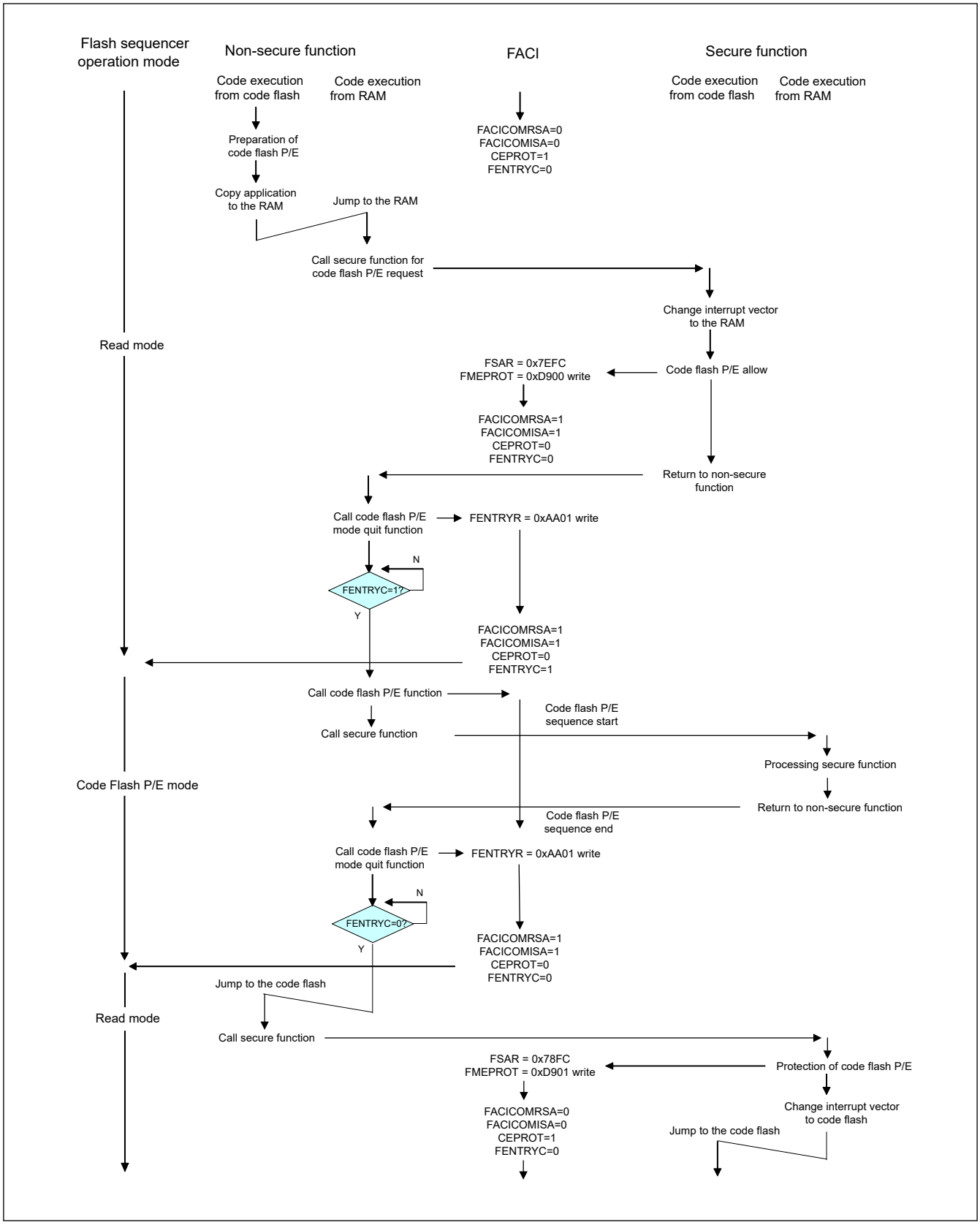

Figure 39.35 Code flash P/E sequence example by non-secure function (1) (using non-secure function for code flash P/E)

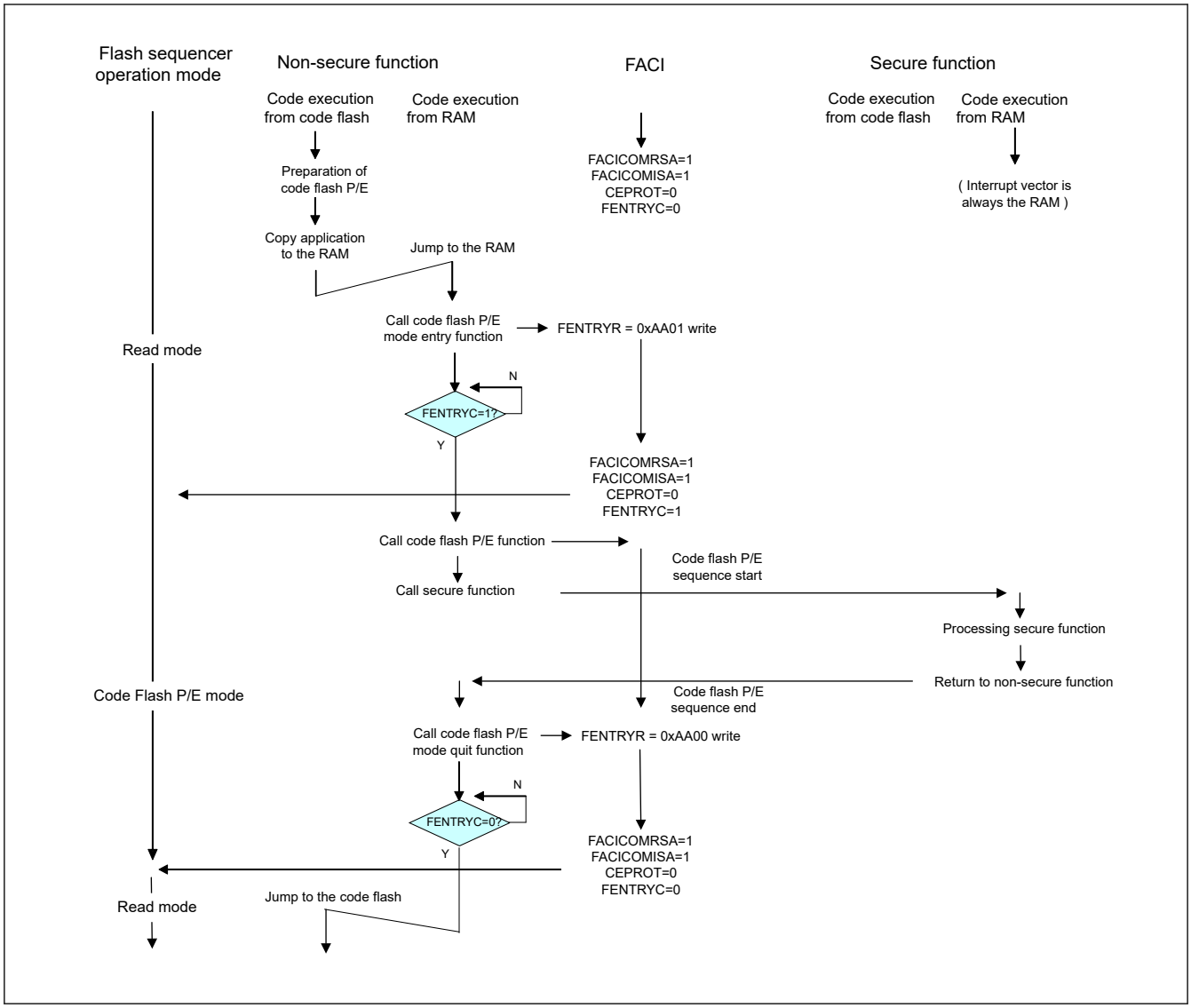

Figure 39.36 Code flash P/E sequence example by non-secure function (2) (using non-secure function for code flash P/E)

39.13 Boot Mode

There are three serial programming modes:

- Boot mode (for the SCI interface) with SCI9
- Boot mode (for the SWD interface) with on-chip SWD

The available interfaces and connection times to the tool vary depending on the clock source connected to the MCU. Table 39.28 lists the I/O pins used in boot mode. Table 39.29 lists the available communication interface and the connection time depending on the clock sources in the boot mode.

Table 39.28 I/O pins used in boot mode (1 of 2)

Pin name	I/O	Mode to be used	Use
MD	Input	Boot mode (for the SCI interface) Boot mode (for the SWD interface)	Selection of operating mode
P110/RXD9	Input	Boot mode (for the SCI interface)	For host communication (to receive data through SCI)
P109/TXD9	Output		For host communication (to transmit data through SCI)

Table 39.28 I/O pins used in boot mode (2 of 2)

Pin name	I/O	Mode to be used	Use
SWCLK	Input	Boot mode (for the SWD interface)	Serial wire clock pin
SWDIO	I/O		Serial wire data I/O pin

Table 39.29 Tool connection time depending on the clock source

Main clock oscillator	Sub-clock oscillator	Available interface	Tool connection time*2
Connected	Don't care	SCI	Up to 1 second
Unconnected	Connected*1	SCI	Up to 2 seconds
Unconnected	Unconnected	SCI	Up to 3 seconds

Note 1. The drive capability of the sub-clock oscillator is set to standard by SOMCR.SODRV bit. Note that if you use the crystal resonator corresponding to the low drive capability on your board, the crystal resonator may not oscillate in the boot mode.

Note 2. Tool connection time means that it takes for communication to be established between MCU and the host. For details, see the boot firmware application note.

39.13.1 Boot Mode (for the SCI Interface)

In boot mode (for the SCI interface), the host sends control commands and data for programming, and the flash memory is programmed or erased accordingly. An on-chip SCI handles transfer between the host and this MCU in asynchronous mode. Tools for transmission of control commands and the data for programming must be prepared in the host.

When this MCU is activated in boot mode (for the SCI interface), the program on the dedicated area the MCU is executed. The boot program automatically adjusts the bit rate of the SCI and controls programming/erasure by receiving control commands from the host.

Figure 39.37 shows the system configuration for operations in boot mode (for the SCI interface).

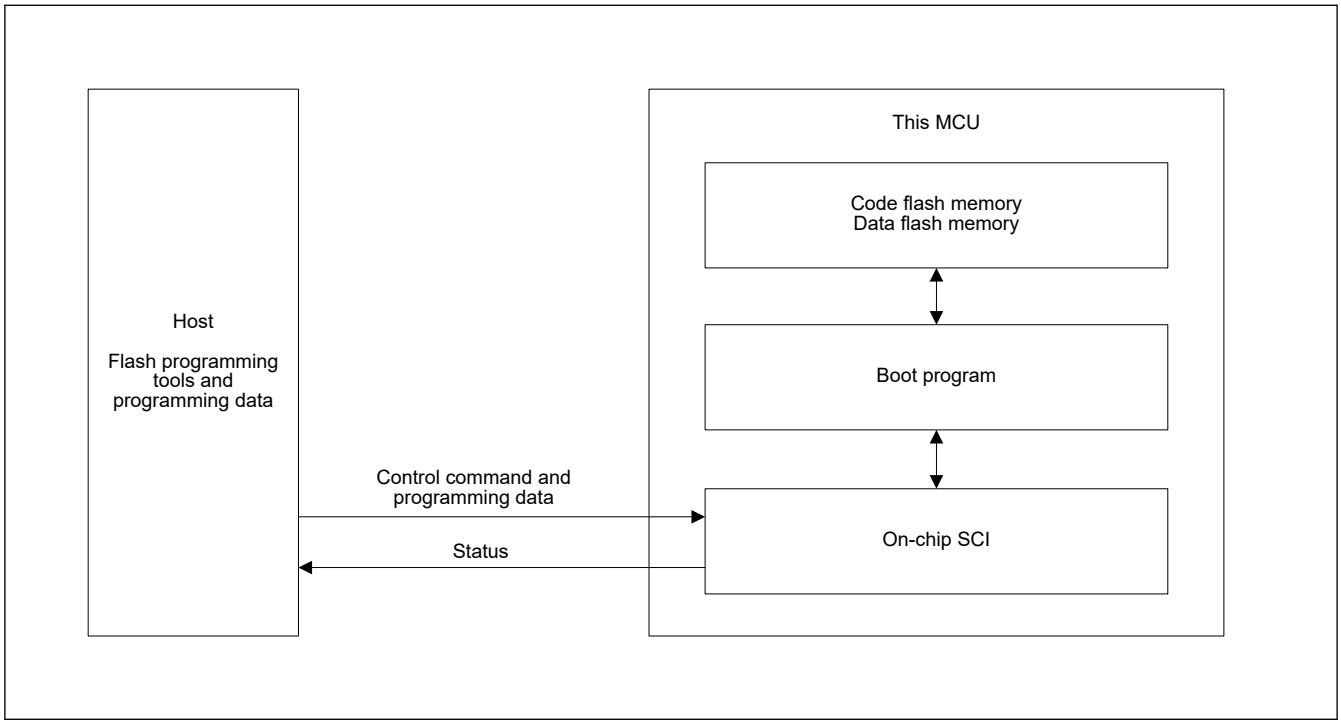

Figure 39.37 System configuration for operations in boot mode (for the SCI interface)

39.13.2 Boot Mode (for the SWD Interface)

In boot mode (with the SWD interface), the flash memory can be programmed or erased by sending control commands and program data from the host. An on-chip SWD is used for communications between the host and this MCU. The host requires tools for sending control commands and data for programming. Figure 39.38 shows the configuration of a system for use in boot mode (with the SWD interface). The SWD interface must be connected on reset release.

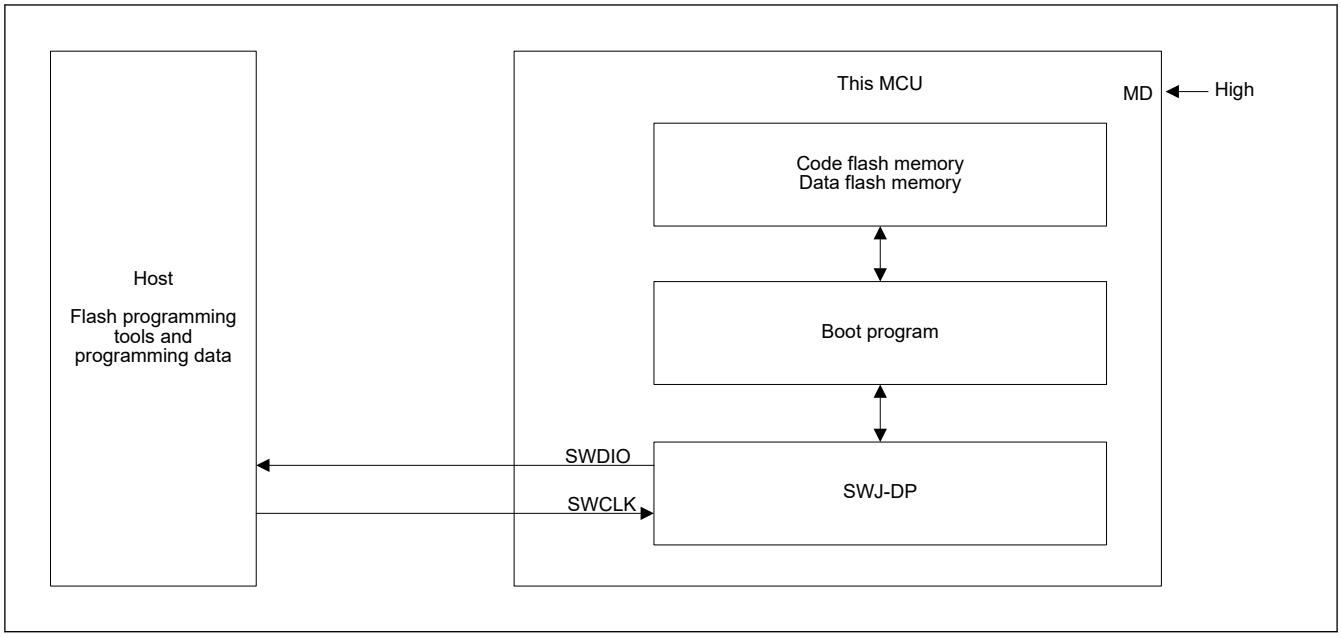

Figure 39.38 Block diagram of flash memory-related modules

39.14 Using the Serial Programmer for Rewriting

A serial programmer can be used to rewrite flash memory in boot mode.

(1) Serial Programming

This MCU is mounted on the system board at the time of serial programming. Providing a connector to the board enables rewriting of this MCU by the serial programmer to proceed.

39.14.1 Environments for Serial Programming

Figure 39.39 describes the recommended environments for rewriting the flash memory of the MCU with data.

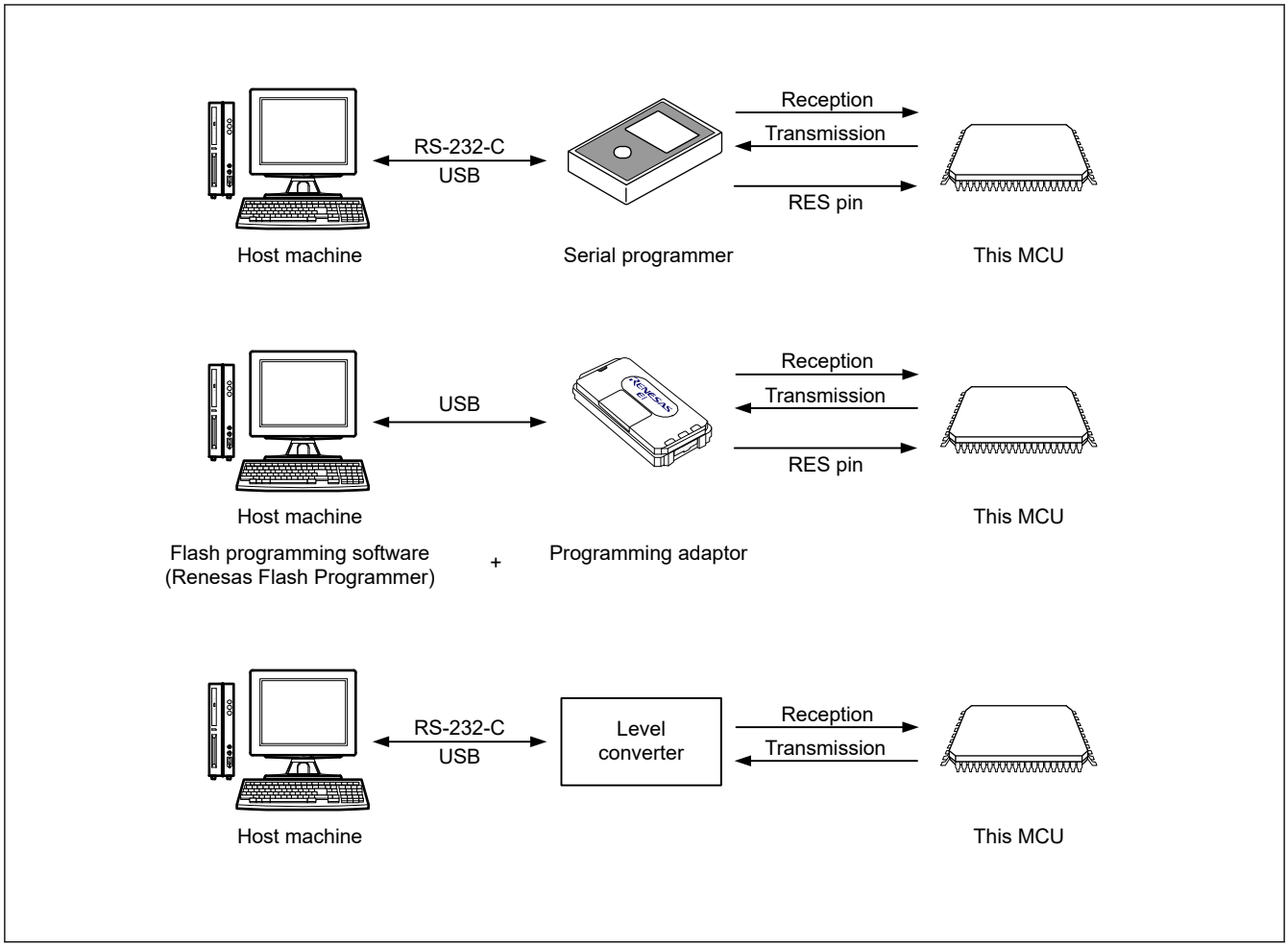

Figure 39.39 Environments for rewriting the flash memory

39.15 Programming through Self-Programming

39.15.1 Overview

This MCU supports programming of the flash memory by the user program itself. The FACI commands can be used with user programs for writing to the flash memory. This allows upgrading of user programs and rewriting of constant data fields.

In self-programming, it is necessary to supply a stable HOCO clock to the flash memory in order to generate the program voltage and erase voltage. Therefore, in case that the HOCO is stopped where another clock source is selected as the system clock, it is necessary to start the HOCO operation and ensure that the oscillation is in a stable state before executing the self programming.

The program for rewriting must be transferred to the internal RAM or external memory in advance when the BGO is not available or when rewriting the option-setting memory.

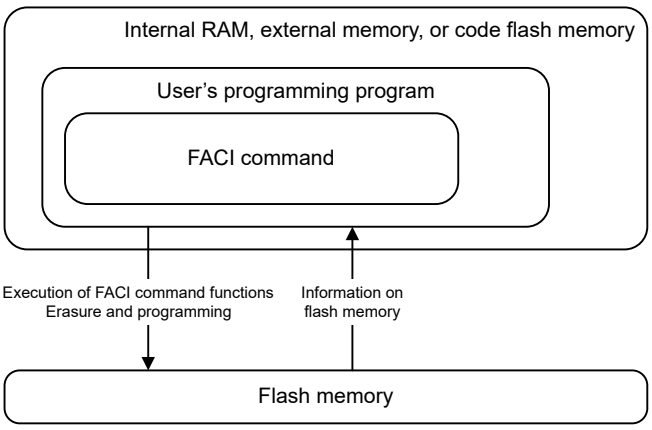

Figure 39.40 Schematic View of Self-Programming

For comprehensive information on the self-programming, see section 39.9. FACI Commands.

39.15.2 Background Operation

The background operation (BGO) can be used to execute the flash rewrite routine on the code flash memory when the data flash memory or other area of code flash memory is rewritten.

Background operations can be used when the combination of the flash memory for rewriting and the flash memory for reading is any of those listed in Table 39.30.

Table 39.30 Conditions under which background operation is usable

		Range for rewriting	Range for reading
Common to linear and dual modes		Code flash memory	Data flash memory
		Data flash memory	Code flash memory
Linear mode	Products with 512 KB of code flash memory	First half (256 KB) of the code flash memory (addresses 0x0000_0000 to 0x0003_FFFF)	Second half (256 KB) of the code flash memory (addresses 0x0004_0000 to 0x0007_FFFF)
		Second half (256 KB) of the code flash memory (addresses 0x0004_0000 to 0x0007_FFFF)	First half (256 KB) of the code flash memory (addresses 0x0000_0000 to 0x0003_FFFF)
Linear mode	Products with 256 KB of code flash memory	First half (128 KB) of the code flash memory (addresses 0x0000_0000 to 0x0001_FFFF)	Second half (128 KB) of the code flash memory (addresses 0x0002_0000 to 0x0003_FFFF)
		Second half (128 KB) of the code flash memory (addresses 0x0002_0000 to 0x0003_FFFF)	First half (128 KB) of the code flash memory (addresses 0x0000_0000 to 0x0001_FFFF)
Dual mode	When the BANKSEL.BANKSWP[2:0] bits are 111b	Bank 1 area of the code flash memory	Bank 0 area of the code flash memory
	When the BANKSEL.BANKSWP[2:0] bits are 000b	Bank 0 area of the code flash memory	Bank 1 area of the code flash memory

39.16 Reading Flash Memory

39.16.1 Reading Code Flash Memory

Special settings are not required to read code flash memory after release from the reset state. Data can simply be read out through access to addresses in the code flash memory.

When reading code flash memory that has been erased but not yet been programming again (i.e. that is in the non-programmed state), all bits are read as 1.

39.16.2 Reading Data Flash Memory

Special settings are not required to read data flash memory in normal mode except when issuing a reset that causes the data flash access disable mode to disable reading. In this case, the application must transfer back to the data flash read mode. Data can simply be read out through access to addresses in the data flash memory.

When reading data flash memory that has been erased but not yet been programming again (that is, in the non-programmed state), all bits are read as 1.

39.16.3 Access Cycle

When the CPU cache is hit, access is one cycle.

When the CPU cache is missed while CPU cache operation is enabled, or when CPU cache is disabled, the access cycle is as described in Table 39.31, Table 39.32 and Table 39.33.

Table 39.31 Code flash memory (CPU access)

Prefetch operation	Frequency (MHz)	Read cycle (ICLK)
Enable and hit	ICLK ≤ 32	3 ICLK
	32 < ICLK ≤ 48	3 ICLK
	48 < ICLK ≤ 80	3 ICLK
Disable or miss	ICLK ≤ 32	3 ICLK
	32 < ICLK ≤ 48	4 ICLK
	48 < ICLK ≤ 80	Min: 5 ICLK Max: 6 ICLK

Table 39.32 Code flash memory (DMAC or DTC access)

Prefetch operation	Frequency (MHz)	Read cycle (ICLK)
Enable and hit	ICLK ≤ 32	1 ICLK
	32 < ICLK ≤ 48	1 ICLK
	48 < ICLK ≤ 80	1 ICLK
Disable or miss	ICLK ≤ 32	1 ICLK
	32 < ICLK ≤ 48	2 ICLK
	48 < ICLK ≤ 80	Min: 3 ICLK Max: 4 ICLK

Table 39.33 Data flash memory

Frequency (MHz)	Read cycle (ICLK)
ICLK ≤ 32	7 ICLK
32 < ICLK ≤ 48	8 ICLK
48 < ICLK ≤ 80	Min: 14 ICLK Max: 15 ICLK

Note: When the read data size is 1 byte.

39.17 Usage Notes

(1) Forced Stop Area of Erasure

Data in areas where a forced stop of an erase operation was performed is undefined. To avoid malfunctions caused by reading undefined data, do not execute commands or read data in the area where a forced stop of an erase operation is performed..

(2) Erase Suspension by Forced Stop Command

When suspending an operation other than blank check by the Forced Stop command, Resume command is not supported.

(3) Additional Programming Disabled

The same address cannot be programmed more than once. When programming an area that has been already programmed, erase the area first.

(4) Resets During Programming/Erasure

In the case of a reset due to the signal on the RES pin during programming/erasure, or blank checking of the flash memory, wait for at least t_{RESW} (see section 43, Electrical Characteristics) of the reset input period once the operating voltage is within the range stipulated in the electrical characteristics, then release the device from the reset state.

(5) Location of Interrupt Vectors During Programming/Erasure Operation

When an interrupt occurs during a programming/erasure operation, the vector may be fetched from the code flash. To avoid fetching the vector from the code flash, set the destination for fetching interrupt vectors to an area other than the code flash with the interrupt table.

(6) Programming/Erasure in Low-Speed Operating Mode

Do not program or erase the flash memory when low-speed operating mode is selected with the Operating Power Control Register (OPCCR or SOPCCR) selected.

(7) Abnormal Termination during Programming/Erasure

When the voltage exceeds the range of the operating voltage during a program/erase operation or when a program/erase operation is not completed successfully due to a reset or prohibited actions described in (8), erase the area again.

(8) Actions Prohibited during Programming/Erasure

To prevent damage to the flash memory, do not perform the following operations:

- Having the operating voltage from the power supply go beyond the permitted range
- Changing the OPCCR.OPCM[2:0] and SOPCCR.SOPCM bits
- Changing the division ratio of the flash interface clock (FCLK)
- Placing the MCU in Software Standby mode
- Changing the data flash access control setting during a program or erase operation to the data flash memory.

(9) Setting Dual Bank Mode and Programming in Boot Mode

The initial mode of the MCU shipped from Renesas is linear mode. In customer’s factory when programming dual bank mode and customer's applications on MCU set in linear mode, it is recommended that only area1 in Figure 39.41 is programmed in boot mode and area2 is kept blank. After reset, the MCU starts in dual mode and the application is in bank0. Use self-programming when programming area2 for updating in the field. See section 42.6. Field Updating in Dual Mode for details.

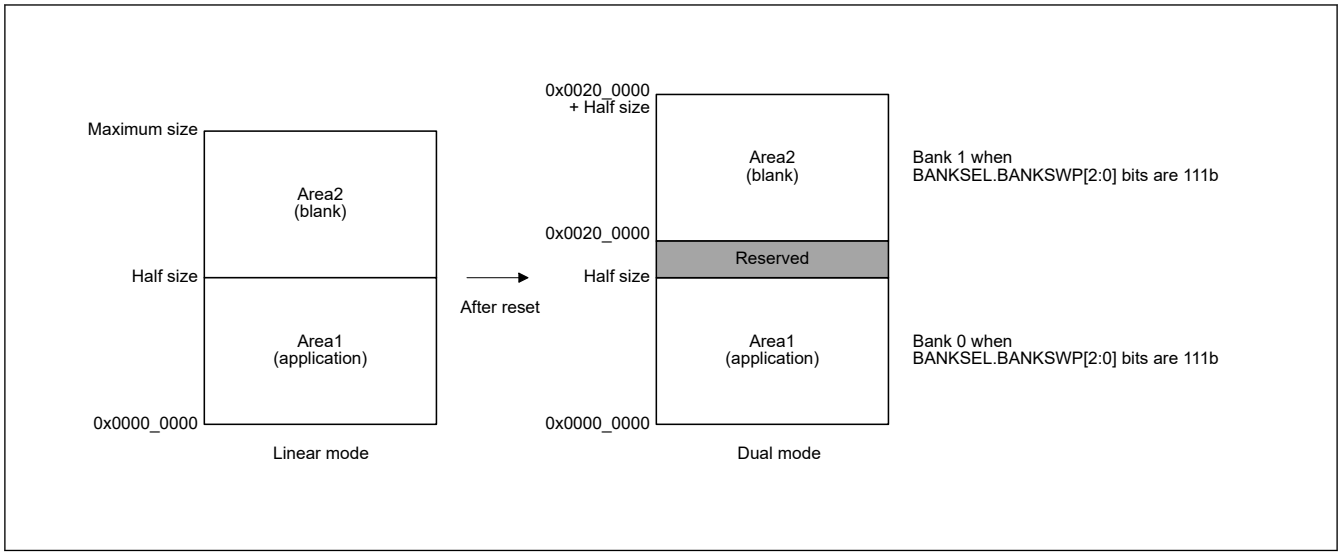

Figure 39.41 Programming the application for the dual mode in the linear mode

40. Segment LCD Controller (SLCDC)

40.1 Overview

The MCU provides a controller for LCD display and display pins. Table 40.1 lists the SLCDC specifications.

Table 40.1 SLCDC specifications

Items	Specifications
Features	• Liquid crystal waveform (waveform A or B) selectable • LCD driver voltage generator can switch between internal voltage boosting method, capacitor split method, and external resistance division method • Automatic output of segment and shared signals based on automatic display data register read • Voltage boost circuit reference voltage selectable from 23 steps (contrast adjustment) • LCD blinking and display selectable • VL1 reference mode (1/3 or 1/4 Bias) and VL2 reference mode (1/3 Bias) can be selected at internal voltage boosting method • Conventional VCC reference mode (1/3 Bias) and VL4 reference mode (1/3 Bias) can be selected at capacitor split method
Number of pins	For details on the number of pins, see Table 40.2 SLCDC display function pins for 100-pin products
Source clocks	• Main clock oscillator (MOSC) • Sub-clock oscillator (SOSC) • Low-speed on-chip oscillator (LOCO) • High-speed on-chip oscillator (HOCO)
Module-stop state function	Module-stop state can be set to reduce power consumption
TrustZone Filter	Security attribution can be set

The number of LCD display function pins for the MCU differs depending on the product. Table 40.2 and Table 40.3 show the display function pins for products with different pin counts. Table 40.4 and Table 40.5 show the maximum number of pixels for products with different pin counts. Figure 40.1 shows the SLCDC block diagram.

Table 40.2 SLCDC display function pins for 100-pin products

LCD controller/ driver	Number of segment pins (SEG): 48 (44)*1 Number of common pins (COM): 8															
Multiplexed I/O port	**b15**	**b14**	**b13**	**b12**	**b11**	**b10**	**b9**	**b8**	**b7**	**b6**	**b5**	**b4**	**b3**	**b2**	**b1**	**b0**
PORT 0	—	—	—	—	—	—	—	—	—	—	—	—	—	—	—	—
PORT 1	SEG27	SEG26	SEG25	SEG3/COM7	SEG2/COM6	SEG1/COM5	SEG0/COM4	SEG24	SEG34	SEG35	SEG36	SEG37	SEG38	SEG39	SEG40	SEG41
PORT 2	—	—	—	—	SEG15	SEG16	SEG17	COM1	—	—	COM0	SEG14	—	—	—	—
PORT 3	—	—	—	—	—	—	—	—	SEG18	SEG19	SEG20	COM2	COM3	SEG21	SEG22	SEG23
PORT 4	SEG9	SEG10	SEG11	SEG12	VL1*3	VL2*3	VL4*3	VL3*3	SEG13	—	SEG24	SEG23	SEG7	SEG6	SEG5	SEG4
PORT 5	—	—	—	—	—	—	—	—	—	—	SEG47	SEG46	SEG45	SEG44	SEG43	SEG42
PORT 6	—	—	—	—	—	SEG30	SEG29	SEG28	—	—	—	—	—	SEG31	SEG32	SEG33
PORT 7	—	—	—	—	—	—	—	SEG8	—	—	—	—	—	—	—	—
PORT 8	CAPH*2	CAPL*2	—	—	—	—	—	—	—	—	—	—	—	—	—	—

Note 1. ( ) indicates the number of signal output pins when 8-time slice is selected.
Note 2. CAPH and CAPL are capacitor connection pins for the LCD controller/driver.
Note 3. VL1, VL2, VL3, and VL4 are the power supply pins for driving the LCD.

Table 40.3 SLCDC display function pins for 64-pin LQFP

LCD controller/ driver	Number of segment pins (SEG): 22 (18)*1 Number of common pins (COM): 8															
Multiplexed I/O port	**b15**	**b14**	**b13**	**b12**	**b11**	**b10**	**b9**	**b8**	**b7**	**b6**	**b5**	**b4**	**b3**	**b2**	**b1**	**b0**
PORT 0	—	—	—	—	—	—	—	—	—	—	—	—	—	—	—	—
PORT 1	—	—	SEG25	SEG3/COM7	SEG2/COM6	SEG1/COM5	SEG0/COM4	SEG24	—	SEG35	SEG36	SEG37	SEG38	SEG39	SEG40	SEG41
PORT 2	—	—	—	—	—	—	—	COM1	—	—	COM0	—	—	—	—	—
PORT 3	—	—	—	—	—	—	—	—	—	—	—	COM2	COM3	SEG21	SEG22	SEG23
PORT 4	—	—	—	—	VL1*3	VL2*3	VL4*3	VL3*3	SEG13	—	—	—	—	—	SEG5	SEG4
PORT 5	—	—	—	—	—	—	—	—	—	—	—	—	—	—	—	SEG42
PORT 6	—	—	—	—	—	—	—	—	—	—	—	—	—	—	—	—
PORT 7	—	—	—	—	—	—	—	—	—	—	—	—	—	—	—	—
PORT 8	CAPH*2	CAPL*2	—	—	—	—	—	—	—	—	—	—	—	—	—	—

Note 1. ( ) indicates the number of signal output pins when 8-time slice is selected.
Note 2. CAPH and CAPL are capacitor connection pins for the LCD controller/driver.
Note 3. VL1, VL2, VL3, and VL4 are the power supply pins for driving the LCD.

Table 40.4 Maximum number of pixels for 100-pin products (1 of 3)

Waveform for LCD driver	LCD driver voltage generator		Bias mode	Number of time slices	Maximum number of pixels
Waveform A	External resistance division		—	Static	48 (48 segment signals, 1 common signals)
			1/2	2	96 (48 segment signals, 2 common signals)
				3	144 (48 segment signals, 3 common signals)
			1/3	3	
				4	192 (48 segment signals, 4 common signals)
				6	276 (46 segment signals, 6 common signals)
				8	352 (44 segment signals, 8 common signals)
			1/4	8	
	Internal voltage boosting	VL1 reference	1/3	3	144 (48 segment signals, 3 common signals)
				4	192 (48 segment signals, 4 common signals)
				6	276 (46 segment signals, 6 common signals)
				8	352 (44 segment signals, 8 common signals)
			1/4	6	276 (46 segment signals, 6 common signals)
				8	352 (44 segment signals, 8 common signals)
		VL2 reference	1/3	3	144 (48 segment signals, 3 common signals)
				4	192 (48 segment signals, 4 common signals)
				6	276 (46 segment signals, 6 common signals)
				8	352 (44 segment signals, 8 common signals)

Table 40.4 Maximum number of pixels for 100-pin products (2 of 3)

Waveform for LCD driver	LCD driver voltage generator		Bias mode	Number of time slices	Maximum number of pixels
Waveform A	Capacitor split	VCC reference	1/3	3	144 (48 segment signals, 3 common signals)
				4	192 (48 segment signals, 4 common signals)
				6	276 (46 segment signals, 6 common signals)
				8	352 (44 segment signals, 8 common signals)
		VL4 reference	1/3	3	144 (48 segment signals, 3 common signals)
				4	192 (48 segment signals, 4 common signals)
				6	276 (46 segment signals, 6 common signals)
				8	352 (44 segment signals, 8 common signals)

Table 40.4 Maximum number of pixels for 100-pin products (3 of 3)

Waveform for LCD driver	LCD driver voltage generator		Bias mode	Number of time slices	Maximum number of pixels
Waveform B	External resistance division		1/3	3	144 (48 segment signals, 3 common signals)
				4	192 (48 segment signals, 4 common signals)
				6	276 (46 segment signals, 6 common signals)
				8	352 (44 segment signals, 8 common signals)
			1/4	8	
	Internal voltage boosting	VL1 reference	1/3	3	144 (48 segment signals, 3 common signals)
				4	192 (48 segment signals, 4 common signals)
				6	276 (46 segment signals, 6 common signals)
				8	352 (44 segment signals, 8 common signals)
			1/4	8	
		VL2 reference	1/3	3	144 (48 segment signals, 3 common signals)
				4	192 (48 segment signals, 4 common signals)
				6	276 (46 segment signals, 6 common signals)
				8	352 (44 segment signals, 8 common signals)
	Capacitor split	VCC reference	1/3	3	144 (48 segment signals, 3 common signals)
				4	192 (48 segment signals, 4 common signals)
				6	276 (46 segment signals, 6 common signals)
				8	352 (44 segment signals, 8 common signals)
		VL4 reference	1/3	3	144 (48 segment signals, 3 common signals)
				4	192 (48 segment signals, 4 common signals)
				6	276 (46 segment signals, 6 common signals)
				8	352 (44 segment signals, 8 common signals)

Table 40.5 Maximum number of pixels for 64-pin LQFP products (1 of 3)

Waveform for LCD driver	LCD driver voltage generator		Bias mode	Number of time slices	Maximum number of pixels
Waveform A	External resistance division		—	Static	20 (20 segment signals, 1 common signal)
			1/2	2	40 (20 segment signals, 2 common signals)
				3	60 (20 segment signals, 3 common signal)
			1/3	3	
				4	80 (20 segment signals, 4 common signal)
				6	108 (18 segment signals, 6 common signal)
				8	128 (16 segment signals, 8 common signal)
			1/4	8	
	Internal voltage boosting	VL1 reference	1/3	3	60 (20 segment signals, 3 common signal)
				4	80 (20 segment signals, 4 common signal)
				6	108 (18 segment signals, 6 common signal)
				8	128 (16 segment signals, 8 common signal)
			1/4	6	108 (18 segment signals, 6 common signal)
				8	128 (16 segment signals, 8 common signal)
		VL2 reference	1/3	3	60 (20 segment signals, 3 common signal)
				4	80 (20 segment signals, 4 common signal)
				6	108 (18 segment signals, 6 common signal)
				8	128 (16 segment signals, 8 common signal)

Table 40.5 Maximum number of pixels for 64-pin LQFP products (2 of 3)

Waveform for LCD driver	LCD driver voltage generator		Bias mode	Number of time slices	Maximum number of pixels
Waveform A	Capacitor split	VCC reference	1/3	3	60 (20 segment signals, 3 common signal)
				4	80 (20 segment signals, 4 common signal)
				6	108 (18 segment signals, 6 common signal)
				8	128 (16 segment signals, 8 common signal)
		VL4 reference	1/3	3	60 (20 segment signals, 3 common signal)
				4	80 (20 segment signals, 4 common signal)
				6	108 (18 segment signals, 6 common signal)
				8	128 (16 segment signals, 8 common signal)

Table 40.5 Maximum number of pixels for 64-pin LQFP products (3 of 3)

Waveform for LCD driver	LCD driver voltage generator		Bias mode	Number of time slices	Maximum number of pixels
Waveform B	External resistance division		1/3	3	60 (20 segment signals, 3 common signal)
				4	80 (20 segment signals, 4 common signal)
				6	108 (18 segment signals, 6 common signal)
				8	128 (16 segment signals, 8 common signal)
			1/4	8	
	Internal voltage boosting	VL1 reference	1/3	3	60 (20 segment signals, 3 common signal)
				4	80 (20 segment signals, 4 common signal)
				6	108 (18 segment signals, 6 common signal)
				8	128 (16 segment signals, 8 common signal)
			1/4	8	
		VL2 reference	1/3	3	60 (20 segment signals, 3 common signal)
				4	80 (20 segment signals, 4 common signal)
				6	108 (18 segment signals, 6 common signal)
				8	128 (16 segment signals, 8 common signal)
	Capacitor split	VCC reference	1/3	3	60 (20 segment signals, 3 common signal)
				4	80 (20 segment signals, 4 common signal)
				6	108 (18 segment signals, 6 common signal)
				8	128 (16 segment signals, 8 common signal)
		VL4 reference	1/3	3	60 (20 segment signals, 3 common signal)
				4	80 (20 segment signals, 4 common signal)
				6	108 (18 segment signals, 6 common signal)
				8	128 (16 segment signals, 8 common signal)

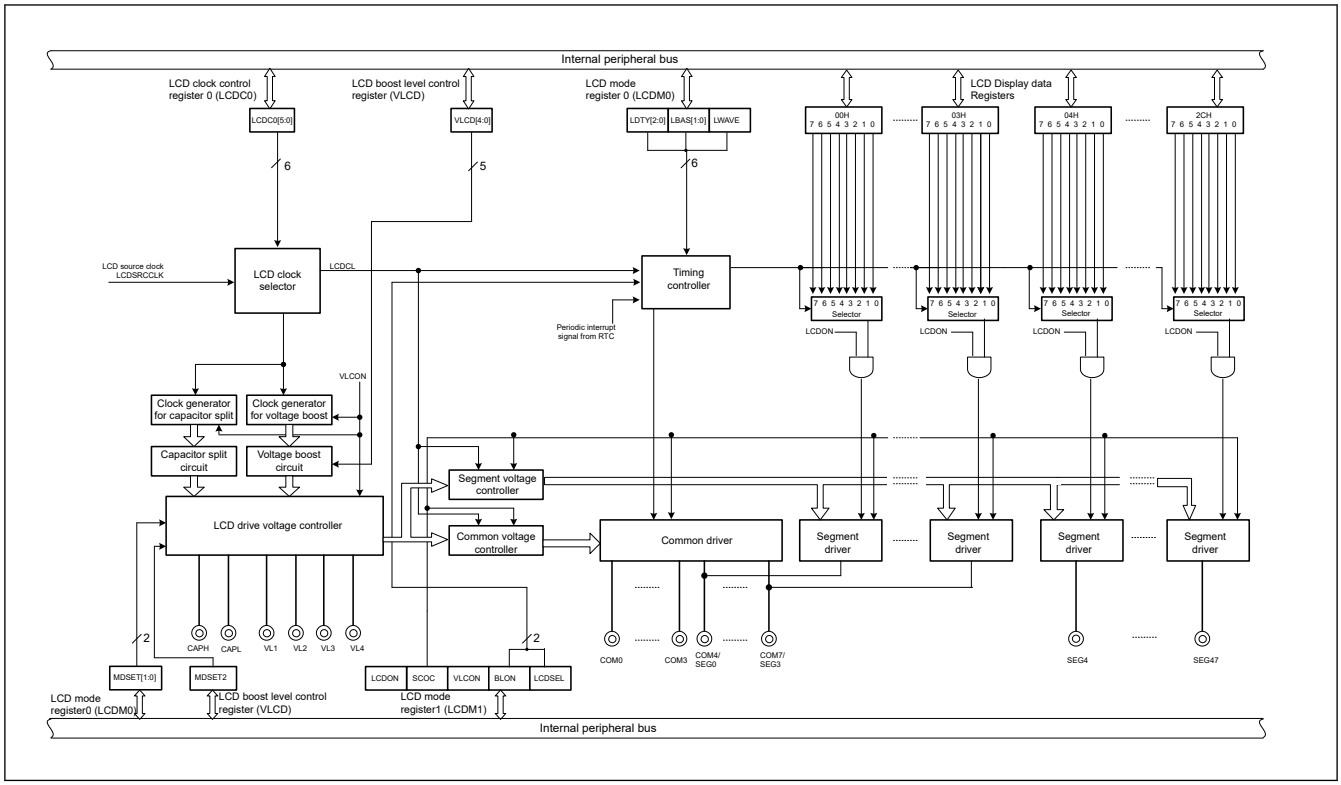

Figure 40.1 SLCDC block diagram

40.2 Register Descriptions

40.2.1 LCDM0 : LCD Mode Register 0

Base address: SLCDC = 0x400D_4000

Offset address: 0x00

Bit position:	7	6	5	4	3	2	1	0
Bit field:	MDSET[1:0]		LWAVE	LDTY[2:0]			LBAS[1:0]	
Value after reset:	0	0	0	0	0	0	0	0

Bit	Symbol	Function	R/W
1:0	LBAS[1:0]	LCD Display Bias Method Select 0 0: 1/2 bias method 0 1: 1/3 bias method 1 0: 1/4 bias method 1 1: Setting prohibited	R/W
4:2	LDTY[2:0]	Time Slice of LCD Display Select 0 0 0: Static 0 0 1: 2-time slice 0 1 0: 3-time slice 0 1 1: 4-time slice 1 0 0: 6-time slice 1 0 1: 8-time slice Others: Setting prohibited	R/W
5	LWAVE	LCD Display Waveform Select 0: Waveform A 1: Waveform B	R/W

Bit	Symbol	Function	R/W
7:6	MDSET[1:0]	LCD Drive Voltage Generator Select 0 0: External resistance division method 0 1: Internal voltage boosting method 1 0: Capacitor split method 1 1: Setting prohibited	R/W

Note:
- Do not rewrite the LCDM0 value when the SCOC bit of the LCDM1 register is 1.
- Only combinations of the display waveform, number of time slices, and bias method shown in Table 40.6 are supported. Combinations of settings not shown in Table 40.6 are prohibited.

LBAS[1:0] bits (LCD Display Bias Method Select)

The LBAS[1:0] bits select the LCD display bias.

When static is selected (LDTY[2:0] = 000b), set the LBAS[1:0] bits to the default value (00b). Otherwise, the operation is not guaranteed.

LDTY[2:0] bits (Time Slice of LCD Display Select)

The LDTY[2:0] bits select the number of time slice on the LCD display.

LWAVE bit (LCD Display Waveform Select)

The LWAVE bit selects the waveform A or waveform B for the LCD display.

MDSET[1:0] bits (LCD Drive Voltage Generator Select)

The MDSET[1:0] bits and the MDSET2 bit of VLCD register select the LCD drive voltage generation method. See Table 40.9 for details.

Table 40.6 Combinations of display waveform, time slices, bias method, and frame frequency (1 of 2)

Display mode			Set value						Driving voltage generation method				
										Internal voltage boosting		Capacitor split	
Display waveform	Number of time slices	Bias mode	LWAVE	LDTY[2:0]			LBAS[1:0]		External resistance division	VL1 reference	VL2 reference	VCC reference	VL4 reference
Waveform A	8	1/4	0	1	0	1	1	0	A (24 to 128)	A (24 to 64)	N/A	N/A	N/A
Waveform A	6	1/4	0	1	0	0	1	0	N/A	A (32 to 86)	N/A	N/A	N/A
Waveform A	8	1/3	0	1	0	1	0	1	A (32 to 128)	A (32 to 64)	A (32 to 64)	A (32 to 128)	A (32 to 128)
Waveform A	6	1/3	0	1	0	0	0	1	A (32 to 128)	A (32 to 86)	A (32 to 86)	A (32 to 128)	A (32 to 128)
Waveform A	4	1/3	0	0	1	1	0	1	A (24 to 128)	A (24 to 128)	A (24 to 128)	A (24 to 128)	A (24 to 128)
Waveform A	3	1/3	0	0	1	0	0	1	A (32 to 128)	A (32 to 128)	A (32 to 128)	A (32 to 128)	A (32 to 128)
Waveform A	3	1/2	0	0	1	0	0	0	A (32 to 128)	N/A	N/A	N/A	N/A
Waveform A	2	1/2	0	0	0	1	0	0	A (24 to 128)	N/A	N/A	N/A	N/A
Waveform A	Static		0	0	0	0	0	0	A (24 to 128)	N/A	N/A	N/A	N/A

Table 40.6 Combinations of display waveform, time slices, bias method, and frame frequency (2 of 2)

Display mode			Set value						Driving voltage generation method				
										Internal voltage boosting		Capacitor split	
Display waveform	Number of time slices	Bias mode	LWAVE	LDTY[2:0]			LBAS[1:0]		External resistance division	VL1 reference	VL2 reference	VCC reference	VL4 reference
Waveform B	8	1/4	1	1	0	1	1	0	A (24 to 128)	A (24 to 64)	N/A	N/A	N/A
Waveform B	8	1/3	1	1	0	1	0	1	A (32 to 128)	A (32 to 64)	A (32 to 64)	A (32 to 128)	A (32 to 128)
Waveform B	6	1/3	1	1	0	0	0	1	A (32 to 128)	A (32 to 86)	A (32 to 86)	A (32 to 128)	A (32 to 128)
Waveform B	4	1/3	1	0	1	1	0	1	A (24 to 128)	A (24 to 128)	A (24 to 128)	A (24 to 128)	A (24 to 128)
Waveform B	3	1/3	1	0	1	0	0	1	A (32 to 128)	A (32 to 128)	A (32 to 128)	A (32 to 128)	A (32 to 128)

Note: A: Available
N/A: Not available
() indicates frame frequency [Hz] that is selectable.

40.2.2 LCDM1 : LCD Mode Register 1

Base address: SLCDC = 0x400D_4000

Offset address: 0x01

Bit position:	7	6	5	4	3	2	1	0
Bit field:	LCDON	SCOC	VLCON	BLON	LCDSEL	—	—	LCDVLM
Value after reset:	0	0	0	0	0	0	0	0

Bit	Symbol	Function	R/W
0	LCDVLM	Voltage Boosting Pin Initial Value Switching Control For the condition 2.7 V ≤ VCC ≤ 3.6 V, any value can be set. 0: Set when VCC ≥ 2.7 V 1: Set when VCC ≤ 3.6 V	R/W
2:1	—	These bits are read as 0. The write value should be 0.	R/W
3	LCDSEL	Display Area Data Selection 0: Display an A-pattern area data (lower 4 bits of LCD display data register) 1: Display a B-pattern area data (higher 4 bits of LCD display data register)	R/W
4	BLON	Alternately Display A-pattern and B-pattern Area Data (blinking display) Control 0: Alternately display A-pattern and B-pattern area data (blinking display) disabled 1: Alternately display A-pattern and B-pattern area data (blinking display corresponding to the periodic interrupt (RTC_PRD) timing of the Realtime Clock (RTC)).	R/W
5	VLCON	Voltage Boost Circuit or Capacitor Split Circuit Operation Enable/Disable 0: Disable voltage boost circuit or capacitor split circuit operation 1: Enable voltage boost circuit or capacitor split circuit operation	R/W
6	SCOC	LCD Display Enable/Disable 0: Output ground level to segment/common pin 1: Display data to segment/common pin	R/W
7	LCDON	LCD Display Enable/Disable 0: Display off 1: Display on	R/W

Note: To use the internal voltage boosting method, specify the reference voltage using the VLCD register (select the internal boosting method by setting VLCD.MDSET2 bit to 0 or 1, the LCDM0.MDSET[1:0] bits to 01b if the default reference voltage is used), wait for the reference voltage setup time (minimum 10 ms), and then set the VLCON bit to 1.

LCDVLM bit (Voltage Boosting Pin Initial Value Switching Control)

The LCDVLM bit is used to improve voltage boost efficiency when using the voltage boost circuit by setting the initial VLX pin status. If VCC is 2.7 V or higher when voltage boosting starts, set the LCDVLM bit to 0. If VCC is 3.6 V or lower, set the LCDVLM bit to 1. If VCC is within the range between 2.7 V and 3.6 V, the LCDVLM bit may be set to 0 or 1.

When the external resistance division method is set (VLCD.MDSET2 = 0 or 1, LCDM0.MDSET[1:0] = 00b) or the capacitor split method is set (VLCD.MDSET2 = 0 or 1, LCDM0.MDSET[1:0] = 10b), set the LCDVLM bit to 0.

Do not rewrite the VLCON and LCDVLM bits while SCOC = 1.

LCDSEL and BLON bits (Display Area Data Selection and Alternately Display A-pattern and B-pattern Area Data (blinking display) Control)

The LCDSEL and BLON bits can be set to 1 only when 4 or less is selected as the number of time slices for the display mode.

Set the BLON and LCDSEL bits to 0 when 6 or 8 is selected as the number of time slices for the display mode (setting BLON or LCDSEL to 1 is prohibited).

When BLON = 1, setting LCDSEL has no effect.

When LOCO, MOSC, or HOCO is selected as the LCD source clock (LCDSRCCLK), be sure to set the BLON bit to 0.

VLCON bit (Voltage Boost Circuit or Capacitor Split Circuit Operation Enable/Disable)

When SCOC = 1, rewriting the VLCON bit value is prohibited. Operation is not guaranteed when rewritten. However, it is possible to write the same value.

When the external resistance division mode is selected, setting VLCON to 1 is prohibited.

SCOC and LCDON bits (LCD Display Enable/Disable)

The SCOC and LCDON bits control the LCD display enable/disable.

Display is off when common output is the selected signal output. All segment outputs are deselected signal outputs.

Display is on when common and segment outputs are based on the LCD display data.

To reduce power consumption when nothing is to be displayed on the LCD while the voltage boost circuit is in use, set the SCOC and VLCON bits to 0 and set the LCDM0.MDSET[1:0] bits to 00b. When LCDM0.MDSET[1:0] = 01b, the internal reference voltage generator operates and consumes power.

40.2.3 LCDC0 : LCD Clock Control Register 0

Base address: SLCDC = 0x400D_4000

Offset address: 0x02

Bit position:	7	6	5	4	3	2	1	0
Bit field:	—	—	LCDC0[5:0]					
Value after reset:	0	0	0	0	0	0	0	0

Bit	Symbol	Function	R/W
5:0	LCDC0[5:0]	LCD Clock (LCDCL) Setting 0x1: (SOSC)/2^2 or (LOCO)/2^2 0x2: (SOSC)/2^3 or (LOCO)/2^3 0x3: (SOSC)/2^4 or (LOCO)/2^4 0x4: (SOSC)/2^5 or (LOCO)/2^5 0x5: (SOSC)/2^6 or (LOCO)/2^6 0x6: (SOSC)/2^7 or (LOCO)/2^7 0x7: (SOSC)/2^8 or (LOCO)/2^8 0x8: (SOSC)/2^9 or (LOCO)/2^9 0x9: (SOSC)/2^{10} or (LOCO)/2^{10} 0x11: (MOSC)/2^8 or (HOCO)/2^8 0x12: (MOSC)/2^9 or (HOCO)/2^9 0x13: (MOSC)/2^{10} or (HOCO)/2^{10} 0x14: (MOSC)/2^{11} or (HOCO)/2^{11} 0x15: (MOSC)/2^{12} or (HOCO)/2^{12} 0x16: (MOSC)/2^{13} or (HOCO)/2^{13} 0x17: (MOSC)/2^{14} or (HOCO)/2^{14} 0x18: (MOSC)/2^{15} or (HOCO)/2^{15} 0x19: (MOSC)/2^{16} or (HOCO)/2^{16} 0x1A: (MOSC)/2^{17} or (HOCO)/2^{17} 0x1B: (MOSC)/2^{18} or (HOCO)/2^{18} 0x2B: (MOSC)/2^{19} or (HOCO)/2^{19} 0x3B: (MOSC)/2^{20} or (HOCO)/2^{20} Others: Settings are prohibited	R/W
7:6	—	These bits are read as 0. The write value should be 0.	R/W

Note: The LCDSCKSEL[2:0] bits of SLCDSCKCR register select LOCO, SOSC, MOSC, or HOCO clock as the LCD clock source (LCDSRCCLK). See section 8.2.23. SLCDSCKCR : Segment LCD Source Clock Control Register for details.

LCDC0[5:0] bits (LCD Clock (LCDCL) Setting)

Set the frame frequency in a range from 32 Hz to 128 Hz (24 to 128 Hz when the condition is selected, see Table 40.6 for details). Set the LCD clock (LCDCL) to no more than 512 Hz when using the internal voltage boosting method and the capacitor split method.

Do not set LCDC0 when the LCDM1.SCOC bit is 1.

40.2.4 VLCD : LCD Boost Level Control Register

Base address: SLCDC = 0x400D_4000

Offset address: 0x03

Bit position:	7	6	5	4	3	2	1	0
Bit field:	MDSET2	—	—	VLCD[4:0]				
Value after reset:	0	0	0	0	0	1	0	0

Bit	Symbol	Function	R/W
4:0	VLCD[4:0]	Reference Voltage Select (Contrast Adjustment) 0x4: 1.01 V (VL1 reference voltage) 2.02 V (VL2 reference voltage) 0x5: 1.04 V (VL1 reference voltage) 2.09 V (VL2 reference voltage) 0x6: 1.07 V (VL1 reference voltage) 2.16 V (VL2 reference voltage) 0x7: 1.11 V (VL1 reference voltage) 2.22 V (VL2 reference voltage) 0x8: 1.14 V (VL1 reference voltage) 2.29 V (VL2 reference voltage) 0x9: 1.17 V (VL1 reference voltage) 2.36 V (VL2 reference voltage) 0xA: 1.21 V (VL1 reference voltage) 2.42 V (VL2 reference voltage) 0xB: 1.24 V (VL1 reference voltage) 2.49 V (VL2 reference voltage) 0xC: 1.27 V (VL1 reference voltage) 2.56 V (VL2 reference voltage) 0xD: 1.31 V (VL1 reference voltage) 2.62 V (VL2 reference voltage) 0xE: 1.34 V (VL1 reference voltage) 2.69 V (VL2 reference voltage) 0xF: 1.37 V (VL1 reference voltage) 2.76 V (VL2 reference voltage) 0x10: 1.40 V (VL1 reference voltage) 2.82 V (VL2 reference voltage) 0x11: 1.44 V (VL1 reference voltage) 2.89 V (VL2 reference voltage) 0x12: 1.47 V (VL1 reference voltage) 2.96 V (VL2 reference voltage) 0x13: 1.50 V (VL1 reference voltage) 3.02 V (VL2 reference voltage) 0x14: 1.54 V (VL1 reference voltage) 3.09 V (VL2 reference voltage) 0x15: 1.57 V (VL1 reference voltage) 3.15 V (VL2 reference voltage) 0x16: 1.60 V (VL1 reference voltage) 3.22 V (VL2 reference voltage) 0x17: 1.64 V (VL1 reference voltage) 3.29 V (VL2 reference voltage) 0x18: 1.67 V (VL1 reference voltage) 3.35 V (VL2 reference voltage) 0x19: 1.70 V (VL1 reference voltage) 3.42 V (VL2 reference voltage) 0x1A: 1.74 V (VL1 reference voltage) 3.49 V (VL2 reference voltage) Others: Setting prohibited	R/W
6:5	—	These bits are read as 0. The write value should be 0.	R/W
7	MDSET2	Reference Voltage Selection 0: External resistance division method or VL1 reference mode of internal voltage boosting method or VCC reference mode of capacitor split method 1: VL2 reference mode of internal voltage boosting method or VL4 reference mode of capacitor split method	R/W

VLCD[4:0] bits (Reference Voltage Select (Contrast Adjustment))

The VLCD[4:0] bit setting is valid only when the voltage boost circuit is operating.

Be sure to change the VLCD value after stopping the operation of the voltage boost circuit (VLCON = 0).

To use the internal voltage boosting method, specify the reference voltage using the VLCD register (select the internal boosting method by setting the VLCD.MDSET2 = 0 or 1, LCDM0.MDSET[1:0] bits to 01b, if the default reference voltage is used), wait for the reference voltage setup time (minimum 10 ms), then set VLCON to 1.

When using the external resistance division method and the capacitor split method, use the default value (04h) for the VLCD resistor.

Combinations of contrast adjustment of VL1 voltage reference is listed in Table 40.7.

Combinations of contrast adjustment of VL2 voltage reference is listed in Table 40.8.

Table 40.7 List of combinations of contrast adjustment when {MDSET2,MDSET[1:0]} = 001 (VL1 voltage reference)

VLCD [4:0]					VL1 voltage reference	VL4 voltage	
						1/3 bias method	1/4 bias method
0	0	1	0	0	1.01 V	3.03 V	4.04 V
0	0	1	0	1	1.04 V	3.12 V	4.16 V
0	0	1	1	0	1.07 V	3.21 V	4.28 V
0	0	1	1	1	1.11 V	3.33 V	4.44 V
0	1	0	0	0	1.14 V	3.42 V	4.56 V
0	1	0	0	1	1.17 V	3.51 V	4.68 V
0	1	0	1	0	1.21 V	3.63 V	4.84 V
0	1	0	1	1	1.24 V	3.72 V	4.96 V
0	1	1	0	0	1.27 V	3.81 V	5.08 V
0	1	1	0	1	1.31 V	3.93 V	5.24 V
0	1	1	1	0	1.34 V	4.02 V	Setting prohibited
0	1	1	1	1	1.37 V	4.11 V	
1	0	0	0	0	1.40 V	4.20 V	
1	0	0	0	1	1.44 V	4.32 V	
1	0	0	1	0	1.47 V	4.41 V	
1	0	0	1	1	1.50 V	4.50 V	
1	0	1	0	0	1.54 V	4.62 V	
1	0	1	0	1	1.57 V	4.71 V	
1	0	1	1	0	1.60 V	4.80 V	
1	0	1	1	1	1.64 V	4.92 V	
1	1	0	0	0	1.67 V	5.01 V	
1	1	0	0	1	1.70 V	5.10 V	
1	1	0	1	0	1.74 V	5.22 V	

Note: Other settings are prohibited.

Table 40.8 List of combinations of contrast adjustment when {MDSET2,MDSET[1:0]} = 101 (VL2 voltage reference) (1 of 2)

VLCD [4:0]					VL2 voltage reference	VL4 voltage
						1/3 bias method
0	0	1	0	0	2.02 V	3.03 V
0	0	1	0	1	2.09 V	3.14 V
0	0	1	1	0	2.16 V	3.24 V
0	0	1	1	1	2.22 V	3.33 V
0	1	0	0	0	2.29 V	3.44 V
0	1	0	0	1	2.36 V	3.54 V
0	1	0	1	0	2.42 V	3.63 V
0	1	0	1	1	2.49 V	3.74 V
0	1	1	0	0	2.56 V	3.84 V
0	1	1	0	1	2.62 V	3.93 V

Table 40.8 List of combinations of contrast adjustment when {MDSET2,MDSET[1:0]} = 101 (VL2 voltage reference) (2 of 2)

VLCD [4:0]					VL2 voltage reference	VL4 voltage 1/3 bias method
0	1	1	1	0	2.69 V	4.04 V
0	1	1	1	1	2.76 V	4.14 V
1	0	0	0	0	2.82 V	4.23 V
1	0	0	0	1	2.89 V	4.34 V
1	0	0	1	0	2.96 V	4.44 V
1	0	0	1	1	3.02 V	4.53 V
1	0	1	0	0	3.09 V	4.64 V
1	0	1	0	1	3.15 V	4.73 V
1	0	1	1	0	3.22 V	4.83 V
1	0	1	1	1	3.29 V	4.94 V
1	1	0	0	0	3.35 V	5.03 V
1	1	0	0	1	3.42 V	5.13 V
1	1	0	1	0	3.49 V	5.24 V

Note: Other settings are prohibited.

MDSET2 bit (Reference Voltage Selection)

The MDSET2 bit is used to select the reference voltage generator for the internal voltage boosting method and the capacitor split method. Set MDSET2 to 0 if internal voltage boosting method or capacitor split method is not used. See Table 40.9 for details.

Table 40.9 LCD drive voltage generation method by setting MDSET2, MDSET[1:0]

MDSET2 (VLCD.bit7)	MDSET[1] (LCDM0.bit7)	MDSET[0] (LCDM0.bit6)	Function
0	0	0	External resistance division method
0	0	1	VL1 reference mode of internal voltage boosting method
1			VL2 reference mode of internal voltage boosting method
0	1	0	VCC reference mode of capacitor split method
1			VL4 reference mode of capacitor split method

Note: Other settings are prohibited.

40.2.5 LCD Display Data Registers

The LCD Display Data registers are mapped as shown in Table 40.10 and Table 40.11. The contents displayed on the LCD can be modified by changing the contents of the LCD Display Data registers. Table 40.10 shows other than 6-time slice and 8-time-slice (static, 2-time slice, 3-time slice, and 4-time slice).

Table 40.10 Relationship between LCD Display Data register contents and segment/common outputs (1 of 3)

Register name	Address	b7	b6	b5	b4	b3	b2	b1	b0		
		COM7	COM6	COM5	COM4	COM3	COM2	COM1	COM0	100-pin	64-pin
SEG0	0x400D_4100	SEG0 (B-pattern area)				SEG0 (A-pattern area)				A	A
SEG1	0x400D_4101	SEG1 (B-pattern area)				SEG1 (A-pattern area)				A	A
SEG2	0x400D_4102	SEG2 (B-pattern area)				SEG2 (A-pattern area)				A	A
SEG3	0x400D_4103	SEG3 (B-pattern area)				SEG3 (A-pattern area)				A	A
SEG4	0x400D_4104	SEG4 (B-pattern area)				SEG4 (A-pattern area)				A	A
SEG5	0x400D_4105	SEG5 (B-pattern area)				SEG5 (A-pattern area)				A	A

Table 40.10 Relationship between LCD Display Data register contents and segment/common outputs (2 of 3)

Register name	Address	b7	b6	b5	b4	b3	b2	b1	b0	100-pin	64-pin
		COM7	COM6	COM5	COM4	COM3	COM2	COM1	COM0		
SEG6	0x400D_4106	SEG6 (B-pattern area)				SEG6 (A-pattern area)				A	N/A
SEG7	0x400D_4107	SEG7 (B-pattern area)				SEG7 (A-pattern area)				A	N/A
SEG8	0x400D_4108	SEG8 (B-pattern area)				SEG8 (A-pattern area)				A	N/A
SEG9	0x400D_4109	SEG9 (B-pattern area)				SEG9 (A-pattern area)				A	N/A
SEG10	0x400D_410A	SEG10 (B-pattern area)				SEG10 (A-pattern area)				A	N/A
SEG11	0x400D_410B	SEG11 (B-pattern area)				SEG11 (A-pattern area)				A	N/A
SEG12	0x400D_410C	SEG12 (B-pattern area)				SEG12 (A-pattern area)				A	N/A
SEG13	0x400D_410D	SEG13 (B-pattern area)				SEG13 (A-pattern area)				A	A
SEG14	0x400D_410E	SEG14 (B-pattern area)				SEG14 (A-pattern area)				A	N/A
SEG15	0x400D_410F	SEG15 (B-pattern area)				SEG15 (A-pattern area)				A	N/A
SEG16	0x400D_4110	SEG16 (B-pattern area)				SEG16 (A-pattern area)				A	N/A
SEG17	0x400D_4111	SEG17 (B-pattern area)				SEG17 (A-pattern area)				A	N/A
SEG18	0x400D_4112	SEG18 (B-pattern area)				SEG18 (A-pattern area)				A	N/A
SEG19	0x400D_4113	SEG19 (B-pattern area)				SEG19 (A-pattern area)				A	N/A
SEG20	0x400D_4114	SEG20 (B-pattern area)				SEG20 (A-pattern area)				A	N/A
SEG21	0x400D_4115	SEG21 (B-pattern area)				SEG21 (A-pattern area)				A	A
SEG22	0x400D_4116	SEG22 (B-pattern area)				SEG22 (A-pattern area)				A	A
SEG23	0x400D_4117	SEG23 (B-pattern area)				SEG23 (A-pattern area)				A	A
SEG24	0x400D_4118	SEG24 (B-pattern area)				SEG24 (A-pattern area)				A	A
SEG25	0x400D_4119	SEG25 (B-pattern area)				SEG25 (A-pattern area)				A	A
SEG26	0x400D_411A	SEG26 (B-pattern area)				SEG26 (A-pattern area)				A	N/A
SEG27	0x400D_411B	SEG27 (B-pattern area)				SEG27 (A-pattern area)				A	N/A
SEG28	0x400D_411C	SEG28 (B-pattern area)				SEG28 (A-pattern area)				A	N/A
SEG29	0x400D_411D	SEG29 (B-pattern area)				SEG29 (A-pattern area)				A	N/A
SEG30	0x400D_411E	SEG30 (B-pattern area)				SEG30 (A-pattern area)				A	N/A
SEG31	0x400D_411F	SEG31 (B-pattern area)				SEG31 (A-pattern area)				A	N/A
SEG32	0x400D_4120	SEG32 (B-pattern area)				SEG32 (A-pattern area)				A	N/A
SEG33	0x400D_4121	SEG33 (B-pattern area)				SEG33 (A-pattern area)				A	N/A
SEG34	0x400D_4122	SEG34 (B-pattern area)				SEG34 (A-pattern area)				A	N/A
SEG35	0x400D_4123	SEG35 (B-pattern area)				SEG35 (A-pattern area)				A	A
SEG36	0x400D_4124	SEG36 (B-pattern area)				SEG36 (A-pattern area)				A	A
SEG37	0x400D_4125	SEG37 (B-pattern area)				SEG37 (A-pattern area)				A	A
SEG38	0x400D_4126	SEG38 (B-pattern area)				SEG38 (A-pattern area)				A	A
SEG39	0x400D_4127	SEG39 (B-pattern area)				SEG39 (A-pattern area)				A	A
SEG40	0x400D_4128	SEG40 (B-pattern area)				SEG40 (A-pattern area)				A	A
SEG41	0x400D_4129	SEG41 (B-pattern area)				SEG41 (A-pattern area)				A	A
SEG42	0x400D_412A	SEG42 (B-pattern area)				SEG42 (A-pattern area)				A	A
SEG43	0x400D_412B	SEG43 (B-pattern area)				SEG43 (A-pattern area)				A	N/A
SEG44	0x400D_412C	SEG44 (B-pattern area)				SEG44 (A-pattern area)				A	N/A
SEG45	0x400D_412D	SEG45 (B-pattern area)				SEG45 (A-pattern area)				A	N/A
SEG46	0x400D_412E	SEG46 (B-pattern area)				SEG46 (A-pattern area)				A	N/A

Table 40.10 Relationship between LCD Display Data register contents and segment/common outputs (3 of 3)

Register name	Address	b7	b6	b5	b4	b3	b2	b1	b0	100-pin	64-pin
		COM7	COM6	COM5	COM4	COM3	COM2	COM1	COM0		
SEG47	0x400D_412F	SEG47 (B-pattern area)				SEG47 (A-pattern area)				A	N/A

Note: A: Available
N/A: Not available

Table 40.11 shows 6-time slice and 8-time-slice.

Table 40.11 Relationship between LCD Display Data register contents and segment/common outputs (1 of 2)

Register name	Address	b7	b6	b5	b4	b3	b2	b1	b0	100-pin	64-pin LQFP
		COM7	COM6	COM5	COM4	COM3	COM2	COM1	COM0		
SEG0	0x400D_4100	SEG0*1								A	A
SEG1	0x400D_4101	SEG1*1								A	A
SEG2	0x400D_4102	SEG2*1								A	A
SEG3	0x400D_4103	SEG3*1								A	A
SEG4	0x400D_4104	SEG4								A	A
SEG5	0x400D_4105	SEG5								A	A
SEG6	0x400D_4106	SEG6								A	N/A
SEG7	0x400D_4107	SEG7								A	N/A
SEG8	0x400D_4108	SEG8								A	N/A
SEG9	0x400D_4109	SEG9								A	N/A
SEG10	0x400D_410A	SEG10								A	N/A
SEG11	0x400D_410B	SEG11								A	N/A
SEG12	0x400D_410C	SEG12								A	N/A
SEG13	0x400D_410D	SEG13								A	A
SEG14	0x400D_410E	SEG14								A	N/A
SEG15	0x400D_410F	SEG15								A	N/A
SEG16	0x400D_4110	SEG16								A	N/A
SEG17	0x400D_4111	SEG17								A	N/A
SEG18	0x400D_4112	SEG18								A	N/A
SEG19	0x400D_4113	SEG19								A	N/A
SEG20	0x400D_4114	SEG20								A	N/A
SEG21	0x400D_4115	SEG21								A	A
SEG22	0x400D_4116	SEG22								A	A
SEG23	0x400D_4117	SEG23								A	A
SEG24	0x400D_4118	SEG24								A	A
SEG25	0x400D_4119	SEG25								A	A
SEG26	0x400D_411A	SEG26								A	N/A
SEG27	0x400D_411B	SEG27								A	N/A
SEG28	0x400D_411C	SEG28								A	N/A
SEG29	0x400D_411D	SEG29								A	N/A
SEG30	0x400D_411E	SEG30								A	N/A
SEG31	0x400D_411F	SEG31								A	N/A
SEG32	0x400D_4120	SEG32								A	N/A

Table 40.11 Relationship between LCD Display Data register contents and segment/common outputs (2 of 2)

Register name	Address	b7	b6	b5	b4	b3	b2	b1	b0	100-pin	64-pin LQFP
		COM7	COM6	COM5	COM4	COM3	COM2	COM1	COM0		
SEG33	0x400D_4121	SEG33								A	N/A
SEG34	0x400D_4122	SEG34								A	N/A
SEG35	0x400D_4123	SEG35								A	A
SEG36	0x400D_4124	SEG36								A	A
SEG37	0x400D_4125	SEG37								A	A
SEG38	0x400D_4126	SEG38								A	A
SEG39	0x400D_4127	SEG39								A	A
SEG40	0x400D_4128	SEG40								A	A
SEG41	0x400D_4129	SEG41								A	A
SEG42	0x400D_412A	SEG42								A	A
SEG43	0x400D_412B	SEG43								A	N/A
SEG44	0x400D_412C	SEG44								A	N/A
SEG45	0x400D_412D	SEG45								A	N/A
SEG46	0x400D_412E	SEG46								A	N/A
SEG47	0x400D_412F	SEG47								A	N/A

Note: A: Available
N/A: Not available
All LCD Display Data registers (SEG0 to SEG47) have an initial value of 0x00, and all bits that are read/write.
Note 1. The COM4 to COM7 pins and SEG0 to SEG3 pins are used alternatively. For more information, see section 18, I/O Ports.

When the number of time slices is static, two, three, or four, the lower 4 bits and upper 4 bits of each address of the LCD Display Data register become an A-pattern area and a B-pattern area, respectively.

The association between A-pattern area data and COM signals is as follows:

Bit [0] ↔ COM0, bit [1] ↔ COM1, bit [2] ↔ COM2, and bit [3] ↔ COM3.

The association between B-pattern area data and COM signals is as follows:

Bit [4] ↔ COM0, bit [5] ↔ COM1, bit [6] ↔ COM2, and bit [7] ↔ COM3.

A-pattern area data is displayed on the LCD panel when BLON = LCDSEL = 0 is selected, and B-pattern area data is displayed on the LCD panel when BLON = 0 and LCDSEL = 1 is selected.

40.3 Selection of LCD Display Data Register

When the number of time slices is static, two, three, or four, the LCD Display Data register can be selected from the following types, based on the BLON and LCDSEL bit settings:

- Displaying an A-pattern area data (lower 4 bits of LCD Display Data register)
- Displaying a B-pattern area data (upper 4 bits of LCD Display Data register)
- Alternately displaying an A-pattern and B-pattern area data (blinking display associated with the periodic interrupt timing of the Realtime Clock (RTC))

Note: If the normal liquid crystal waveform is displayed when the number of time slices is six or eight, LCD Display Data registers (A-pattern, B-pattern, or blinking display) cannot be selected.

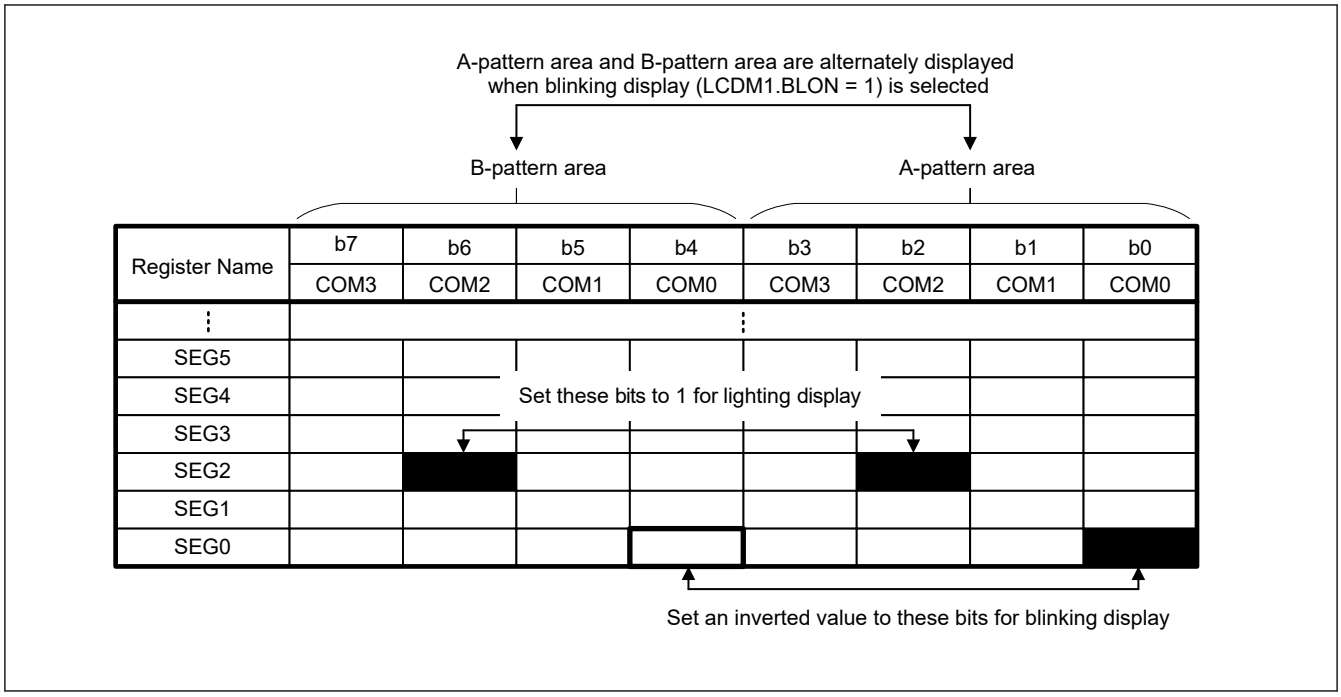

Figure 40.2 Example for setting LCD Display Data registers when the pattern is changed

40.3.1 A-pattern Area and B-pattern Area Data Display

When both BLON and LCDSEL are 0, A-pattern area (lower 4 bits of the LCD Display Data register) data is output as the LCD Display register.

When BLON is 0 and LCDSEL is 1, B-pattern area (upper 4 bits of the LCD Display Data register) data is output as the LCD Display register.

For details on the display area, see section 40.2.5. LCD Display Data Registers.

40.3.2 Blinking Display (Alternately Displaying A-pattern and B-pattern Area Data)

When BLON is set to 1, A-pattern and B-pattern area data are alternately displayed, according to the constant-period interrupt timing of the Realtime Clock (RTC). See section 22, Realtime Clock (RTC) for information about the setting of the RTC constant-period interrupt (0.5 s setting only) timing.

To use the LCD blinking display feature, set inverted values to the B-pattern area bits associated with the A-pattern area bits. For example, set bit [0] of SEG0 register to 1, and set bit [4] of SEG0 register to 0 to use the blinking display. When not using the blinking display feature, set the same values to both the A-pattern and B-pattern area bits. For example, set bit [2] of SEG2 register to 1, and set bit [6] of SEG2 register to 1 for lighting display. For details on the display area, see section 40.2.5. LCD Display Data Registers.

Figure 40.3 and Figure 40.4 show the timing operation of display switching.

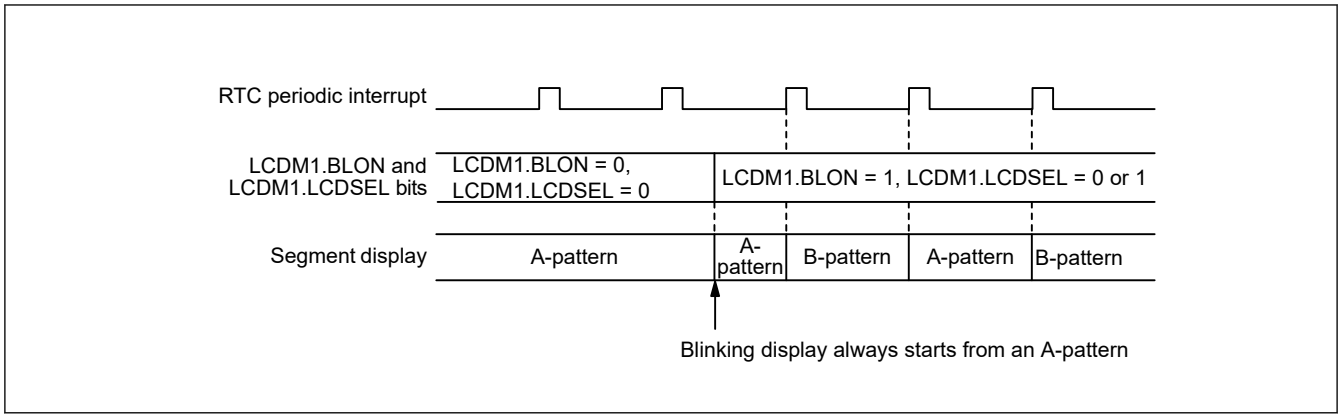

Figure 40.3 Switching operation from A-pattern display to blinking display

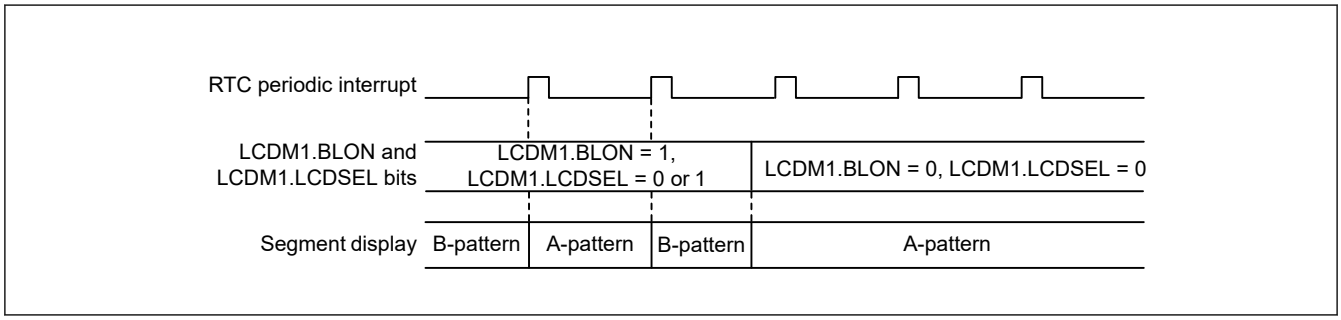

Figure 40.4 Switching operation from blinking display to A-pattern display

40.4 Setting LCD Controller/Driver

To operate the LCD controller/driver, follow procedures (1) External resistance division method during normal liquid crystal waveform display to (3) Capacitor split method in this section. Otherwise, LCD operation is not guaranteed.

(1) External resistance division method during normal liquid crystal waveform display

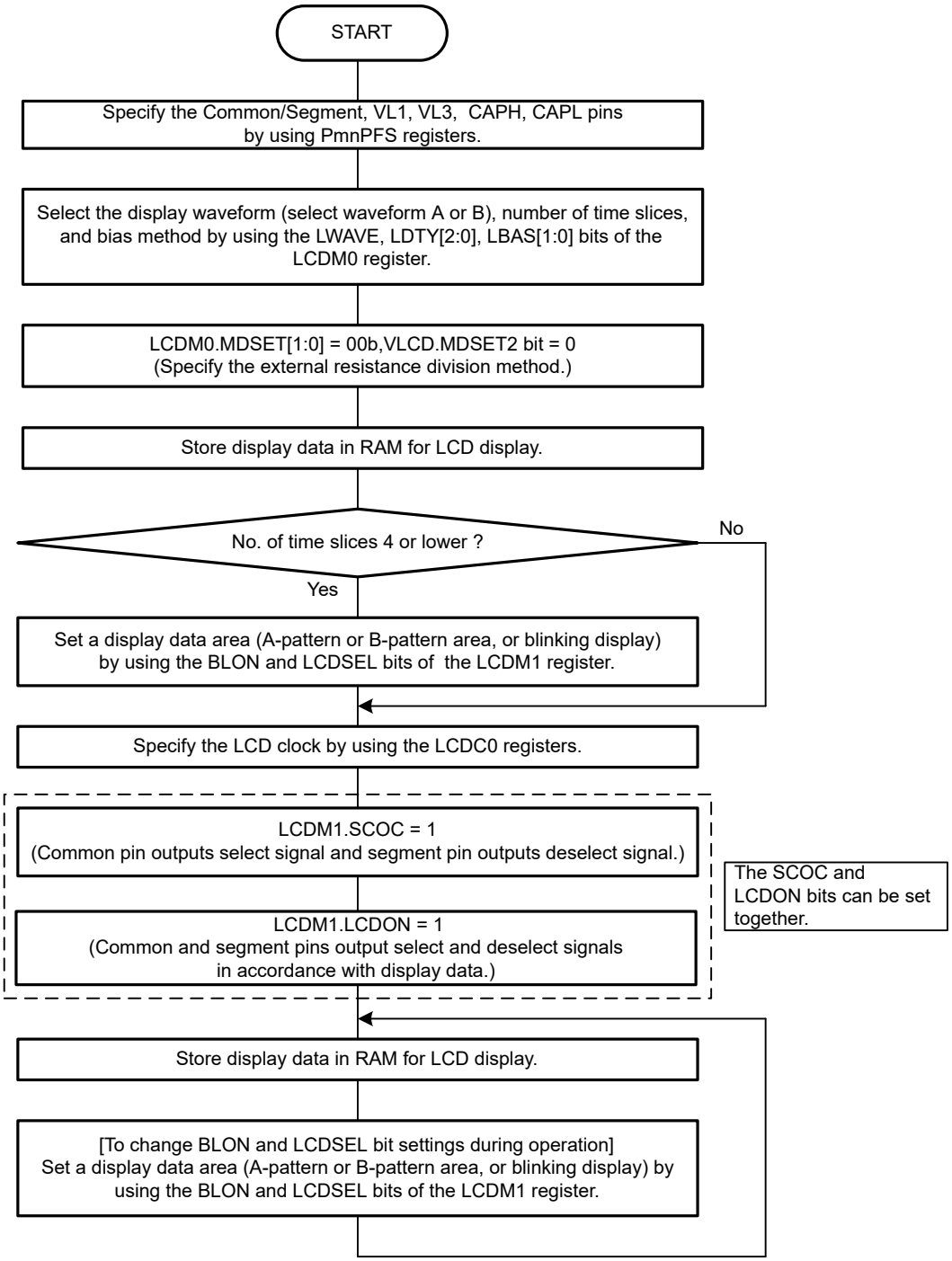

Note: Set P411PFS.PMR = 1 and P411PFS.PSEL[4:0] = 01101b for VL1, P408PFS.PMR = 1 and P408PFS.PSEL[4:0] = 01101b for VL3, P206PFS.PMR = 1 and P206PFS.PSEL[4:0] = 01101b for CAPL, P207PFS.PMR = 1 and P207PFS.PSEL[4:0] = 01101b for CAPH, and PmnPFS of common/segment, so that they can be used as LCD function. See section 18.6. Peripheral Select Settings for Each Product for details.

Figure 40.5 Setting procedure for external resistance division method during normal liquid crystal waveform display

(2) Internal voltage boosting method

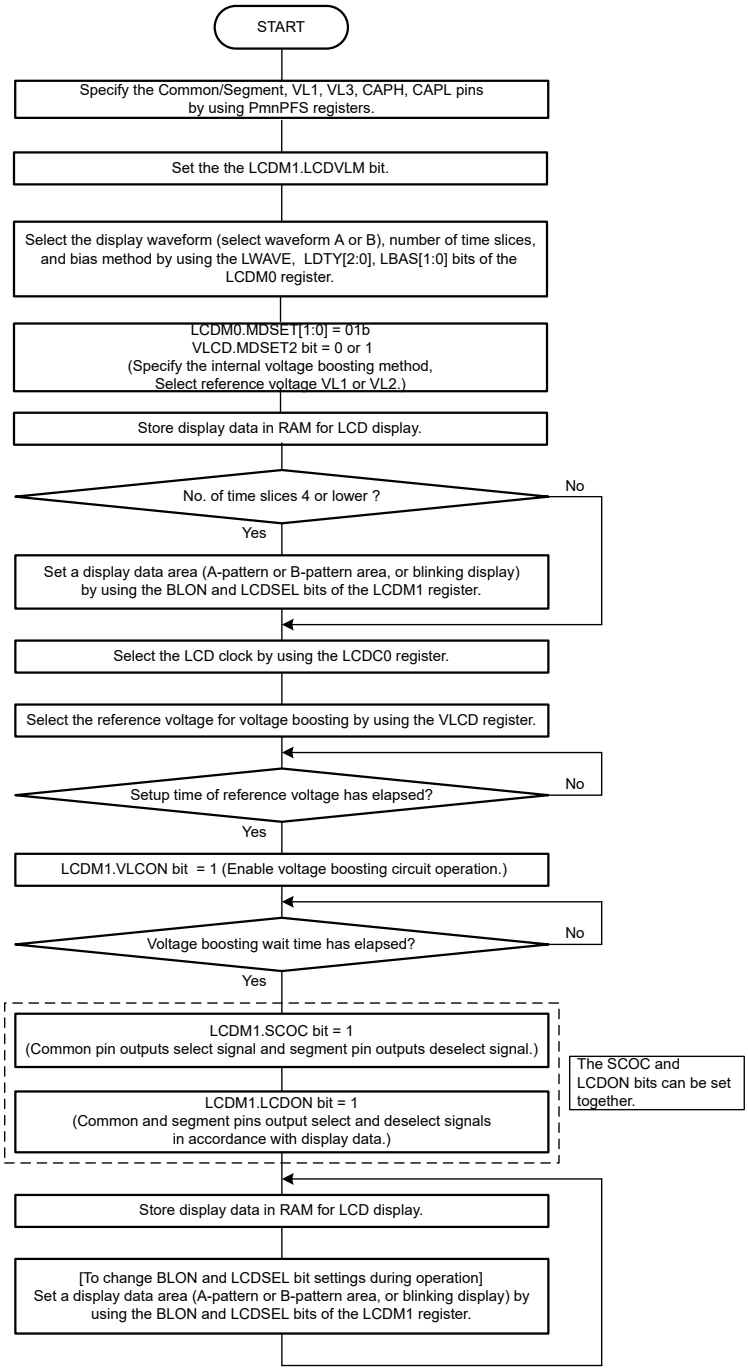

Note: Set P411PFS.PMR = 1 and P411PFS.PSEL[4:0] = 01101b for VL1, P408PFS.PMR = 1 and P408PFS.PSEL[4:0] = 01101b for VL3, P206PFS.PMR = 1 and P206PFS.PSEL[4:0] = 01101b for CAPL, P207PFS.PMR = 1 and P207PFS.PSEL[4:0] = 01101b for CAPH, and PmnPFS of common/segment, so that they can be used as LCD function. See section 18.6. Peripheral Select Settings for Each Product for details.

Figure 40.6 Setting procedure for internal voltage boosting method during normal liquid crystal waveform display

(3) Capacitor split method

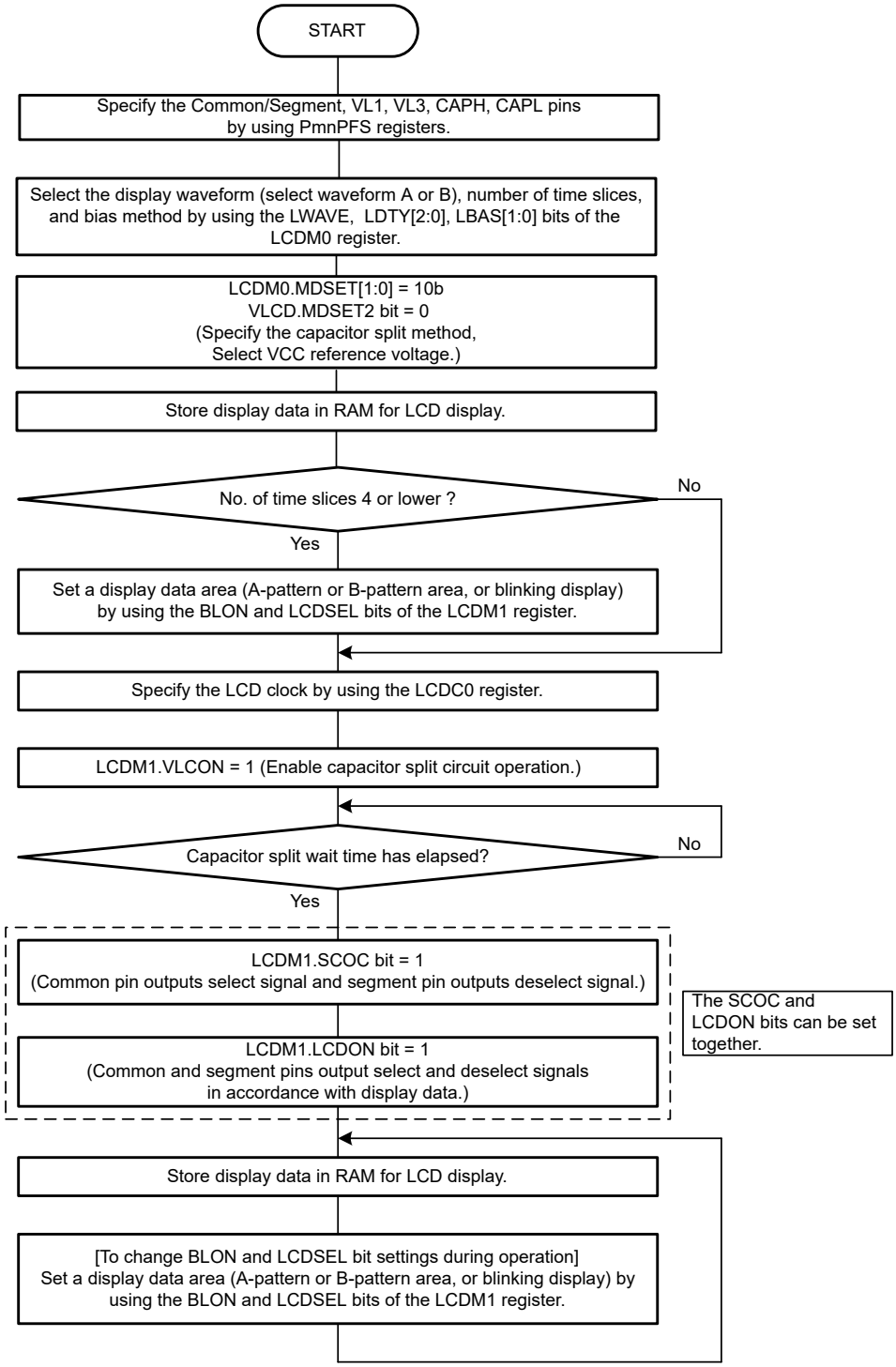

Note: Set P411PFS.PMR = 1 and P411PFS.PSEL[4:0] = 01101b for VL1, P408PFS.PMR = 1 and P408PFS.PSEL[4:0] = 01101b for VL3, P206PFS.PMR = 1 and P206PFS.PSEL[4:0] = 01101b for CAPL, P207PFS.PMR = 1 and P207PFS.PSEL[4:0] = 01101b for CAPH, and PmnPFS of common/segment, so that they can be used as LCD function. See section 18.6. Peripheral Select Settings for Each Product for details.

Figure 40.7 Setting procedure for VCC reference mode of capacitor split method during normal liquid crystal waveform display

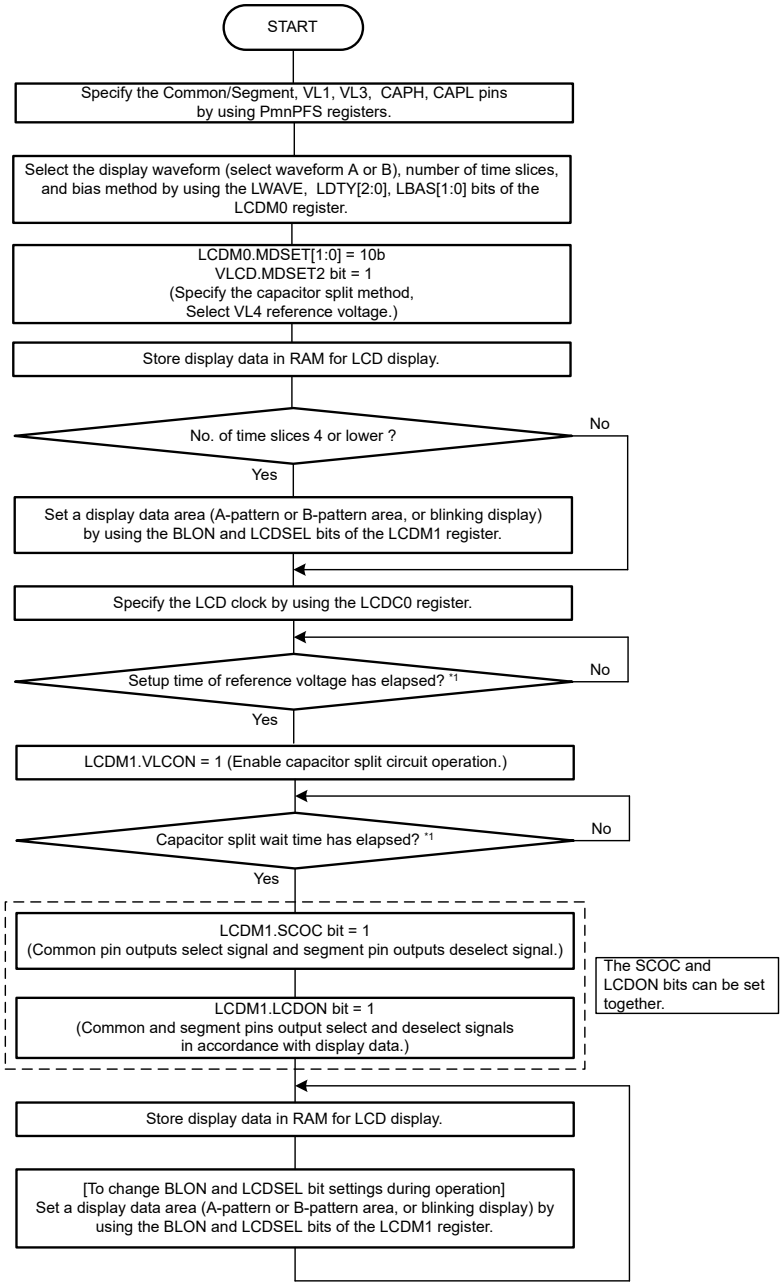

Note: Set P411PFS.PMR = 1 and P411PFS.PSEL[4:0] = 01101b for VL1, P408PFS.PMR = 1 and P408PFS.PSEL[4:0] = 01101b for VL3, P206PFS.PMR = 1 and P206PFS.PSEL[4:0] = 01101b for CAPL, P207PFS.PMR = 1 and P207PFS.PSEL[4:0] = 01101b for CAPH, and PmnPFS of common/segment, so that they can be used as LCD function. See section 18.6. Peripheral Select Settings for Each Product for details.

Note 1. See section 40.6.3. Capacitor Split Method (VL4 reference) for the specification of reference voltage setup time (t_{VL4S}) and capacitor split wait time (t_{WAIT}).

Figure 40.8 Setting procedure for VL4 reference mode of capacitor split method during normal liquid crystal waveform display

40.5 Operation Stop Procedure

To stop the LCD operation, follow the steps shown in Figure 40.9.

The LCD stops operating when the LCDM1.LDCON and LCDM1.SCOC bits are set to 0.

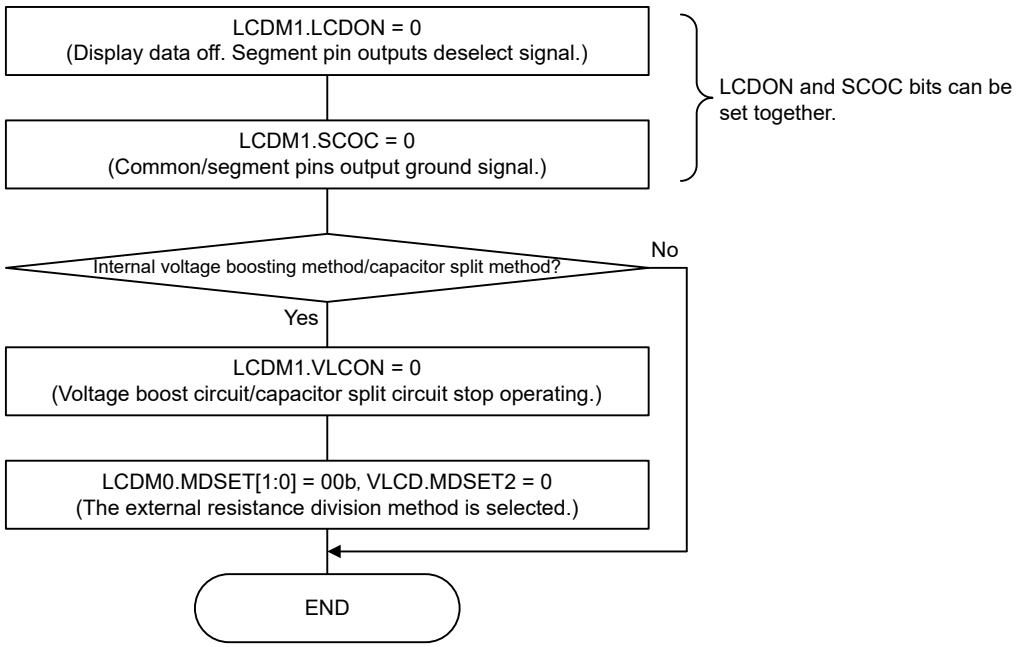

Note: Stopping the voltage boost or capacitor split circuits is prohibited while the display is on (SCOC and LCDON bits of LCDM1 register = 00b). Otherwise, the operation is not guaranteed. Be sure to turn off the display (SCOC and LCDON bits of LCDM1 register = 00b) before stopping the voltage boost/capacitor split circuits (LCDM1.VLCON = 0).

Figure 40.9 Operation stop procedure during normal liquid crystal waveform (A or B) display

40.6 Supplying LCD Drive Voltages VL1, VL2, VL3, and VL4

The power supply voltages for the LCD driver can be produced through external resistance division method, internal voltage boosting method, or capacitor split method.

40.6.1 External Resistance Division Method

Figure 40.10 and Figure 40.11 show examples of the LCD drive power supply connection, associated with each bias method.

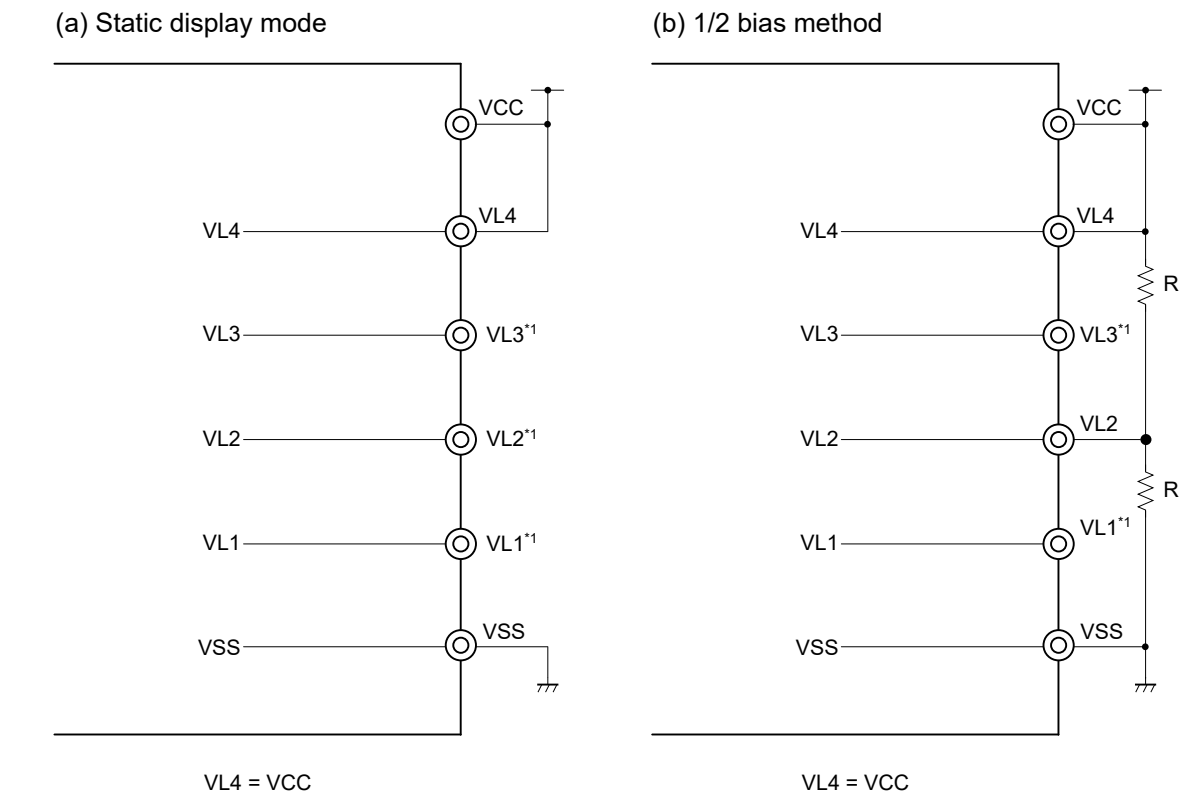

Note 1. It can be used as a port

Figure 40.10 Examples of LCD drive power connections using the external resistance division method (1 of 2)

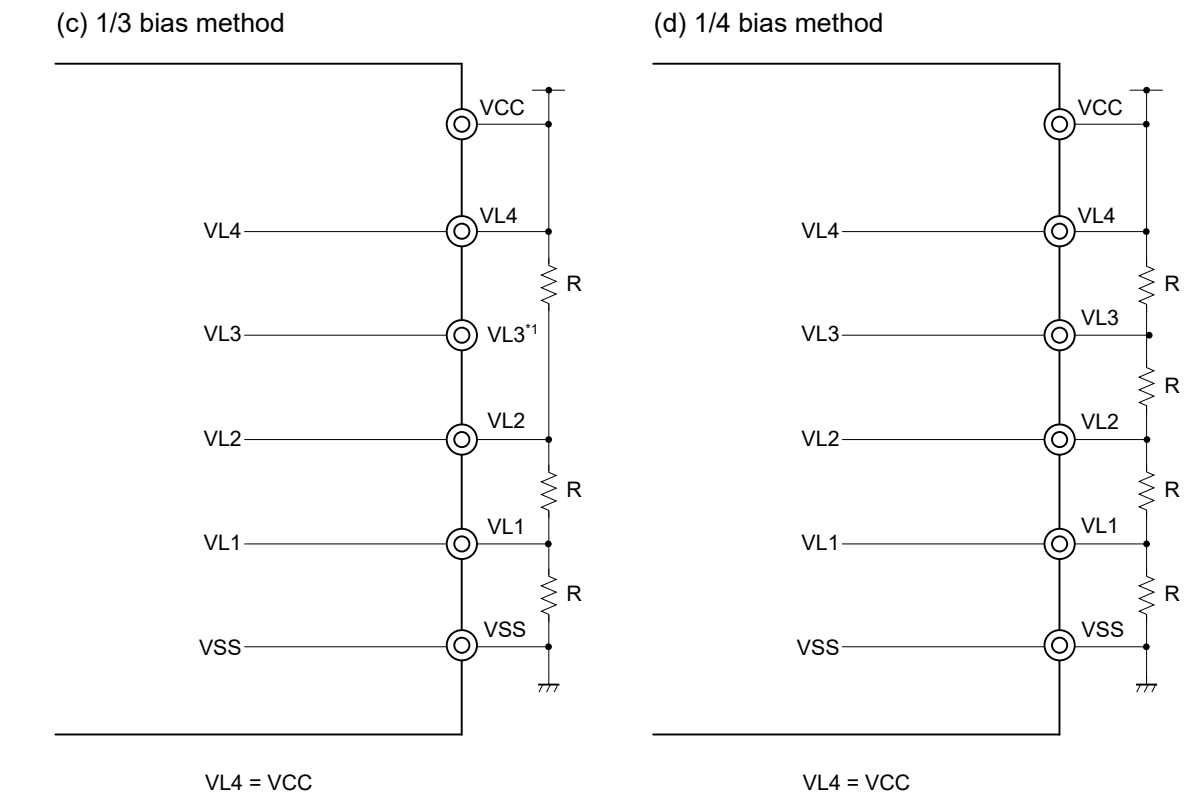

Note 1. VL3 can be used as a port.

Figure 40.11 Examples of LCD drive power connections using the external resistance division method (2 of 2)

Note: The reference resistance R value for external resistance division is 10 kΩ to 50 kΩ. In addition, to stabilize the voltage at the VL1 to VL4 pins, connect a capacitor between each VL1 to VL4 pin and the GND pin as needed. The reference capacitance is about 0.47 μF, but it depends on the LCD panel used, the number of segment pins, the number of common pins, the frame frequency, and the operating environment. Thoroughly evaluate these values in accordance with your system and adjust the capacitance.

40.6.2 Internal Voltage Boosting Method

The MCU contains an internal voltage boost circuit for generating LCD drive power supplies. The internal voltage boost circuit and external capacitors (0.47 μF ± 30%) are used to generate an LCD drive voltage. Only 1/3 bias mode or 1/4 bias mode can be set for VL1 reference mode of internal voltage boosting method. Only 1/3 bias mode can be set for VL2 reference mode of internal voltage boosting method.

The internal voltage boost circuit can supply a constant voltage, regardless of changes in VCC, because it is a power supply separate from the main unit. In addition, the contrast can be adjusted using the LCD Boost Level Control Register (VLCD).

Table 40.12 LCD drive voltages using the internal voltage boosting method

LCD drive voltage pin	1/3 bias method		1/4 bias method
	VL1 reference	VL2 reference	VL1 reference
VL4	3 × VL1	3/2 × VL2	4 × VL1
VL3	—	—	3 × VL1
VL2	2 × VL1	LCD reference voltage	2 × VL1
VL1	LCD reference voltage	1/2 × VL2	LCD reference voltage

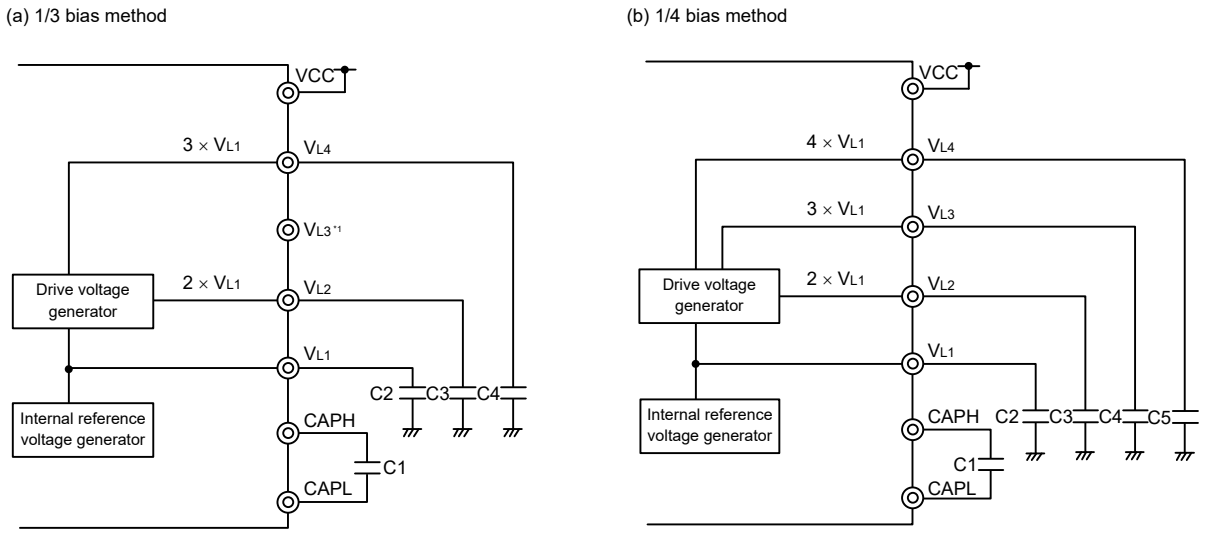

Note: Use a capacitor with as little leakage as possible. In addition, make C1 a non-polar capacitor.
Note 1. VL3 can be used as a port.

Figure 40.12 Examples of LCD drive power connections using VL1 reference mode of internal voltage boosting method

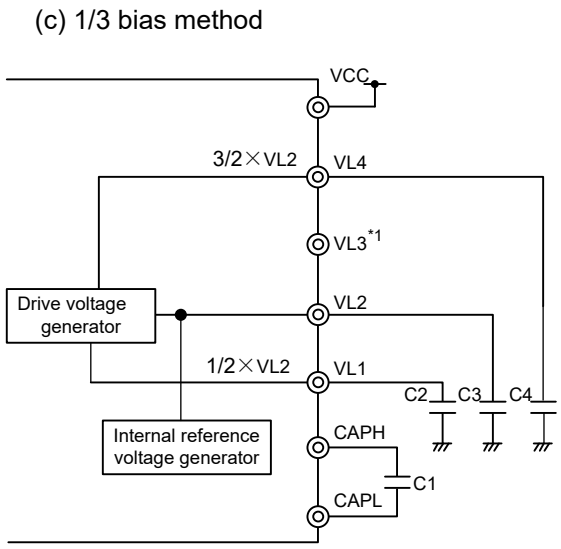

Note: Use a capacitor with as little leakage as possible. In addition, make C1 a non-polar capacitor.
Note 1. VL3 can be used as a port.

Figure 40.13 Examples of LCD drive power connections using VL2 reference mode of internal voltage boosting method

40.6.3 Capacitor Split Method

The MCU contains an internal voltage reduction circuit for generating LCD drive power supplies. The internal voltage reduction circuit and external capacitors (0.47 μF ± 30%) are used to generate an LCD drive voltage. Only 1/3 bias mode can be set for VCC reference mode and VL4 reference mode of capacitor split method.

Unlike the external resistance division method, the capacitor split method does not require continuous current flow, and therefore the current consumption can be reduced.

Table 40.13 LCD drive voltages using capacitor split method

LCD drive voltage pin	1/3 bias method	
	VCC reference	VL4 reference
VL4	VCC	LCD reference voltage
VL3	—	—
VL2	2/3 × VL4	2/3 × VL4
VL1	1/3 × VL4	1/3 × VL4

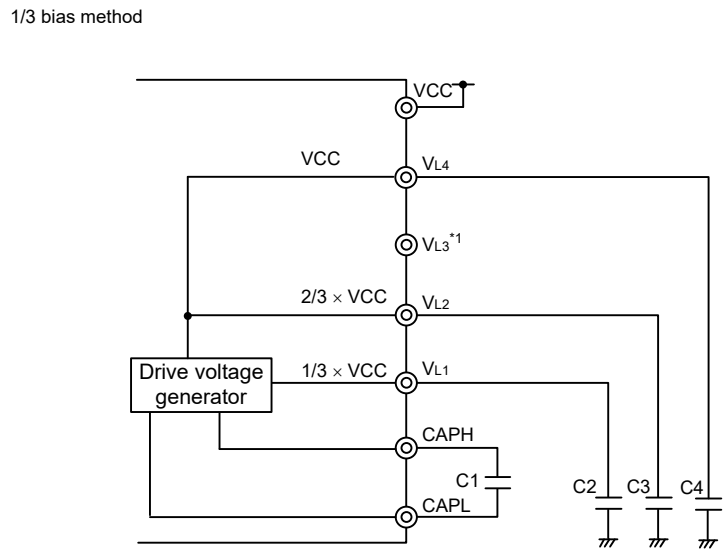

Note: Use a capacitor with less leakage current. In addition, make C1 a non-polar capacitor.
Note 1. VL3 can be used as a port.

Figure 40.14 Examples of LCD drive power connections using VCC reference mode of capacitor split method

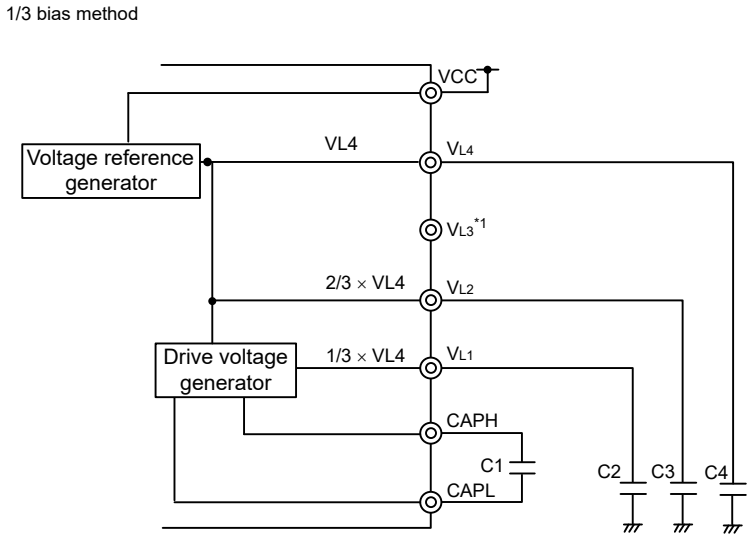

Note: Use a capacitor with less leakage current. In addition, make C1 a non-polar capacitor.
Note 1. VL3 can be used as a port.

Figure 40.15 Examples of LCD drive power connections using VL4 reference mode of capacitor split method

40.7 Common and Segment Signals

Each pixel of an LCD panel turns on when the potential difference between the corresponding common and segment signals becomes higher than a specific voltage (LCD drive voltage, VLCD). The pixels turn off when the potential difference becomes lower than VLCD.

Applying DC voltage to the common and segment signals of an LCD panel causes deterioration. To avoid this problem, the SLCDC is driven by AC voltage.

(1) Common signals

Each common signal is selected sequentially according to a specified number of time slices listed in Figure 40.16. In the static display mode, the same signal is output to COM0 to COM3.

In the two-time-slice mode, leave the COM2 and COM3 pins open. In the three-time-slice mode, leave the COM3 pin open.

Use the COM4 to COM7 pins other than in the six-time-slice mode and eight-time-slice mode, and COM6, COM7 pins in the six-time-slice mode as open or segment pins.

COM Signal Number of Time Slices	COM0	COM1	COM2	COM3	COM4	COM5	COM6	COM7
Static display mode					*1	*1	*1	*1
Two-time-slice mode			Open	Open	*1	*1	*1	*1
Three-time slot mode				Open	*1	*1	*1	*1
Four-time slot mode					*1	*1	*1	*1
Six-time-slice mode							*1	*1
Eight-time-slice mode								

Note 1. Use the pins as open or segment pins.

Figure 40.16 COM signals

(2) Segment signals

Segment signals are signals that correspond to the LCD Display Data register (see section 40.2.5. LCD Display Data Registers).

When the number of time slices is 8, bit [0] to bit [7] of each Display Data register are read in synchronization with COM0 to COM7, respectively. When the number of time slices is 6, bit [0] to bit [5] of each Display Data register are read in synchronization with COM0 to COM5, respectively. If a bit is 1, it is converted to the select voltage, and if the bit is 0, it is converted to the deselect voltage. The conversion results are output to the segment pins.

When the number of time slices is not 8 or 6, bit [0] to bit [3] of each byte in A-pattern area are read in synchronization with COM0 to COM3, and bit [4] to bit [7] of each byte in B-pattern area are read in synchronization with COM0 to COM3, respectively. If a bit is 1, it is converted to the select voltage, and if the bit is 0, it is converted to the deselect voltage. The conversion results are output to the segment pins.

Check what combination of front-surface electrodes (associated with the segment signals) and rear-surface electrodes (associated with the common signals) forms the display patterns in the LCD Display Data register, then write the bit data associated with the desired display pattern on a one-to-one basis.

(3) Output waveforms of common and segment signals

The voltages listed in Table 40.14 are output as common and segment signals.

When both common and segment signals are at the select voltage, display on-voltage is ±VLCD. Other combinations of the signals correspond to display off-voltage.

Table 40.14 LCD drive voltage (static display mode)

	Segment signal	
	Select signal level	**Deselect signal level**
Common signal	**VSS/VL4**	**VL4/VSS**
VL4/VSS	-VLCD/+VLCD	0 V/0 V

Table 40.15 LCD drive voltage (1/2 bias method)

		Segment signal	
		Select signal level	**Deselect signal level**
Common signal		**VSS/VL4**	**VL4/VSS**
Select signal level	VL4/VSS	-VLCD/+VLCD	0 V/0 V
Deselect signal level	VL2	−1/2 VLCD/+1/2 VLCD	+1/2 VLCD/−1/2 VLCD

Table 40.16 LCD drive voltage ((1/3 bias method (waveform A or B))

		Segment signal	
		Select signal level	**Deselect signal level**
Common signal		**VSS/VL4**	**VL2/VL1**
Select signal level	VL4/VSS	−VLCD/+VLCD	−1/3 VLCD/+1/3 VLCD
Deselect signal level	VL1/VL2	−1/3 VLCD/+1/3 VLCD	+1/3 VLCD/−1/3 VLCD

Table 40.17 LCD drive voltage (1/4 bias method (waveform A or B))

		Segment signal	
		Select signal level	**Deselect signal level**
Common signal		**VSS/VL4**	**VL2**
Select signal level	VL4/VSS	−VLCD/+VLCD	−1/2 VLCD/+1/2 VLCD
Deselect signal level	VL1/VL3	−1/4 VLCD/+1/4 VLCD	+1/4 VLCD/−1/4 VLCD

Figure 40.17 and Figure 40.18 show the common signal waveforms. Figure 40.19 to Figure 40.21 show the voltages and phases of the common and segment signals.

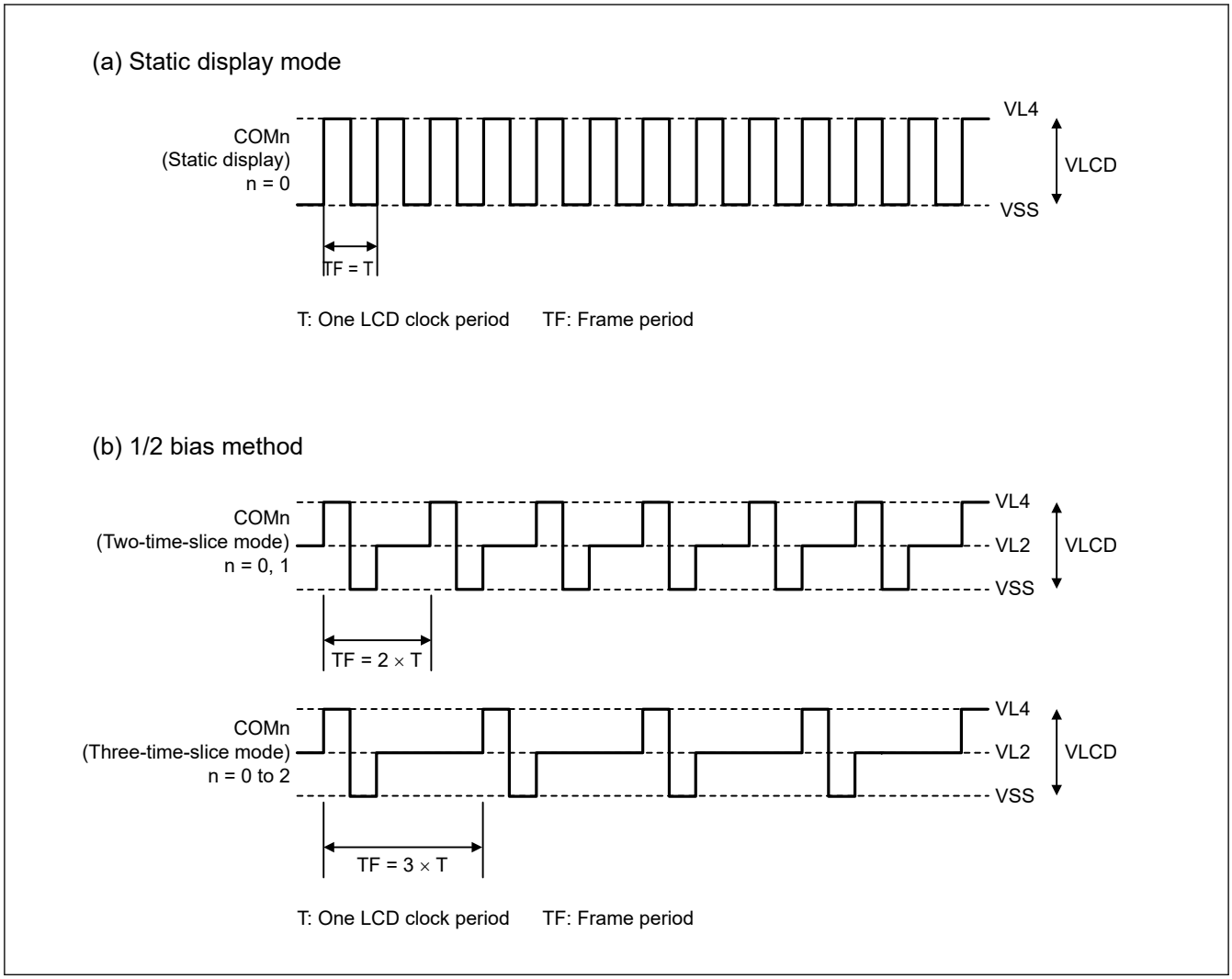

Figure 40.17 Common signal waveforms (1 of 2)

(c) 1/3 bias method

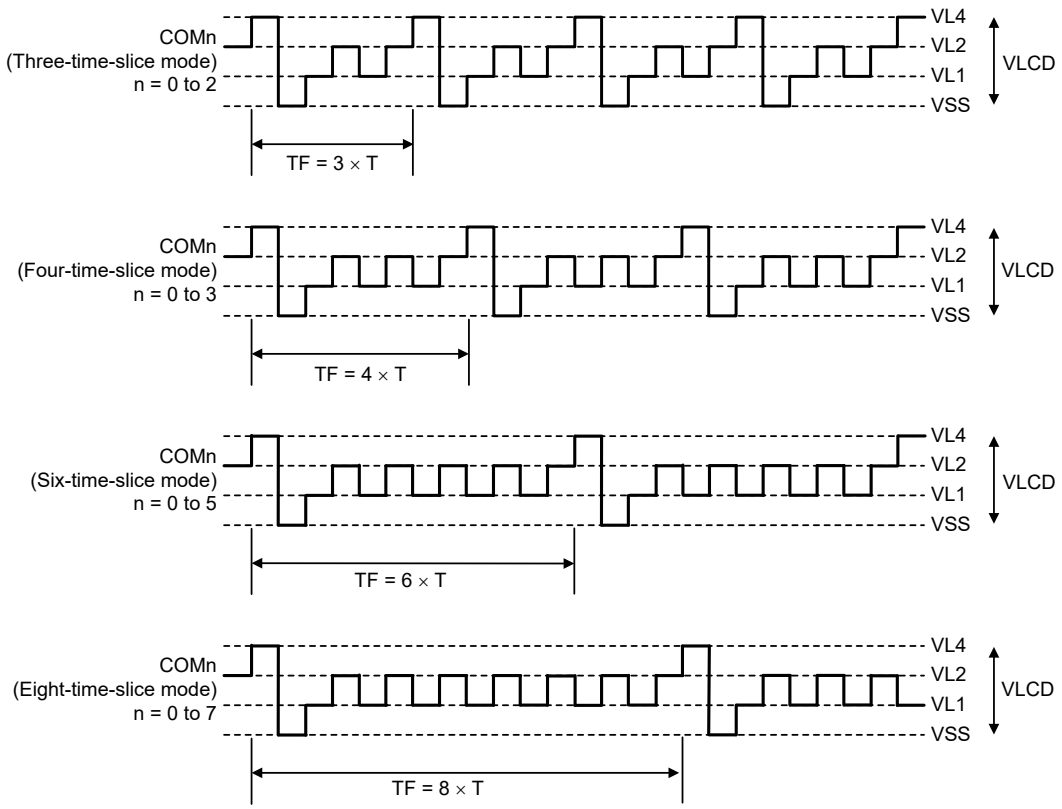

T: One LCD clock period TF: Frame period

< Example of calculation of LCD frame frequency (When four-time slice mode is used) >
LCD clock: $32768/2^7$ = 256 Hz (When setting to LCDC0 register = 06h)
LCD frame frequency: 64 Hz

(d) 1/4 bias method

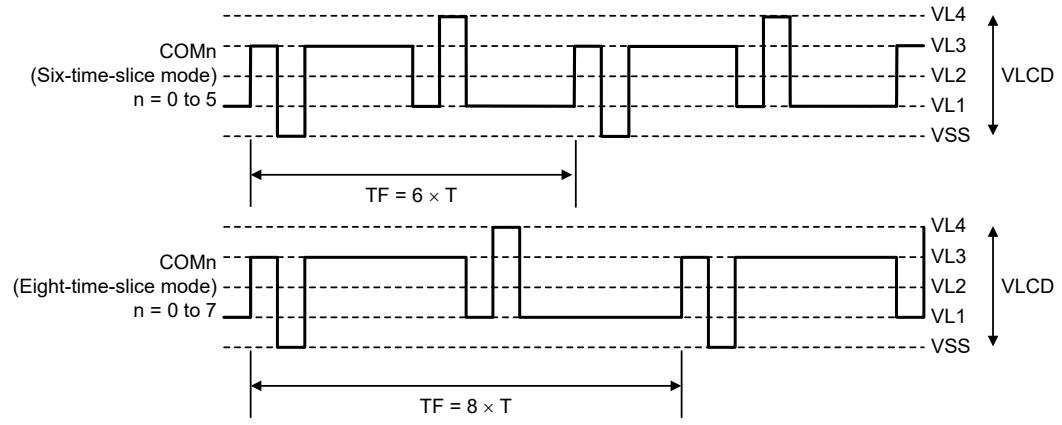

T: One LCD clock period TF: Frame period

< Example of calculation of LCD frame frequency (When eight-time slice mode is used) >
LCD clock: $32768/2^7$ = 256 Hz (When setting to LCDC0 register = 06h)
LCD frame frequency: 32 Hz

Figure 40.18 Common signal waveforms (2 of 2)

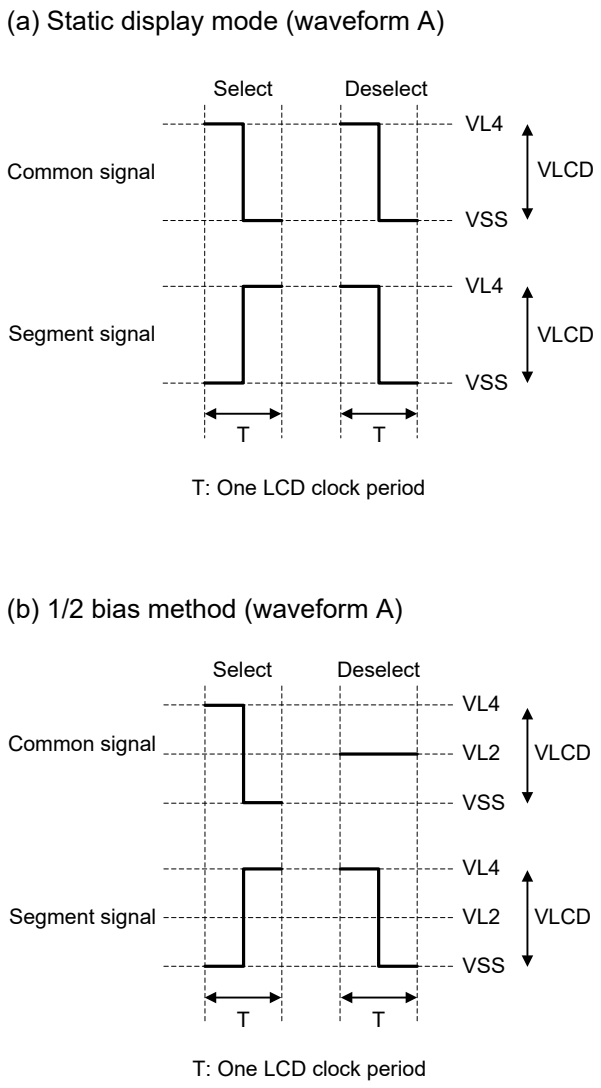

Figure 40.19 Voltages and phases of common and segment signals (1 of 3)

(c) 1/3 bias method (waveform A)

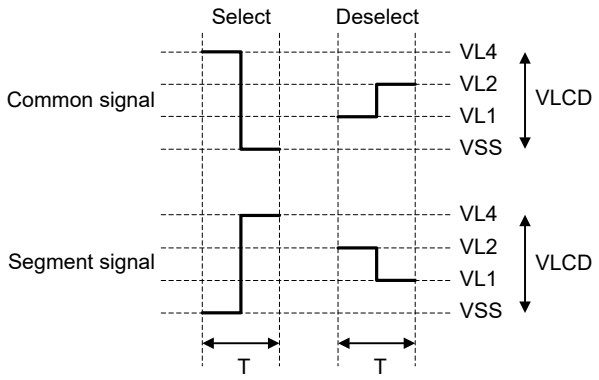

T: One LCD clock period

(d) 1/3 bias method (waveform B)

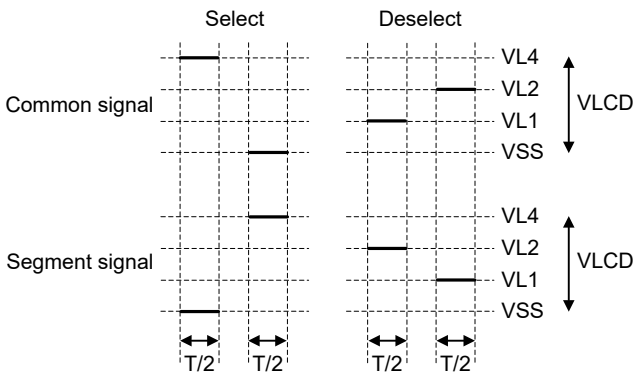

T: One LCD clock period

Figure 40.20 Voltages and phases of common and segment signals (2 of 3)

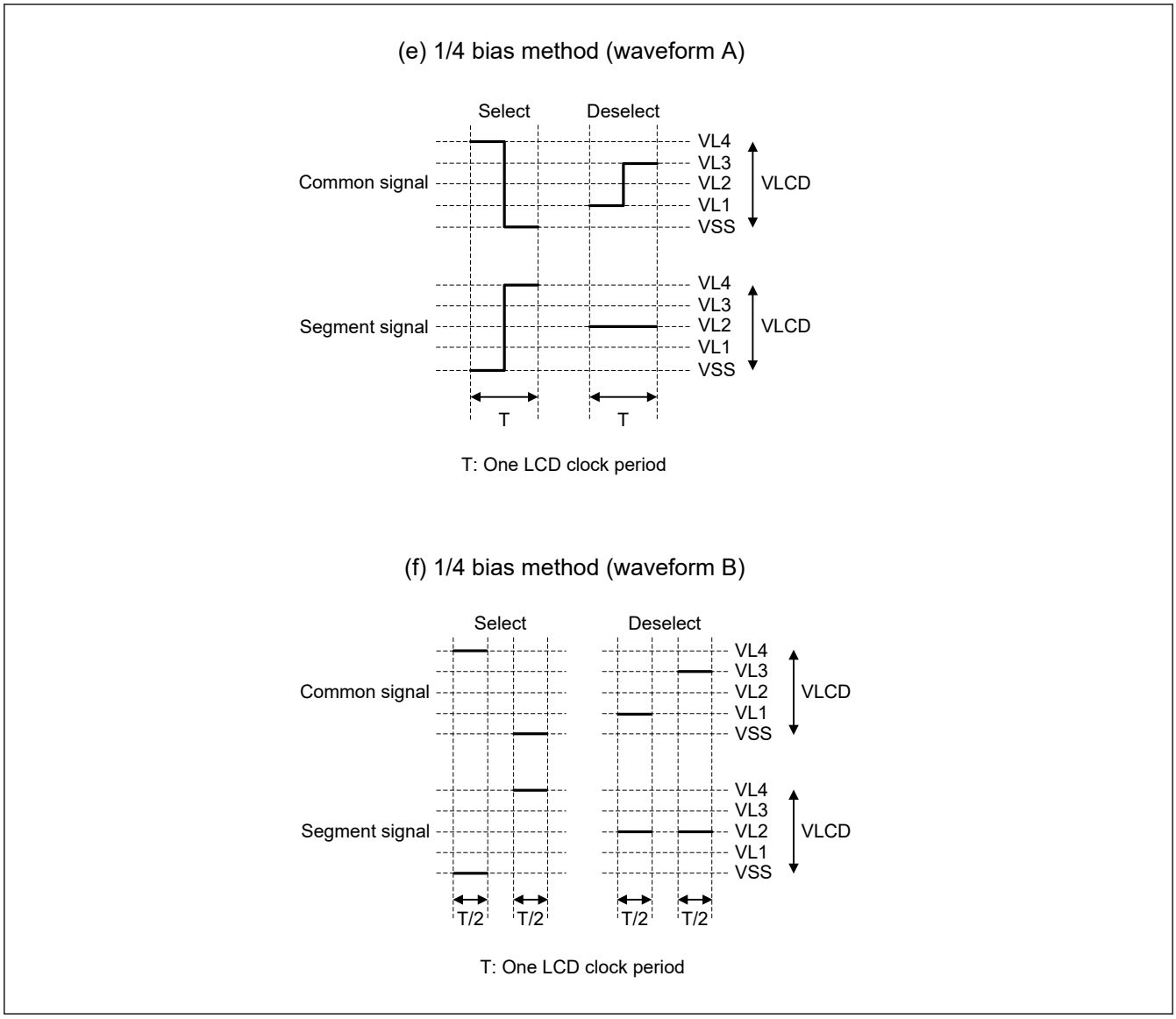

Figure 40.21 Voltages and phases of common and segment signals (3 of 3)

40.8 Display Modes

40.8.1 Static Display Example

Figure 40.23 shows how a 3-digit LCD panel with the display pattern shown in Figure 40.22 is connected to the segment signals (SEG0 to SEG23) and the common signal (COM0). This example displays “12.3” in the LCD panel. The content of the Display Data register corresponds to this display.

The following description focuses on numeral “2.” displayed in the second digit. To display “2.” in the LCD panel, the select or deselect voltage must be applied to SEG8 to SEG15 pins at the select timing of the common signal COM0. See Figure 40.22 for the relationship between the segment signals and LCD segments.

Table 40.18 Example of select (1) and deselect (0) data (COM0)

Common	Segment							
	SEG8	**SEG9**	**SEG10**	**SEG11**	**SEG12**	**SEG13**	**SEG14**	**SEG15**
COM0	Select	Deselect	Select	Select	Deselect	Select	Select	Select

As shown in Table 40.18, bit-0 pattern of the Display Data register must be 10110111b.

Figure 40.24 shows the LCD drive waveforms of SEG11, SEG12, and COM0. When the select voltage is applied to SEG11 at the COM0 timing, an alternating rectangle waveform, +VLCD/-VLCD, is generated to turn on the associated LCD segment.

COM1 to COM3 are supplied with the same waveform as COM0. Therefore, COM0 to COM3 can be connected together to increase the drive capacity.

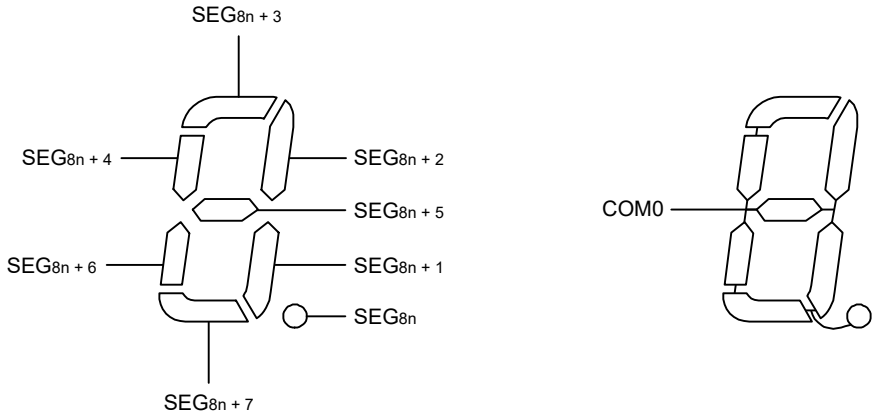

Figure 40.22 Static LCD display pattern and electrode connections

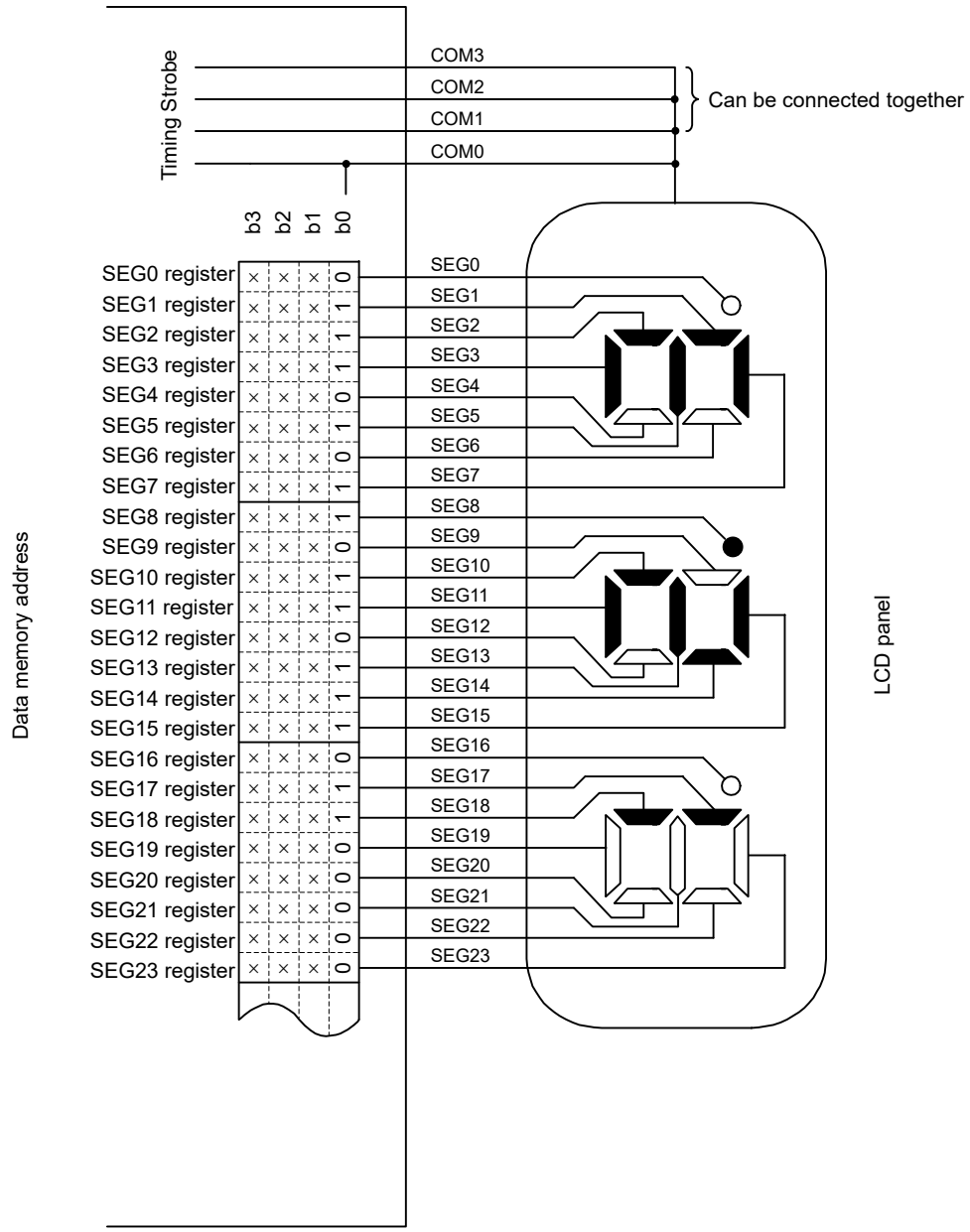

Note: x: Don't care

Figure 40.23 Example of connecting static LCD panel

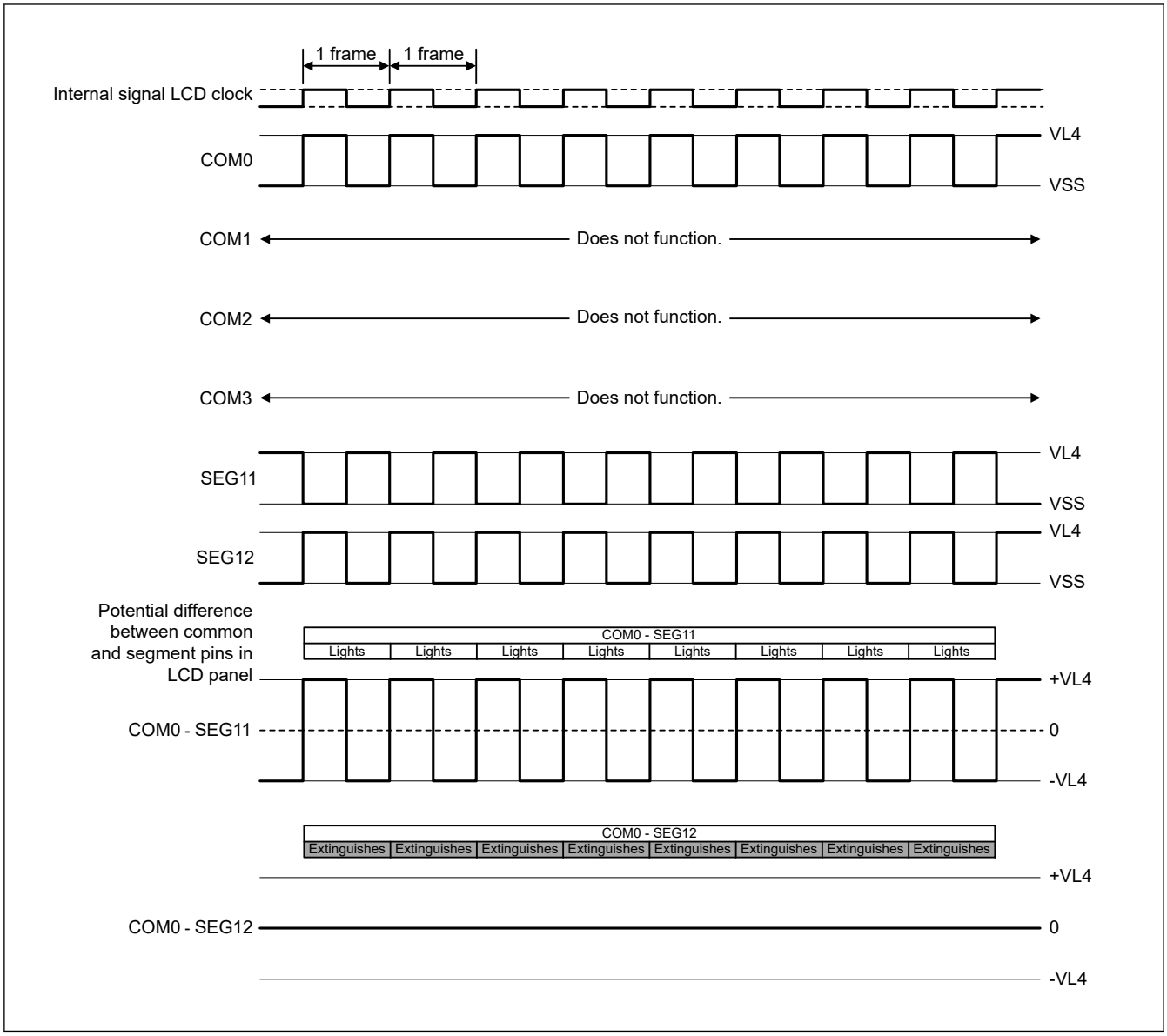

Figure 40.24 Static LCD drive waveform examples for SEG11, SEG12, and COM0

40.8.2 Two-Time Slice Display Example

Figure 40.26 shows how a 6-digit LCD panel with the display pattern shown in Figure 40.25 is connected to the segment signals (SEG0 to SEG23) and the common signals (COM0 and COM1). This example displays “12345.6” in the LCD panel. The content of the Display Data register corresponds to this display.

The following description is for numeral “3” displayed in the fourth digit. To display “3” in the LCD panel, the select or deselect voltage must be applied to the SEG12 to SEG15 pins at the select timing of the COM0 and COM1 common signals. See Figure 40.25 for the relationship between the segment signals and LCD segments.

Table 40.19 Example of select (1) and deselect (0) data (COM0 and COM1)

Common	Segment			
	SEG12	SEG13	SEG14	SEG15
COM0	Select	Select	Deselect	Deselect
COM1	Deselect	Select	Select	Select

As shown in Table 40.19, the Display Data register location that corresponds to SEG15 must contain xx10b.

Figure 40.27 shows examples of LCD drive waveforms between SEG15 signal and each common signal. When the select voltage is applied to SEG15 at the timing of COM1, an alternating rectangle waveform, +VLCD/−VLCD, is generated to turn on the associated LCD segment.

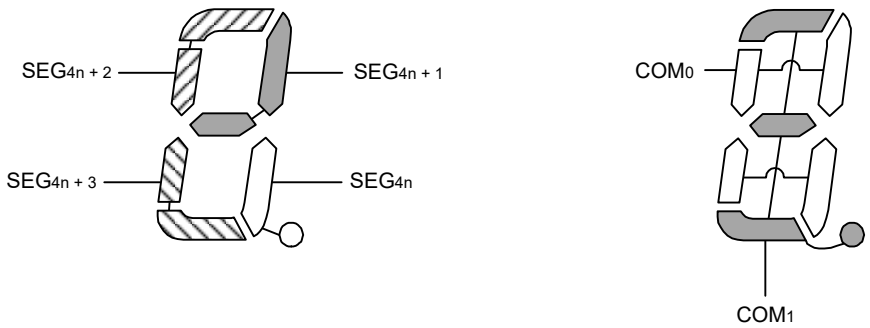

Figure 40.25 Two-time slice LCD display pattern and electrode connections

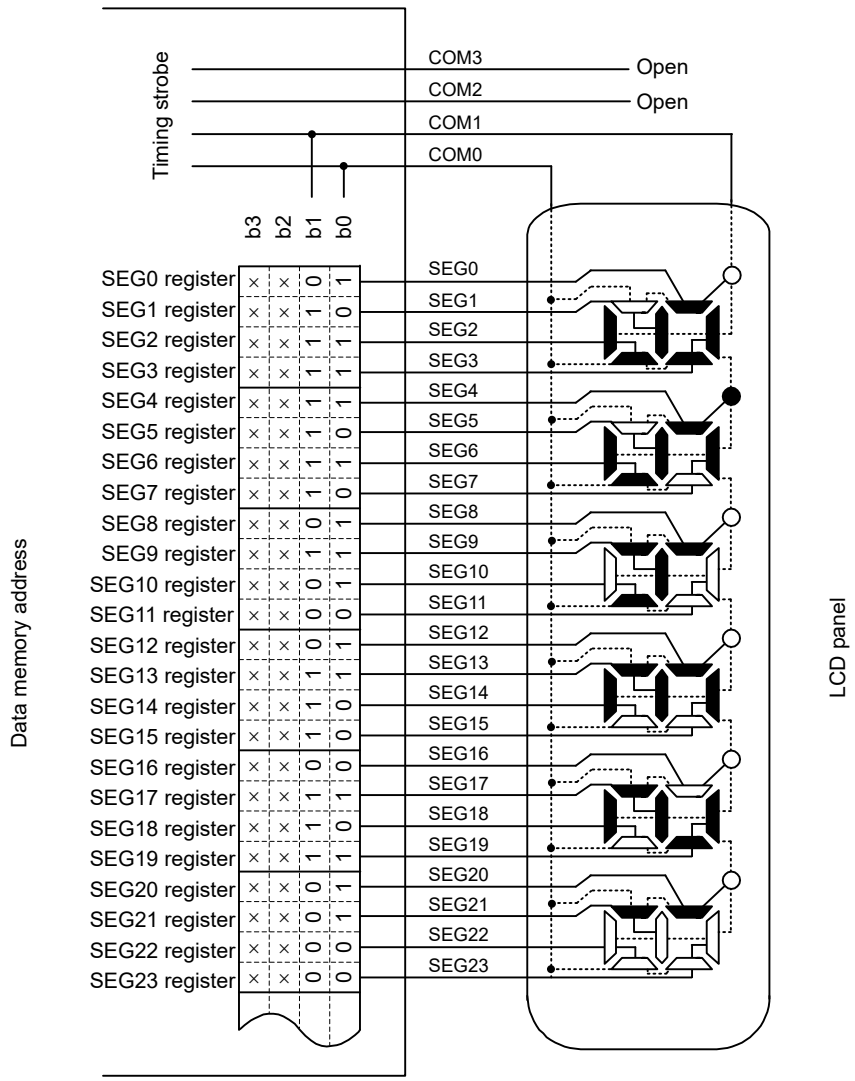

Note: x: Don't care

Figure 40.26 Example of connecting two-time slice LCD panel

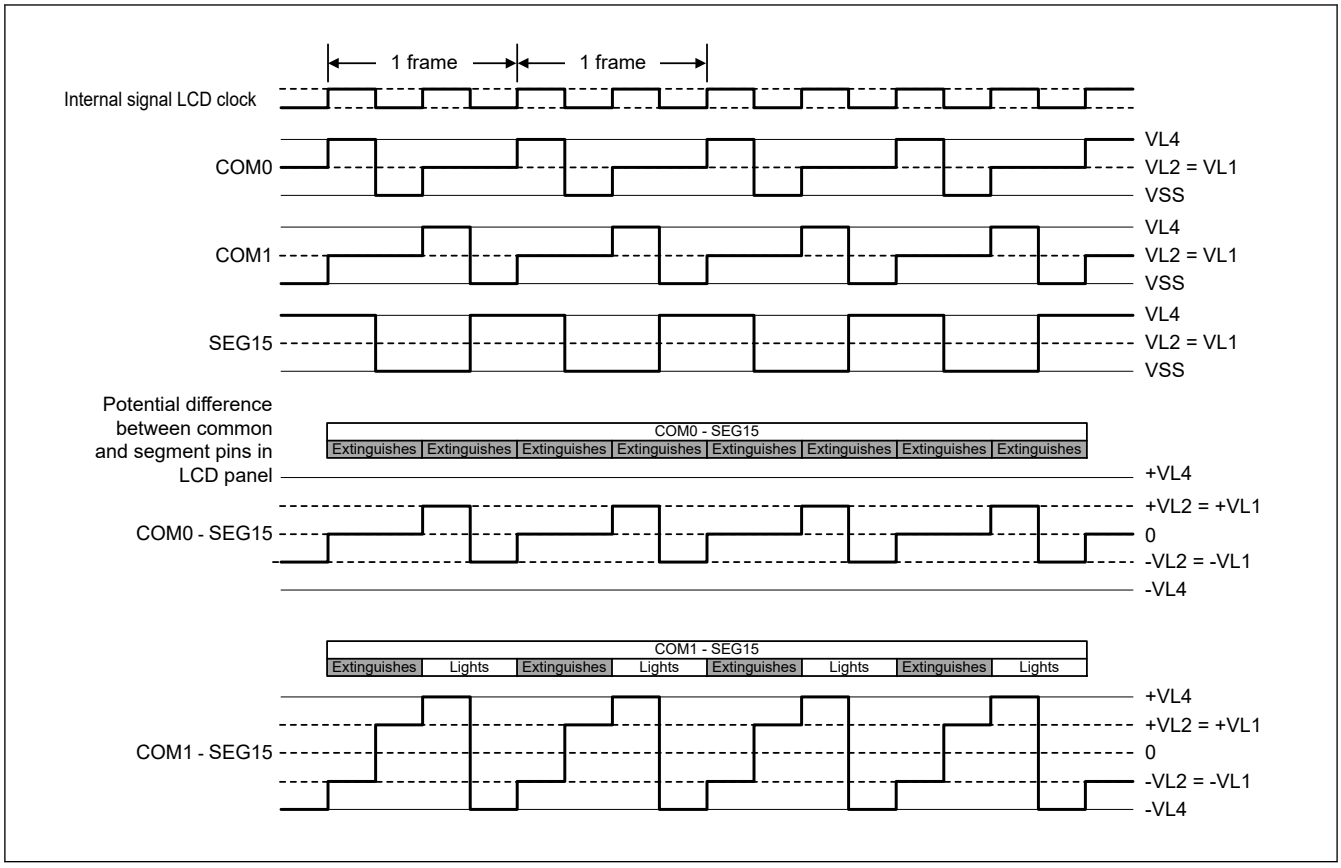

Figure 40.27 Two-time slice LCD drive waveform examples between SEG15 and each common signal using 1/2 bias method

40.8.3 Three-Time Slice Display Example

Figure 40.29 shows how an 8-digit LCD panel with the display pattern shown in Figure 40.28 is connected to the segment signals (SEG0 to SEG23) and the common signals (COM0 to COM2). This example displays “123456.78” in the LCD panel. The content of the Display Data register corresponds to this display.

The following description focuses on numeral “6.” displayed in the third digit. To display “6.” in the LCD panel, the select or deselect voltage must be applied to the SEG6 to SEG8 pins at the select timing of COM0 to COM2 common signals. See Figure 40.28 for the relationship between the segment signals and LCD segments.

Table 40.20 Example of select (1) and deselect (0) data (COM0 to COM2)

Common	Segment		
	SEG6	SEG7	SEG8
COM0	Deselect	Select	Select
COM1	Select	Select	Select
COM2	Select	Select	—

As shown in Table 40.20, the Display Data register location that corresponds to SEG6 must contain x110b.

Figure 40.30 and Figure 40.31 show examples of LCD drive waveforms between SEG6 signal and each common signal in the 1/2 and 1/3 bias methods, respectively. When the select voltage is applied to SEG6 at the COM1 or COM2 timing, an alternating rectangle waveform, +VLCD/−VLCD, is generated to turn on the associated LCD segment.

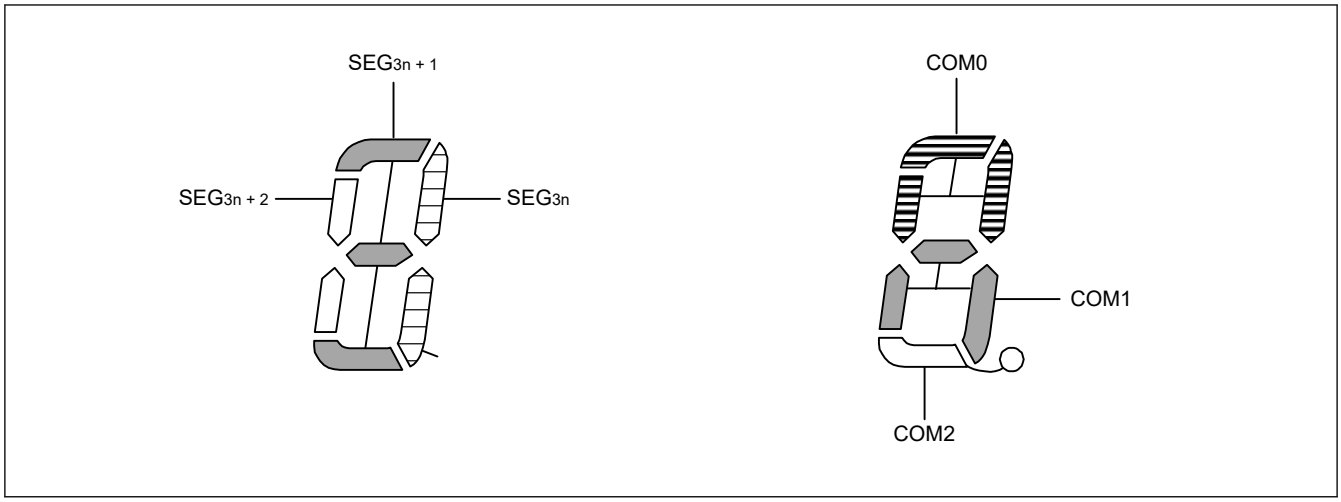

Figure 40.28 Three-time slice LCD display pattern and electrode connections

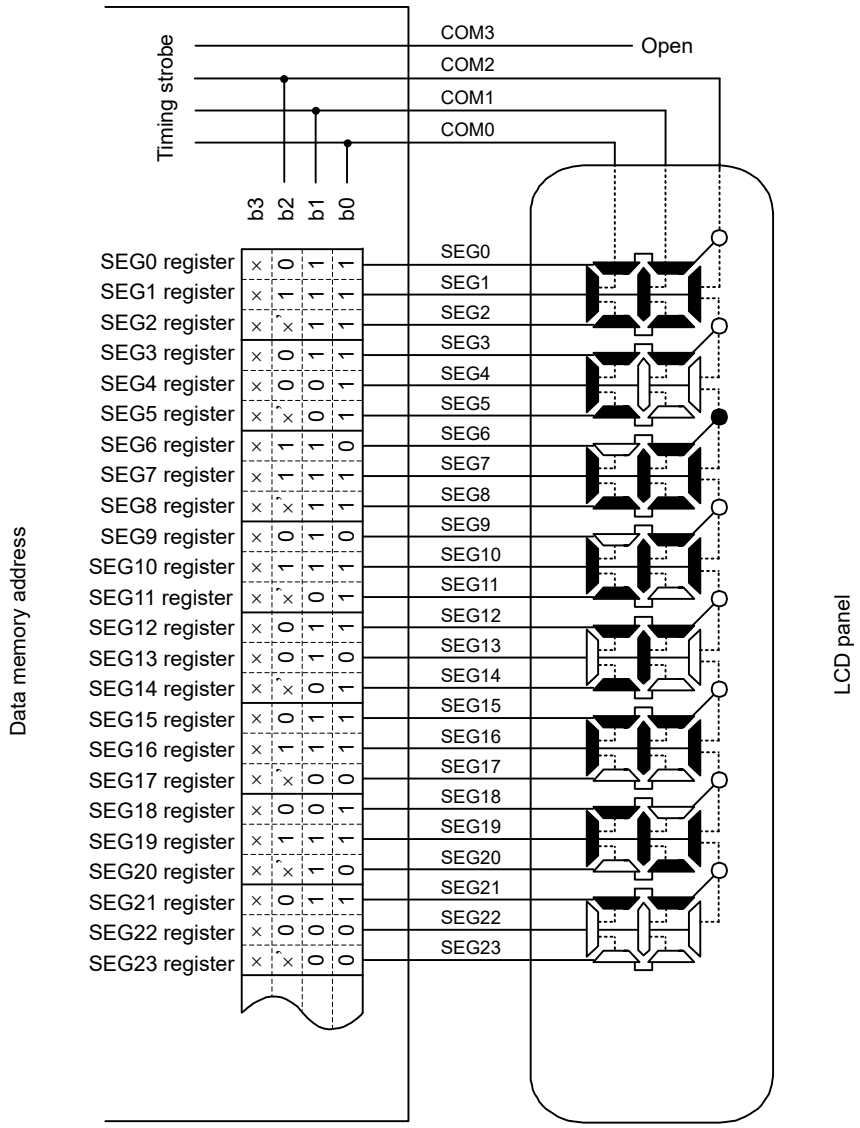

Note: x: Don't care
x': Can be used to store any data because there is no corresponding segment in the LCD panel.

Figure 40.29 Example of connecting three-time slice LCD panel

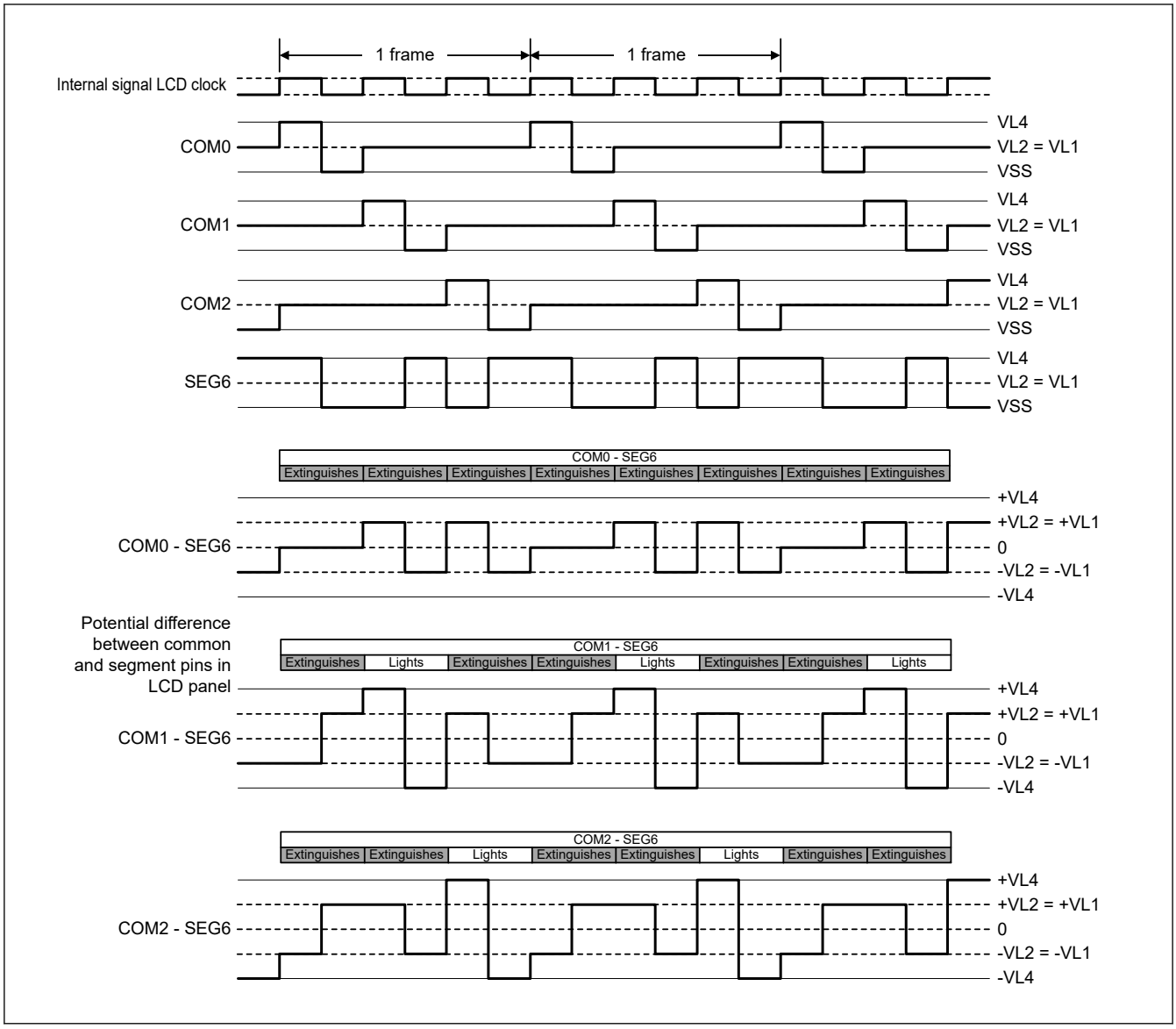

Figure 40.30 Three-time slice LCD drive waveform examples between SEG6 and each common signal using 1/2 bias method

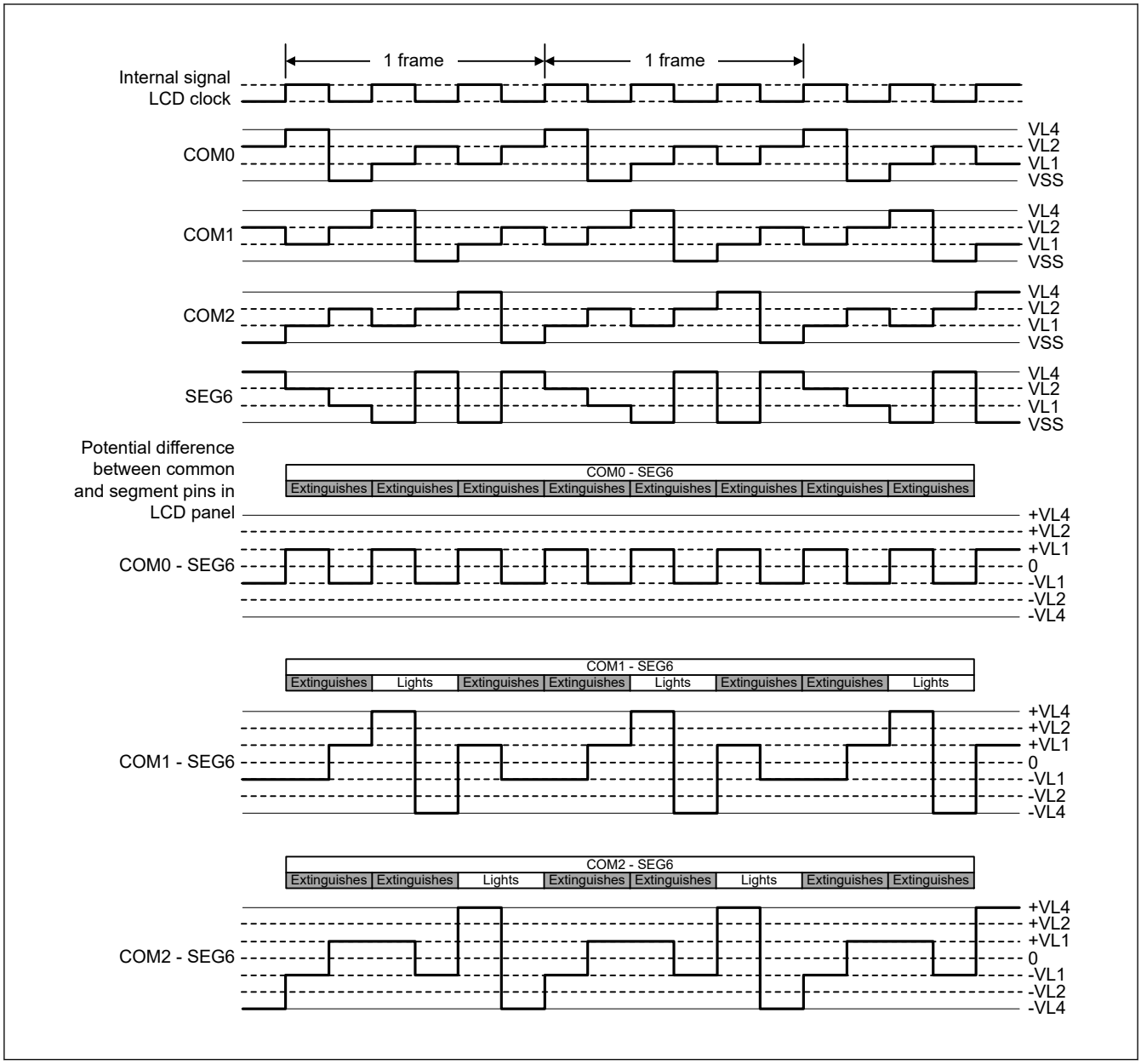

Figure 40.31 Three-time slice LCD drive waveform examples between SEG6 and each common signal using 1/3 bias method

40.8.4 Four-Time Slice Display Example

Figure 40.33 shows how a 12-digit LCD panel with the display pattern shown in Figure 40.32 is connected to the segment signals (SEG0 to SEG23) and the common signals (COM0 to COM3). This example displays “123456.789012” in the LCD panel. The content of the Display Data register corresponds to this display.

The following description focuses on numeral “6.” displayed in the seventh digit. To display “6.” in the LCD panel, the select or deselect voltage must be applied to the SEG12 and SEG13 pins at the select timing of COM0 to COM3 common signals. See Figure 40.32 for the relationship between the segment signals and LCD segments.

Table 40.21 Example of select (1) and deselect (0) data (COM0 to COM3) (1 of 2)

Common	Segment	
	SEG12	SEG13
COM0	Select	Select
COM1	Deselect	Select

Table 40.21 Example of select (1) and deselect (0) data (COM0 to COM3) (2 of 2)

Common	Segment	
	SEG12	SEG13
COM2	Select	Select
COM3	Select	Select

As shown in Table 40.21, the Display Data register location that corresponds to SEG12 must contain 1101b.

Figure 40.34 to Figure 40.35 show examples of LCD drive waveforms between SEG12 signal and each common signal. When the select voltage is applied to SEG12 at the COM0 timing, an alternating rectangle waveform, +VLCD/−VLCD, is generated to turn on the associated LCD segment.

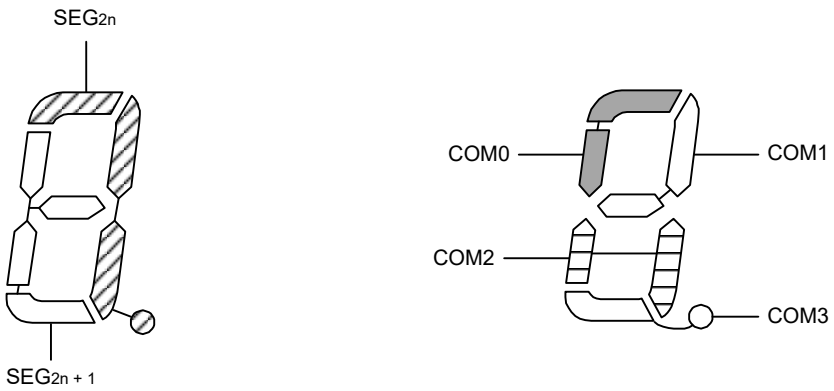

Figure 40.32 Four-time slice LCD display pattern and electrode connections

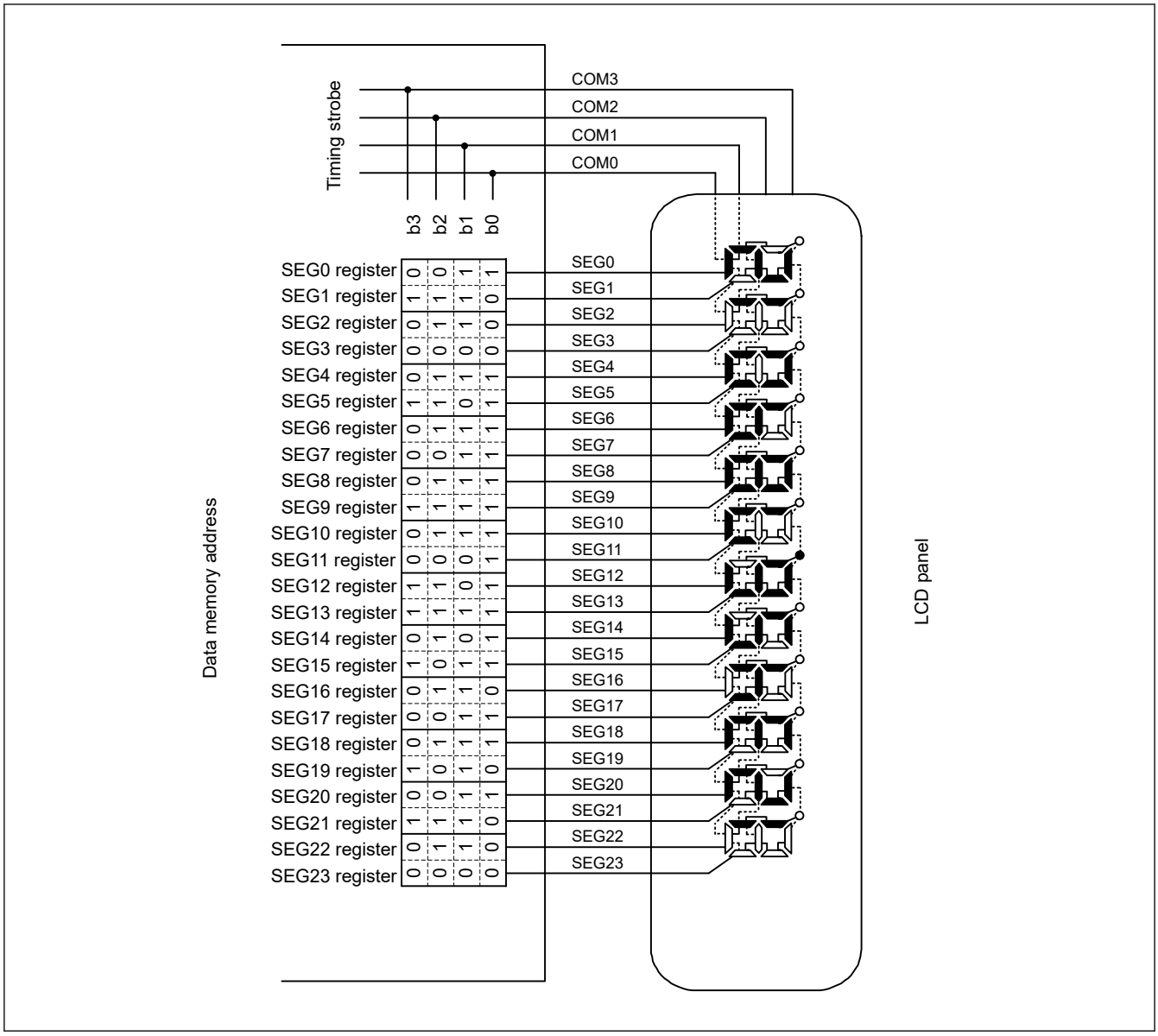

Figure 40.33 Example of connecting four-time slice LCD panel

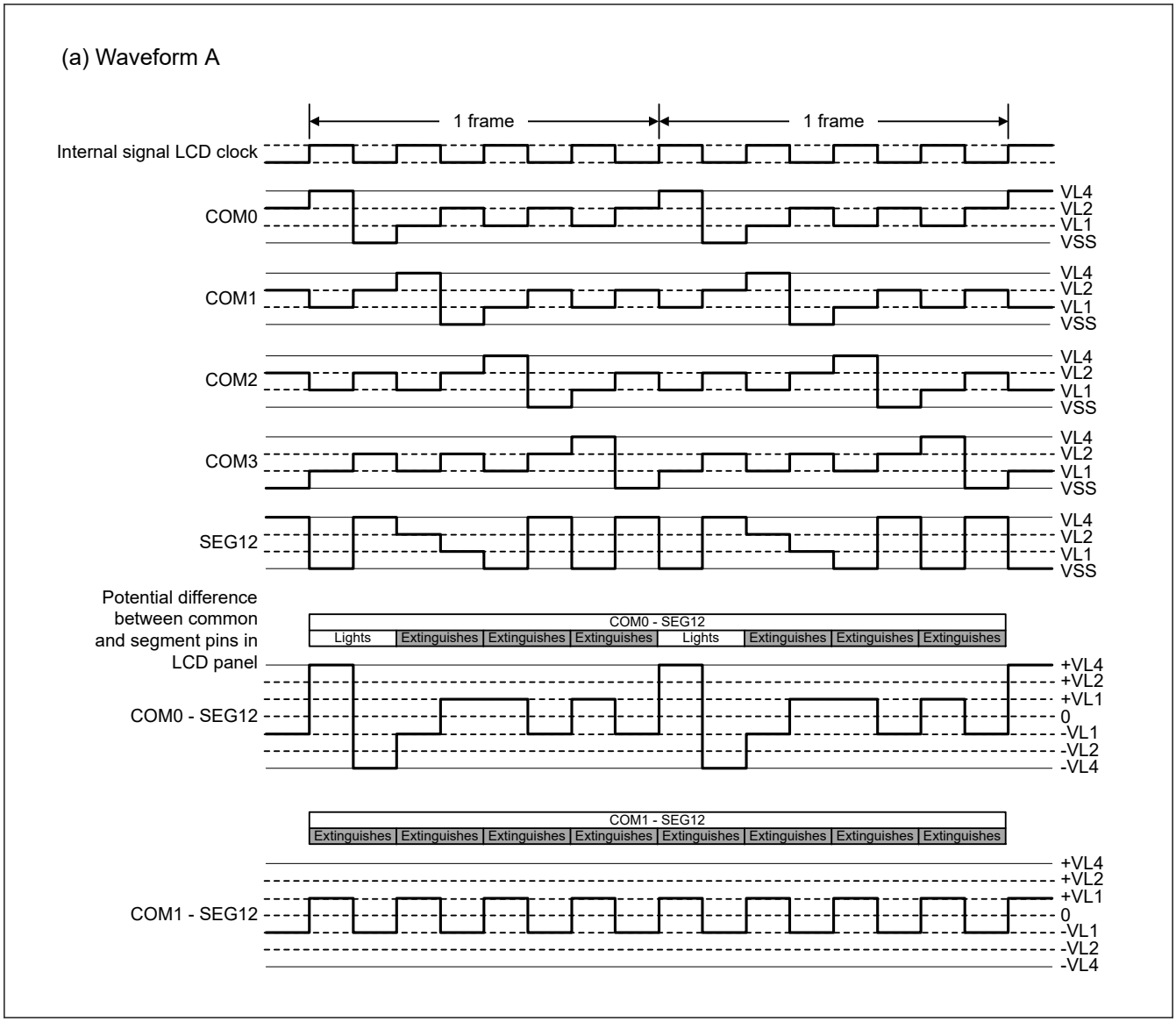

Figure 40.34 Four-time slice LCD drive waveform examples between SEG12 and each common signal using 1/3 bias method (1 of 2)

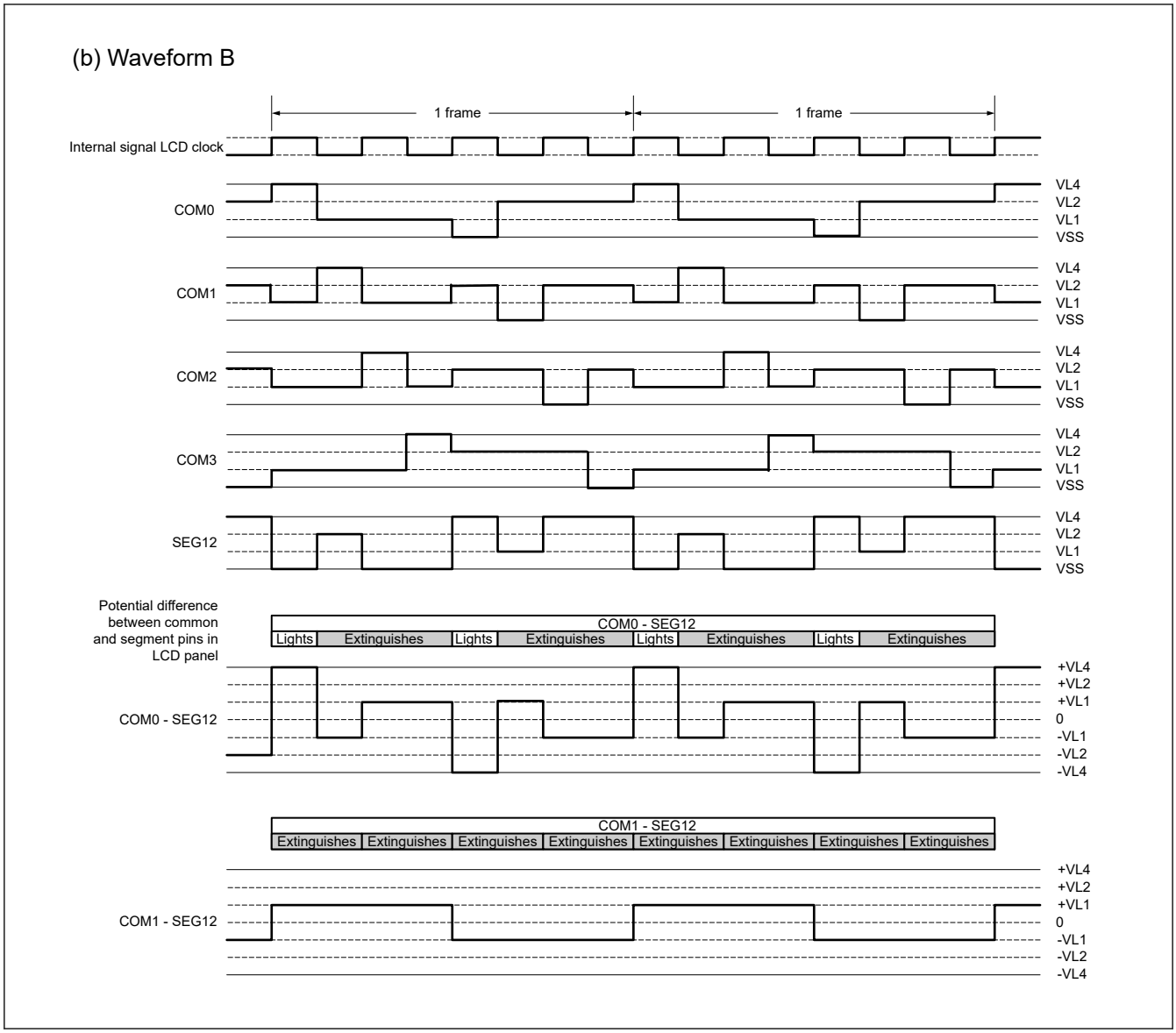

Figure 40.35 Four-time slice LCD drive waveform examples between SEG12 and each common signal using 1/3 bias method (2 of 2)

40.8.5 Six-Time Slice Display Example

Figure 40.37 shows how a 15 × 6 dot LCD panel with the display pattern shown in Figure 40.36 is connected to the segment signals (SEG2 to SEG16) and the common signals (COM0 to COM5). This example displays “123” in the LCD panel. The contents of the display data register correspond to this display.

The following description is for the numeral “3” displayed in the first digit. To display “3” in the LCD panel, the select or deselect voltage must be applied to the SEG2 to SEG6 pins at the select timing of the common signals COM0 to COM5. See Figure 40.36 for the relationship between the segment signals and LCD segments.

Table 40.22 Example of select (1) and deselect (0) data (COM0 to COM5) (1 of 2)

	Segment				
Common	**SEG2**	**SEG3**	**SEG4**	**SEG5**	**SEG6**
COM0	Select	Select	Select	Select	Select
COM1	Deselect	Select	Deselect	Deselect	Deselect
COM2	Deselect	Deselect	Select	Deselect	Deselect
COM3	Deselect	Select	Deselect	Deselect	Deselect

Table 40.22 Example of select (1) and deselect (0) data (COM0 to COM5) (2 of 2)

Common	Segment				
	SEG2	SEG3	SEG4	SEG5	SEG6
COM4	Select	Deselect	Deselect	Deselect	Select
COM5	Deselect	Select	Select	Select	Deselect

As shown in Table 40.22, the Display Data register location that corresponds to SEG2 must contain 010001b.

Figure 40.38 and Figure 40.39 show examples of LCD drive waveforms between SEG2 signal and each common signal. When the select voltage is applied to SEG2 at COM0 timing, a waveform is generated to turn on the associated LCD segment.

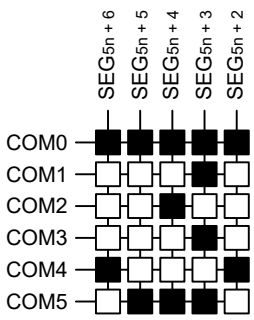

Figure 40.36 Six-time slice LCD display pattern and electrode connections

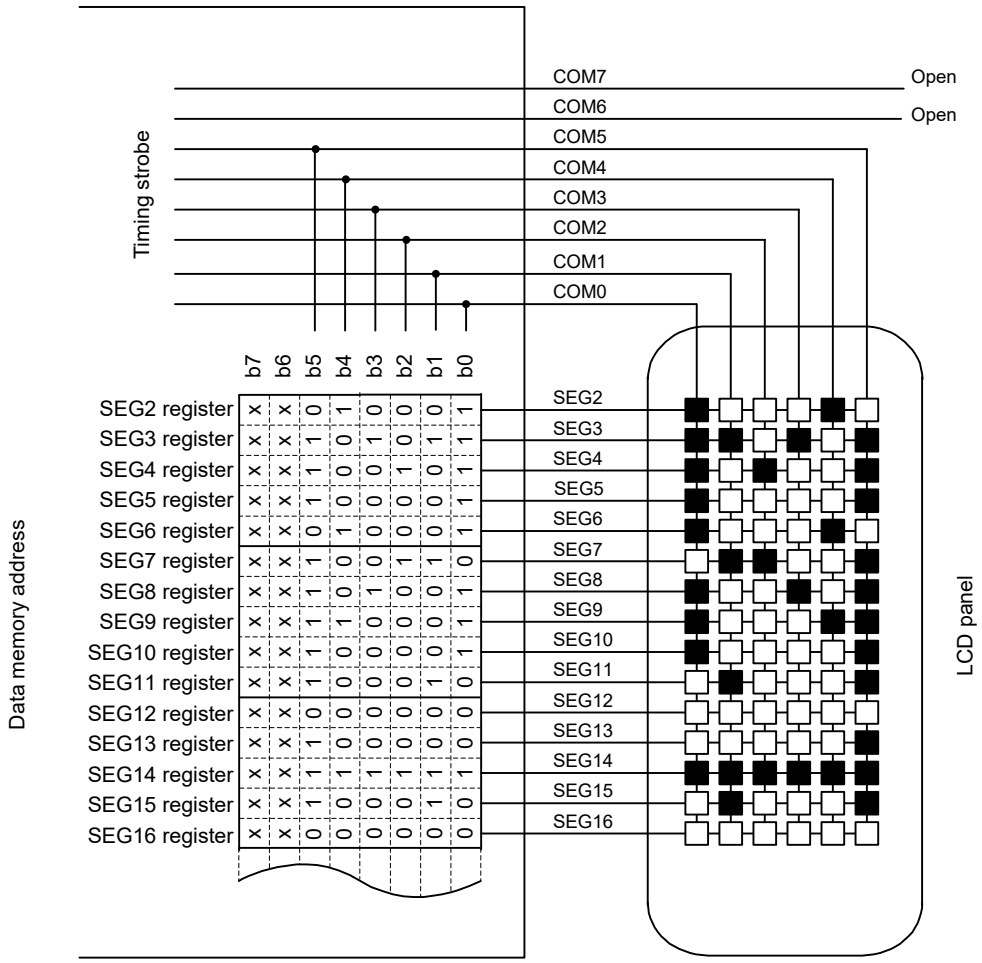

Note: x: Can be used to store any data because there is no corresponding segment in the LCD panel.

Figure 40.37 Example of connecting six-time slice LCD panel

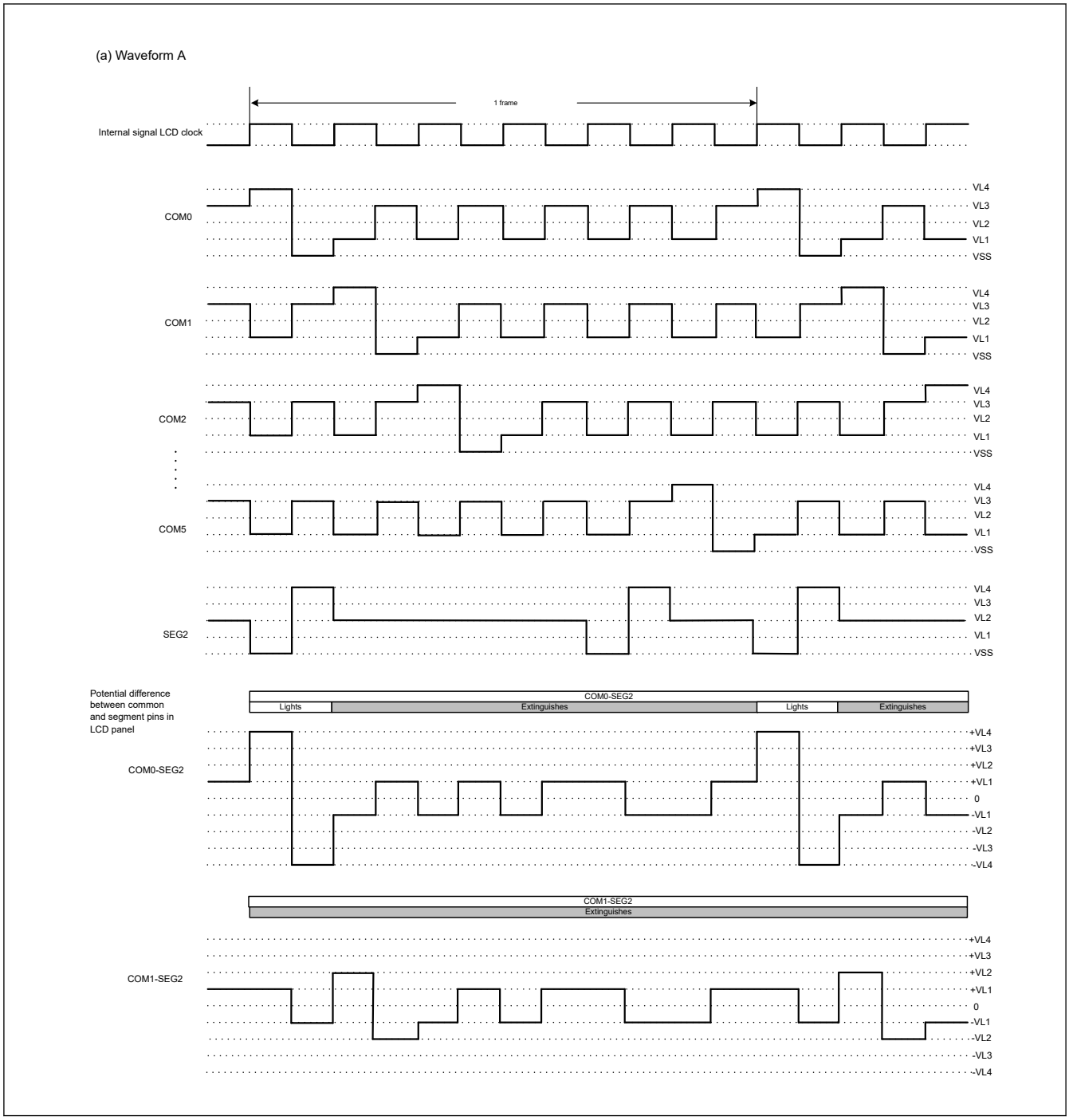

Figure 40.38 Six-time slice LCD drive waveform examples between SEG2 and each common signal using 1/4 bias method

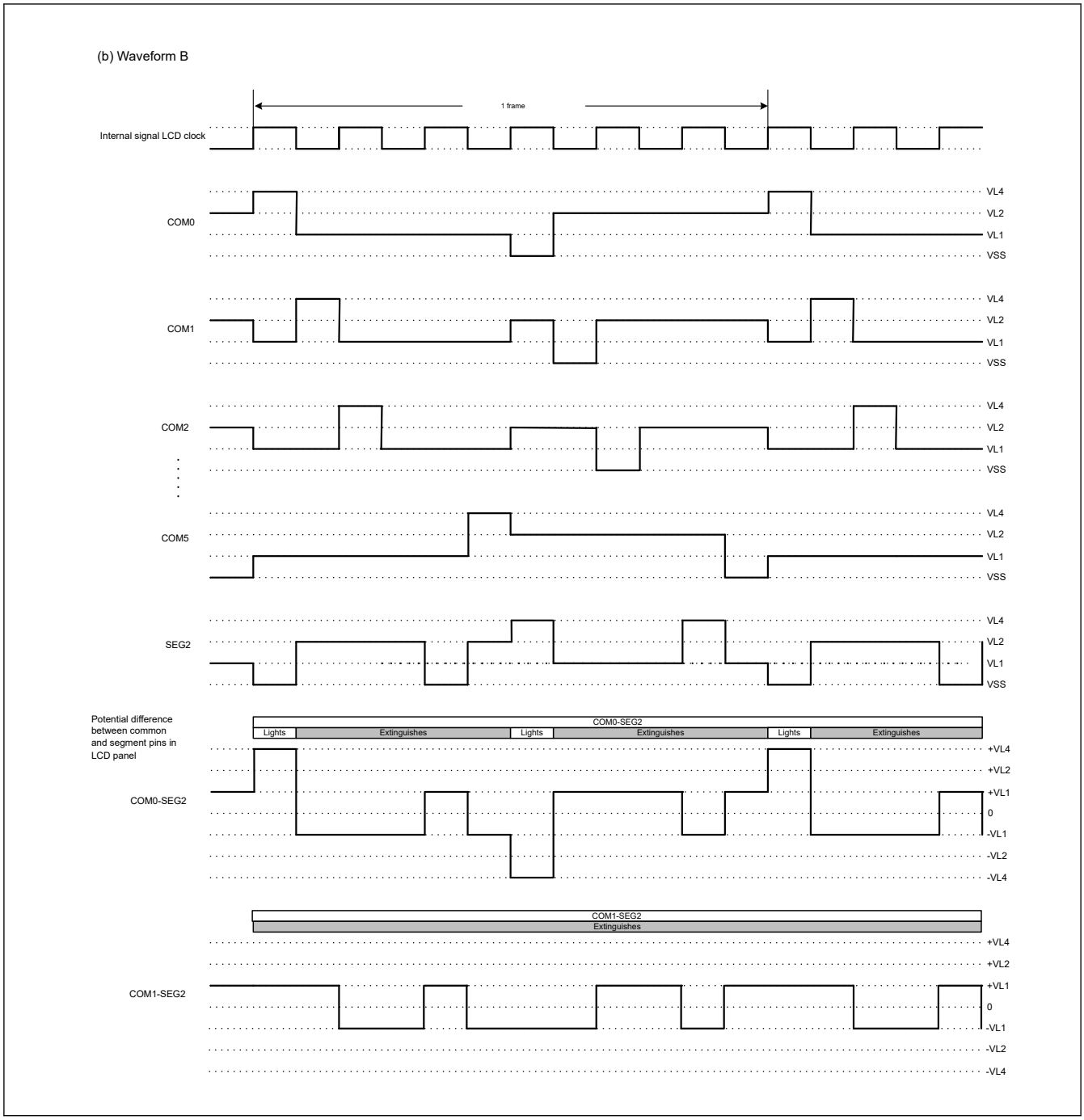

Figure 40.39 Six-time slice LCD drive waveform examples between SEG2 and each common signal using 1/3 bias method

40.8.6 Eight-Time Slice Display Example

Figure 40.41 shows how a 15 × 8 dot LCD panel with the display pattern shown in Figure 40.40 is connected to the segment signals (SEG4 to SEG18) and the common signals (COM0 to COM7). This example displays “123” in the LCD panel. The content of the Display Data register corresponds to this display.

The following description is for the numeral “3” displayed in the first digit. To display “3” in the LCD panel, the select or deselect voltage must be applied to the SEG4 to SEG8 pins at the select timing of COM0 to COM7 common signals. See Figure 40.40 for the relationship between the segment signals and LCD segments.

Table 40.23 Example of select (1) and deselect (0) data (COM0 to COM7)

Common	Segment				
	SEG4	SEG5	SEG6	SEG7	SEG8
COM0	Select	Select	Select	Select	Select
COM1	Deselect	Select	Deselect	Deselect	Deselect
COM2	Deselect	Deselect	Select	Deselect	Deselect
COM3	Deselect	Select	Deselect	Deselect	Deselect
COM4	Select	Deselect	Deselect	Deselect	Deselect
COM5	Select	Deselect	Deselect	Deselect	Select
COM6	Deselect	Select	Select	Select	Deselect
COM7	Deselect	Deselect	Deselect	Deselect	Deselect

As shown in Table 40.23, the Display Data register location that corresponds to SEG4 must contain 00110001b.

Figure 40.42 and Figure 40.43show examples of LCD drive waveforms between SEG4 signal and each common signal. When the select voltage is applied to SEG4 at COM0 timing, a waveform is generated to turn on the associated LCD segment.

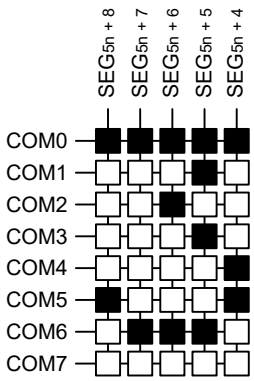

Figure 40.40 Eight-time slice LCD display pattern and electrode connections

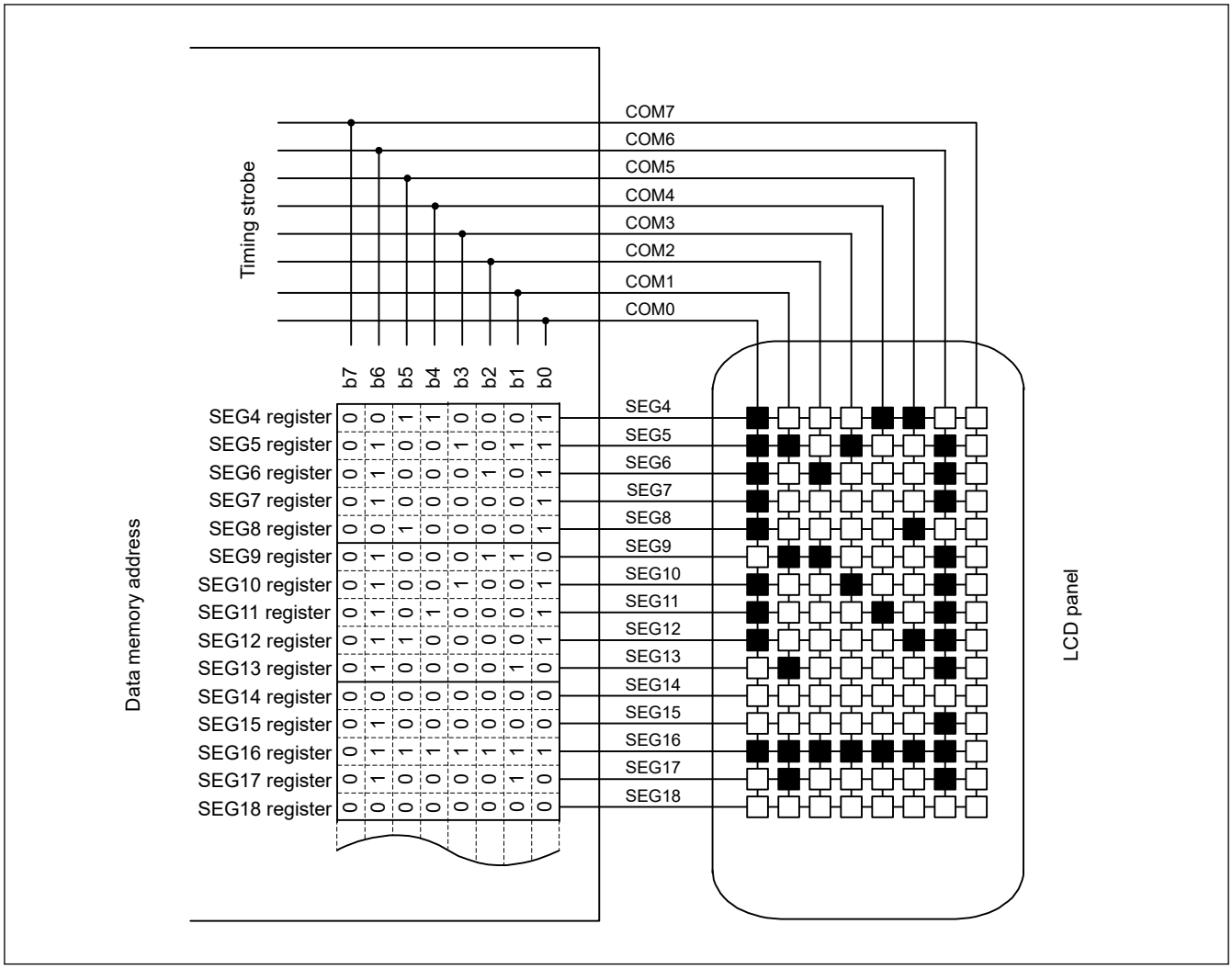

Figure 40.41 Example of connecting eight-time slice LCD panel

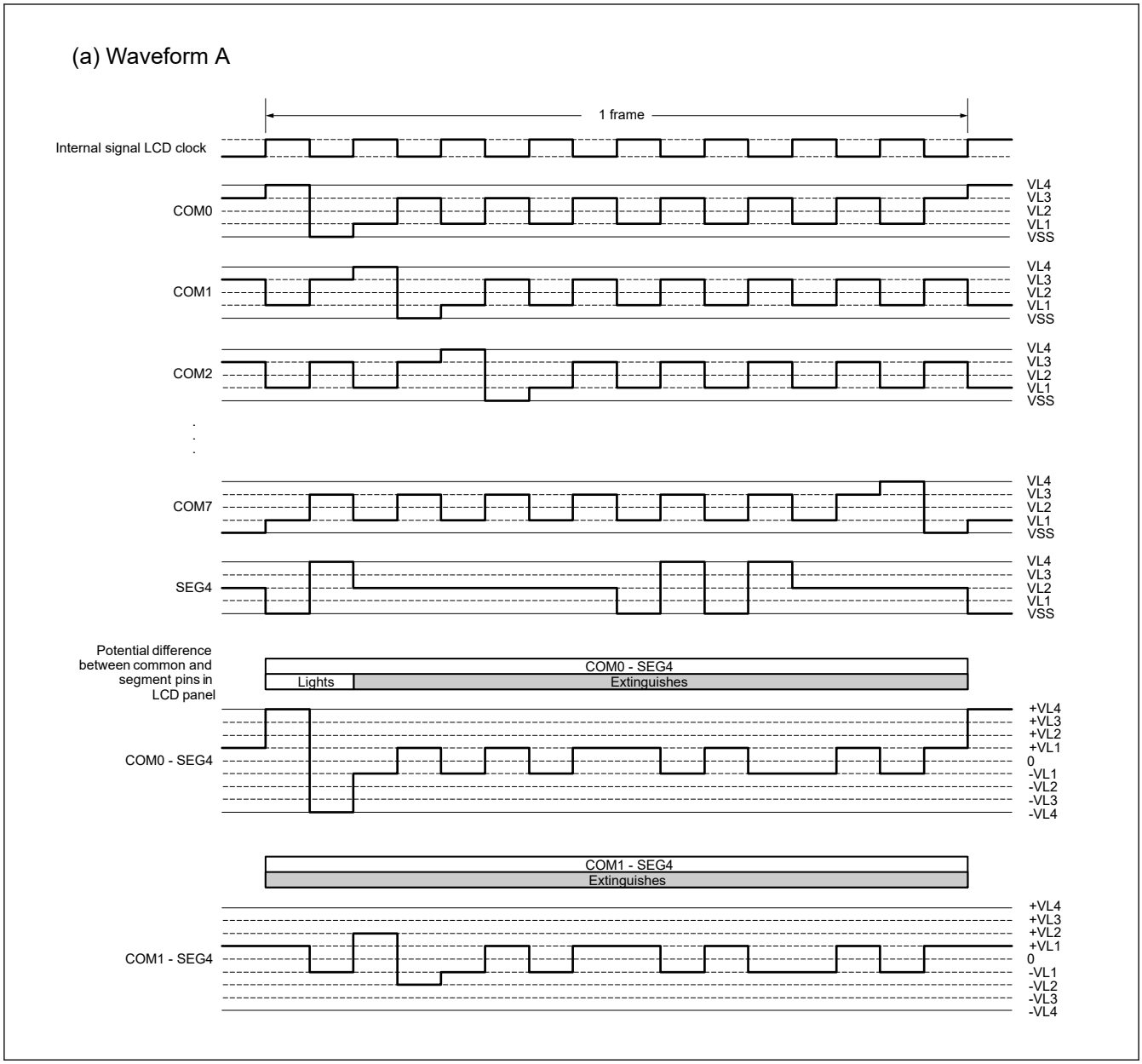

Figure 40.42 Eight-time slice LCD drive waveform examples between SEG4 and each common signal using 1/4 bias method (1 of 2)

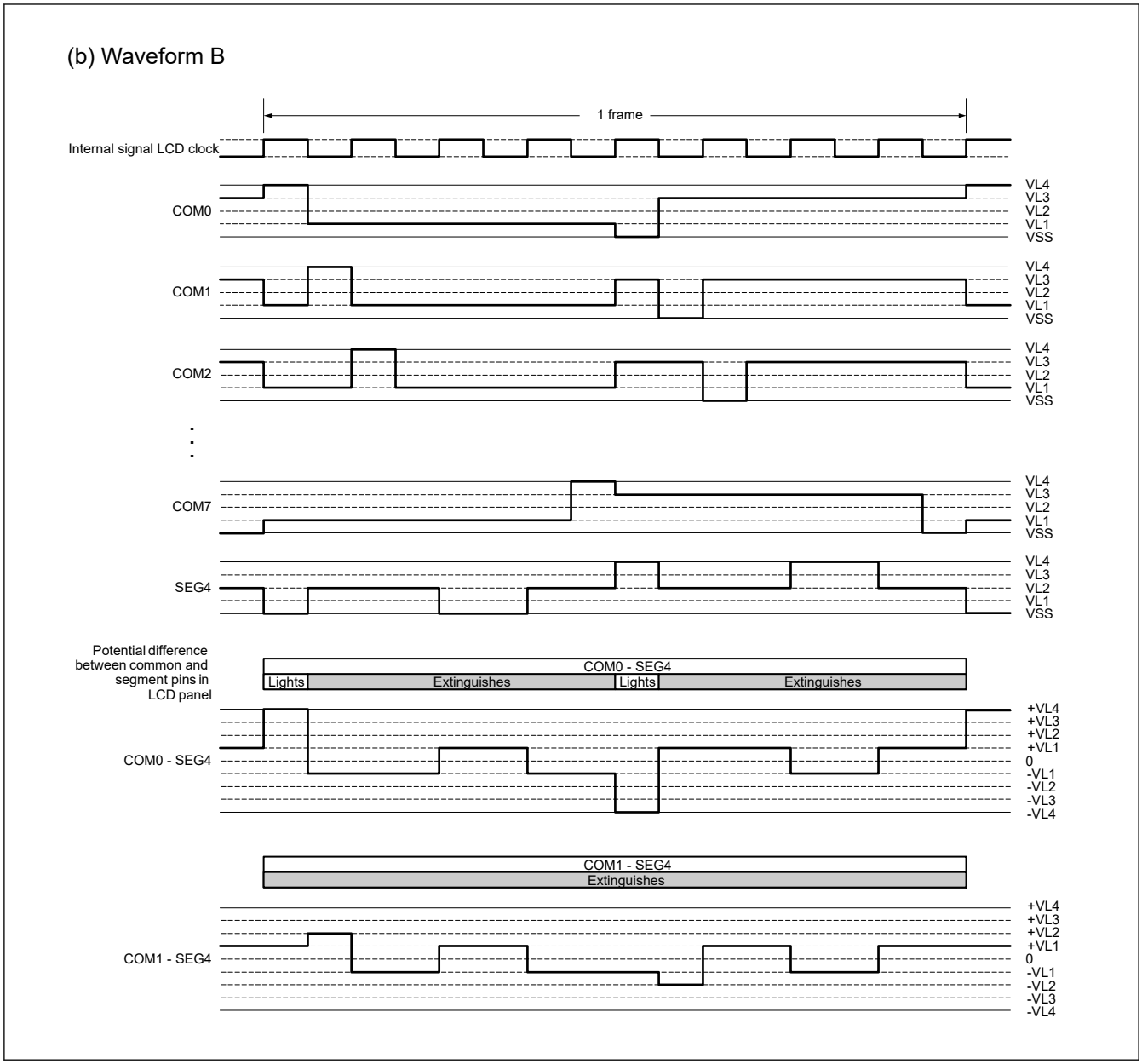

Figure 40.43 Eight-time slice LCD drive waveform examples between SEG4 and each common signal using 1/4 bias method (2 of 2)

41. Internal Voltage Regulator

41.1 Overview

The MCU includes two internal voltage regulators:

- Linear regulator (LDO)
- Linear regulator for RTC (VRTC-LDO)

Linear regulator (LDO) supplies voltage to all internal circuits and memory except for I/O, VRTC-domains, and analog domains.

Linear regulator for RTC (VRTC-LDO) supplies voltage to VRTC-domains.

41.2 Operation

Table 41.1 lists the LDO pin settings, and Figure 41.1 shows the LDO settings.

Table 41.1 LDO pin

Pins	Setting descriptions
ALL VCC	• Connect each pin to the system power supply. • Connect each pin to VSS through a 0.1-μF multilayer ceramic capacitor. Place the capacitor close to the pin.
VCL, VCL0	Connect each pin to VSS through a 4.7-μF multilayer ceramic capacitor. Place the capacitor close to the pin.
VRTC	• Connect VRTC pin to the VRTC-domain power supply. • Connect VRTC pin to VSS through a 0.1-μF multilayer ceramic capacitor. Place the capacitor close to the pin.

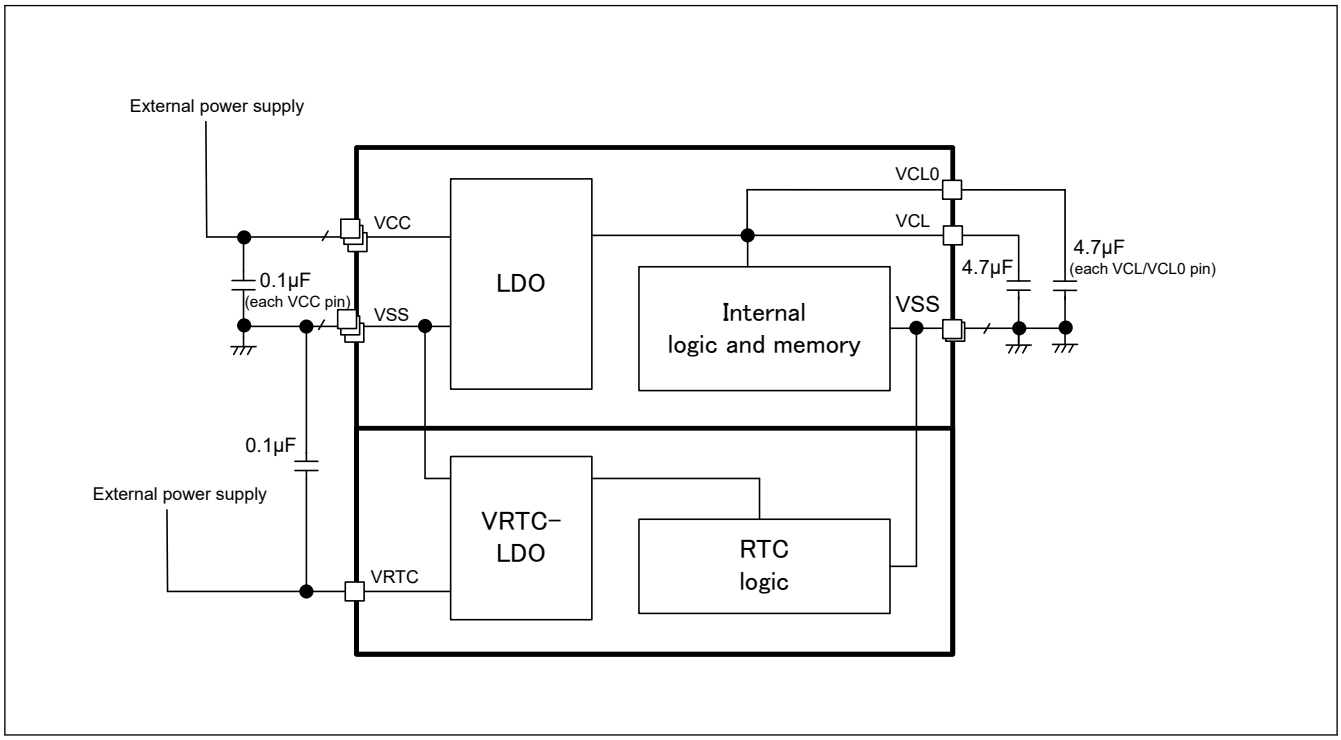

Figure 41.1 LDO settings

41.3 VRTC-Domain

The VRTC-domain area includes RTC, SOSC, and VRTC-domain power-on reset detection. See Figure 41.2.

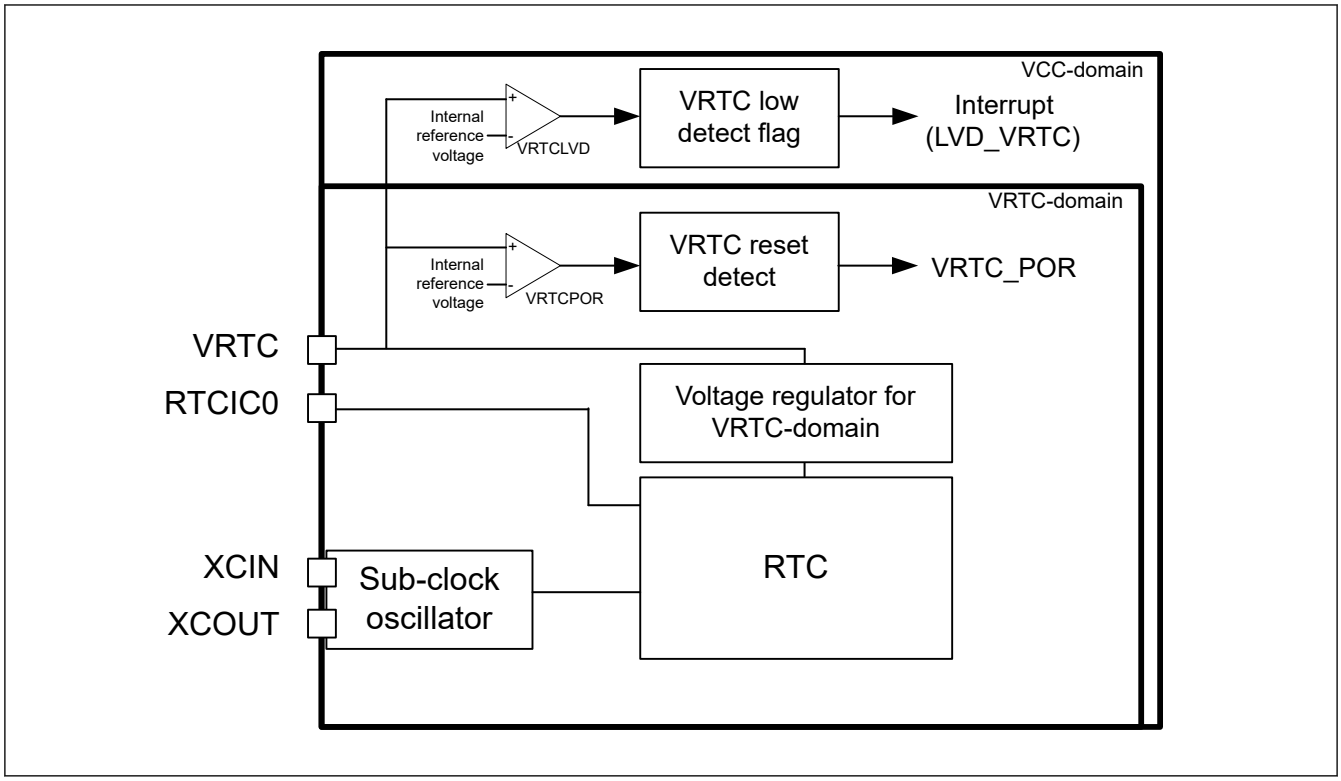

Figure 41.2 Configuration of VRTC-domain

42. Security Features

42.1 Overview

- ARMv8-M TrustZone security
  - Eight regions IDAU for memory space
    - Up to three regions for the code flash
    - Up to two regions for the data flash
    - Up to three regions for the SRAM
    - IDAU setting is common for the CPU, DMAC, and DTC
  - SAU is not implemented
  - Individual Secure or Non-secure security attribution for each peripheral
  - Some peripherals support both Secure and Non-secure security attributions
- Device lifecycle management
- Three debug access levels
  - DBG2: The debugger connection is allowed, and no restriction to access memories and peripherals
  - DBG1: The debugger connection is allowed, and restricted to access only non-secure memory regions and peripherals
  - DBG0: The debugger connection is not allowed
- Key injection
- Cryptographic accelerator
  - See section 34, Renesas Secure IP (RSIP-E31A)
- Secure pin multiplexing
  - All I/O port pins can be configured individually as secure or non-secure
  - Pin functions of SCI3, SPI0, IIC0, GPT321 and GPT165 can be configured as secure pin
  - See section 18, I/O Ports

42.2 Arm TrustZone Security

42.2.1 Arm TrustZone Technology

Arm TrustZone technology divides the system and the application into Secure and Non-secure domains. Secure application can access both Secure and Non-secure memory and resources. Non-secure application can only access Non-secure memory and resources.

The system starts up in Secure state by default. The security state of CPU can be either Secure or Non-secure.

42.2.2 Memory Security Attribution

The code flash, the data flash, and the SRAM are divided into Secure (S), Non-secure (NS) and Non-secure callable (NSC) regions. These memory security attributions are set into the nonvolatile memory by the serial programming command when the device lifecycle is SSD state. These memory security attributions are loaded into the IDAU and the memory controller before application execution. These memory security attributions cannot be updated by application but can be through the dedicated registers.

The code flash can be divided in up to three regions in the linear mode and six regions in the dual mode. The area of three regions is the same between bank 0 and bank 1 in the dual mode. The data flash can be divided in up to two regions. The SRAM can be divided in up to three regions. Figure 42.1 shows the memory mapping. Table 42.1 shows the size of memory region.

Note: It is prohibited to place Secure or Non-secure callable regions in a block swappable area in the linear mode because the secure application will be placed in the non-secure region after block swapping.

Note: The contents in Secure or Non-secure callable regions must be the same in both bank 0 and bank 1 in the dual mode. Otherwise, the contents of secure or non-secure regions may not be latest by the field updating of non-secure region. See section 42.6. Field Updating in Dual Mode.

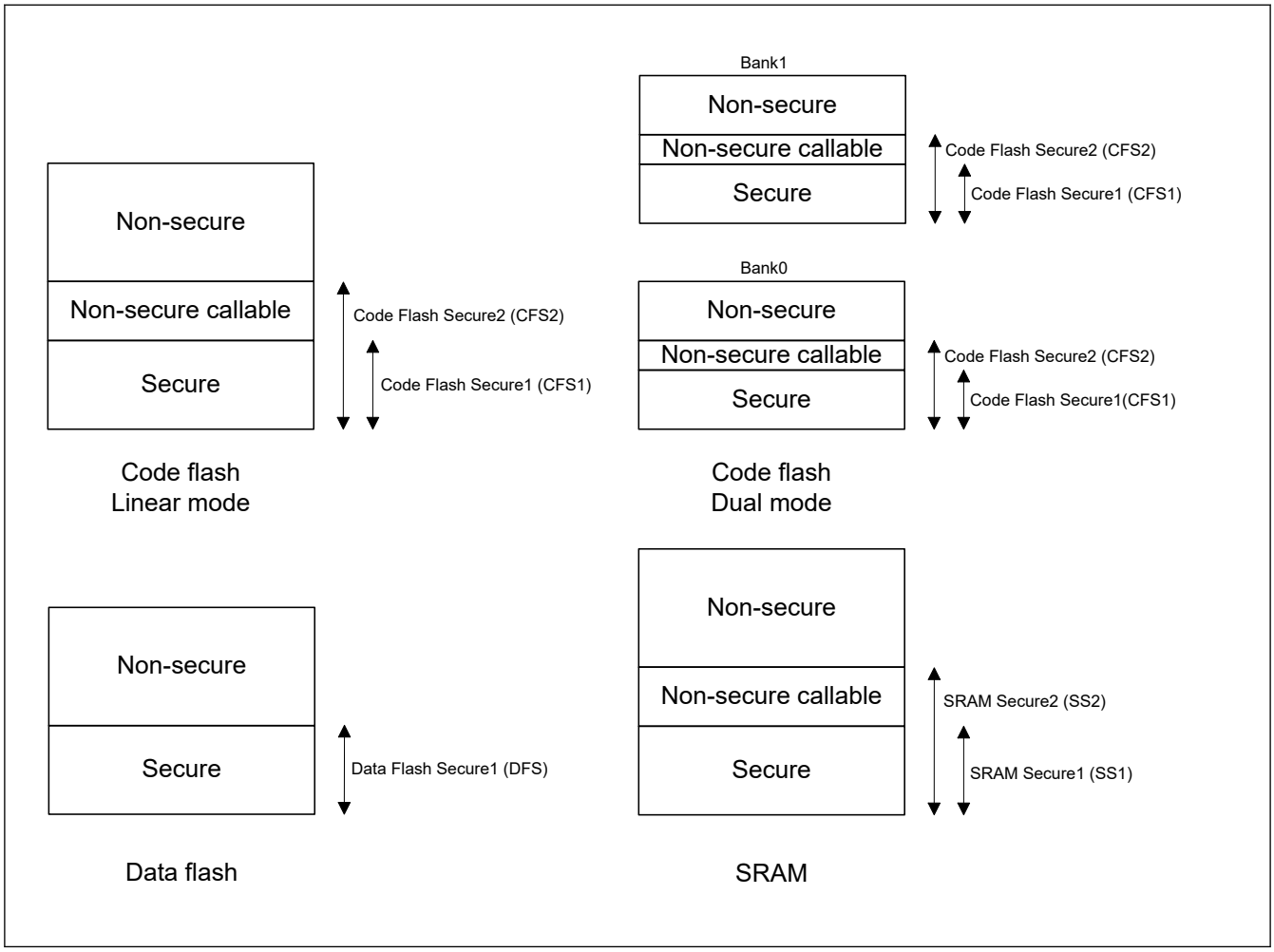

Figure 42.1 Memory mapping

Table 42.1 Memory Region Size (1 of 2)

Memory region		Start address	Size
Linear mode	Code flash secure	0x0000_0000	CFS1 × 1 KB
	Code flash non-secure callable	CFS1 × 1 KB	CFS2 × 32 KB - CFS1 × 1 KB
	Code flash non-secure	CFS2 × 32 KB	Code flash size - CFS2 × 32 KB
Dual mode	Code flash bank0 secure	0x0000_0000	CFS1 × 1 KB
	Code flash bank0 non-secure callable	CFS1 × 1 KB	CFS2 × 32 KB - CFS1 × 1 KB
	Code flash bank0 non-secure	CFS2 × 32 KB	Code flash size/2 - CFS2 × 32 KB
	Code flash bank1 secure	0x0020_0000	CFS1 × 1 KB
	Code flash bank1 non-secure callable	0x0020_0000 + CFS1 × 1 KB	CFS2 × 32 KB - CFS1 × 1 KB
	Code flash bank1 non-secure	0x0020_0000 + CFS2 × 32 KB	Code flash size/2 - CFS2 × 32 KB
Data flash secure		0x0800_0000	DFS × 1 KB
Data flash non-secure		0x0800_0000 + DFS × 1 KB	Data flash size - DFS × 1 KB
SRAM secure		0x2000_0000	SS1 × 1 KB

Table 42.1 Memory Region Size (2 of 2)

Memory region	Start address	Size
SRAM non-secure callable	0x2000_0000 + SS1 × 1 KB	SS2 × 8 KB - SS1 × 1 KB
SRAM non-secure	0x2000_0000 + SS2 × 8 KB	SRAM size - SS2 × 8 KB

Table 42.2 shows the access permission of the memory.

Table 42.2 Access permissions for memory

Memory	Secure access	Non-secure access
Code flash, data flash, SRAM configured as secure or non-secure callable	Allowed	Write ignored/Read ignored TrustZone access error is generated
Code flash, data flash, SRAM configured as non-secure	Allowed	Allowed

42.2.3 Peripheral Security Attribution

Each peripheral can be configured to be secure or non-secure.

Peripherals are divided into two types:

- Type-1 peripherals
- Type-2 peripherals

Type-1 peripherals have the one security attribution. Access to all registers is controlled by one security attribution. Type-1 peripheral security attribution is set to the PSARx (x = B to E) register by the secure application.

Type-2 peripherals have the security attribution for each register or for each bit. Access to each register or bit field is controlled according to these security attributions. Type-2 peripheral security attribution is set to the Security Attribution register in each module by the secure application. For the Security Attribution register, see sections in the User Manual for each peripheral.

Table 42.3 shows the classification of peripheral type.

Table 42.3 Peripheral type classification

Type	Peripherals
Type-1	SCI, SPI, CANFD, IIC, RSIP-E31A, DOC, CRC, CAC, ADC12, POEG, AGT, GPT, RTC, IWDT, WDT, UARTA, IrDA, SLCDC
Type-2	System control (Resets, LVD, Clock Generation Circuit, Low Power Modes), SRAM controller, DMAC, DTC, ICU, MPU, BUS, Security setting, ELC, I/O ports
Always non-secure	QSPI

Table 42.4 shows the access permission of type-1 peripherals. The access permission of type-2 peripherals is different by peripherals. See the Register Description section of each peripheral.

Table 42.4 The access permission of type-1 peripherals

Permission	Secure access	Non-secure access
Peripheral configured as secure	Allowed	Write ignored/Read ignored TrustZone access error is generated
Peripheral configured as non-secure	Allowed	Allowed

42.2.4 Flash Sequencer Security Attribution

The flash sequencer is used to program or erase the flash.

The flash sequencer has the special security attribution. Table 42.5 shows the access permission of the flash sequencer.

See section 39.12.3. Flash Memory Protection for TrustZone for the details.

Table 42.5 Access permissions of the flash sequencer

	Secure access	Non-secure access
FACI command issuing area	Allowed	When the FACI command is issued to the secure region of code flash, data flash and option-setting memory: ● Issued FACI command is invalid ● Flash sequencer error is generated When the FACI command is issued to the non-secure region of code flash, data flash and option-setting memory: ● Issued FACI command is valid
FSAR, FMEPROT, FBPROT1, FSUACR registers	Allowed	Write ignored/Readable TrustZone access error is not generated
DFLCTL, MEMWAIT, PFBER registers, FACI registers except for read-only registers, FMEPROT, FBPROT1, FSUACR registers	Allowed	Configured by Flash Security Attribution register When configured as Secure: ● Write ignored/Readable ● TrustZone access error is not generated When configured as Non-secure: ● Allowed

42.2.5 Address Space Security Attribution

Table 42.6 shows the security attribution of the address space.

Table 42.6 Address Space Security Attribution

Region	Attribution
Code flash secure	Secure
Code flash non-secure callable	Non-secure callable
Code flash non-secure	Non-secure
Data flash secure	Secure
Data flash non-secure	Non-Secure
SRAM secure	Secure
SRAM non-secure callable	Non-secure callable
SRAM non-secure	Non-secure
Peripherals	Exempt
External address space	Exempt
Other area	Exempt

Note: Exempt: No check will be done. All bus transactions are propagated.

42.2.6 TrustZone Access Error

Table 42.7 shows the behavior for TrustZone access error. The behavior varies depending on the master or slave area to be accessed.

Table 42.7 Behavior of TrustZone access error

Area	CPU	DMAC/DTC
Code flash, data flash, SRAM	Detection of SecureFault exception*2	● Transfer does not start ● Occurrence of NMI or reset*1 ● Occurrence of interrupt (DMA_TRANSERR)
Other area	● Detection of BusFault exception*2 *3 ● Occurrence of NMI or reset*1*2 *3	● Stop transfer ● Occurrence of NMI or reset *1 ● Occurrence of interrupt (DMA_TRANSERR)

Note 1. NMI or reset is selected with TZFOAD.OAD bit.
Note 2. When TrustZone access error occurs by the debugger access, exception, NMI, or reset does not occur. Only error response is returned.
Note 3. These error behaviors do not occur for write access to the PHBIU or PLBIU address space which memory attribute is set to Early Write Acknowledgment by the ARM MPU.

42.3 Device Lifecycle Management

Device lifecycle identifies the current phase of the device and controls the capabilities of the debug interface, the serial programming interface and Renesas test mode. Figure 42.2 shows an illustration of the device lifecycle states. Table 42.8 shows the lifecycle definition and capability in each lifecycle.

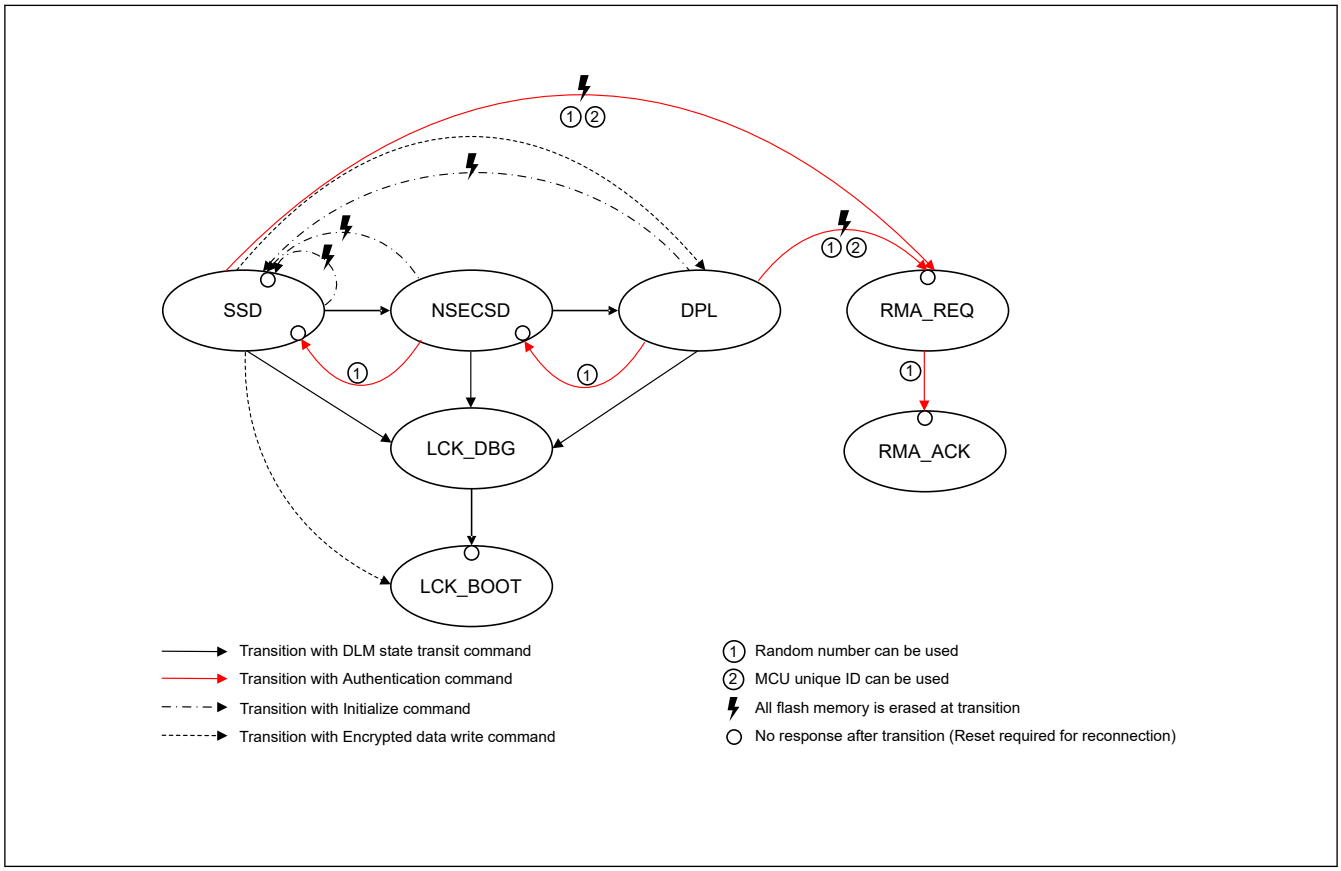

Figure 42.2 Device lifecycle states

Table 42.8 Lifecycle definition and capability that can be used in each lifecycle (1 of 2)

Lifecycle	Definition	Debug level	Serial programming	Renesas test mode
SSD	"Secure Software Development" The secure part of application is being developed	DBG2	Available Can program/erase/read all code/data flash area	Not available
NSECSD	"Non-SECure Software Development" The non-secure part of application is being developed	DBG1	Available Can program/erase/read only non-secure code/data flash area	Not available
DPL	"DePLoyed" The device is in-field	DBG0	Available Cannot access code/data flash area	Not available
LCK_DBG	"LoCKed DeBuG" The debug interface is permanently disabled	DBG0	Available Cannot access code/data flash area	Not available
LCK_BOOT	"LoCKed BOOT interface" The debug interface and the serial programming interface are permanently disabled	DBG0	Not available	Not available

Table 42.8 Lifecycle definition and capability that can be used in each lifecycle (2 of 2)

Lifecycle	Definition	Debug level	Serial programming	Renesas test mode
RMA_REQ	"Return Material Authorization REQuest" Request for RMA. The customer must send the device to Renesas in this state.	DBG0	Available Cannot access code/data flash area	Not available
RMA_ACK	"Return Material Authorization ACKnowledged" Failure analysis in Renesas	DBG2	Available Cannot access code/data flash area	Available

42.3.1 Changing the Lifecycle State

Use the serial programming commands to change the device lifecycle state. See the boot firmware application note for the detail of command. The lifecycle cannot be updated by application but can read through the dedicated registers.

As shown in Figure 42.2, there are three types lifecycle transition.

The first one is to change to lower debug access level or restrict the serial programming mode. This change can be done with no restriction.

Note: The debug interface is permanently disabled in LCK_DBG. After changed to LCK_DBG, the debug interface cannot be used forever.

Note: The debug interface and serial programming interface are permanently disabled in LCK_BOOT. After changed to LCK_BOOT, the debug interface and the serial programming interface cannot be used forever.

The second one is to change to higher debug access level or request for RMA. This change needs key authentication. The key length is 128 bits. The secure developer needs to inject two keys when the lifecycle is SSD state. One is "SECDBG_KEY" which is used to authentication to change the lifecycle from NSECSD to SSD. Other one is "RMA_KEY" which is used to authentication to change the lifecycle from SSD or DPL to RMA_REQ. The non-secure developer needs to inject one key when the lifecycle is NSECSD state. This is "NONSECDBG_KEY" which is used to authentication to change the lifecycle from DPL to NSECSD. See section 42.4. Key Injection for the detail of how to inject the key. The key authentication uses a challenge and response authentication or authentication using the unique ID. The authentication using the unique ID is available only transition to RMA_REQ. The following is the process of how to calculate the response, challenge and response authentication, or the authentication code using unique ID.

Response = AES-128 CMAC (RMA_KEY, 128-bit challenge)

Authentication code = AES-128 CMAC (RMA_KEY, 128-bit MCU unique ID)

Note: In case the key is not injected, these lifecycle changes cannot be done.

Note: In the lifecycle transition from NSECSD to SSD or form DPL to NSECSD, the contents on the flash memory are not erased.

Note: MCU does not respond after changing to higher debug access level or RMA_REQ. If you continue to use the serial programming commands, need to re-enter the boot mode after a reset. See the boot firmware application note for the detail.

Note: In the lifecycle transition to RMA_REQ, the contents on the flash memory except permanently locked block or setting or BPS_SEL register are erased. The contents in the permanently locked block or register can be read by Renesas at failure analysis. Permanently locked block means the block which programming and erasure is disabled permanently by PBPS, PBPS_SEC and BPS_SEL register. Permanently locked register means SAS register which programming and erasure is disabled permanently by FSPR bit.

The third one is all erase. This is done by an initialize command unless an initialize command itself is disabled. The lifecycle is back to SSD and the contents on the flash memory is erased. If there is permanently locked block or register, an initialize command does not execute. In case of the all bits of PBPS and PBPS_SEC register are 1 and FSPR bit is1, an initialize command is executable.

Note: The initialize command can be issued by everyone, so contents on the flash memory are easily erased. Developers who do not want this can invalidate the initialize command permanently by parameter setting command.

Note: MCU does not respond after executing the initialize command. If you continue to use the serial programming commands, need to re-enter the boot mode after a reset. See the boot firmware application note for the detail.

Note: Use the serial programming in boot mode (SCI interface) to change the device lifecycle state. A serial programming connection is also required even if debugging using SWD communication.

42.3.2 Debug Access Level

There are three debug access levels, and the debug access level changes according to the lifecycle state.

- DBG2: The debugger connection is allowed, and no restriction to access memories and peripherals
- DBG1: The debugger connection is allowed, and restricted to access only non-secure memory regions and peripherals
- DBG0: The debugger connection is not allowed

42.3.3 Serial Programming

Whether a serial programmer can be connected and the range of flash memory that can be accessed depends on the lifecycle state as shown in Table 42.8. And the accepted serial programming command differs depending on the lifecycle state. See the boot firmware application note for the detail of command.

42.3.4 Lifecycle Change Example

The following example shows a typical lifecycle change.

Secure developer

- Set the memory security attribution of the code flash, data flash and SRAM by using the serial programming command
- Program the secure application by using the serial programming interface and debug the secure application. If the memory security attribution is not set, all area of the code flash, data flash and SRAM is secure.

Note: Configure the registers listed in Table 42.10 as non-secure only in NSECSD state. See section 42.8.1. Restrictions on setting the security attribution for details.

- Inject “SECDBG_KEY” and “RMA_KEY” by using the serial programming command (if required)
- Inject AES, RSA, ECC, HMAC keys listed in Table 42.9 (if required)
- Disable the all erase by using the serial programming command (if required)
- Change the lifecycle from SSD to NSECSD by using the serial programming command

Non-secure developer

- Program the non-secure application by using the serial programming interface and debug the non-secure application
- Inject “NONSECDBG_KEY” by using the serial programming command (if required)
- Inject AES, RSA, ECC, HMAC keys listed in Table 42.9 (if required)
- Disable the all erase by using the serial programming command (if required)
- Change the lifecycle to DPL by using the serial programming command

42.3.5 Failure Analysis

If the customer requests a failure analysis to Renesas, it is necessary to send the device after changing the lifecycle to RMA_REQ. If the lifecycle is not RMA_REQ, Renesas cannot do the failure analysis. Because RMA_REQ is permanent state, it cannot revert to the another state after changing to RMA_REQ. It is assumed to change to SSD or NSECSD and analyze before changing to RMA_REQ.

Devices sent to Renesas will not be returned to customers. The device will be discarded.

Note: As described in section 42.3.1. Changing the Lifecycle State, RMA_KEY is required to change the lifecycle to RMA_REQ. If the customer forgets the RMA_KEY, Renesas cannot do the failure analysis.

42.4 Key Injection

There are three steps required to inject a user key into the MCU.

1. Create the 256 bits installation key. This key is called User Factory Programming Key (UFPK) and used to encrypt a user key. Obtain the key of the wrapped version (W-UFPK) through the Renesas Key Wrapping Service.

2. Encrypt the user key using UFPK as the AES key.
3. Send W-UFPK and the encrypted user key to the MCU using serial programming interface. The sent user key is decrypted, wrapped with the hardware unique key, and then stored in the nonvolatile memory.

Figure 42.3 shows an illustration of key injection. Table 42.9 shows the keys that can be injected using serial programming interface.

User key is used for authentication during the lifecycle transition.

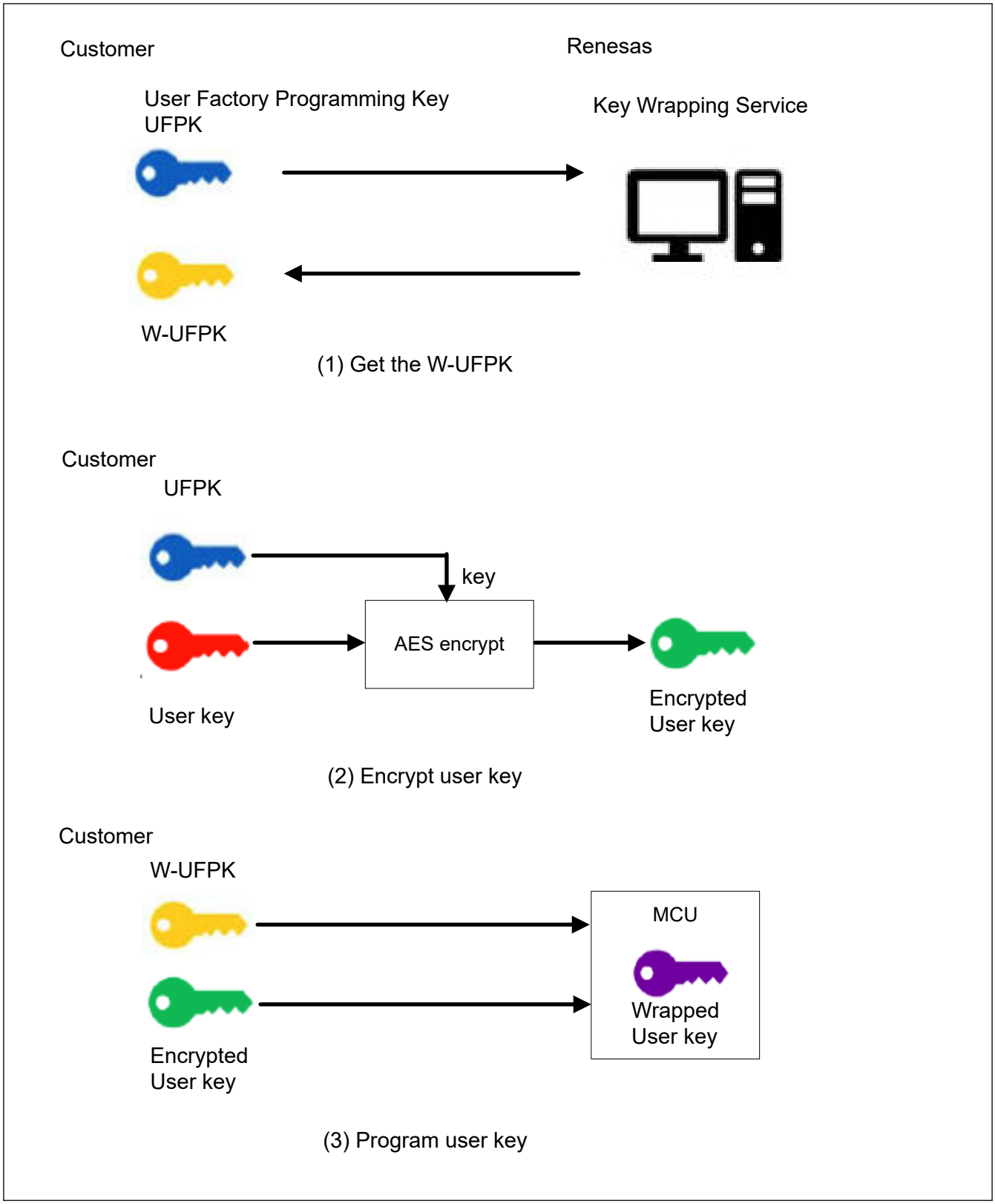

Figure 42.3 Key injection

Table 42.9 The keys that can be injected using serial programming (1 of 2)

Lifecycle transition	SECDBG_KEY, NONSECDBG_KEY, RMA_KEY
AES	AES-128, AES-256
ECC	ECC P256 (public and private)

Table 42.9 The keys that can be injected using serial programming (2 of 2)

HMAC	HMAC-SHA224, HMAC-SHA256

42.5 Secure Factory Programming

In addition to secure key injection support for injecting user keys (DLM, debug authentication, and application), the MCU supports the programming of a firmware image in ciphertext format to prevent assets from being leaked during production programming. This enables secure factory programming in a non-secure environment. Secure factory programming is supported by the boot firmware. Figure 42.4 shows an example of secure factory programming of an encrypted firmware image. The customer wraps the Image Encryption Key with the UFPK and encrypts the image with the Image Encryption Key using AES128-CCM. When the customer sends the W-UFPK, the wrapped Image Encryption Key, and encrypted image to the MCU through the serial programming interface, the MCU decrypts and programs the firmware image.

To further support secure factory programming in a non-secure environment, the DLM state, and Authentication Keys can all be set via a single boot firmware command. Points to note about this boot firmware command include:

- Encrypted firmware programming can be performed only when the MCU is in the SSD state.
- When transitioning the DLM state to DPL, this command injects both the SECDBG_KEY and NONSECDBG_KEY.
- When transitioning the DLM state to LCK_BOOT, this command does not inject either the SECDBG_KEY or the NONSECDBG_KEY.
- The SECDBG_KEY and NONSECDBG_KEY injected by this command must be wrapped with the same UFPK as the image encryption key.
- This command will set the security attributes of the memory.
- This command will erase all code and data flash area except option-setting memory before programming encrypted firmware image. If there are any permanently locked blocks, this command can not be executed.
- Prohibit to execute this command if the current register setting or write value to the registers related to startup area selection and startup bank selection are other than the following.
  - SAS.BTFLG = 1b
  - BANKSEL.BANKSWP[2:0] = 111b
  - BANKSEL_SEC.BANKSWP[2:0] = 111b
- All option-setting memory values must be included in the encrypted firmware image, including those not changed from their default values. However, if the following areas are write-protected, the write data in these areas should not be included in the image. If included, this command will terminate with an error.
  - SAS register

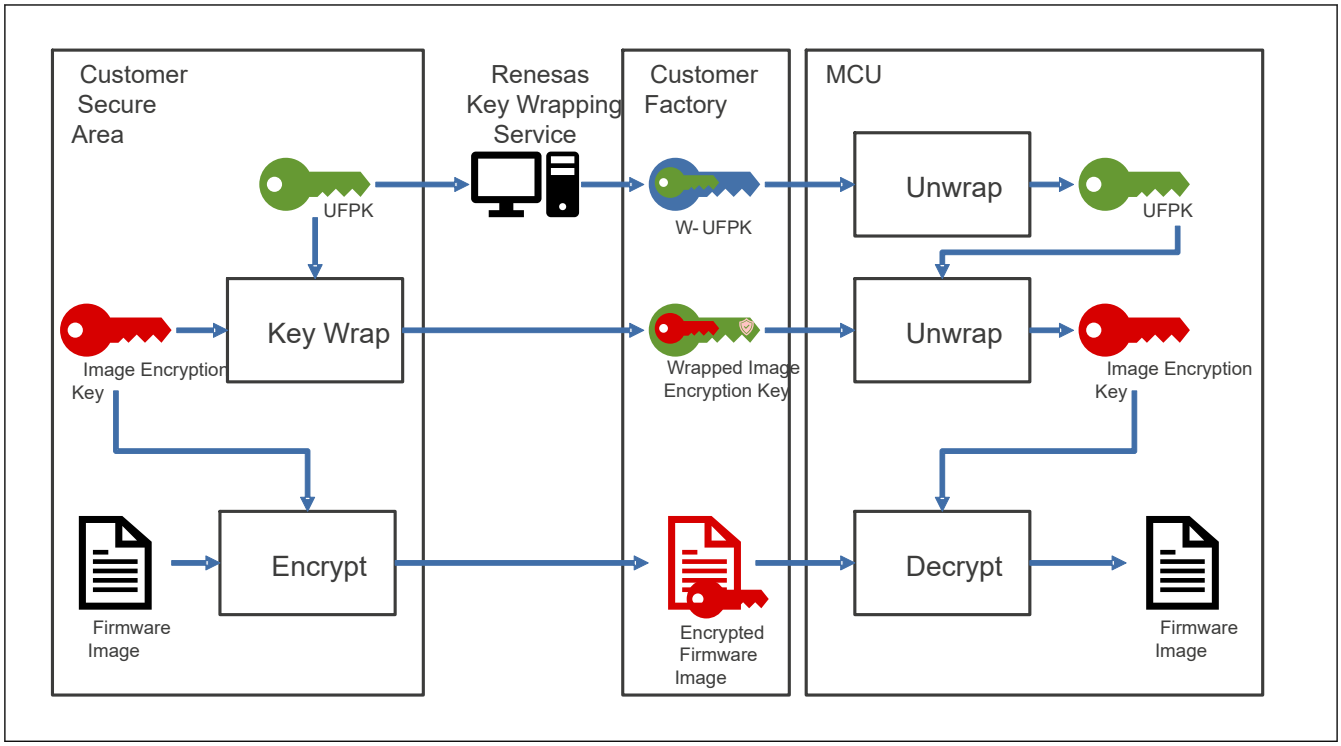

Figure 42.4 Secure factory encrypted image programming

42.6 Field Updating in Dual Mode

Be careful when performing in-field update of information to keep the contents of secure or non-secure regions after bank swapping in the dual mode. Figure 42.5 and Figure 42.6 shows the performing in-field update of information flow of secure or non-secure regions in the dual mode.

In this example of Figure 42.5, BANK0 is valid, and Version 1 information is stored in NS and S or NSC.

BANK1 is blank. To update the S or NSC information in the field to Version 2, first copy the version 1 information of BANK0 to NS, update the S or NSC to Version 2, and then execute the Bank swap.

In this example of Figure 42.6, BANK0 is valid, and Version 1 information is stored in NS and S or NSC. BANK1 is blank.

To update the NS information in the field and set it to Version 2, first of all, non-secure users should have the Secure user copy the version 1 information of BANK0 to BANK1.

After that, non-secure user should update NS information to Version 2 and execute BANK swap.

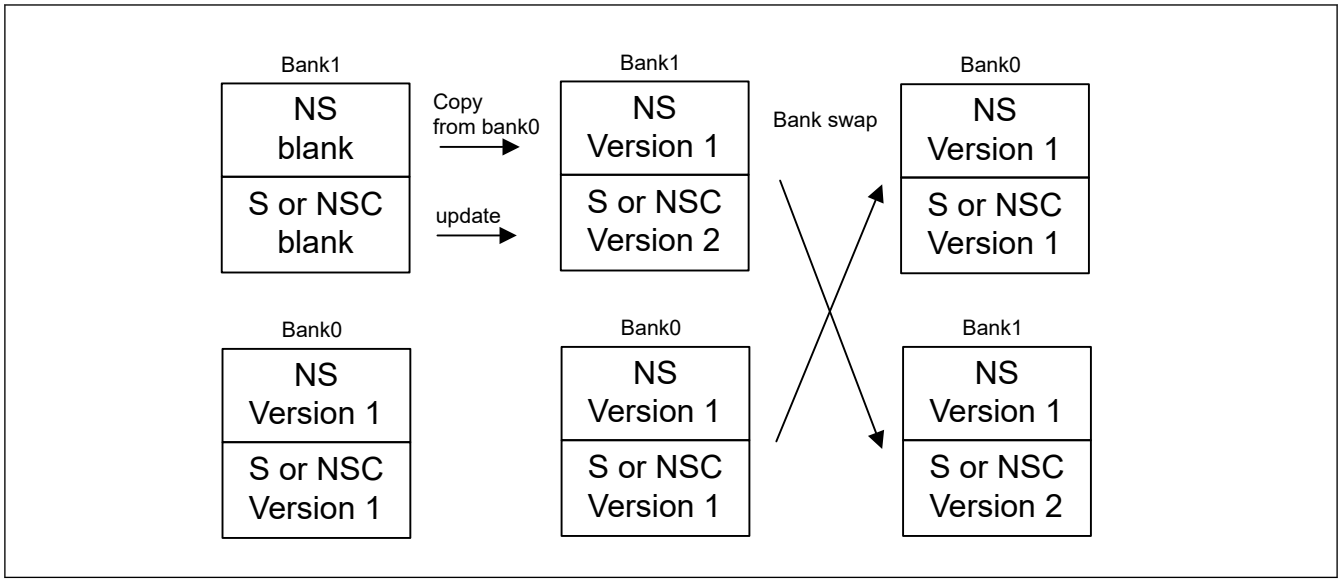

Figure 42.5 The field updating flow of secure or non-secure callable regions

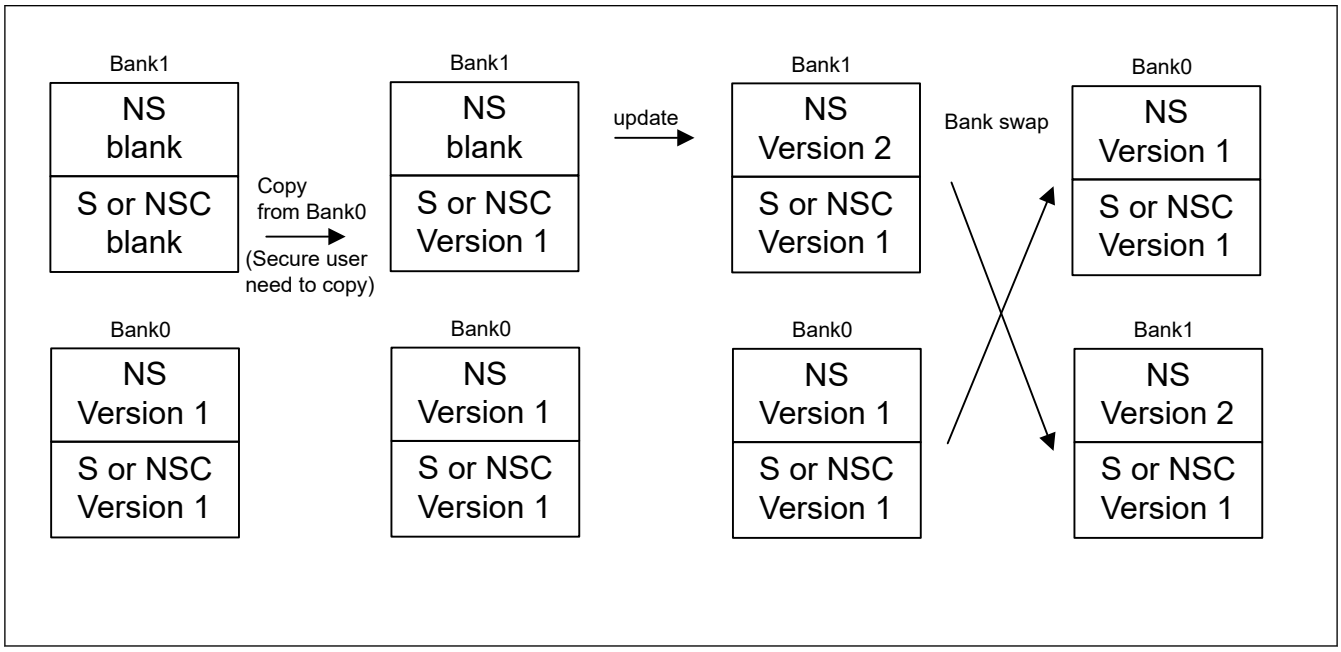

Figure 42.6 The field updating flow of non-secure region

42.7 Register Description

42.7.1 PSARB : Peripheral Security Attribution Register B

Base address: PSCU = 0x400E_0000

Offset address: 0x04

Bit position:	31	30	29	28	27	26	25	24	23	22	21	20	19	18	17	16
Bit field:	PSARB31	PSARB30	—	PSARB28	PSARB27	PSARB26	—	—	—	PSARB22	—	—	PSARB19	PSARB18	PSARB17	—
Value after reset:	1	1	1	1	1	1	1	1	1	1	1	1	1	1	1	1

Bit position:	15	14	13	12	11	10	9	8	7	6	5	4	3	2	1	0
Bit field:	—	—	—	—	—	—	PSARB9	PSARB8	—	PSARB6	PSARB5	—	—	—	—	PSARB0
Value after reset:	1	1	1	1	1	1	1	1	1	1	1	1	1	1	1	1

Bit	Symbol	Function	R/W
0	PSARB0	UARTA and the MSTPCRB.MSTPB0 Bit Security Attribution 0: Secure 1: Non-secure	R/W
4:1	—	These bits are read as 1. The write value should be 1.	R/W
5	PSARB5	IrDA and the MSTPCRB.MSTPB5 Bit Security Attribution 0: Secure 1: Non-secure	R/W
6	PSARB6	QSPI and the MSTPCRB.MSTPB6 Bit Security Attribution This bit is read as 1 (non-secure).	R
7	—	This bit is read as 1. The write value should be 1.	R/W
8	PSARB8	IIC1 and the MSTPCRB.MSTPB8 Bit Security Attribution 0: Secure 1: Non-secure	R/W
9	PSARB9	IIC0 and the MSTPCRB.MSTPB9 Bit Security Attribution 0: Secure 1: Non-secure	R/W
16:10	—	These bits are read as 1. The write value should be 1.	R/W
17	PSARB17	SPI2 and the MSTPCRB.MSTPB17 Bit Security Attribution 0: Secure 1: Non-secure	R/W
18	PSARB18	SPI1 and the MSTPCRB.MSTPB18 Bit Security Attribution 0: Secure 1: Non-secure	R/W
19	PSARB19	SPI0 and the MSTPCRB.MSTPB19 Bit Security Attribution 0: Secure 1: Non-secure	R/W
21:20	—	These bits are read as 1. The write value should be 1.	R/W
22	PSARB22	SCI9 and the MSTPCRB.MSTPB22 Bit Security Attribution 0: Secure 1: Non-secure	R/W
25:23	—	These bits are read as 1. The write value should be 1.	R/W
26	PSARB26	SCI5 and the MSTPCRB.MSTPB26 Bit Security Attribution 0: Secure 1: Non-secure	R/W
27	PSARB27	SCI4 and the MSTPCRB.MSTPB27 Bit Security Attribution 0: Secure 1: Non-secure	R/W

Bit	Symbol	Function	R/W
28	PSARB28	SCI3 and the MSTPCRB.MSTPB28 Bit Security Attribution 0: Secure 1: Non-secure	R/W
29	—	This bit is read as 1. The write value should be 1.	R/W
30	PSARB30	SCI1 and the MSTPCRB.MSTPB30 Bit Security Attribution 0: Secure 1: Non-secure	R/W
31	PSARB31	SCI0 and the MSTPCRB.MSTPB31 Bit Security Attribution 0: Secure 1: Non-secure	R/W

Note: A bit undefined in this table is reserved bit. The reserved bit should be kept the initial value.
Note: Only Secure access can write to this register. Both Secure access and Non-secure read access are allowed but Non-secure write access is not allowed and TrustZone access error is not generated.
Note: This register is write-protected by PRCR register.

The PSARB register specifies the security attribution for each module and the corresponding bit in the Module Stop Control Register.

42.7.2 PSARC : Peripheral Security Attribution Register C

Base address: PSCU = 0x400E_0000

Offset address: 0x08

Bit position:	31	30	29	28	27	26	25	24	23	22	21	20	19	18	17	16
Bit field:	PSARC31	—	—	—	PSARC27	—	—	—	—	—	—	—	—	—	—	—
Value after reset:	1	1	1	1	1	1	1	1	1	1	1	1	1	1	1	1

Bit position:	15	14	13	12	11	10	9	8	7	6	5	4	3	2	1	0
Bit field:	—	—	PSARC13	—	—	—	—	—	—	—	—	PSARC4	—	—	PSARC1	PSARC0
Value after reset:	1	1	1	1	1	1	1	1	1	1	1	1	1	1	1	1

Bit	Symbol	Function	R/W
0	PSARC0	CAC and the MSTPCRC.MSTPC0 Bit Security Attribution 0: Secure 1: Non-secure	R/W
1	PSARC1	CRC and the MSTPCRC.MSTPC1 Bit Security Attribution 0: Secure 1: Non-secure	R/W
3:2	—	These bits are read as 1. The write value should be 1.	R/W
4	PSARC4	SLCDC and the MSTPCRB.MSTPC4 Bit Security Attribution 0: Secure 1: Non-secure	R/W
12:5	—	These bits are read as 1. The write value should be 1.	R/W
13	PSARC13	DOC and the MSTPCRC.MSTPC13 Bit Security Attribution 0: Secure 1: Non-secure	R/W
26:14	—	These bits are read as 1. The write value should be 1.	R/W
27	PSARC27	CANFD0 and the MSTPCRC.MSTPC27 Bit Security Attribution 0: Secure 1: Non-secure	R/W
30:28	—	These bits are read as 1. The write value should be 1.	R/W

Bit	Symbol	Function	R/W
31	PSARC31	RSIP-E31A and the MSTPCRC.MSTPC31 Bit Security Attribution 0: Secure 1: Non-secure	R/W

Note: Only Secure access can write to this register. Both Secure access and Non-secure read access are allowed but Non-secure write access is not allowed and TrustZone access error is not generated.
Note: This register is write-protected by PRCR register.

The PSARC register specifies the security attribution for each module and the corresponding bit in the Module Stop Control Register.

42.7.3 PSARD : Peripheral Security Attribution Register D

Base address: PSCU = 0x400E_0000

Offset address: 0x0C

Bit position:	31	30	29	28	27	26	25	24	23	22	21	20	19	18	17	16
Bit field:	—	—	—	—	—	—	—	—	—	—	—	—	—	—	—	PSARD16
Value after reset:	1	1	1	1	1	1	1	1	1	1	1	1	1	1	1	1

Bit position:	15	14	13	12	11	10	9	8	7	6	5	4	3	2	1	0
Bit field:	—	PSARD14	PSARD13	PSARD12	PSARD11	—	—	—	—	—	—	—	PSARD3	PSARD2	—	—
Value after reset:	1	1	1	1	1	1	1	1	1	1	1	1	1	1	1	1

Bit	Symbol	Function	R/W
1:0	—	These bits are read as 1. The write value should be 1.	R/W
2	PSARD2	AGT1 and the MSTPCRD.MSTPD2 Bit Security Attribution 0: Secure 1: Non-secure	R/W
3	PSARD3	AGT0 and the MSTPCRD.MSTPD3 Bit Security Attribution 0: Secure 1: Non-secure	R/W
10:4	—	These bits are read as 1. The write value should be 1.	R/W
11	PSARD11	POEG Group D and the MSTPCRD.MSTPD11 Bit Security Attribution 0: Secure 1: Non-secure	R/W
12	PSARD12	POEG Group C and the MSTPCRD.MSTPD12 Bit Security Attribution 0: Secure 1: Non-secure	R/W
13	PSARD13	POEG Group B and the MSTPCRD.MSTPD13 Bit Security Attribution 0: Secure 1: Non-secure	R/W
14	PSARD14	POEG Group A and the MSTPCRD.MSTPD14 Bit Security Attribution 0: Secure 1: Non-secure	R/W
15	—	This bit is read as 1. The write value should be 1.	R/W
16	PSARD16	ADC120 and the MSTPCRD.MSTPD16 Bit Security Attribution 0: Secure 1: Non-secure	R/W
31:17	—	These bits are read as 1. The write value should be 1.	R/W

Note: Only Secure access can write to this register. Both Secure access and Non-secure read access are allowed but Non-secure write access is not allowed and TrustZone access error is not generated.
Note: This register is write-protected by PRCR register.

The PSARD register specifies the security attribution for each module and the corresponding bit in the Module Stop Control Register.

42.7.4 PSARE : Peripheral Security Attribution Register E

Base address: PSCU = 0x400E_0000

Offset address: 0x10

Bit position:	31	30	29	28	27	26	25	24	23	22	21	20	19	18	17	16
Bit field:	PSARE31	PSARE30	PSARE29	PSARE28	PSARE27	PSARE26	—	—	—	—	—	—	—	—	—	—
Value after reset:	1	1	1	1	1	1	1	1	1	1	1	1	1	1	1	1

Bit position:	15	14	13	12	11	10	9	8	7	6	5	4	3	2	1	0
Bit field:	—	—	—	—	—	—	—	—	—	—	—	—	—	PSARE2	PSARE1	PSARE0
Value after reset:	1	1	1	1	1	1	1	1	1	1	1	1	1	1	1	1

Bit	Symbol	Function	R/W
0	PSARE0	WDT Security Attribution 0: Secure 1: Non-secure	R/W
1	PSARE1	IWDT Security Attribution 0: Secure 1: Non-secure	R/W
2	PSARE2	RTC Security Attribution 0: Secure 1: Non-secure	R/W
25:3	—	These bits are read as 1. The write value should be 1.	R/W
26	PSARE26	GPT5 and the MSTPCRE.MSTPE26 Bit Security Attribution 0: Secure 1: Non-secure	R/W
27	PSARE27	GPT4 and the MSTPCRE.MSTPE27 Bit Security Attribution 0: Secure 1: Non-secure	R/W
28	PSARE28	GPT3 and the MSTPCRE.MSTPE28 Bit Security Attribution 0: Secure 1: Non-secure	R/W
29	PSARE29	GPT2 and the MSTPCRE.MSTPE29 Bit Security Attribution 0: Secure 1: Non-secure	R/W
30	PSARE30	GPT1 and the MSTPCRE.MSTPE30 Bit Security Attribution 0: Secure 1: Non-secure	R/W
31	PSARE31	GPT0, GPT_OPS and the MSTPCRE.MSTPE31 Bit Security Attribution 0: Secure 1: Non-secure	R/W

Note: Only Secure access can write to this register. Both Secure access and Non-secure read access are allowed but Non-secure write access is not allowed and TrustZone access error is not generated.

Note: This register is write-protected by PRCR register.

The PSARE register specifies the security attribution for each module and the corresponding bit in the Module Stop Control Register.

42.7.5 MSSAR : Module Stop Security Attribution Register

Base address: PSCU = 0x400E_0000

Offset address: 0x14

Bit position:	31	30	29	28	27	26	25	24	23	22	21	20	19	18	17	16
Bit field:	—	—	—	—	—	—	—	—	—	—	—	—	—	—	—	—
Value after reset:	1	1	1	1	1	1	1	1	1	1	1	1	1	1	1	1

Bit position:	15	14	13	12	11	10	9	8	7	6	5	4	3	2	1	0
Bit field:	—	—	—	—	—	—	—	—	—	—	—	MSSAR4	MSSAR3	—	MSSAR1	MSSAR0
Value after reset:	1	1	1	1	1	1	1	1	1	1	1	1	1	1	1	1

Bit	Symbol	Function	R/W
0	MSSAR0	The MSTPCRC.MSTPC14 Bit Security Attribution 0: Secure 1: Non-secure	R/W
1	MSSAR1	The MSTPCRA.MSTPA22 Bit Security Attribution 0: Secure 1: Non-secure	R/W
2	—	This bit is read as 1. The write value should be 1.	R/W
3	MSSAR3	The MSTPCRA.MSTPA0 Bit Security Attribution 0: Secure 1: Non-secure	R/W
4	MSSAR4	The MSTPCRA.MSMSTPA16 Bit Security Attribution 0: Secure 1: Non-secure	R/W
31:5	—	These bits are read as 1. The write value should be 1.	R/W

Note: Only Secure access can write to this register. Both Secure access and Non-secure read access are allowed but Non-secure write access is not allowed and TrustZone access error is not generated.

Note: This register is write-protected by PRCR register.

The MSSAR register specifies the security attribution for the corresponding bit in the Module Stop Control Register.

42.7.6 CFSAMONA : Code Flash Security Attribution Monitor Register A

Base address: PSCU = 0x400E_0000

Offset address: 0x18

Bit position:	31								23																15																								0
Bit field:	—	—	—	—	—	—	—	—	CFS2[8:0]																—	—	—	—	—	—	—	—	—	—	—	—	—	—	—
Value after reset:	0	0	0	0	0	0	0	0	User setting*1																0	0	0	0	0	0	0	0	0	0	0	0	0	0	0

Bit	Symbol	Function	R/W
14:0	—	These bits are read as 0.	R
23:15	CFS2[8:0]	Code Flash Secure area 2 Indicate the total area of secure region and non-secure callable region for code flash.	R
31:24	—	These bits are read as 0.	R

Note: The CFSAMONA does not have security attribution.

Note 1. The value in a blank product is 0x1FF. It is set to the value written by your application.

42.7.7 CFSAMONB : Code Flash Security Attribution Monitor Register B

Base address: PSCU = 0x400E_0000

Offset address: 0x1C

Bit position:	31								23												10												0
Bit field:	—	—	—	—	—	—	—	—	CFS1[13:0]												—	—	—	—	—	—	—	—	—	—	—	—	—
Value after reset:	0	0	0	0	0	0	0	0	User setting*1												0	0	0	0	0	0	0	0	0	0	0	0

Bit	Symbol	Function	R/W
9:0	—	These bits are read as 0.	R
23:10	CFS1[13:0]	Code Flash Secure area 1 Indicate the area of secure region for code flash.	R
31:24	—	These bits are read as 0.	R

Note: The CFSAMONB does not have security attribution.
Note 1. The value in a blank product is 0x3FFF. It is set to the value written by your application.

42.7.8 DFSAMON : Data Flash Security Attribution Monitor Register

Base address: PSCU = 0x400E_0000

Offset address: 0x20

Bit position:	31																15					10											0
Bit field:	—	—	—	—	—	—	—	—	—	—	—	—	—	—	—	—	DFS[5:0]					—	—	—	—	—	—	—	—	—	—	—	—
Value after reset:	0	0	0	0	0	0	0	0	0	0	0	0	0	0	0	0	User setting*1					0	0	0	0	0	0	0	0	0	0	0	0

Bit	Symbol	Function	R/W
9:0	—	These bits are read as 0.	R
15:10	DFS[5:0]	Data flash Secure area Indicate the area of Secure region for data flash.	R
31:16	—	These bits are read as 0.	R

Note: The DFSAMON does not have security attribution.
Note 1. The value in a blank product is 0x3F. It is set to the value written by your application.

42.7.9 SSAMONA : SRAM Security Attribution Monitor Register A

Base address: PSCU = 0x400E_0000

Offset address: 0x24

Bit position:	31											20								13													0
Bit field:	—	—	—	—	—	—	—	—	—	—	—	SS2[7:0]								—	—	—	—	—	—	—	—	—	—	—	—	—	—
Value after reset:	0	0	0	0	0	0	0	0	0	0	0	User setting*1								0	0	0	0	0	0	0	0	0	0	0	0	0	0

Bit	Symbol	Function	R/W
12:0	—	These bits are read as 0.	R
20:13	SS2[7:0]	SRAM Secure area 2 Indicate the total area of Secure region and non-secure callable region for SRAM.	R
31:21	—	These bits are read as 0.	R

Note: The SSAMONA does not have security attribution.
Note 1. The value in a blank product is 0xFF. It is set to the value written by your application.

42.7.10 SSAMONB : SRAM Security Attribution Monitor Register B

Base address: PSCU = 0x400E_0000

Offset address: 0x28

Bit position:	31											20										10										0
Bit field:	—	—	—	—	—	—	—	—	—	—	—	SS1[10:0]										—	—	—	—	—	—	—	—	—	—	—
Value after reset:	0	0	0	0	0	0	0	0	0	0	0	User setting*1										0	0	0	0	0	0	0	0	0	0	0

Bit	Symbol	Function	R/W
9:0	—	These bits are read as 0.	R
20:10	SS1[10:0]	SRAM secure area 1 Indicate the area of secure region for SRAM.	R
31:21	—	These bits are read as 0.	R

Note: The SSAMONB does not have security attribution.
Note 1. The value in a blank product is 0x7FF. It is set to the value written by your application.

42.7.11 DLMMON : Device Lifecycle Management State Monitor Register

Base address: PSCU = 0x400E_0000

Offset address: 0x2C

Bit position:	31	30	29	28	27	26	25	24	23	22	21	20	19	18	17	16
Bit field:	—	—	—	—	—	—	—	—	—	—	—	—	—	—	—	—
Value after reset:	0	0	0	0	0	0	0	0	0	0	0	0	0	0	0	0

Bit position:	15	14	13	12	11	10	9	8	7	6	5	4	3	2	1	0
Bit field:	—	—	—	—	—	—	—	—	—	—	—	—	DLMMON[3:0]			
Value after reset:	0	0	0	0	0	0	0	0	0	0	0	0	DLM status value			

Bit	Symbol	Function	R/W
3:0	DLMMON[3:0]	Device Lifecycle Management State Monitor 0x2: SSD 0x3: NSECSD 0x4: DPL 0x5: LCK_DBG 0x6: LCK_BOOT 0x7: RMA_REQ 0x8: RMA_ACK Others: Reserved	R
31:4	—	These bits are read as 0. The write value should be 0.	R

Note: The DLMMON does not have security attribution.

42.7.12 TZFSAR : TrustZone Filter Security Attribution Register

Base address: CPSCU = 0x4000_8000

Offset address: 0x180

Bit position:	31	30	29	28	27	26	25	24	23	22	21	20	19	18	17	16
Bit field:	—	—	—	—	—	—	—	—	—	—	—	—	—	—	—	—
Value after reset:	1	1	1	1	1	1	1	1	1	1	1	1	1	1	1	1

Bit position:	15	14	13	12	11	10	9	8	7	6	5	4	3	2	1	0
Bit field:	—	—	—	—	—	—	—	—	—	—	—	—	—	—	—	TZFSA0
Value after reset:	1	1	1	1	1	1	1	1	1	1	1	1	1	1	1	0

Bit	Symbol	Function	R/W
0	TZFSA0	Security attributes of registers for TrustZone Filter 0: Secure 1: Non-secure	R/W
31:1	—	These bits are read as 1.	R

Note: Only Secure access can write to this register. Both Secure access and Non-secure read access are allowed but Non-secure write access is not allowed and TrustZone access error is not generated.

Note: This register is write-protected by PRCR register.

TZFSA0 bit (Security attributes of registers for TrustZone Filter)

Security attributes of register for TZFOAD and TZFPT registers.

42.7.13 TZFOAD : TrustZone Filter Operation After Detection Register

Base address: TZF = 0x4000_0E00

Offset address: 0x00

Bit position:	15	14	13	12	11	10	9	8	7	6	5	4	3	2	1	0
Bit field:	KEY[7:0]								—	—	—	—	—	—	—	OAD
Value after reset:	0	0	0	0	0	0	0	0	0	0	0	0	0	0	0	0

Bit	Symbol	Function	R/W
0	OAD	Operation after detection 0: Non-maskable interrupt 1: Reset	R/W
7:1	—	These bits are read as 0. The write value should be 0.	R/W
15:8	KEY[7:0]	KeyCode This bit is used to enable or disable writing of the OAD bit.	W

Note: If the security attribution is configured as Secure:
- Secure access and Non-secure read access are allowed
- Non-secure write access is ignored, and TrustZone access error is not generated.

If the security attribution is configured as Non-secure:
- Secure and Non-secure access are allowed.

OAD bit (Operation after detection)

The OAD bit is specified to generate either reset or non-maskable interrupt when the access to the protect region is detected by the TrustZone Filter.

When the OAD bit is set, write 0xA5 in the KEY[7:0] bits at the same time.

KEY[7:0] bits (KeyCode)

The KEY[7:0] bits are used to enable or disable writing of the OAD bit. When writing the OAD bit, write 0xA5 in the KEY[7:0] bits at the same time.

When the KEY[7:0] bits value except 0xA5 is written in, the OAD bit is not updated.

The KEY[7:0] bits are read always as 0x00.

42.7.14 TZFPT : TrustZone Filter Protect Register

Base address: TZF = 0x4000_0E00

Offset address: 0x04

Bit position:	15	14	13	12	11	10	9	8	7	6	5	4	3	2	1	0
Bit field:	KEY[7:0]								—	—	—	—	—	—	—	PROTECT
Value after reset:	0	0	0	0	0	0	0	0	0	0	0	0	0	0	0	0

Bit	Symbol	Function	R/W
0	PROTECT	Protection of register 0: All Bus TrustZone Filter register writing is protected. Read is possible. 1: All Bus TrustZone Filter register writing is possible.	R/W
7:1	—	These bits are read as 0. The write value should be 0.	R/W
15:8	KEY[7:0]	KeyCode This bit is used to enable or disable writing of the PROTECT bit.	W

Note: If the security attribution is configured as Secure:
- Secure access and Non-secure read access are allowed
- Non-secure write access is ignored, and TrustZone access error is not generated.

If the security attribution is configured as Non-secure:
- Secure and Non-secure access are allowed.

PROTECT bit (Protection of register)

The PROTECT bit controls enable or disable writing to the corresponding registers to be protected. TZFOAD register is protected by PROTECT.

When the PROTECT bit is set, write 0xA5 in the KEY[7:0] bits at the same time.

KEY[7:0] bits (KeyCode)

The KEY[7:0] bits are used to enable or disable writing of the PROTECT bit. When writing the PROTECT bit, write 0xA5 in the KEY[7:0] bits at the same time.

When the KEY[7:0] bits value except 0xA5 is written in, the PROTECT bit is not updated.

The KEY[7:0] bits are read always as 0x00.

42.8 Usage Notes

42.8.1 Restrictions on setting the security attribution

To set the software breakpoint, the debugger need to re-program the flash. Table 42.10 shows the registers that the debugger sets to re-program the flash. If the security attribution of the register listed in Table 42.10 is configured as secure, the debugger cannot set the software breakpoint in NSECSD state because the debugger cannot change the register setting. Secure developper need to configure the registers listed in Table 42.10 as non-secure only in NSECSD state.

Table 42.10 The registers that the debugger sets to re-program the flash

Function name	Register name
Clock Generation Circuit	SCKDIVCR, SCKSCR, PLLCCR, PLLCR, HOCOCR, MOCOCR
Low-Power modes	OPCCR, SOPCCR

42.8.2 SAU setting

After reset, all of address space is marked as Secure by SAU default setting. SAU_CTRL register should be set to 0x2 to enable the IDAU security attribution. That is, after setting SAU_CTRL register to 0x2, the address space security attribution becomes as shown in Table 42.6.

43. Electrical Characteristics

Unless otherwise specified, minimum and maximum values are guaranteed by either design simulation, characterization results or test in production.

Supported peripheral functions and pins differ from one product name to another.

Unless otherwise specified, the electrical characteristics of the MCU are defined under the following conditions:

VCC[*1] = AVCC0 = 1.6 to 3.6 V, VRTC = 1.6 to 3.6 V, VREFH0 = 1.6 V to AVCC0

VSS = AVSS0 = VREFL0 = 0 V, Ta = T_{opr}

Note 1. The typical condition is set to VCC = 3.3 V.

Figure 43.1 shows the timing conditions.

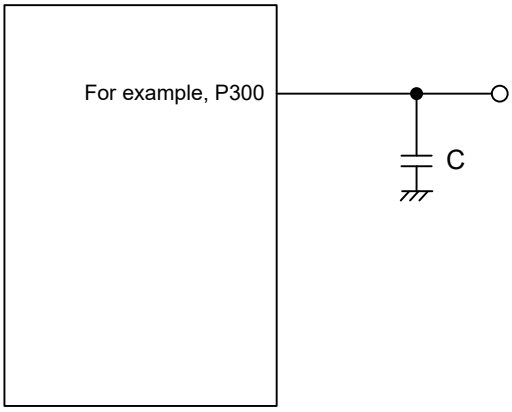

V_{OH} = VCC × 0.7, V_{OL} = VCC × 0.3
V_{IH} = VCC × 0.7, V_{IL} = VCC × 0.3
Load capacitance C = 30 pF

Figure 43.1 Input or output timing measurement conditions

The measurement conditions of the timing specifications for each peripheral are recommended for the best peripheral operation. However, make sure to adjust driving abilities for each pin to meet the conditions of your system.

43.1 Absolute Maximum Ratings

Table 43.1 Absolute maximum ratings (1 of 2)

Parameter		Symbol	Value	Unit
Power supply voltage		VCC	-0.5 to +4.0	V
RTC power supply voltage		VRTC	-0.5 to +4.0	V
Input voltage	5V-tolerant ports[*1]	V_{in}	-0.3 to +6.5	V
	P000 to P004, P010, P011	V_{in}	-0.3 to AVCC0 + 0.3	V
	P214, P215, RTCIC0	V_{in}	-0.3 to VRTC + 0.3	V
	Others	V_{in}	-0.3 to VCC + 0.3	V
Reference power supply voltage		VREFH0	-0.3 to +4.0	V
Analog power supply voltage		AVCC0[*2]	-0.5 to +4.0	V

Table 43.1 Absolute maximum ratings (2 of 2)

Parameter		Symbol	Value	Unit
Analog input voltage	When AN000 to AN006 are used	V_{AN}	-0.3 to AVCC0 + 0.3	V
	When AN017 to AN025 are used		-0.3 to VCC + 0.3	V
Operating temperature*3		T_{opr}	-40 to +105	°C
Storage temperature		T_{stg}	-55 to +125	°C

Note 1. Ports P301, P302, P400, and P401 are 5V-tolerant.
Do not input signals or an I/O pull-up power supply while the device is not powered. The current injection that results from input of such a signal or I/O pull-up might cause malfunction and the abnormal current that passes in the device at this time might cause degradation of internal elements.
Note 2. Connect AVCC0 to VCC
Note 3. See section 43.2.1. Tj/Ta Definition.

Caution: Permanent damage to the MCU may result if absolute maximum ratings are exceeded.

To preclude any malfunctions due to noise interference, insert capacitors with high frequency characteristics between the VCC and VSS pins, between the AVCC0 and AVSS0 pins, and between the VREFH0 and VREFL0 pins when VREFH0 is selected as the high potential reference voltage for the ADC12. Place capacitors of the following value as close as possible to every power supply pin and use the shortest and heaviest possible traces:

- **VCC and VSS: about 0.1 µF**
- **VRTC and VSS: about 0.1 µF**
- **AVCC0 and AVSS0: about 0.1 µF**
- **VREFH0 and VREFL0: about 0.1 µF**

Also, connect capacitors as stabilization capacitance.

Connect the VCL pin and VCL0 pin to a VSS pin by a 4.7 µF capacitor. Each capacitor must be placed close to the pin.

Table 43.2 Recommended operating conditions

Parameter	Symbol		Min	Typ	Max	Unit
Power supply voltages	VCC*1 *2		1.6	—	3.6	V
	VSS		—	0	—	V
RTC power supply voltage	VRTC		1.6	—	3.6	V
Analog power supply voltages	AVCC0*1 *2		1.6	—	3.6	V
	AVSS0		—	0	—	V
	VREFH0	When used as ADC12 Reference	1.6	—	AVCC0	V
	VREFL0		—	0	—	V

Note 1. Use AVCC0 and VCC under the following conditions:
AVCC0 = VCC
Note 2. When powering on the VCC and AVCC0 pins, power them on at the same time or the VCC pin first and then the AVCC0 pins.
When powering off the VCC and AVCC0 pins, power them off at the same time or the AVCC0 pin first and then the VCC pins.

43.2 DC Characteristics

43.2.1 Tj/Ta Definition

Table 43.3 DC characteristics

Conditions: Products with operating temperature (Ta) -40 to +105 °C

Parameter	Symbol	Typ	Max	Unit	Test conditions
Permissible junction temperature	Tj	—	125*1	°C	High-speed mode Middle-speed mode Low-speed mode Subosc-speed mode

Note: Make sure that Tj = T_a + θja × total power consumption (W), where total power consumption = (VCC - V_{OH}) × ΣI_{OH} + V_{OL} × ΣI_{OL} + I_{CC}max × VCC.

Note 1. The upper limit of operating temperature is 125 °C, depending on the product. For details, see section 1.3. Part Numbering. If the part number shows the operation temperature at 105 °C, then the maximum value of Tj is 125 °C.

43.2.2 I/O V_{IH}, V_{IL}

Table 43.4 I/O V_{IH}, V_{IL}

Conditions: VCC = AVCC0 = 1.6 to 3.6 V, VRTC = 1.6 to 3.6 V

Parameter		Symbol	Min	Typ	Max	Unit	Test Conditions
Schmitt trigger input voltage	IIC (SDA0_A, SCL0_A, SDA1_A, SCL1_A) (except for SMBus)*1	V_{IH}	VCC × 0.7	—	5.8	V	—
		V_{IL}	—	—	VCC × 0.3		
		ΔV_T	VCC × 0.10	—	—		VCC = 2.7 V to 3.6 V
			VCC × 0.05	—	—		VCC = 1.6 V to2.7 V
	RES, NMI Other peripheral input pins excluding IIC (SDA0_A, SCL0_A, SDA1_A, SCL1_A)	V_{IH}	VCC × 0.8	—	—		—
		V_{IL}	—	—	VCC × 0.2		
		ΔV_T	VCC × 0.10	—	—		VCC = 2.7 V to 3.6 V
			VCC × 0.05	—	—		VCC = 1.6 V to 2.7 V
	RTCIC0	V_{IH}	VRTC × 0.8	—	—		—
		V_{IL}	—	—	VRTC × 0.2		—
		ΔV_T	—	0.71	—		—
Input voltage except for Schmitt trigger input pin	IIC (SMBus)*2	V_{IH}	2.0	—	—		VCC = 1.8 to 3.6 V
		V_{IL}	—	—	0.5		VCC = 1.8 to 3.6 V
	5V-tolerant ports*3	V_{IH}	VCC × 0.8	—	5.8		—
		V_{IL}	—	—	VCC × 0.2		
	P000 to P004, P010, P011	V_{IH}	AVCC0 × 0.8	—	—		
		V_{IL}	—	—	AVCC0 × 0.2		
	P214, P215	V_{IH}	VRTC × 0.8	—	—		
		V_{IL}	—	—	VRTC × 0.2		
	Input port pins except for P000 to P004, P010, P011	V_{IH}	VCC × 0.8	—	—		
		V_{IL}	—	—	VCC × 0.2		

Note 1. SCL0_A, SDA0_A, SDA1_A, SCL1_A (total 4 pins)
Note 2. SCL0_A, SDA0_A, SCL0_B, SDA0_B, SDA1_A, SCL1_A (total 6 pins)
Note 3. P400, P401, P301, P302 (total 4 pins)

43.2.3 I/O I_{OH}, I_{OL}

Table 43.5 I/O I_{OH}, I_{OL} (1 of 4)

Conditions: VCC = AVCC0 = 1.6 to 3.6 V

Parameter	Symbol	Min	Typ	Max	Unit	Test conditions
Permissible output current (average value per pin)	I_{OH}	—	—	−4.0	mA	
	I_{OL}	—	—	8.0	mA	
Permissible output current (max value per pin)	I_{OH}	—	—	−4.0	mA	
	I_{OL}	—	—	8.0	mA	

Table 43.5 I/O I_{OH}, I_{OL} (2 of 4)

Conditions: VCC = AVCC0 = 1.6 to 3.6 V

Parameter			Symbol	Min	Typ	Max	Unit	Test conditions
Permissible output current (max value total pins)*1	All products	Total of ports P000 to P004, P010, P011	ΣI_{OH} (max)	—	—	−30	mA	AVCC0 = 2.7 to 3.6 V
				—	—	−8	mA	AVCC0 = 1.8 to 2.7 V
				—	—	−4	mA	AVCC0 = 1.6 to 1.8 V
			ΣI_{OL} (max)	—	—	50	mA	AVCC0 = 2.7 to 3.6 V
				—	—	4	mA	AVCC0 = 1.8 to 2.7 V
				—	—	2	mA	AVCC0 = 1.6 to 1.8 V
		Total of ports P212, P213	ΣI_{OH}	—	—	−8.0	mA	VCC = 2.7 to 3.6 V
				—	—	−2	mA	VCC = 1.8 to 2.7 V
				—	—	−1	mA	VCC = 1.6 to 1.8 V
			ΣI_{OL}	—	—	16.0	mA	VCC = 2.7 to 3.6 V
				—	—	1.2	mA	VCC = 1.8 to 2.7 V
				—	—	0.6	mA	VCC = 1.6 to 1.8 V
	100 pin products	Total of ports P400 to P406, P408 to P415, P708	ΣI_{OH} (max)	—	—	−30	mA	VCC = 2.7 to 3.6 V
				—	—	−8	mA	VCC = 1.8 to 2.7 V
				—	—	−4	mA	VCC = 1.6 to 1.8 V
			ΣI_{OL} (max)	—	—	50	mA	VCC = 2.7 to 3.6 V
				—	—	4	mA	VCC = 1.8 to 2.7 V
				—	—	2	mA	VCC = 1.6 to 1.8 V

Table 43.5 I/O I_{OH}, I_{OL} (3 of 4)

Conditions: VCC = AVCC0 = 1.6 to 3.6 V

Parameter			Symbol	Min	Typ	Max	Unit	Test conditions
Permissible output current (max value total pins)*1	100 pin products	Total of ports P204 to P211, P814, P815	ΣI_{OH} (max)	—	—	−30	mA	VCC = 2.7 to 3.6 V
				—	—	−8	mA	VCC = 1.8 to 2.7 V
				—	—	−4	mA	VCC = 1.6 to 1.8 V
			ΣI_{OL} (max)	—	—	50	mA	VCC = 2.7 to 3.6 V
				—	—	4	mA	VCC = 1.8 to 2.7 V
				—	—	2	mA	VCC = 1.6 to 1.8 V
		Total of ports P108 to P112, P201, P300 to P307	ΣI_{OH} (max)	—	—	−30	mA	VCC = 2.7 to 3.6 V
				—	—	−8	mA	VCC = 1.8 to 2.7 V
				—	—	−4	mA	VCC = 1.6 to 1.8 V
			ΣI_{OL} (max)	—	—	50	mA	VCC = 2.7 to 3.6 V
				—	—	4	mA	VCC = 1.8 to 2.7 V
				—	—	2	mA	VCC = 1.6 to 1.8 V
		Total of ports P100 to P107, P113 to P115, P600 to P602, P608 to P610	ΣI_{OH}	—	—	−30	mA	VCC = 2.7 to 3.6 V
				—	—	−8	mA	VCC = 1.8 to 2.7 V
				—	—	−4	mA	VCC = 1.6 to 1.8 V
			ΣI_{OL}	—	—	50	mA	VCC = 2.7 to 3.6 V
				—	—	4	mA	VCC = 1.8 to 2.7 V
				—	—	2	mA	VCC = 1.6 to 1.8 V
		Total of ports P500 to P513	ΣI_{OH} (max)	—	—	−30	mA	VCC = 2.7 to 3.6 V
				—	—	−8	mA	VCC = 1.8 to 2.7 V
				—	—	−4	mA	VCC = 1.6 to 1.8 V
			ΣI_{OL} (max)	—	—	50	mA	VCC = 2.7 to 3.6 V
				—	—	4	mA	VCC = 1.8 to 2.7 V
				—	—	2	mA	VCC = 1.6 to 1.8 V
		Total of all output pin	ΣI_{OH} (max)	—	—	−100	mA	
			ΣI_{OL} (max)	—	—	100	mA	

Table 43.5 I/O I_{OH}, I_{OL} (4 of 4)

Conditions: VCC = AVCC0 = 1.6 to 3.6 V

Parameter			Symbol	Min	Typ	Max	Unit	Test conditions
Permissible output current (max value total pins)*1	64 pin LQFP	Total of ports P400, P401, P407 to P411	ΣI_{OH} (max)	—	—	−30	mA	VCC = 2.7 to 3.6 V
				—	—	−8	mA	VCC = 1.8 to 2.7 V
				—	—	−4	mA	VCC = 1.6 to 1.8 V
			ΣI_{OL} (max)	—	—	50	mA	VCC = 2.7 to 3.6 V
				—	—	4	mA	VCC = 1.8 to 2.7 V
				—	—	2	mA	VCC = 1.6 to 1.8 V
		Total of ports P201, P205 to P208, P303, P304, P814, P815	ΣI_{OH} (max)	—	—	−30	mA	VCC = 2.7 to 3.6 V
				—	—	−8	mA	VCC = 1.8 to 2.7 V
				—	—	−4	mA	VCC = 1.6 to 1.8 V
			ΣI_{OL} (max)	—	—	50	mA	VCC = 2.7 to 3.6 V
				—	—	4	mA	VCC = 1.8 to 2.7 V
				—	—	2	mA	VCC = 1.6 to 1.8 V
		Total of ports P105, P106, P108 to P113, P300 to P302	ΣI_{OH} (max)	—	—	−30	mA	VCC = 2.7 to 3.6 V
				—	—	−8	mA	VCC = 1.8 to 2.7 V
				—	—	−4	mA	VCC = 1.6 to 1.8 V
			ΣI_{OL} (max)	—	—	50	mA	VCC = 2.7 to 3.6 V
				—	—	4	mA	VCC = 1.8 to 2.7 V
				—	—	2	mA	VCC = 1.6 to 1.8 V
		Total of ports P100 to P104, P500, P506 to P509	ΣI_{OH} (max)	—	—	−30	mA	VCC = 2.7 to 3.6 V
				—	—	−8	mA	VCC = 1.8 to 2.7 V
				—	—	−4	mA	VCC = 1.6 to 1.8 V
			ΣI_{OL} (max)	—	—	50	mA	VCC = 2.7 to 3.6 V
				—	—	4	mA	VCC = 1.8 to 2.7 V
				—	—	2	mA	VCC = 1.6 to 1.8 V
		Total of all output pin	ΣI_{OH} (max)	—	—	−60	mA	
			ΣI_{OL} (max)	—	—	100	mA	

Note 1. Specification under conditions where the duty factor ≤ 70%.
The output current value that has changed to the duty factor > 70% the duty ratio can be calculated with the following expression (when changing the duty factor from 70% to n%).
Total output current of pins = $(I_{OH} \times 0.7)/(n \times 0.01)$
<Example> Where n = 80% and I_{OH} = −30.0 mA
Total output current of pins = (−30.0 × 0.7)/(80 × 0.01) ≅ −26.2 mA
However, the current that is allowed to flow into one pin does not vary depending on the duty factor.

43.2.4 I/O V_{OH}, V_{OL}, and Other Characteristics

Table 43.6 I/O V_{OH}, V_{OL} (1)

Conditions: VCC = AVCC0 = 2.7 to 3.6 V

Parameter		Symbol	Min	Typ	Max	Unit	Test conditions
Output voltage	P400, P401	V_{OH}	VCC − 0.27	—	—	V	I_{OH} = −3.0 mA
			VCC − 0.8	—	—		I_{OH} = −4.0 mA
	Ports P000 to P004, P010, P011	V_{OH}	AVCC0 − 0.8	—	—		I_{OH} = −4.0 mA
	Output pins except for P000 to P004 and P010, P011, P400, P401*1	V_{OH}	VCC − 0.8	—	—		I_{OH} = −4.0 mA
	P400, P401	V_{OL}	—	—	0.27		I_{OL} = 3.0 mA
			—	0.4	—		I_{OL} = 20 mA (ICFER.FMPE = 1)
			—	—	0.8		I_{OL} = 8.0 mA
	P301, P302	V_{OL}	—	0.4	—		I_{OL} = 20 mA (ICFER.FMPE = 1)
			—	—	0.8		I_{OL} = 8.0 mA
	Ports P000 to P004, P010, P011	V_{OL}	—	—	0.8		I_{OL} = 8.0 mA
	Output pins except for P000 to P004 and P010, P011, P301, P302, P400, P401*1	V_{OL}	—	—	0.8		I_{OL} = 8.0 mA

Note 1. Except for Ports P200, P214, P215, and RTCIC0, which are input ports.

Table 43.7 I/O V_{OH}, V_{OL} (2)

Conditions: VCC = AVCC0 = 1.8 to 2.7 V

Parameter		Symbol	Min	Typ	Max	Unit	Test conditions
Output voltage	Ports P000 to P004, P010, P011	V_{OH}	AVCC0 − 0.5	—	—	V	I_{OH} = −1.0 mA
	Output pins except for P000 to P004 and P010, P011*1	V_{OH}	VCC − 0.5	—	—		I_{OH} = −1.0 mA
	P301, P302, P400, P401	V_{OL}	—	0.4	—		I_{OL} = 3.0 mA
			—	0.6	—		I_{OL} = 6.0 mA
			—	—	0.4		I_{OL} = 0.6 mA
	Ports P000 to P004, P010, P011	V_{OL}	—	—	0.4		I_{OL} = 0.6 mA
	Output pins except for P000 to P004 and P010, P011, P301, P302, P400, P401*1	V_{OL}	—	—	0.4		I_{OL} = 0.6 mA

Note 1. Except for Ports P200, P214, P215, and RTCIC0, which are input ports.

Table 43.8 I/O V_{OH}, V_{OL} (3)

Conditions: VCC = AVCC0 = 1.6 to 1.8 V

Parameter		Symbol	Min	Typ	Max	Unit	Test conditions
Output voltage	Ports P000 to P004, P010, P011	V_{OH}	AVCC0 − 0.5	—	—	V	I_{OH} = −0.5 mA
	Output pins except for P000 to P004 and P010, P011*1	V_{OH}	VCC − 0.5	—	—		I_{OH} = −0.5 mA
	Ports P000 to P004, P010, P011	V_{OL}	—	—	0.4		I_{OL} = 0.3 mA
	Output pins except for P000 to P004 and P010, P011*1	V_{OL}	—	—	0.4		I_{OL} = 0.3 mA

Note 1. Except for Ports P200, P214, P215, and RTCIC0, which are input ports.

Table 43.9 I/O other characteristics

Conditions: VCC = AVCC0 = 1.6 to 3.6 V

Parameter		Symbol	Min	Typ	Max	Unit	Test conditions
Input leakage current	RES, ports P200	$\lvert I_{in} \rvert$	—	—	1.0	μA	V_{in} = 0 V V_{in} = VCC
	P214, P215, RTCIC0		—	—	1.0	μA	V_{in} = 0 V V_{in} = VRTC
Three-state leakage current (off state)	5V-tolerant ports*1	$\lvert I_{TSI} \rvert$	—	—	1.0	μA	V_{in} = 0 V V_{in} = 5.8 V
	Other ports (except for P200, P214, P215, RTCIC0, and 5V-tolerant ports)		—	—	1.0		V_{in} = 0 V V_{in} = VCC
Input pull-up resistor	All ports (except for P200, P214, P215, RTCIC0)	R_U	10	20	100	kΩ	V_{in} = 0 V
Input capacitance	P200	C_{in}	—	—	30	pF	V_{in} = 0 V, f = 1 MHz T_a = 25 °C
	Other input pins		—	—	15		

Note 1. P301, P302, P400, and P401 (total 4 pins)

43.2.5 Operating and Standby Current

Table 43.10 High-speed mode current

Parameter		Symbol	Typ	Max	Unit	Test Conditions
Maximum*1 *2		ICC*3	—	77.0	mA	ICLK = 80 MHz PCLKA = 80 MHz PCLKB = 40 MHz PCLKC = 40 MHz PCLKD = 80 MHz FCLK = 40 MHz
CoreMark®*4 *5			20.5	—	mA	
			256.3	—	uA/MHz	
Normal mode	All peripheral clocks enabled, and cache disabled. While (1) code is executing from flash*5		29.1	—	mA	
			364.1	—	uA/MHz	
	All peripheral clocks disabled, and cache disabled. While (1) code is executing from flash*4 *5		13.5	—	mA	
			168.3	—	uA/MHz	
Sleep mode	All peripheral clocks enabled, and cache disabled*5		21.2	—	mA	
	All peripheral clocks disabled, and cache disabled*4 *5		5.65	—	mA	
Increase during BGO operation*6			2.67	—	mA	

Note: Supply current is the total current flowing into VCC and VRTC. Supply current values are with all output pins unloaded and all input pull-up MOSs in the off state.
Note: This does not include the BGO operation.
Note 1. Measured with clocks supplied to the peripheral functions.
Note 2. PLL output frequency = 80 MHz. The clock source is MOSC.

Note 3. ICC depends on f (ICLK) as follows (reference data).
ICC Max. = 0.83 × f + 10.44 (max. operation)
ICC Typ. = 0.16 × f + 0.82 (normal operation, all peripheral clocks disabled and cache disabled)
ICC Typ. = 0.22 × f + 3.64 (Sleep mode, all peripheral clocks enabled and cache disabled)
Note 4. PCLKA, PCLKB, PCLKC, and PCLKD are set to divided by 64 (1.25 MHz).
Note 5. PLL is stopped, and HOCO output frequency = 80 MHz
Note 6. This is the increase for programming or erasure of the flash memory for data storage during program execution.

Table 43.11 Middle-speed mode current

Parameter		Symbol	Typ	Max	Unit	Test conditions
Normal mode	All peripheral clocks enabled, and cache disabled. While (1) code is executing from flash	ICC*1	4.49	—	mA	ICLK = 8 MHz PCLKA = 8 MHz PCLKB = 8 MHz PCLKC = 8 MHz PCLKD = 8 MHz FCLK = 8 MHz
	All peripheral clocks disabled, and cache disabled. While (1) code is executing from flash*2		1.79	—		
Sleep mode	All peripheral clocks enabled, and cache disabled		3.50	—		
	All peripheral clocks disabled, and cache disabled*2		0.81	—		
Increase during BGO operation*3			2.10	—		

Note: Supply current is the total current flowing into VCC and VRTC. Supply current values are with all output pins unloaded and all input pull-up MOSs in the off state.
Note: This does not include the BGO operation.
Note: The clock source is MOCO.
Note 1. ICC depends on f (ICLK) as follows (reference data).
ICC Typ. = 0.45 × f + 0.94 (normal operation, all peripheral clocks enabled and cache disabled)
Note 2. PCLKA, PCLKB, PCLKC, and PCLKD are set to divided by 64 (125 kHz).
Note 3. This is the increase for programming or erasure of the flash memory for data storage during program execution.

Table 43.12 Low-speed mode current

Parameter		Symbol	Typ	Max	Unit	Test conditions
Normal mode	All peripheral clocks enabled, and cache disabled. While (1) code is executing from flash	ICC*1	1.20	—	mA	ICLK = 1 MHz PCLKA = 1 MHz PCLKB = 1 MHz PCLKC = 1 MHz PCLKD = 1 MHz FCLK = 1 MHz
	All peripheral clocks disabled, and cache disabled. While (1) code is executing from flash*2		0.38	—		
Sleep mode	All peripheral clocks enabled, and cache disabled		1.07	—		
	All peripheral clocks disabled, and cache disabled*2		0.24	—		

Note: Supply current is the total current flowing into VCC and VRTC. Supply current values are with all output pins unloaded and all input pull-up MOSs in the off state.
Note: This does not include the BGO operation.
Note: The clock source is MOSC.
Note 1. ICC depends on f (ICLK) as follows (reference data).
ICC Typ. = 0.47 × f + 0.43 (normal operation, all peripheral clocks disabled and cache disabled)
Note 2. PCLKA, PCLKB, PCLKC, and PCLKD are set to divided by 64 (15.625 kHz).

Table 43.13 Subosc-speed mode current

Parameter		Symbol	Typ	Max	Unit	Test conditions
Normal mode	All peripheral clocks enabled, and cache disabled. While (1) code is executing from flash	ICC	18.44	—	μA	ICLK = 32.768 kHz PCLKA = 32.768 kHz PCLKB = 32.768 kHz PCLKC = 32.768 kHz PCLKD = 32.768 kHz FCLK = 32.768 kHz
	All peripheral clocks disabled, and cache disabled. While (1) code is executing from flash*1		9.86	—		
Sleep mode	All peripheral clocks enabled, and cache disabled		13.71	—		
	All peripheral clocks disabled, and cache disabled*1		5.17	—		

Note: Supply current is the total current flowing into VCC and VRTC. Supply current values are with all output pins unloaded and all input pull-up MOSs in the off state.
Note: This does not include the BGO operation.
Note: The clock source is LOCO.
Note 1. PCLKA, PCLKB, PCLKC, and PCLKD are set to divided by 64 (512 Hz).

Table 43.14 Software Standby mode current

Parameter		Symbol	Typ	Max	Unit	Test conditions
All SRAMs (0x2000_00 00 to 0x2001_7FFF) are on	Ta = 25 °C	ICC	1.79	—	μA	—
	Ta = 55 °C		5.82	—		
	Ta = 85 °C		22.1	—		
	Ta = 105 °C		50.7	—		
Only 16 KB SRAM (0x2000_0000 to 0x2000_3FFF) is on	Ta = 25 °C		1.73	—		

Note: Supply current values do not include output charge/discharge current from all pins. The values apply when internal pull-up MOS transistors are in the off state. Supply current is the total current flowing into VCC and VRTC.
Note: The IWDT and LVD are not operating.
Note: If you want to operate RTC, add the value of Table 43.15.

Table 43.15 Increase current by RTC operation

Parameter		Symbol	Typ	Max	Unit	Test conditions
SOSC*1 (normal mode)	RTC (normal operation mode)	ICC	1.25	—	μA	SOMCR.SODRV[1:0] = 00b RCR4.ROPSEL = 0
	RTC (low-consumption clock mode)		1.08	—		SOMCR.SODRV[1:0] = 00b RCR4.ROPSEL = 1
SOSC*1 (Low power mode 3)	RTC (normal operation mode)		0.55	—		SOMCR.SODRV[1:0] = 11b RCR4.ROPSEL = 0
	RTC (low-consumption clock mode)		0.38	—		SOMCR.SODRV[1:0] = 11b RCR4.ROPSEL = 1

Note: Supply current values do not include output charge/discharge current from all pins. The values apply when internal pull-up MOS transistors are in the off state. The supply current is total current flowing into VRTC.
Note 1. Includes the sub-clock oscillation circuit current.

Table 43.16 Analog current

Parameter			Symbol	Typ	Max	Unit	Test conditions
Analog power supply current	During 12-bit A/D conversion (at high-speed A/D conversion mode)		I_{AVCC0}	0.50	1	mA	—
	During 12-bit A/D conversion (at low-power A/D conversion mode)			0.27	0.8	mA	—
	Waiting for 12-bit A/D conversion*1			—	4	μA	—
Reference power supply current (VREFH0)	During 12-bit A/D conversion		I_{REFH0}	—	150	μA	—
	Waiting for 12-bit A/D conversion			—	0.30	μA	—
Temperature Sensor (TSN) operating current			I_{TSN}	98	—	μA	—
LCD operating current	External resistance division method*2		I_{LCD}*3	0.04	—	μA	$f_{LCD} = f_{SUB}$ (32.768 kHz) LCD clock = 128 Hz (LCDC0 = 0x07) 1/3 bias four-time-slices VCC = 3.0 V VL4 = 3.0 V
	Internal voltage boosting method	VL1 reference VL1AMP enabled (VLCD = 0x04)		0.68	—	μA	
		VL2 reference VL2AMP enabled (VLCD = 0x84)		0.62	—	μA	
	Capacitor split method	VCC reference		0.12	—	μA	
		VL4 reference VL4AMP enabled		0.63	—	μA	

Note 1. When the MCU is in Software Standby mode or the MSTPCRD.MSTPD16 (ADC120 module-stop bit) is in the module-stop state.

Note 2. Not including the current flowing into the external division resistor when using the external resistance division method.
Note 3. Setting 20 pins as the segment function and blinking all.

Figure 43.2 shows the temperature dependency in Software Standby mode.

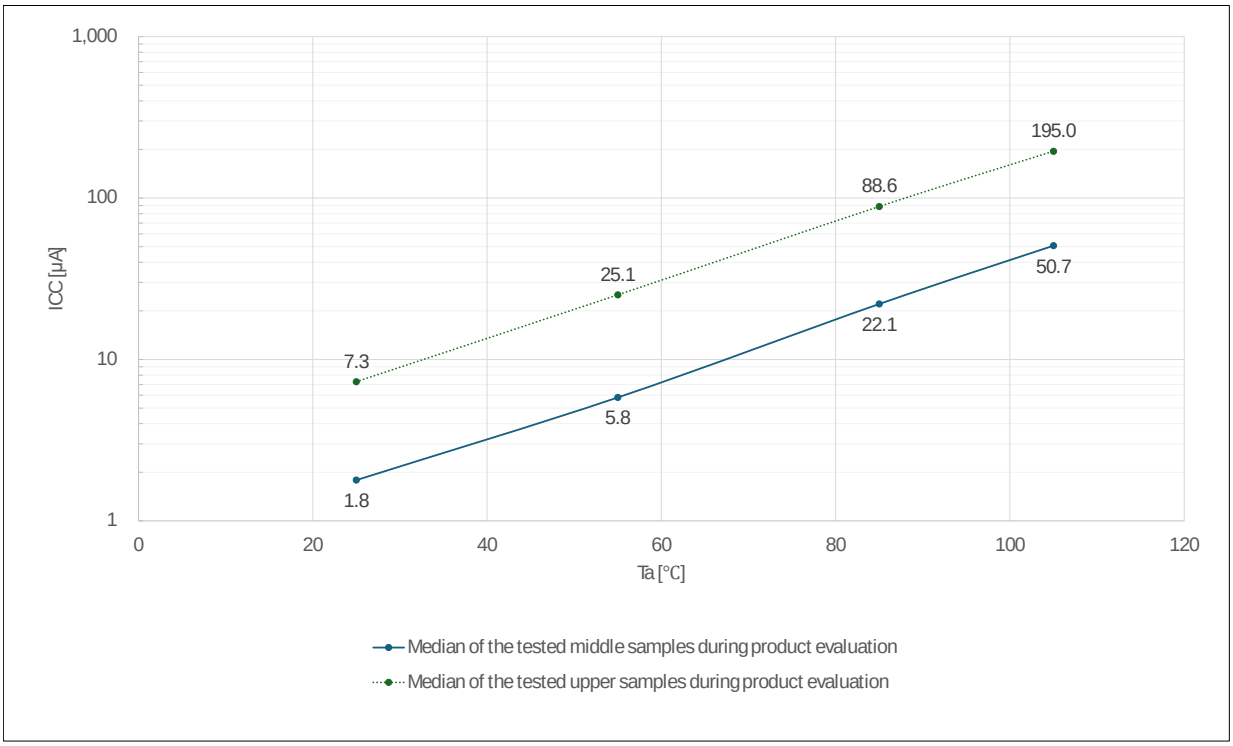

Figure 43.2 Temperature dependency in Software Standby mode (reference data)

Figure 43.3 shows the frequency dependency in High-speed mode (reference data).

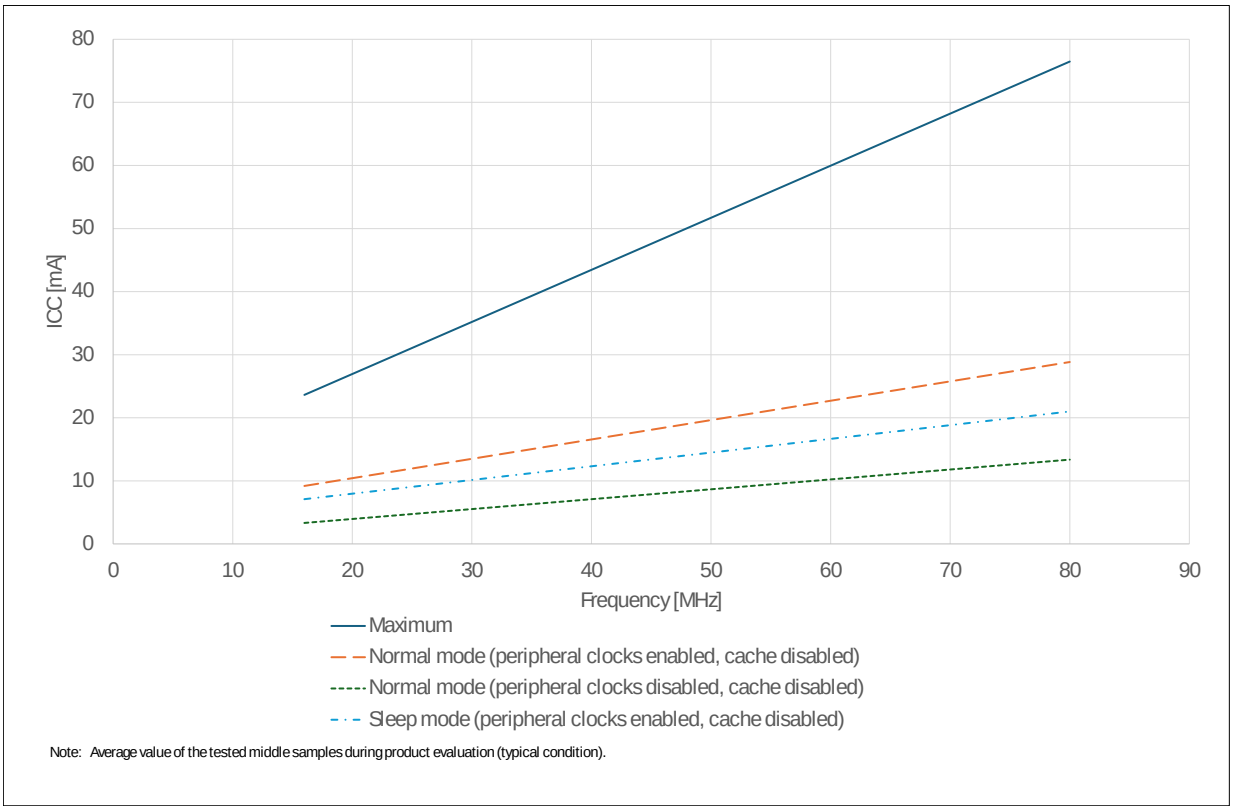

Figure 43.3 Frequency dependency in High-speed mode (reference data)

Figure 43.4 shows the frequency dependency in Middle-speed mode.

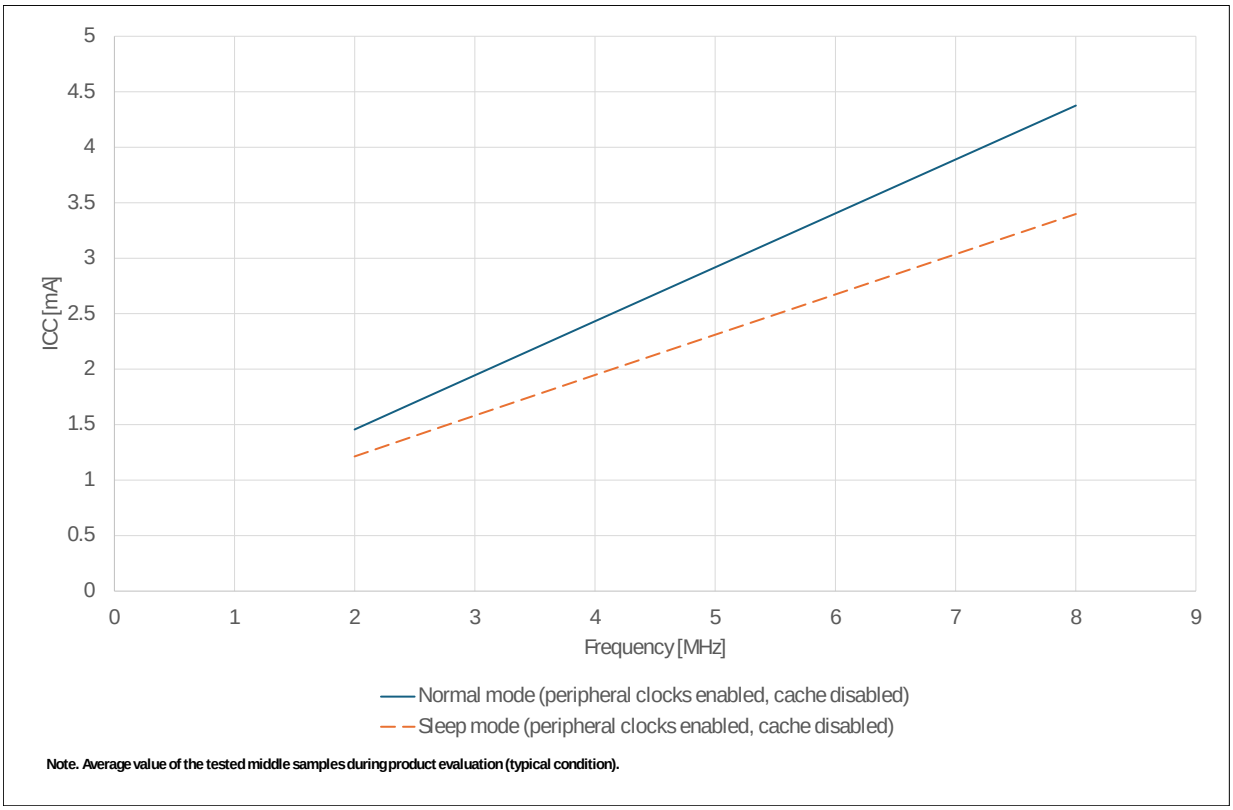

Figure 43.4 Frequency dependency in Middle-speed mode (reference data)

43.2.6 VCC Rise and Fall Gradient and Ripple Frequency

Table 43.17 Rise and fall gradient characteristics

Conditions: VCC = AVCC0 = 0 to 3.6 V

Parameter		Symbol	Min	Typ	Max	Unit	Test conditions
Power-on VCC rising gradient	Voltage monitor 0 reset disabled at startup	SrVCC	0.02	—	2	ms/V	—
	Voltage monitor 0 reset enabled at startup*1 *2				—		
	SCI/SWD boot mode*2				2		

Note 1. When OFS1.LVDAS = 0.
Note 2. At boot mode, the reset from voltage monitor 0 is disabled regardless of the value of OFS1.LVDAS bit.

Table 43.18 Rising and falling gradient and ripple frequency characteristics

Conditions: VCC = AVCC0 = 1.6 to 3.6 V
The ripple voltage must meet the allowable ripple frequency $f_{r(VCC)}$ within the range between the VCC upper limit (3.6 V) and lower limit (1.6 V).
When the VCC change exceeds VCC ± 10%, the allowable voltage change rising and falling gradient dt/dVCC must be met.

Parameter	Symbol	Min	Typ	Max	Unit	Test conditions
Allowable ripple frequency	$f_{r(VCC)}$	—	—	10	kHz	Figure 43.5 $V_{r\ (VCC)}$ ≤ VCC × 0.2
		—	—	1	MHz	Figure 43.5 $V_{r\ (VCC)}$ ≤ VCC × 0.08
		—	—	10	MHz	Figure 43.5 $V_{r\ (VCC)}$ ≤ VCC × 0.06
Allowable voltage change rising and falling gradient	dt/dVCC	1.0	—	—	ms/V	When VCC change exceeds VCC ± 10%

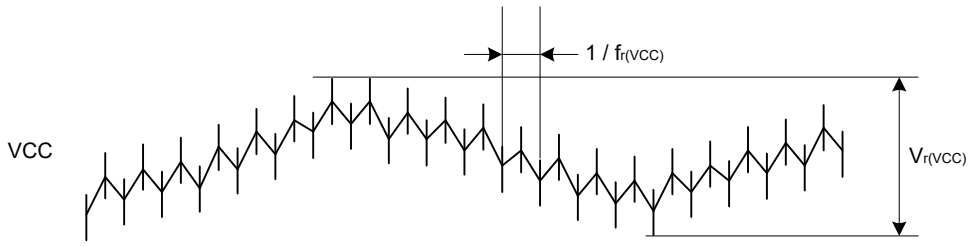

Figure 43.5 Ripple waveform

43.2.7 VRTC Rise and Fall Gradient

Table 43.19 VRTC rise and fall gradient characteristics

Conditions: VRTC = 0 to 3.6 V

Parameter	Symbol	Min	Typ	Max	Unit	Test conditions
Power-on VRTC rising gradient	SrVRTC	0.02	—	20	ms/V	—

43.2.8 Thermal Characteristics

Maximum value of junction temperature (Tj) must not exceed the value of section 43.2.1. Tj/Ta Definition.

Tj is calculated by either of the following equations.

- Tj = Ta + θja × Total power consumption
- Tj = Tt + Ψjt × Total power consumption

  Tj : Junction temperature (°C)

  Ta : Ambient temperature (°C)

  Tt : Top center case temperature (°C)

  θja : Thermal resistance of “Junction”-to-“Ambient” (°C/W)

  Ψjt : Thermal resistance of “Junction”-to-“Top center case” (°C/W)
- Total power consumption = Voltage × (Leakage current + Dynamic current)
- Leakage current of IO = Σ (IOL × VOL) / Voltage + Σ (|IOH| × |VCC – VOH|) / Voltage
- Dynamic current of IO = Σ IO (Cin + Cload) × IO switching frequency × Voltage

  Cin: Input capacitance

  Cload: Output capacitance

Regarding θja and Ψjt, see Table 43.20.

Table 43.20 Thermal resistance

Parameter	Package	Symbol	Value*1	Unit	Test conditions
Thermal resistance	64-pin LQFP	θja	43.8	°C/W	JESD 51-2 and 51-7 compliant
	100-pin LQFP		44.3		
	64-pin LQFP	Ψjt	0.70	°C/W	JESD 51-2 and 51-7 compliant
	100-pin LQFP		0.70		

Note 1. The values are reference values when the 4-layer board is used. Thermal resistance depends on the number of layers or size of the board. For details, see the JEDEC standards.

43.2.8.1 Calculation Guide of ICCmax

Table 43.21 shows the power consumption of each unit and Table 43.22 shows the outline of operation for each unit.

Table 43.21 Power consumption of each unit

Dynamic current/ Leakage current	MCU Domain	Category	Item	Frequency [MHz]	Current [μA/ MHz]	Current*1 [mA]
Leakage current	Analog	LDO and Leak*2	Ta = 25 °C*3	—	—	2.54
			Ta = 55 °C*3	—	—	2.59
			Ta = 75 °C*3	—	—	2.68
			Ta = 85 °C*3	—	—	2.76
			Ta = 95 °C*3	—	—	2.88
			Ta = 105 °C*3	—	—	3.07
Dynamic current	CPU	Operation with Flash and SRAM	Coremark	80	271	21.7
	Peripheral Unit	Timer	GPT16 (4ch)*4	80	18.7	1.49
			GPT32 (2ch)*4	80	10.8	0.86
			POEG (4 Groups)*4	40	4.82	0.19
			AGT (2ch)*4	40	8.03	0.32
			RTC*6	40	4.54	0.18
			WDT	40	2.36	0.09
			IWDT	40	0.78	0.03
		Communication interfaces	SCI (6ch)*4	80	47.8	3.82
			IrDA*5	80	7.88	0.63
			IIC (2ch)*4	40	10.2	0.41
			CANFD	40	19.0	0.76
			SPI (3ch)*4	80	27.6	2.21
			QSPI	80	5.99	0.48
			UARTA (2ch)*4	40	15.3	0.61
		Analog	ADC12	80	6.26	0.50
		Human machine interfaces	SLCDC	40	7.96	0.32
		Event link	ELC	40	2.01	0.08
		Security	RSIP-E31A	40	488	19.5
		Data processing	CRC	80	5.64	0.45
			DOC	80	0.79	0.06
		System	CAC	40	2.88	0.12
		DMA	DMAC (per 1ch)	80	23.6	1.89
			DTC	80	22.3	1.78

Note 1. The values are guaranteed by design.
Note 2. LDO and Leak are internal voltage regulator's current and MCU's leakage current. It is selected according to the temperature of Ta.
Note 3. Δ(Tj-Ta) = 20 °C is considered to measure the current.
Note 4. To determine the current consumption per channel, group or unit, divide Current [mA] by the number of channels, groups or units.
Note 5. Includes current for 1 channel of SCI.
Note 6. RTC operationg current flow into VRTC power supply.

Table 43.22 Outline of operation for each unit

Peripheral	Outline of operation
GPT	Operating modes is set to saw-wave PWM mode. GPT is operating with PCLKD.
POEG	Only clear module stop bit.
AGT	AGT is operating with PCLKB.
RTC	RTC is operating with SOSC.
WDT	WDT is operating with PCLKB.
IWDT	IWDT is operating with IWDTCLK.
SCI	SCI is transmitting data in clock synchronous mode.
IrDA	SCI is transmitting data in clock asynchronous mode. IrDA is only clear module stop bit.
IIC	Communication format is set to I2C-bus format. IIC is transmitting data in master mode.
CANFD	CANFD is transmitting and receiving data in self-test mode 1.
SPI	SPI mode is set to SPI operation (4-wire method). SPI master/slave mode is set to master mode. SPI is transmitting 32-bit width data.
QSPI	QSPI is issuing Fast Read Quad I/O Instruction.
UARTA	UARTA is transmitting 8-bit width data.
ADC12	Resolution is set to 12-bit accuracy. Data registers is set to A/D-converted value addition mode. ADC12 is converting the analog input in continuous scan mode.
SLCDC	SLCDC is operating in A wave, 1/2 bias method, 2-time slice and External resistance division method.
ELC	Only clear module stop bit.
RSPI-E31A	RSIP is doing self-test operation.
CRC	CRC is generating CRC code using 32-bit CRC32-C polynomial.
DOC	DOC is operating in data comparison mode.
CAC	Measurement target clocks is set to PCLKB. Measurement reference clocks is set to PCLKB. CAC is measuring the clock frequency accuracy.
DMAC	Bit length of transfer data is set to 32 bits. Transfer mode is set to block transfer mode. DMAC is transferring data from SRAM0 to SRAM0.
DTC	Bit length of transfer data is set to 32 bits. Transfer mode is set to block transfer mode. DTC is transferring data from SRAM0 to SRAM0.

43.3 AC Characteristics

43.3.1 Frequency

Table 43.23 Operation frequency in high-speed operating mode

Conditions: VCC = AVCC0 = 1.6 to 3.6 V

Parameter			Symbol	Min	Typ	Max*5	Unit
Operation frequency	System clock (ICLK)*1 *2 *4	1.8 to 3.6 V	f	0.03277	—	80*6	MHz
		1.6 to 1.8 V		0.03277	—	4	
	Peripheral module clock (PCLKA)*4	1.8 to 3.6 V		—	—	80*6	
		1.6 to 1.8 V		—	—	4	
	Peripheral module clock (PCLKB)*4	1.8 to 3.6 V		—	—	40	
		1.6 to 1.8 V		—	—	4	
	Peripheral module clock (PCLKC)*3 *4	1.8 to 3.6 V		—	—	48	
		1.6 to 1.8 V		—	—	4	
	Peripheral module clock (PCLKD)*4	1.8 to 3.6 V		—	—	80*6	
		1.6 to 1.8 V		—	—	4	
	Flash IF clock (FCLK)*4	1.8 to 3.6 V		—	—	48	
		1.6 to 1.8 V		—	—	4	

Note: Set LDOCR.CHG0 = 0 when ICLK < 8MHz, and LDOCR.CHG0 = 1 when 8MHz ≤ ICLK.

Note 1. The lower-limit frequency of ICLK is 1 MHz while programming or erasing the flash memory. When using ICLK for programming or erasing the flash memory at below 4 MHz, the frequency can be set to 1 MHz, 2 MHz, or 3 MHz. A non-integer frequency such as 1.5 MHz cannot be set.

Note 2. The frequency accuracy of ICLK must be ± 1.0% during programming or erasing the flash memory. Confirm the frequency accuracy of the clock source.

Note 3. The lower-limit frequency of PCLKD is 1 MHz when the ADC12 is in use.

Note 4. See section 8, Clock Generation Circuit for the relationship of frequencies between ICLK, PCLKA, PCLKB, PCLKC, PCLKD, and FCLK.

Note 5. The maximum value of operation frequency does not include internal oscillator errors. For details on the range for guaranteed operation, see Table 43.27.

Note 6. This is the condition when Tj = 105 °C. Specifications at Tj = 125 °C are 79.2 MHz.

Table 43.24 Operation frequency in middle-speed mode

Conditions: VCC = AVCC0 = 1.6 to 3.6 V

Parameter			Symbol	Min	Typ	Max*5	Unit
Operation frequency	System clock (ICLK)*1 *2 *4	1.8 to 3.6 V	f	0.03277	—	8	MHz
		1.6 to 1.8 V		0.03277	—	4	
	Peripheral module clock (PCLKA)*4	1.8 to 3.6 V		—	—	8	
		1.6 to 1.8 V		—	—	4	
	Peripheral module clock (PCLKB)*4	1.8 to 3.6 V		—	—	8	
		1.6 to 1.8 V		—	—	4	
	Peripheral module clock (PCLKC)*3 *4	1.8 to 3.6 V		—	—	8	
		1.6 to 1.8 V		—	—	4	
	Peripheral module clock (PCLKD)*4	1.8 to 3.6 V		—	—	8	
		1.6 to 1.8 V		—	—	4	
	Flash IF clock (FCLK)*4	1.8 to 3.6 V		—	—	8	
		1.6 to 1.8 V		—	—	4	

Note 1. The lower-limit frequency of ICLK is 1 MHz while programming or erasing the flash memory. When using ICLK for programming or erasing the flash memory at below 4 MHz, the frequency can be set to 1 MHz, 2 MHz, or 3 MHz. A non-integer frequency such as 1.5 MHz cannot be set.

Note 2. The frequency accuracy of ICLK must be ± 1.0% during programming or erasing the flash memory. Confirm the frequency accuracy of the clock source.

Note 3. The lower-limit frequency of PCLKC is 1 MHz when the ADC12 is in use.

Note 4. See section 8, Clock Generation Circuit for the relationship of frequencies between ICLK, PCLKA, PCLKB, PCLKC, PCLKD, and FCLK.

Note 5. The maximum value of operation frequency does not include internal oscillator errors. For details on the range for guaranteed operation, see Table 43.27.

Table 43.25 Operation frequency in low-speed mode

Conditions: VCC = AVCC0 = 1.6 to 3.6 V

Parameter			Symbol	Min	Typ	Max*5	Unit
Operation frequency	System clock (ICLK)*1 *2 *4	1.6 to 3.6 V	f	0.03277	—	1	MHz
	Peripheral module clock (PCLKA)*4	1.6 to 3.6 V		—	—	1	
	Peripheral module clock (PCLKB)*4	1.6 to 3.6 V		—	—	1	
	Peripheral module clock (PCLKC)*3 *4	1.6 to 3.6 V		—	—	1	
	Peripheral module clock (PCLKD)*4	1.6 to 3.6 V		—	—	1	
	Flash IF clock (FCLK)*4	1.6 to 3.6 V		—	—	1	

Note 1. The lower-limit frequency of ICLK is 1 MHz while programming or erasing the flash memory. When using ICLK for programming or erasing the flash memory at below 4 MHz, the frequency can be set to 1 MHz, 2 MHz, or 3 MHz. A non-integer frequency such as 1.5 MHz cannot be set.
Note 2. The frequency accuracy of ICLK must be ± 1.0% during programming or erasing the flash memory. Confirm the frequency accuracy of the clock source.
Note 3. The lower-limit frequency of PCLKC is 1 MHz when the ADC12 is in use.
Note 4. See section 8, Clock Generation Circuit for the relationship of frequencies between ICLK, PCLKA, PCLKB, PCLKC, PCLKD, and FCLK.
Note 5. The maximum value of operation frequency does not include internal oscillator errors. For details on the range for guaranteed operation, see Table 43.27.

Table 43.26 Operation frequency in Subosc-speed mode

Conditions: VCC = AVCC0 = 1.6 to 3.6 V

Parameter			Symbol	Min	Typ	Max	Unit
Operation frequency	System clock (ICLK)*1 *3	1.6 to 3.6 V	f	27.8528	32.768	37.6832	kHz
	Peripheral module clock (PCLKA)	1.6 to 3.6 V		—	—	37.6832	
	Peripheral module clock (PCLKB)*3	1.6 to 3.6 V		—	—	37.6832	
	Peripheral module clock (PCLKC)	1.6 to 3.6 V		—	—	37.6832	
	Peripheral module clock (PCLKD)*2 *3	1.6 to 3.6 V		—	—	37.6832	
	Flash IF clock (FCLK)*3	1.6 to 3.6 V		—	—	37.6832	

Note 1. Programming and erasing the flash memory is not possible.
Note 2. The ADC12 cannot be used.
Note 3. See section 8, Clock Generation Circuit for the relationship of frequencies between ICLK, PCLKA, PCLKB, PCLKC, PCLKD, and FCLK.

43.3.2 Clock Timing

Table 43.27 Clock timing (1 of 2)

Parameter	Symbol	Min	Typ	Max	Unit	Test conditions
EXTAL external clock input cycle time	t_{Xcyc}	50	—	—	ns	Figure 43.6
EXTAL external clock input high pulse width	t_{XH}	20	—	—	ns	
EXTAL external clock input low pulse width	t_{XL}	20	—	—	ns	
EXTAL external clock rising time	t_{Xr}	—	—	5	ns	
EXTAL external clock falling time	t_{Xf}	—	—	5	ns	
EXTAL external clock input wait time*1	t_{EXWT}	0.3	—	—	μs	—
EXTAL external clock input frequency	f_{EXTAL}	—	—	20	MHz	1.8 ≤ VCC ≤ 3.6
		—	—	4		1.6 ≤ VCC < 1.8
Main clock oscillator oscillation frequency	f_{MAIN}	1	—	20	MHz	1.8 ≤ VCC ≤ 3.6
		1	—	4		1.6 ≤ VCC < 1.8

Table 43.27 Clock timing (2 of 2)

Parameter	Symbol	Min	Typ	Max	Unit	Test conditions
LOCO clock oscillation frequency	f_{LOCO}	27.853	32.77	37.683	kHz	—
LOCO clock oscillation stabilization time	t_{LOCO}	—	—	100	μs	Figure 43.7
IWDT-dedicated clock oscillation frequency	f_{ILOCO}	12.75	15	17.25	kHz	—
MOCO clock oscillation frequency	f_{MOCO}	6.8	8	9.2	MHz	—
MOCO clock oscillation stabilization time	t_{MOCO}	—	—	1	μs	—
HOCO clock oscillation frequency	f_{HOCO24}	23.76	24	24.24	MHz	—
	f_{HOCO32}	31.68	32	32.32		—
	f_{HOCO40}	39.6	40	40.4		—
	f_{HOCO48}	47.52	48	48.48		—
	f_{HOCO64}	63.36	64	64.64		—
	f_{HOCO80}	79.2	80	80.8		—
HOCO clock oscillation stabilization time*3	t_{HOCO}	—	1.9	—	μs	Figure 43.8
PLL clock frequency	f_{PLL}	24	—	80	MHz	—
PLL clock oscillation stabilization time	t_{PLL}	—	—	70	μs	Figure 43.9
PLL_RTC clock frequency	f_{PLLR}	—	26	—	MHz	—
PLL_RTC clock oscillation stabilization time	t_{PLLR}	—	—	10	ms	Figure 43.10
Sub-clock oscillator oscillation frequency*4	f_{SUB}	—	32.77	—	kHz	—
Sub-clock oscillation stabilization time*2	t_{SUBOSC}	—	0.5	—	s	Figure 43.11

Note 1. Time until the clock can be used after the Main Clock Oscillator stop bit (MOSCCR.MOSTP) is set to 0 (operating) when the external clock is stable.

Note 2. After changing the setting of the SOSCCR.SOSTP bit to start sub-clock oscillator operation, only start using the sub-clock oscillator after the sub-clock oscillation stabilization time elapsed. Use the oscillator wait time value recommended by the oscillator manufacturer.

Note 3. This is the time from release from reset state until the HOCO oscillation frequency (f_{HOCO}) reaches the range for guaranteed operation.

Note 4. The power supply of sub-clock oscillator is VRTC.

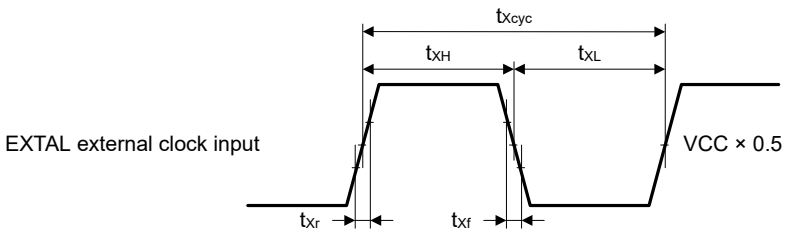

Figure 43.6 EXTAL external clock input timing

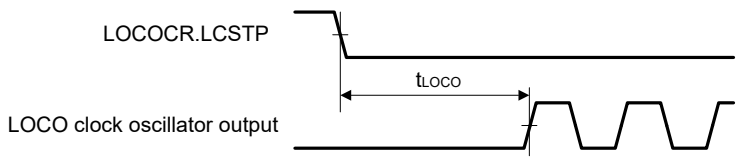

Figure 43.7 LOCO clock oscillation start timing

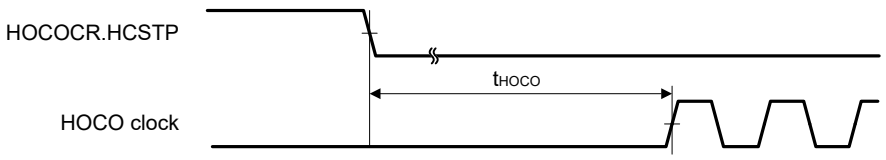

Figure 43.8 HOCO clock oscillation start timing (started by setting the HOCOCR.HCSTP bit)

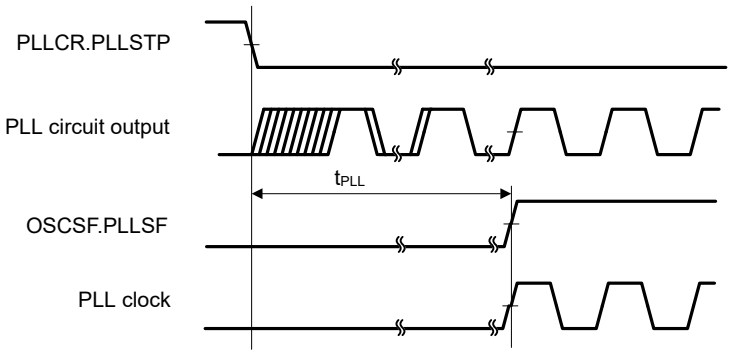

Figure 43.9 PLL clock oscillation start timing (PLL is operated after main clock oscillation has settled)

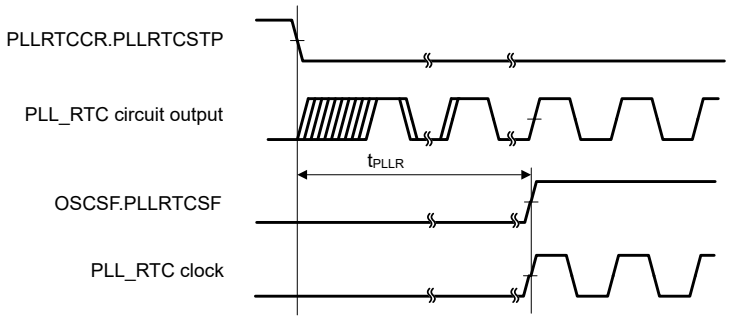

Figure 43.10 PLL_RTC clock oscillation start timing (PLL_RTC is operated after sub-clock oscillation has settled)

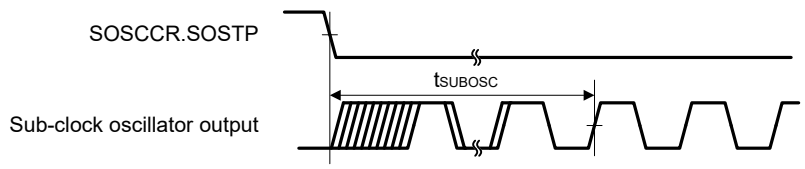

Figure 43.11 Sub-clock oscillation start timing

43.3.3 Reset Timing

Table 43.28 Reset timing

Parameter		Symbol	Min	Typ	Max	Unit	Test conditions
RES pulse width	At power-on	t_{RESWP}	13	—	—	ms	Figure 43.12
	Not at power-on	t_{RESW}	30	—	—	μs	Figure 43.13
Wait time after RES cancellation (at power-on)	LVD0 enabled*1	t_{RESWT}	—	1.0	—	ms	Figure 43.12
	LVD0 disabled*2		—	0.3	—		
Wait time after RES cancellation (during powered-on state)	LVD0 enabled*1	t_{RESWT2}	—	0.9	—	ms	Figure 43.13
	LVD0 disabled*2		—	0.2	—		
Wait time after internal reset cancellation (IWDT reset, WDT reset, RAM parity error reset, RAM ECC error reset, Bus master MPU error reset, TrustZonre error reset, Cache parity error reset, Software reset)	LVD0 enabled*1	t_{RESWT3}	—	0.9	—	ms	Figure 43.14
	LVD0 disabled*2		—	0.2	—		

Note 1. When OFS1.LVDAS = 0.
Note 2. When OFS1.LVDAS = 1.

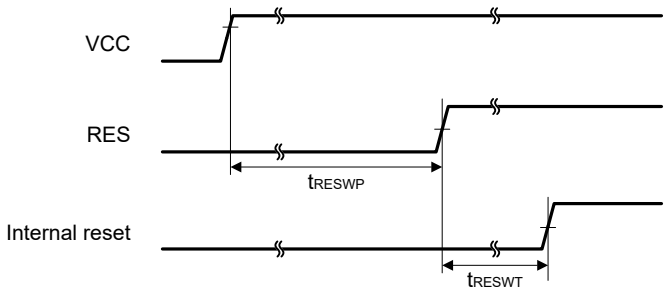

Figure 43.12 Reset input timing at power-on

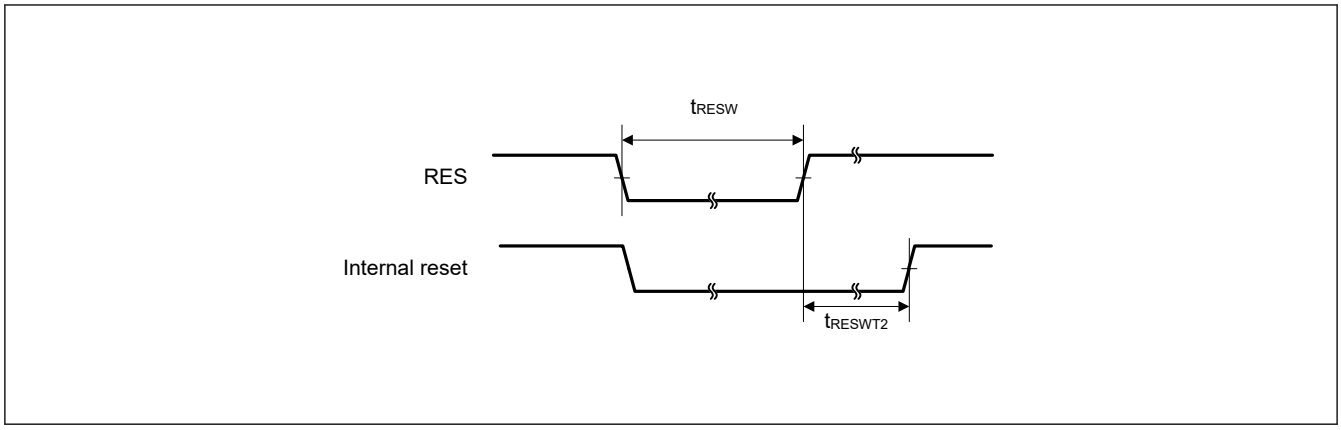

Figure 43.13 Reset input timing (1)

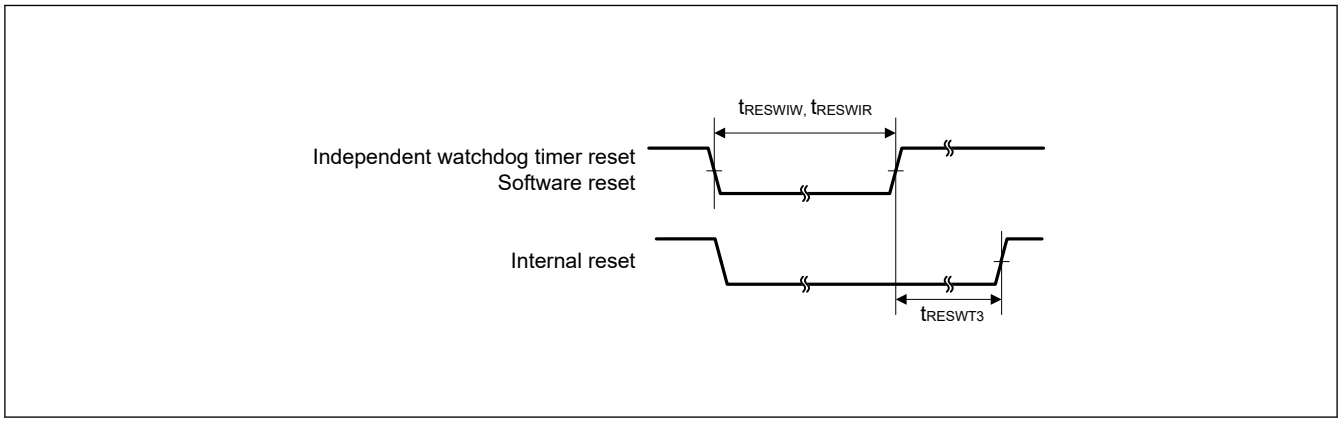

Figure 43.14 Reset input timing (2)

43.3.4 Wakeup Time

Table 43.29 Timing of recovery from low power modes (1)

Parameter				Symbol	Min	Typ	Max	Unit	Test conditions
Recovery time from Software Standby mode*1	High-speed mode	Crystal resonator connected to main clock oscillator	System clock source is main clock oscillator (20 MHz)*2 *4	t_{SBYMC}	—	2.1	2.7	ms	Figure 43.15
			System clock source is PLL (48 MHz) with Main clock oscillator*2 *5	t_{SBYPC}	—	2.1	2.8	ms	
		External clock input to main clock oscillator	System clock source is main clock oscillator (20 MHz)*3 *4	t_{SBYEX}	—	8.5	11	μs	
			System clock source is PLL (48 MHz) with Main clock oscillator*3 *5	t_{SBYEX}	—	66	85	μs	
		System clock source is HOCO (HOCO clock is 32 MHz)*6		t_{SBYHO}	—	13.5	17.8	μs	
		System clock source is HOCO (HOCO clock is 48 MHz)*5		t_{SBYHO}	—	13.2	17.5	μs	
		System clock source is MOCO (8 MHz)*7		t_{SBYMO}	—	3.5	5.1	μs	

Note 1. The division ratio of ICLK, FCLK, and PCLKx is the minimum division ratio within the allowable frequency range. The recovery time is determined by the system clock source.
Note 2. The Main Clock Oscillator Wait Control Register (MOSCWTCR) is set to 0x05.
Note 3. The Main Clock Oscillator Wait Control Register (MOSCWTCR) is set to 0x00.
Note 4. The ICLK is 20 MHz
Note 5. The ICLK is 48 MHz

Note 6. The ICLK is 32 MHz
Note 7. The ICLK is 8 MHz

Table 43.30 Timing of recovery from low power modes (2)

Parameter				Symbol	Min	Typ	Max	Unit	Test conditions
Recovery time from Software Standby mode*1	Middle speed mode	Crystal resonator connected to main clock oscillator	System clock source is main clock oscillator (20 MHz)*2 *4	t_{SBYMC}	—	2.1	2.7	ms	Figure 43.15
		External clock input to main clock oscillator	System clock source is main clock oscillator (20 MHz)*3 *4 VCC = 1.8 V to 3.6 V	t_{SBYEX}	—	6	7.4	μs	
			System clock source is main clock oscillator (4 MHz)*3 *5 VCC = 1.6 V to 1.8 V		—	7.3	8.8	μs	
		System clock source is HOCO (32 MHz) *4	VCC = 1.8 V to 3.6 V*6	t_{SBYHO}	—	10	13	μs	
			VCC = 1.6 V to 1.8 V*7		—	13	16		
		System clock source is MOCO (8 MHz)	VCC = 1.8 V to 3.6 V*8	t_{SBYMO}	—	3.5	5.1	μs	
			VCC = 1.6 V to 1.8 V*9		—	6.3	8.7		

Note 1. The division ratio of ICLK, FCLK and PCLKx is the minimum division ratio within the allowable frequency range. The recovery time is determined by the system clock source.
Note 2. The Main Clock Oscillator Wait Control Register (MOSCWTCR) is set to 0x05.
Note 3. The Main Clock Oscillator Wait Control Register (MOSCWTCR) is set to 0x00.
Note 4. The ICLK is 5 MHz (20 MHz/4)
Note 5. The ICLK is 4 MHz
Note 6. The ICLK is 8 MHz (32 MHz/4)
Note 7. The ICLK is 4 MHz (32 MHz/8)
Note 8. The ICLK is 8 MHz
Note 9. The ICLK is 4 MHz (8 MHz/2)

Table 43.31 Timing of recovery from low power modes (3)

Parameter				Symbol	Min	Typ	Max	Unit	Test conditions
Recovery time from Software Standby mode*1	Low speed mode	Crystal resonator connected to main clock oscillator	System clock source is main clock oscillator (20 MHz)*2 *4	t_{SBYMC}	—	2.1	2.7	ms	Figure 43.15
		External clock input to main clock oscillator	System clock source is main clock oscillator (20 MHz)*3 *4	t_{SBYEX}	—	41	46	μs	
		System clock source is MOCO (8 MHz)*5		t_{SBYMO}	—	23	30	μs	

Note 1. The division ratio of ICLK, FCLK and PCLKx is the minimum division ratio within the allowable frequency range. The recovery time is determined by the system clock source.
Note 2. The Main Clock Oscillator Wait Control Register (MOSCWTCR) is set to 0x05.
Note 3. The Main Clock Oscillator Wait Control Register (MOSCWTCR) is set to 0x00.
Note 4. The ICLK is 0.625 MHz (20/32 MHz)
Note 5. The ICLK is 1 MHz (8 MHz/8)

Table 43.32 Timing of recovery from low power modes (4)

Parameter			Symbol	Min	Typ	Max	Unit	Test conditions
Recovery time from Software Standby mode*1	Subosc-speed mode	System clock source is sub-clock oscillator (32.768 kHz)	t_{SBYSC}	—	0.8	0.9	ms	Figure 43.15
		System clock source is LOCO (32.768 kHz)	t_{SBYLO}	—	0.8	1	ms	

Note 1. The sub-clock oscillator or LOCO itself continues oscillating in Software Standby mode during Subosc-speed mode.

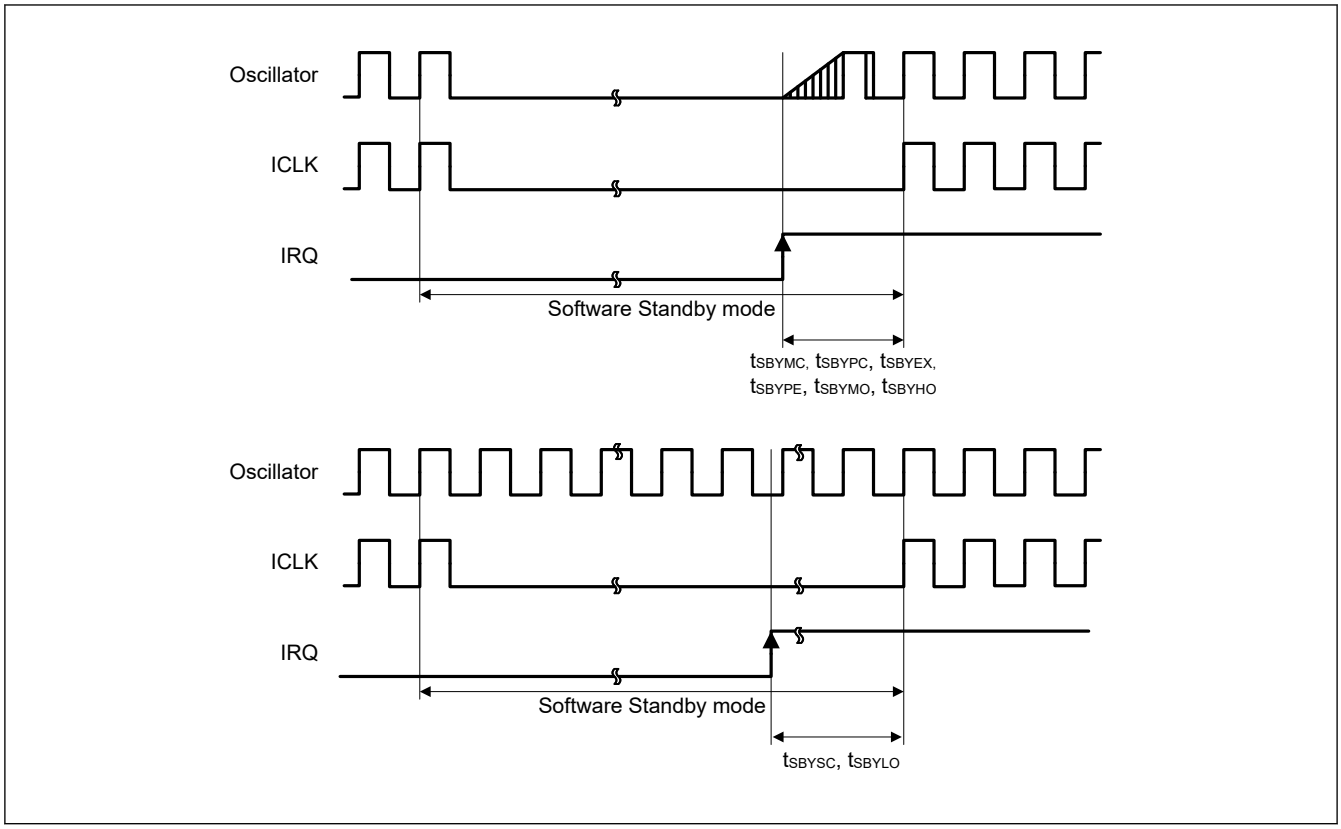

Figure 43.15 Software Standby mode cancellation timing

Table 43.33 Timing of recovery from low power modes (5)

Parameter		Symbol	Min	Typ	Max	Unit	Test conditions
Recovery time from Software Standby mode*1	High-speed mode System clock source is HOCO (32 MHz)*1	t_{SNZ}	—	7.4	9.3	μs	Figure 43.16
	Middle-speed mode System clock source is HOCO (24 MHz)*2 VCC = 1.8 V to 3.6 V	t_{SNZ}	—	8.3	10.4	μs	
	Middle-speed mode System clock source is HOCO (24 MHz)*3 VCC = 1.6 V to 1.8 V	t_{SNZ}	—	9.5	11.8	μs	
	Low-speed mode System clock source is MOCO (8 MHz)*4	t_{SNZ}	—	11.8	15.6	μs	

Note 1. The ICLK is 32 MHz
Note 2. The ICLK is 8 MHz (24 MHz/4)
Note 3. The ICLK is 4 MHz (24 MHz/8)
Note 4. The ICLK is 1 MHz (8 MHz/8)

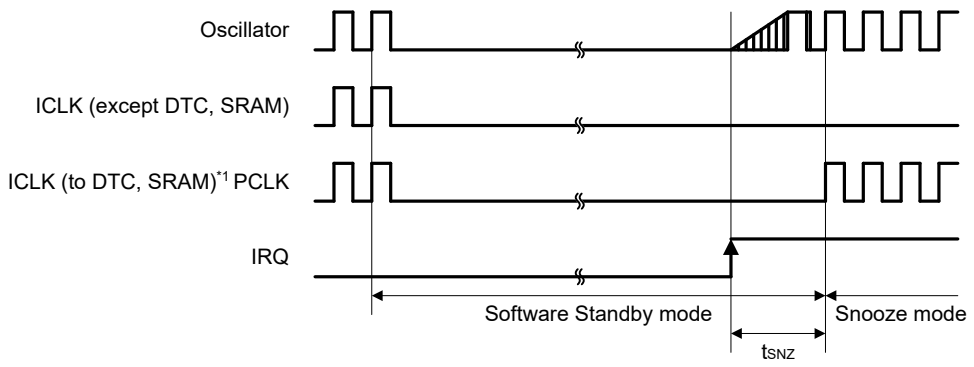

Note 1. When SNZCR.SNZDTCEN bit is set to 1, ICLK is supplied to DTC and SRAM.

Figure 43.16 Recovery timing from Software Standby mode to Snooze mode

43.3.5 NMI and IRQ Noise Filter

Table 43.34 NMI and IRQ noise filter

Parameter	Symbol	Min	Typ	Max	Unit	Test conditions	
NMI pulse width	t_{NMIW}	200	—	—	ns	NMI digital filter disabled	$t_{Pcyc} \times 2 \leq 200$ ns
		$t_{Pcyc} \times 2$*1	—	—			$t_{Pcyc} \times 2 > 200$ ns
		200	—	—		NMI digital filter enabled	$t_{NMICK} \times 3 \leq 200$ ns
		$t_{NMICK} \times 3.5$*2	—	—			$t_{NMICK} \times 3 > 200$ ns
IRQ pulse width	t_{IRQW}	200	—	—	ns	IRQ digital filter disabled	$t_{Pcyc} \times 2 \leq 200$ ns
		$t_{Pcyc} \times 2$*1	—	—			$t_{Pcyc} \times 2 > 200$ ns
		200	—	—		IRQ digital filter enabled	$t_{IRQCK} \times 3 \leq 200$ ns
		$t_{IRQCK} \times 3.5$*3	—	—			$t_{IRQCK} \times 3 > 200$ ns

Note: 200 ns minimum in Software Standby mode.
Note: If the clock source is being switched it is needed to add 4 clock cycle of switched source.
Note 1. t_{Pcyc} indicates the PCLKB cycle.
Note 2. t_{NMICK} indicates the cycle of the NMI digital filter sampling clock.
Note 3. t_{IRQCK} indicates the cycle of the IRQi digital filter sampling clock (i = 0 to 7).

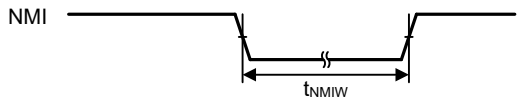

Figure 43.17 NMI interrupt input timing

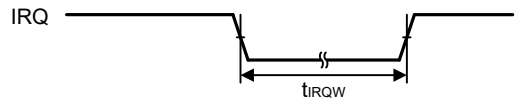

Figure 43.18 IRQ interrupt input timing

43.3.6 I/O Ports, POEG, GPT, AGT, and ADC12 Trigger Timing

Table 43.35 I/O Ports, POEG, GPT, AGT, and ADC12 trigger timing

Parameter			Symbol	Min	Max	Unit	Test conditions
I/O Ports	Input data pulse width	2.7 V ≤ VCC ≤ 5.5 V	t_{PRW}	2	—	t_{Pcyc}	Figure 43.19
		2.4 V ≤ VCC < 2.7 V		3			
		1.6 V ≤ VCC < 2.4 V		4			
POEG	POEG input trigger pulse width		t_{POEW}	3	—	t_{Pcyc}	Figure 43.20
GPT	Input capture pulse width	Single edge	t_{GTICW}	1.5	—	t_{PDcyc}	Figure 43.21
		Dual edge		2.5	—		
AGT	AGTIO, AGTEE input cycle	1.8 V ≤ VCC ≤ 5.5 V	t_{ACYC} *1	250	—	ns	Figure 43.22
		1.6 V ≤ VCC < 1.8 V		2000	—	ns	
	AGTIO, AGTEE input high-level width, low-level width	1.8 V ≤ VCC ≤ 5.5 V	t_{ACKWH}, t_{ACKWL}	100	—	ns	
		1.6 V ≤ VCC < 1.8 V		800	—	ns	
	AGTIO, AGTO, AGTOA, AGTOB output cycle	2.7 V ≤ VCC ≤ 5.5 V	t_{ACYC2}	62.5	—	ns	Figure 43.22
		2.4 V ≤ VCC < 2.7 V		125	—	ns	
		1.8 V ≤ VCC < 2.4 V		250	—	ns	
		1.6 V ≤ VCC < 1.8 V		500	—	ns	
ADC12	12-bit A/D converter trigger input pulse width		t_{TRGW}	1.5	—	t_{Pcyc}	Figure 43.23

Note 1. Constraints on AGTIO input: t_{Pcyc} × 2 (t_{Pcyc}: PCLKB cycle) < t_{ACYC}.

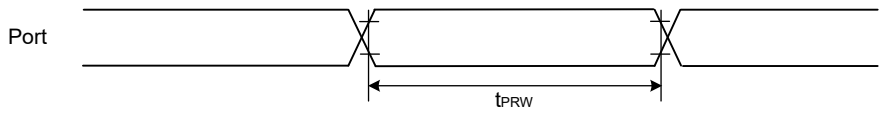

Figure 43.19 I/O ports input timing

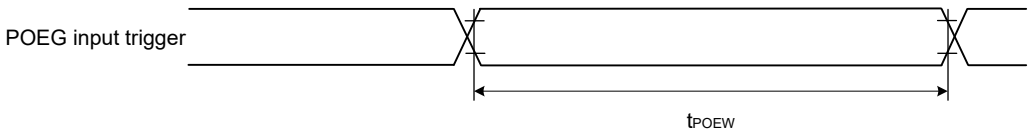

Figure 43.20 POEG input trigger timing

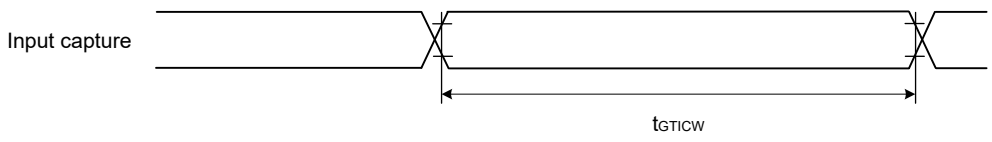

Figure 43.21 GPT input capture timing

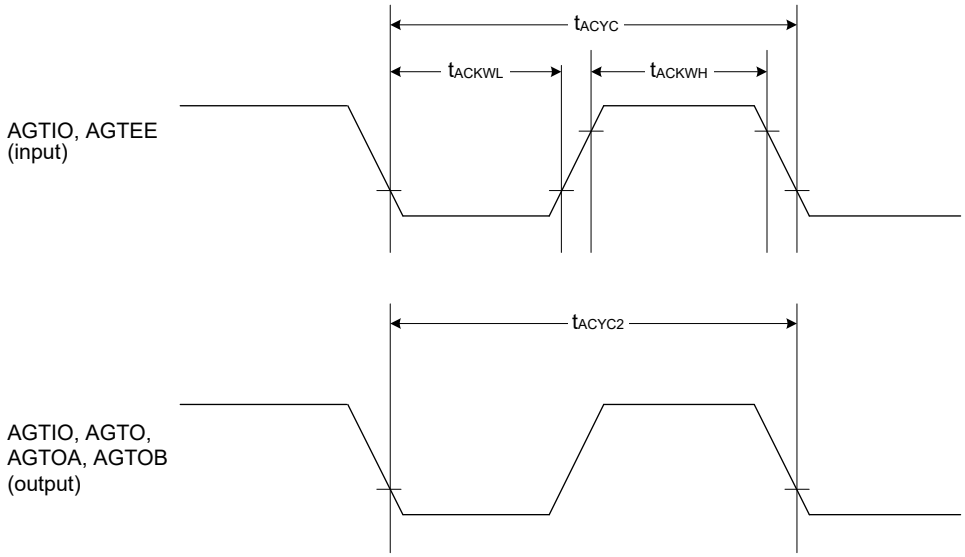

Figure 43.22 AGT I/O timing

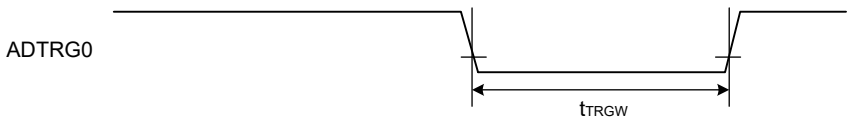

Figure 43.23 ADC12 trigger input timing

43.3.7 CAC Timing

Table 43.36 CAC timing

Parameter		Symbol	Min	Typ	Max	Unit	Test conditions
CACREF input pulse width	$t_{PBcyc} \leq t_{CAC}$ *1	t_{CACREF}	$4.5 \times t_{CAC} + 3 \times t_{PBcyc}$	—	—	ns	—
	$t_{PBcyc} > t_{CAC}$ *1		$5 \times t_{CAC} + 6.5 \times t_{PBcyc}$	—	—	ns	

Note: t_{PBcyc}: PCLKB cycle.
Note 1. t_{CAC}: CAC count clock source cycle.

43.3.8 SCI Timing

Table 43.37 SCI timing (1) (1 of 2)

Conditions: VCC = AVCC0 = 1.6 to 3.6 V

Parameter				Symbol	Min	Max	Unit	Test conditions
SCI	Input clock cycle	Asynchronous	2.7 V ≤ VCC ≤ 3.6 V	t_{Scyc}	75	—	ns	Figure 43.24
			2.4 V ≤ VCC < 2.7 V		150	—		
			1.8 V ≤ VCC < 2.4 V		300	—		
			1.6 V ≤ VCC < 1.8 V		1000	—		
		Clock synchronous	2.7 V ≤ VCC ≤ 3.6 V		100	—		
			2.4 V ≤ VCC < 2.7 V		200	—		
			1.8 V ≤ VCC < 2.4 V		400	—		
			1.6 V ≤ VCC < 1.8 V		1500	—		
	Input clock pulse width			t_{SCKW}	0.4	0.6	t_{Scyc}	
	Input clock rise time			t_{SCKr}	—	10	ns	
	Input clock fall time			t_{SCKf}	—	10	ns	
	Output clock cycle	Asynchronous	2.7 V ≤ VCC ≤ 3.6 V	t_{Scyc}	75 (exclude SCI1) 100 (SCI1)	—	ns	
			2.4 V ≤ VCC < 2.7 V		150 (exclude SCI1) 200 (SCI1)	—		
			1.8 V ≤ VCC < 2.4 V		300 (exclude SCI1) 400 (SCI1)	—		
			1.6 V ≤ VCC < 1.8 V		1500 (exclude SCI1) 2000 (SCI1)	—		
		Clock synchronous	1.8 V ≤ VCC ≤ 3.6 V		75	—		
			2.4 V ≤ VCC < 2.7 V		150	—		
			1.8 V ≤ VCC < 2.4 V		300	—		
			1.6 V ≤ VCC < 1.8 V		1000	—		
	Output clock pulse width			t_{SCKW}	0.4	0.6	t_{Scyc}	
	Output clock rise time		1.8 V ≤ VCC ≤ 3.6 V	t_{SCKr}	—	7.5	ns	
			1.6 V ≤ VCC < 1.8 V		—	30		
	Output clock fall time		1.8 V ≤ VCC ≤ 3.6 V	t_{SCKf}	—	7.5	ns	
			1.6 V ≤ VCC < 1.8 V		—	30		
	Transmit data delay time (master)	Clock synchronous	2.7 V ≤ VCC ≤ 3.6 V	t_{TXD}	—	25	ns	Figure 43.25
			2.4 V ≤ VCC < 2.7 V		—	30		
			1.8 V ≤ VCC < 2.4 V		—	65		
			1.6 V ≤ VCC < 1.8 V		—	110		
	Transmit data delay time (slave)	Clock synchronous	1.8 V ≤ VCC ≤ 3.6 V		—	35	ns	
			2.4 V ≤ VCC < 2.7 V		—	40		
			1.8 V ≤ VCC < 2.4 V		—	65		
			1.6 V ≤ VCC < 1.8 V		—	95		

Table 43.37 SCI timing (1) (2 of 2)

Conditions: VCC = AVCC0 = 1.6 to 3.6 V

Parameter				Symbol	Min	Max	Unit	Test conditions
SCI	Receive data setup time (master)	Clock synchronous	1.8 V ≤ VCC ≤ 3.6 V	t_{RXS}	35	—	ns	Figure 43.25
			2.4 V ≤ VCC < 2.7 V		40	—		
			1.8 V ≤ VCC < 2.4 V		65	—		
			1.6 V ≤ VCC < 1.8 V		90	—		
	Receive data setup time (slave)	Clock synchronous	2.4 V ≤ VCC ≤ 3.6 V		10	—	ns	
			1.8 V ≤ VCC ≤ 2.4 V		15	—		
			1.6 V ≤ VCC < 1.8 V		20	—		
	Receive data hold time (master)	Clock synchronous		t_{RXH}	5	—	ns	
	Receive data hold time (slave)	Clock synchronous		t_{RXH}	5	—	ns	

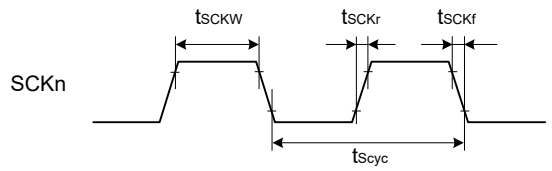

Note: n = 0, 1, 3 to 5, 9

Figure 43.24 SCK clock input timing

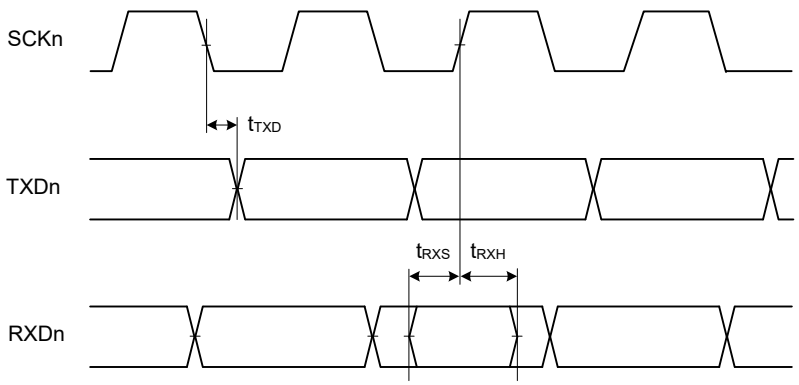

Note: n = 0, 1, 3 to 5, 9

Figure 43.25 SCI input/output timing in clock synchronous mode

Table 43.38 SCI timing (2) (1 of 2)

Conditions: VCC = AVCC0 = 1.6 to 3.6 V

Parameter				Symbol	Min	Max	Unit	Test conditions
Simple SPI	SCK clock cycle output (master)		1.8 V ≤ VCC ≤ 3.6 V	t_{SPcyc}	75	—	ns	Figure 43.26
			2.4 V ≤ VCC < 2.7 V		150	—		
			1.8 V ≤ VCC < 2.4 V		300	—		
			1.6 V ≤ VCC < 1.8 V		1000	—		
	SCK clock cycle input (slave)		1.8 V ≤ VCC ≤ 3.6 V		100	—		
			2.4 V ≤ VCC < 2.7 V		200	—		
			1.8 V ≤ VCC < 2.4 V		400	—		
			1.6 V ≤ VCC < 1.8 V		1500	—		
	SCK clock high pulse width			t_{SPCKWH}	0.4	0.6	t_{SPcyc}	
	SCK clock low pulse width			t_{SPCKWL}	0.4	0.6	t_{SPcyc}	
	SCK clock rise and fall time			t_{SPCKr}, t_{SPCKf}	—	10	ns	
	Data input setup time	Master	2.7 V ≤ VCC ≤ 3.6 V	t_{SU}	35	—	ns	Figure 43.27 to Figure 43.30
			2.4 V ≤ VCC < 2.7 V		40	—		
			1.8 V ≤ VCC < 2.4 V		65	—		
			1.6 V ≤ VCC < 1.8 V		90	—		
		Slave	1.8 V ≤ VCC ≤ 3.6 V		5	—		
			1.6 V ≤ VCC < 1.8 V		15	—		
	Data input hold time	Master		t_H	0	—	ns	
		Slave			18	—		
	SS input setup time			t_{LEAD}	1	—	t_{SPcyc}	
	SS input hold time			t_{LAG}	1	—	t_{SPcyc}	
	Data output delay time	Master	2.4 V ≤ VCC ≤ 3.6 V	t_{OD}	—	25	ns	
			2.4 V ≤ VCC ≤ 2.7 V		—	32		
			1.8 V ≤ VCC ≤ 2.4 V		—	65		
			1.6 V ≤ VCC < 1.8 V		—	110		
		Slave	2.7 V ≤ VCC ≤ 3.6 V		—	38		
			2.4 V ≤ VCC ≤ 2.7 V		—	42		
			1.8 V ≤ VCC < 2.4 V		—	70		
			1.6 V ≤ VCC < 1.8 V		—	95		
	Data output hold time	Master	2.7 V ≤ VCC ≤ 3.6 V	t_{OH}	-5	—	ns	
			2.4 V ≤ VCC < 2.7 V		-10	—		
			1.8 V ≤ VCC < 2.4 V		-10	—		
			1.6 V ≤ VCC < 1.8 V		-15	—		
		Slave			-5	—		
	Data rise and fall time	Master	1.8 V ≤ VCC ≤ 3.6 V	t_{Dr}, t_{Df}	—	5	ns	
		Slave	1.8 V ≤ VCC ≤ 3.6 V		—	5		

Table 43.38 SCI timing (2) (2 of 2)

Conditions: VCC = AVCC0 = 1.6 to 3.6 V

Parameter			Symbol	Min	Max	Unit	Test conditions
Simple SPI	Slave access time	2.7 V ≤ VCC ≤ 3.6 V	t_{SA}	—	8	t_{Pcyc}	Figure 43.27 to Figure 43.30
		2.4 V ≤ VCC < 2.7 V		—	9		
		1.8 V ≤ VCC < 2.4 V		—	13		
		1.6 V ≤ VCC < 1.8 V		—	6		
	Slave output release time	1.8 V ≤ VCC ≤ 3.6 V	t_{REL}	—	8	t_{Pcyc}	
		2.4 V ≤ VCC < 2.7 V		—	9		
		1.8 V ≤ VCC < 2.4 V		—	13		
		1.6 V ≤ VCC < 1.8 V		—	6		

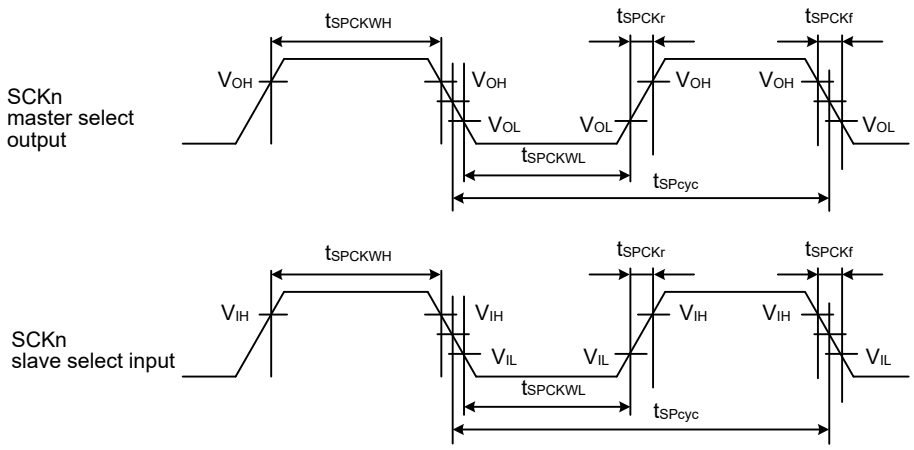

V_{OH} = 0.7 × VCC, V_{OL} = 0.3 × VCC, V_{IH} = 0.7 × VCC, V_{IL} = 0.3 × VCC

Note: n = 0, 1, 3 to 5, 9

Figure 43.26 SCI simple SPI mode clock timing

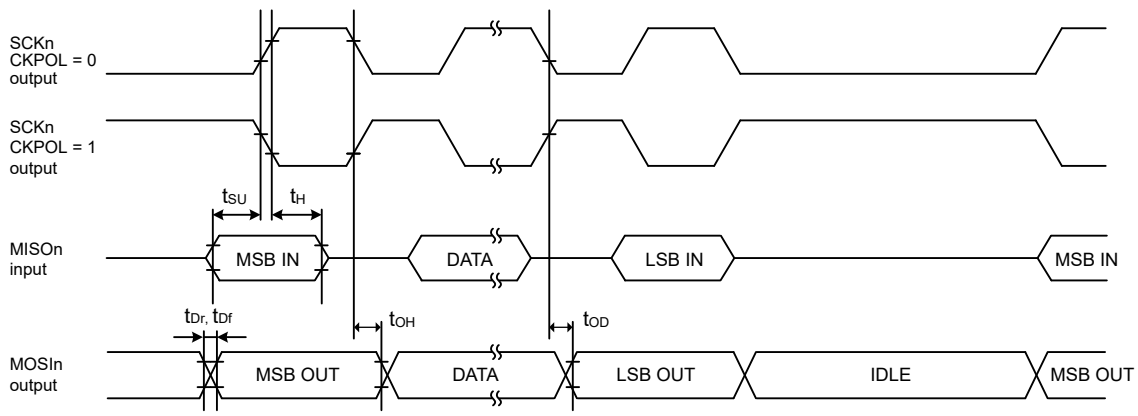

Note: n = 0, 1, 3 to 5, 9

Figure 43.27 SCI simple SPI mode timing (master, CKPH = 1)

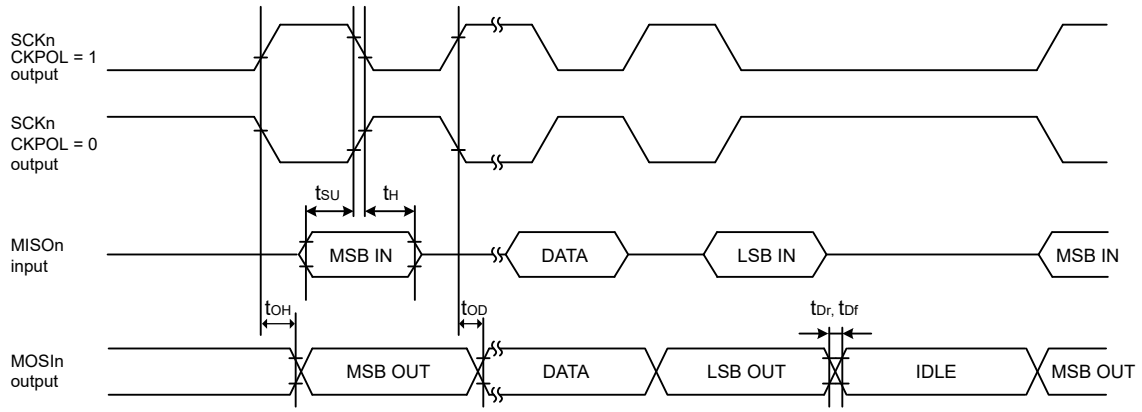

Note: n = 0, 1, 3 to 5, 9

Figure 43.28 SCI simple SPI mode timing (master, CKPH = 0)

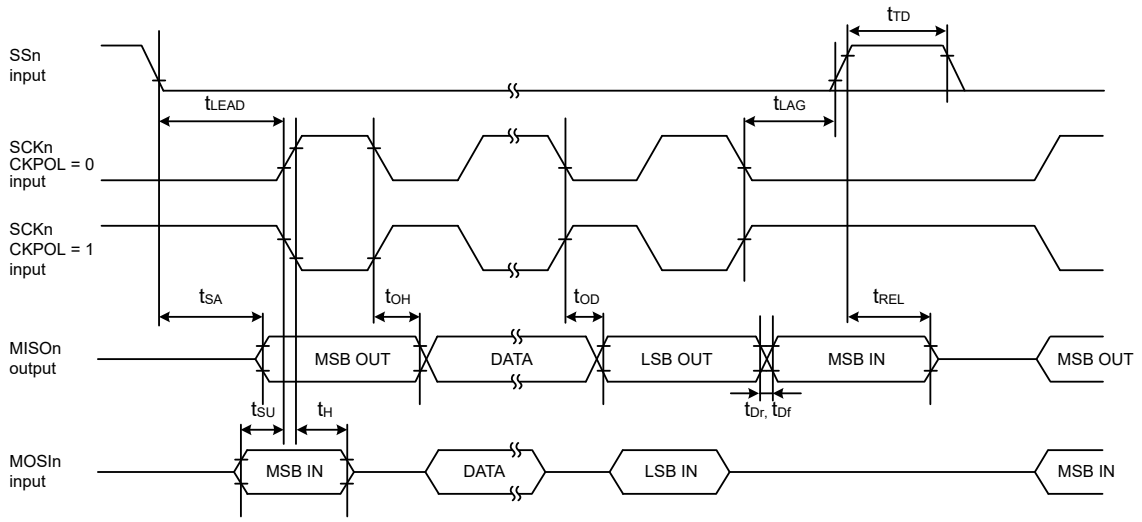

Note: n = 0, 1, 3 to 5, 9

Figure 43.29 SCI simple SPI mode timing (slave, CKPH = 1)

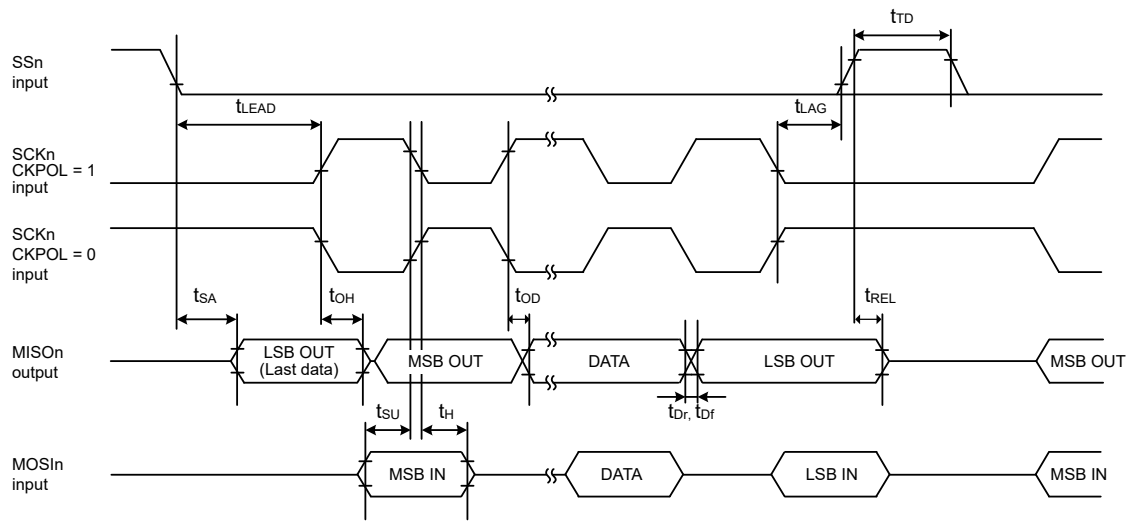

Note: n = 0, 1, 3 to 5, 9

Figure 43.30 SCI simple SPI mode timing (slave, CKPH = 0)

Table 43.39 SCI timing (3)

Conditions: VCC = AVCC0 = 1.6 to 3.6 V

Parameter		Symbol	Min	Max	Unit	Test conditions
Simple IIC (Standard mode)	SDA input rise time	t_{Sr}	—	1000	ns	Figure 43.31
	SDA input fall time	t_{Sf}	—	300	ns	
	SDA input spike pulse removal time	t_{SP}	0	$4 \times t_{IICcyc}$ *1	ns	
	Data input setup time	t_{SDAS}	250	—	ns	
	Data input hold time	t_{SDAH}	0	—	ns	
	SCL, SDA capacitive load	C_b *2	—	400	pF	
Simple IIC (Fast mode)	SDA input rise time	t_{Sr}	—	300	ns	Figure 43.31
	SDA input fall time	t_{Sf}	—	300	ns	
	SDA input spike pulse removal time	t_{SP}	0	$4 \times t_{IICcyc}$ *1	ns	
	Data input setup time	t_{SDAS}	100	—	ns	
	Data input hold time	t_{SDAH}	0	—	ns	
	SCL, SDA capacitive load	C_b *2	—	400	pF	

Note 1. t_{IICcyc}: Clock cycle selected by the SMR.CKS[1:0] bits.
Note 2. C_b indicates the total capacity of the bus line.

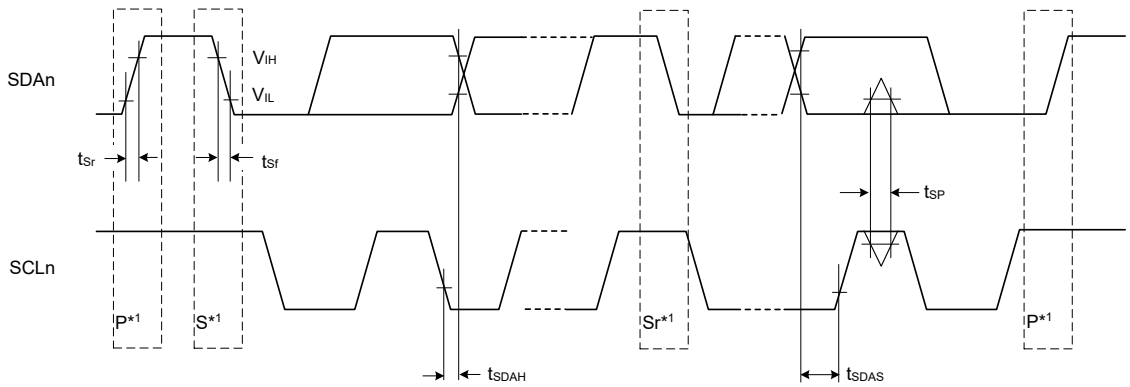

Test conditions:
V_{IH} = VCC × 0.7, V_{IL} = VCC × 0.3
V_{OL} = 0.6 V, I_{OL} = 6 mA

Note: n = 0, 1, 3 to 5, 9
Note 1. S, P, and Sr indicate the following conditions:
S: Start condition
P: Stop condition
Sr: Restart condition

Figure 43.31 SCI simple IIC mode timing

43.3.9 SPI Timing

Table 43.40 SPI timing (1 of 3)

Parameter			Symbol	Min	Max	Unit	Test conditions
RSPCK clock cycle	Master	2.7 V ≤ VCC ≤ 3.6 V	t_{SPcyc} *1	50	—	ns	Figure 43.32 C = 30 pF
		2.4 V ≤ VCC < 2.7 V		100	—		
		1.8 V ≤ VCC < 2.4 V		200	—		
		1.6 V ≤ VCC < 1.8 V		500	—		
	Slave	2.7 V ≤ VCC ≤ 3.6 V		100	—		
		2.4 V ≤ VCC < 2.7 V		200	—		
		1.8 V ≤ VCC < 2.4 V		400	—		
		1.6 V ≤ VCC < 1.8 V		1500	—		
RSPCK clock high pulse width	Master		t_{SPCKWH}	$(t_{SPcyc} - t_{SPCKr} - t_{SPCKf}) / 2 - 3$	—	ns	
	Slave			0.4 × t_{SPcyc}	0.6 × t_{SPcyc}		
RSPCK clock low pulse width	Master		t_{SPCKWL}	$(t_{SPcyc} - t_{SPCKr} - t_{SPCKf}) / 2 - 3$	—	ns	
	Slave			0.4 × t_{SPcyc}	0.6 × t_{SPcyc}		
RSPCK clock rise and fall time	Output	2.7 V ≤ VCC ≤ 3.6 V	t_{SPCKr}, t_{SPCKf}	—	10	ns	
		2.4 V ≤ VCC < 2.7 V		—	15		
		1.8 V ≤ VCC ≤ 2.4 V		—	20		
		1.6 V ≤ VCC < 1.8 V		—	30		
	Input			—	1	μs	

Table 43.40 SPI timing (2 of 3)

Parameter			Symbol	Min	Max	Unit	Test conditions
Data input setup time	Master	2.7 V ≤ VCC ≤ 3.6 V	t_{SU}	15	—	ns	Figure 43.33 to Figure 43.38 C = 30 pF
		2.4 V ≤ VCC < 2.7 V		25	—		
		1.8 V ≤ VCC < 2.4 V		38	—		
		1.6 V ≤ VCC < 1.8 V		0	—		
	Slave	2.4 V ≤ VCC ≤ 3.6 V		10	—		
		1.8 V ≤ VCC < 2.4 V		14	—		
		1.6 V ≤ VCC < 1.8 V		17	—		
Data input hold time	Master (RSPCK is PCLKA/2)		t_{HF}	0	—	ns	
	Master (RSPCK is not PCLKA/2)		t_{H}	t_{Pcyc}	—		
	Slave		t_{H}	10	—		
SSL setup time	Master	1.8 V ≤ VCC ≤ 3.6 V	t_{LEAD}	$-30 + N \times t_{Spcyc}$ *1	—	ns	
		1.6 V ≤ VCC < 1.8 V		$-34 + N \times t_{Spcyc}$ *1	—		
	Slave			$5 \times t_{Pcyc}$	—	ns	
SSL hold time	Master		t_{LAG}	$-30 + N \times t_{Spcyc}$ *2	—	ns	
	Slave			$5 \times t_{Pcyc}$	—	ns	
Data output delay time	Master	2.7 V ≤ VCC ≤ 3.6 V	t_{OD}	—	12	ns	
		2.4 V ≤ VCC < 2.7 V		—	12		
		1.8 V ≤ VCC < 2.4 V		—	12		
		1.6 V ≤ VCC < 1.8 V		—	12		
	Slave	2.7 V ≤ VCC ≤ 3.6 V		—	45		
		2.4 V ≤ VCC < 2.7 V		—	50		
		1.8 V ≤ VCC < 2.4 V		—	70		
		1.6 V ≤ VCC < 1.8 V		—	85		
Data output hold time	Master		t_{OH}	0	—	ns	
	Slave			0	—		
Successive transmission delay time	Master		t_{TD}	$t_{SPcyc} + 2 \times t_{Pcyc}$	$8 \times t_{SPcyc} + 2 \times t_{Pcyc}$	ns	
	Slave			$6 \times t_{Pcyc}$	—		
MOSI and MISO rise and fall time	Output	2.7 V ≤ VCC ≤ 3.6 V	t_{Dr}, t_{Df}	—	5	ns	Figure 43.33 to Figure 43.38 C = 30 pF
		2.4 V ≤ VCC < 2.7 V		—	15		
		1.8 V ≤ VCC < 2.4 V		—	20		
		1.6 V ≤ VCC < 1.8 V		—	30		
	Input			—	1		
SSL rise and fall time	Output	2.7 V ≤ VCC ≤ 3.6 V	t_{SSLr}, t_{SSLf}	—	5	ns	
		2.4 V ≤ VCC < 2.7 V		—	15		
		1.8 V ≤ VCC < 2.4 V		—	20		
		1.6 V ≤ VCC < 1.8 V		—	30		
	Input			—	1		

Table 43.40 SPI timing (3 of 3)

Parameter		Symbol	Min	Max	Unit	Test conditions
Slave access time	2.7 V ≤ VCC ≤ 3.6 V	t_{SA}	—	2 × t_{Pcyc} + 11	ns	Figure 43.37 and Figure 43.38 C = 30 pF
	2.4 V ≤ VCC < 2.7 V		—	2 × t_{Pcyc} + 15		
	1.8 V ≤ VCC < 2.4 V		—	2 × t_{Pcyc} + 35		
	1.6 V ≤ VCC < 1.8 V		—	2 × t_{Pcyc} + 55		
Slave output release time	2.7 V ≤ VCC ≤ 3.6 V	t_{REL}	—	2 × t_{Pcyc} + 11	ns	
	2.4 V ≤ VCC < 2.7 V		—	2 × t_{Pcyc} + 15		
	1.8 V ≤ VCC < 2.4 V		—	2 × t_{Pcyc} + 35		
	1.6 V ≤ VCC < 1.8 V		—	2 × t_{Pcyc} + 55		

Note: t_{Pcyc}: PCLKA cycle.
Note 1. N is set as an integer from 1 to 8 by the SPCKD register.
Note 2. N is set as an integer from 1 to 8 by the SSLND register.

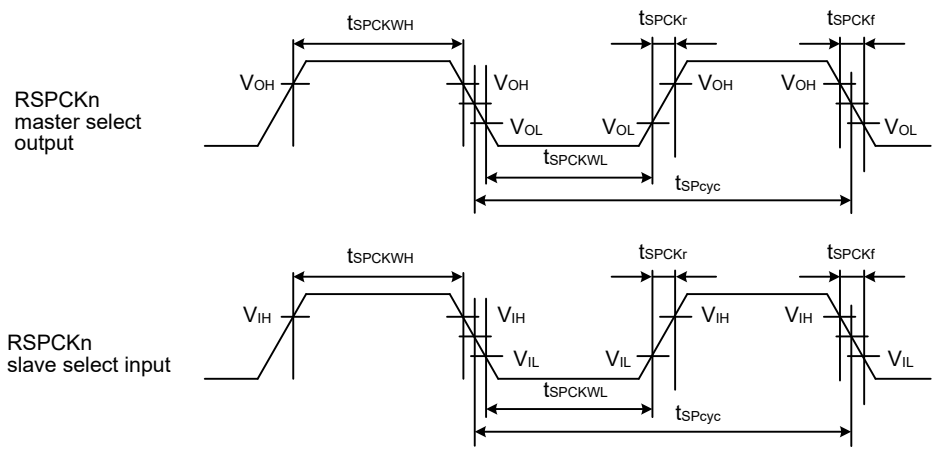

V_{OH} = 0.7 × VCC, V_{OL} = 0.3 × VCC, V_{IH} = 0.7 × VCC, V_{IL} = 0.3 × VCC

Note: n = A or B

Figure 43.32 SPI clock timing

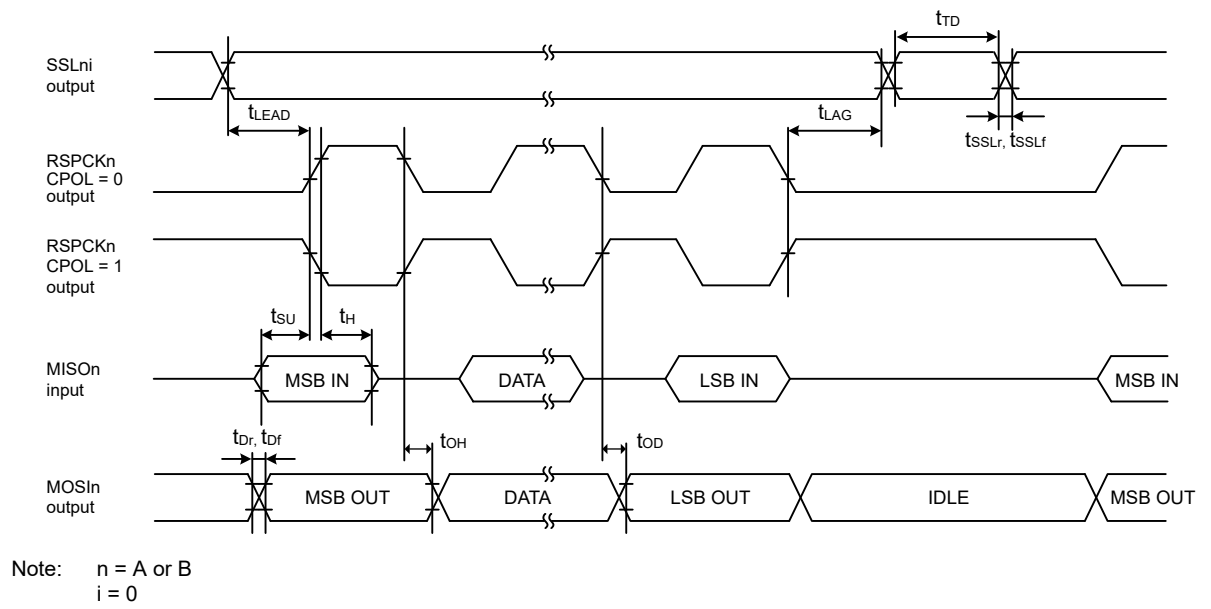

Note: n = A or B
i = 0

Figure 43.33 SPI timing (master, CPHA = 0) (bit rate: PCLKB division ratio is set to any value other than 1/2)

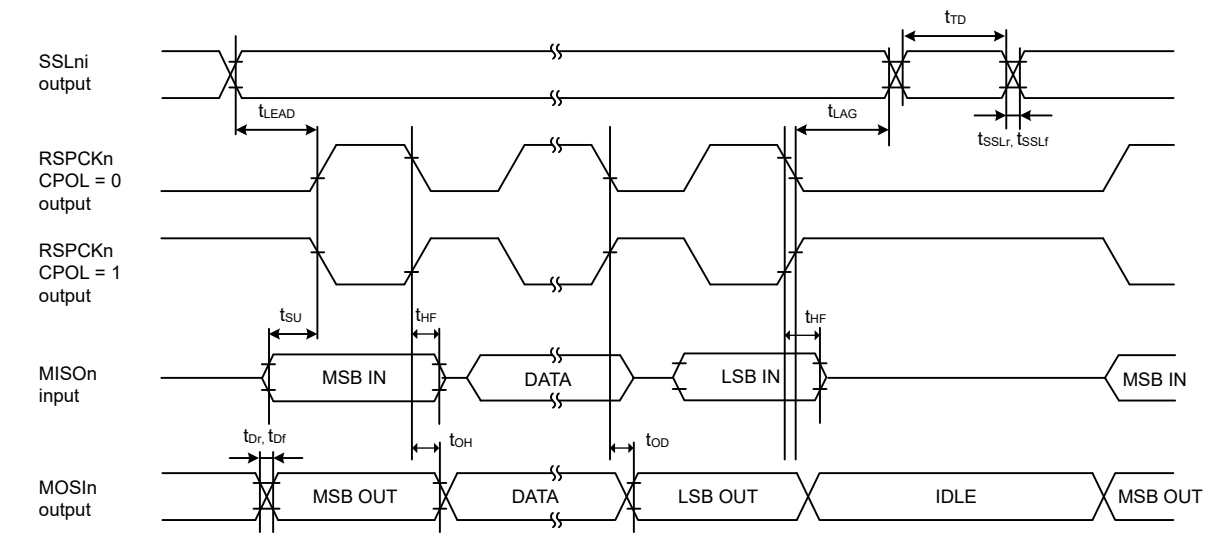

Note: n = A or B
i = 0

Figure 43.34 SPI timing (master, CPHA = 0) (bit rate: PCLKB division ratio is set to 1/2)

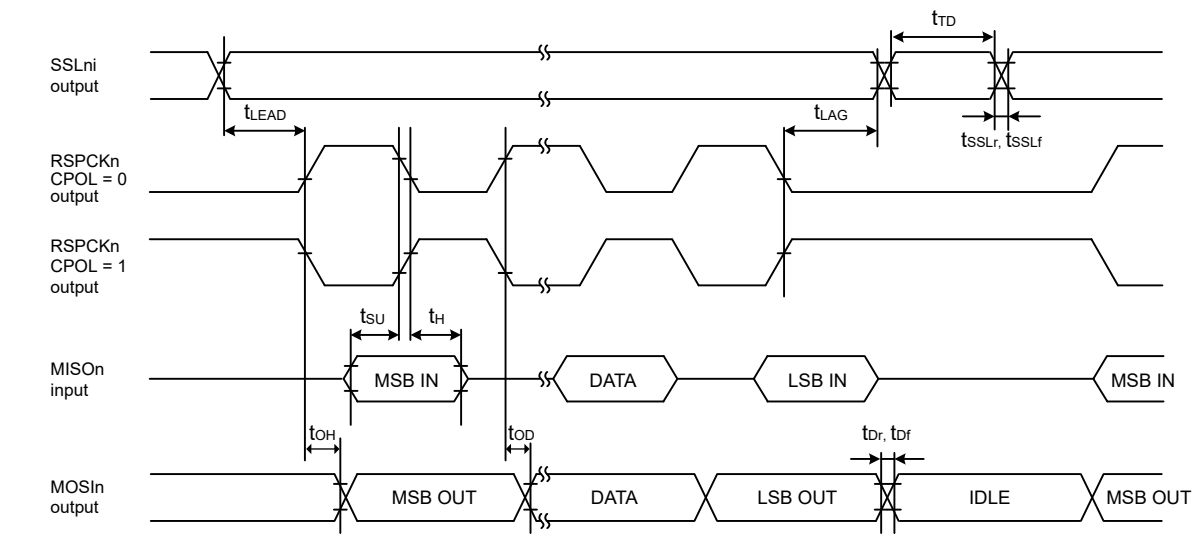

Note: n = A or B
i = 0

Figure 43.35 SPI timing (master, CPHA = 1) (bit rate: PCLKB division ratio is set to any value other than 1/2)

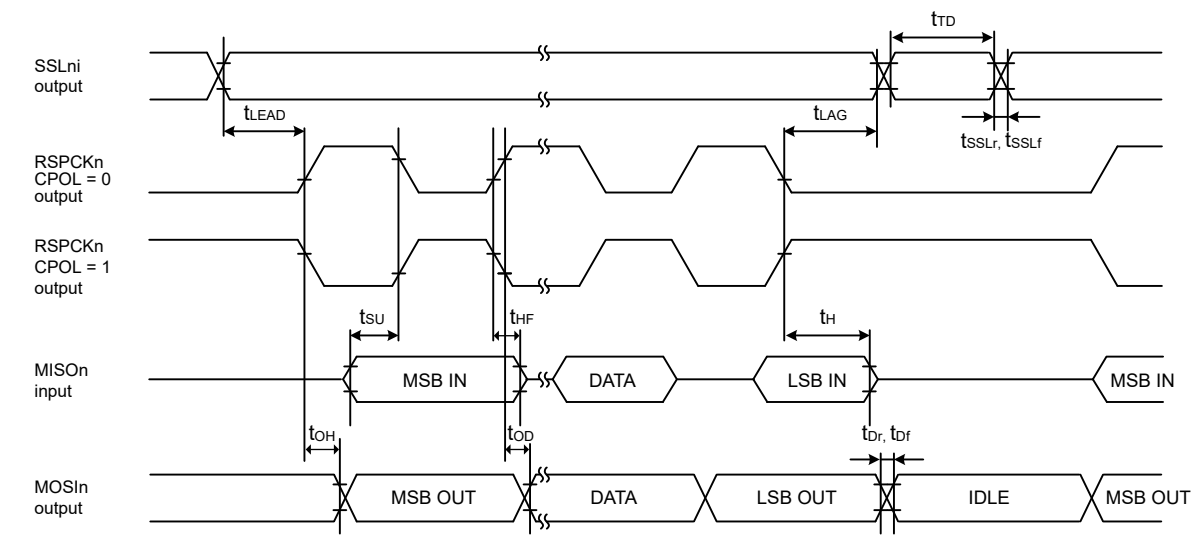

Note: n = A or B
i = 0

Figure 43.36 SPI timing (master, CPHA = 1) (bit rate: PCLKB division ratio is set to 1/2)

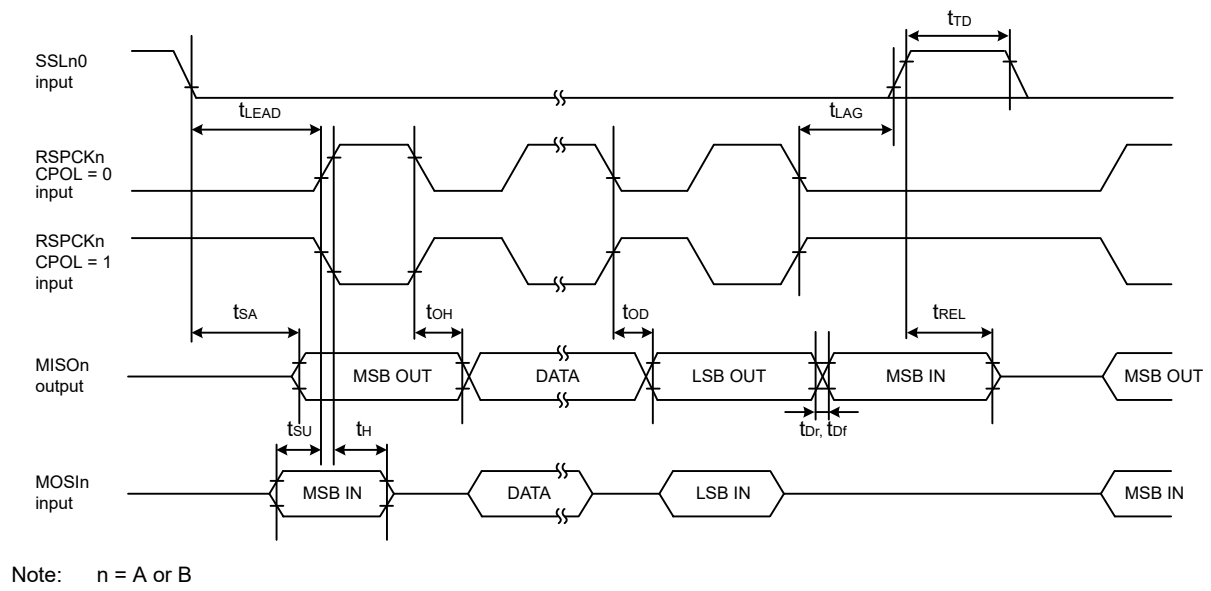

Note: n = A or B

Figure 43.37 SPI timing (slave, CPHA = 0)

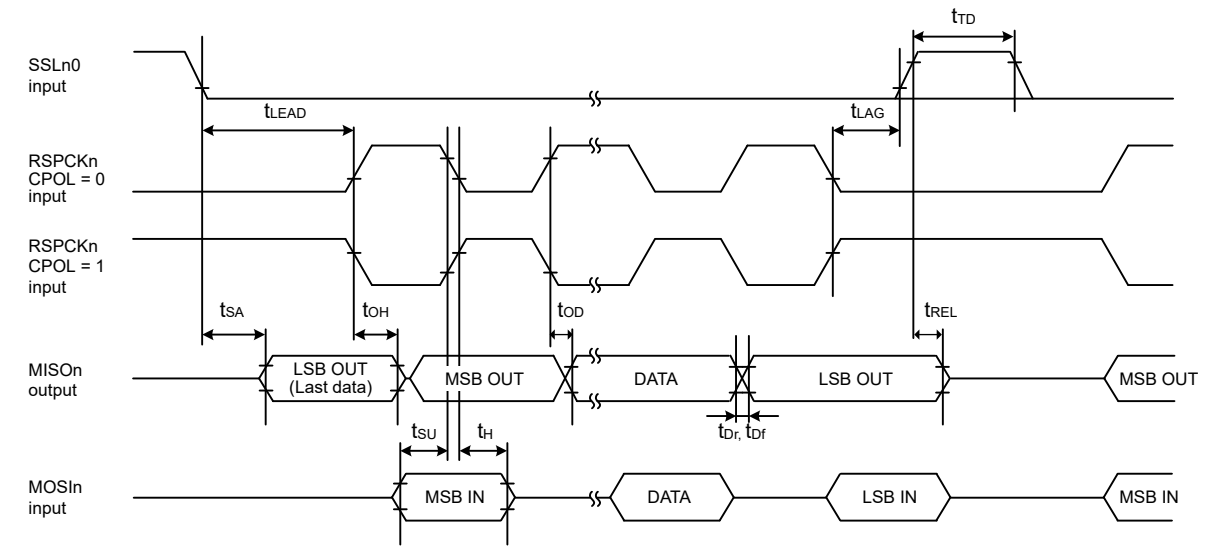

Note: n = A or B

Figure 43.38 SPI timing (slave, CPHA = 1)

43.3.10 QSPI Timing

Table 43.41 QSPI timing (1 of 2)

Parameter		Symbol	Min	Max	Unit	Test conditions
QSPCK clock cycle	2.4 V ≤ VCC ≤ 3.6 V	t_{QScyc}	50	—	ns	Figure 43.39
	1.8 V ≤ VCC < 2.4 V		100	—	ns	
	1.6 V ≤ VCC < 1.8 V		500	—	ns	
QSPCK clock high pulse width		t_{QSWH}	t_{QScyc} × 0.4	—	ns	
QSPCK clock low pulse width		t_{QSWL}	t_{QScyc} × 0.4	—	ns	

Table 43.41 QSPI timing (2 of 2)

Parameter		Symbol	Min	Max	Unit	Test conditions
Data input setup time	2.4 V ≤ VCC ≤ 3.6 V	t_{Su}	10	—	ns	Figure 43.40
	1.8 V ≤ VCC < 2.4 V		15	—	ns	
	1.6 V ≤ VCC < 1.8 V		15	—	ns	
Data input hold time	1.8 V ≤ VCC < 3.6 V	t_{IH}	0	—	ns	
	1.6 V ≤ VCC < 1.8 V		4	—	ns	
QSSL setup time	2.4 V ≤ VCC ≤ 3.6 V	t_{Su}	(N + 0.5) × t_{Qscyc} − 9*1	(N + 0.5) × t_{Qscyc} + 100*1	ns	
	1.8 V ≤ VCC < 2.4 V		(N + 0.5) × t_{Qscyc} − 15*1	(N + 0.5) × t_{Qscyc} + 100*1	ns	
	1.6 V ≤ VCC < 1.8 V		(N + 0.5) × t_{Qscyc} − 24*1	(N + 0.5) × t_{Qscyc} + 100*1	ns	
QSSL hold time	1.8 V ≤ VCC ≤ 3.6 V	t_{LAG}	(N + 0.5) × t_{Qscyc} − 5*2	(N + 0.5) × t_{Qscyc} + 100*2	ns	
	1.6 V ≤ VCC < 1.8 V		(N + 0.5) × t_{Qscyc} − 8*2	(N + 0.5) × t_{Qscyc} + 100*2	ns	
Data output delay	2.4 V ≤ VCC ≤ 3.6 V	t_{OD}	—	9	ns	
	1.8 V ≤ VCC < 2.4 V		—	16	ns	
	1.6 V ≤ VCC < 1.8 V		—	24	ns	
Data output hold time	1.8 V ≤ VCC ≤ 3.6 V	t_{OH}	−3.3	—	ns	
	1.6 V ≤ VCC < 1.8 V		−6.3	—	ns	
Successive transmission delay		t_{TD}	1	16	t_{QScyc}	

Note: t_{Pcyc}: PCLKA cycle.
Note 1. N is set to 0 or 1 in SFMSLD.
Note 2. N is set to 0 or 1 in SFMSHD.

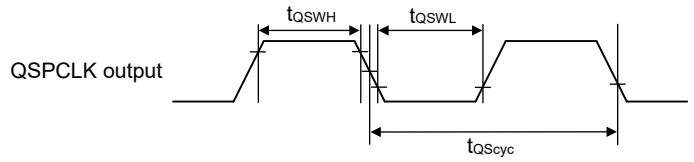

Figure 43.39 QSPI clock timing

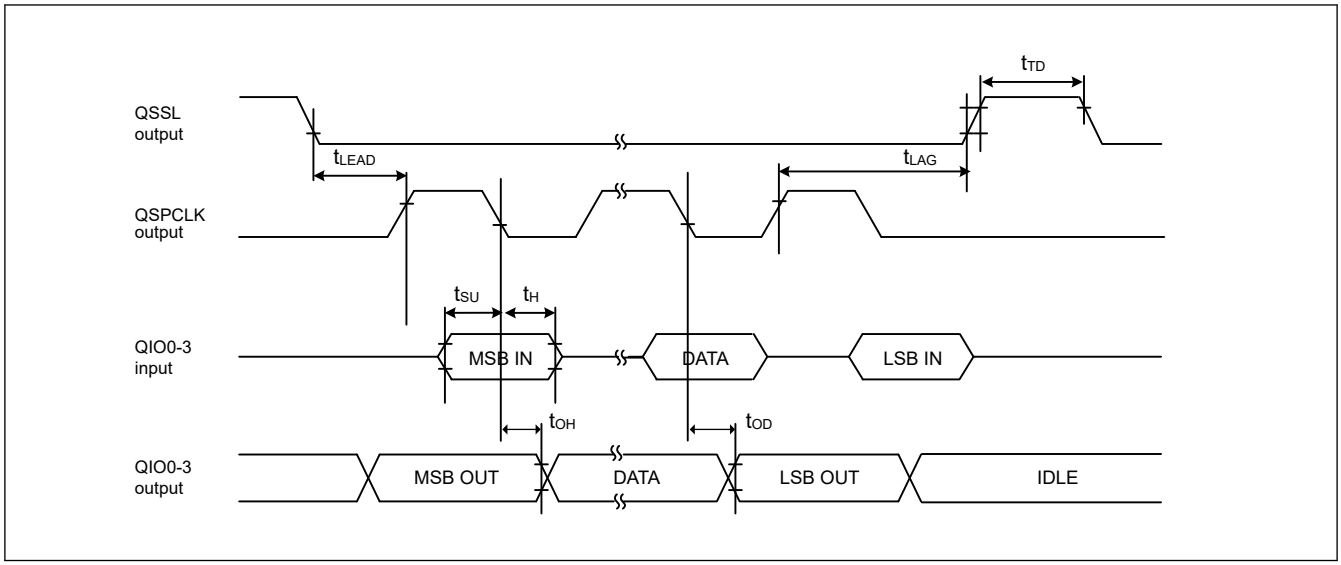

Figure 43.40 Transmit and receive timing

43.3.11 IIC Timing

Table 43.42 IIC timing (1) (1 of 2)

Conditions: VCC = AVCC0 = 1.8 to 3.6 V

Parameter		Symbol	Min*1	Max*1	Unit	Test conditions
IIC (standard mode, SMBus) ICFER.FMPE = 0	SCL input cycle time	t_{SCL}	6 (12) × t_{IICcyc} + 1300	—	ns	Figure 43.41
	SCL input high pulse width	t_{SCLH}	3 (6) × t_{IICcyc} + 300	—	ns	
	SCL input low pulse width	t_{SCLL}	3 (6) × t_{IICcyc} + 300	—	ns	
	SCL, SDA rise time	t_{Sr}	—	1000	ns	
	SCL, SDA fall time	t_{Sf}	—	300	ns	
	SCL, SDA input spike pulse removal time	t_{SP}	0	1 (4) × t_{IICcyc}	ns	
	SDA input bus free time when wakeup function is disabled	t_{BUF}	3 (6) × t_{IICcyc} + 300	—	ns	
	SDA input bus free time when wakeup function is enabled	t_{BUF}	3 (6) × t_{IICcyc} + 4 × t_{Pcyc} + 300	—	ns	
	START condition input hold time when wakeup function is disabled	t_{STAH}	t_{IICcyc} + 300	—	ns	
	START condition input hold time when wakeup function is enabled	t_{STAH}	1 (5) × t_{IICcyc} + t_{Pcyc} + 300	—	ns	
	Repeated START condition input setup time	t_{STAS}	1000	—	ns	
	STOP condition input setup time	t_{STOS}	1000	—	ns	
	Data input setup time	t_{SDAS}	t_{IICcyc} + 50	—	ns	
	Data input hold time	t_{SDAH}	0	—	ns	
	SCL, SDA capacitive load	C_b*2	—	400	pF	

Table 43.42 IIC timing (1) (2 of 2)

Conditions: VCC = AVCC0 = 1.8 to 3.6 V

Parameter		Symbol	Min*1	Max*1	Unit	Test conditions
IIC (Fast mode) ICFER.FMPE = 0	SCL input cycle time	t_{SCL}	6 (12) × t_{IICcyc} + 600	—	ns	Figure 43.41
	SCL input high pulse width	t_{SCLH}	3 (6) × t_{IICcyc} + 300	—	ns	
	SCL input low pulse width	t_{SCLL}	3 (6) × t_{IICcyc} + 300	—	ns	
	SCL, SDA rise time	t_{Sr}	—	300	ns	
	SCL, SDA fall time	t_{Sf}	—	300	ns	
	SCL, SDA input spike pulse removal time	t_{SP}	0	1 (4) × t_{IICcyc}	ns	
	SDA input bus free time (When wakeup function is disabled)	t_{BUF}	3 (6) × t_{IICcyc} + 300	—	ns	
	SDA input bus free time (When wakeup function is enabled)	t_{BUF}	3 (6) × t_{IICcyc} + 4 × t_{Pcyc}+ 300	—	ns	
	START condition input hold time (When wakeup function is disabled)	t_{STAH}	t_{IICcyc} + 300	—	ns	
	START condition input hold time (When wakeup function is enabled)	t_{STAH}	1 (5) × t_{IICcyc} + t_{Pcyc} + 300	—	ns	
	Repeated START condition input setup time	t_{STAS}	300	—	ns	
	STOP condition input setup time	t_{STOS}	300	—	ns	
	Data input setup time	t_{SDAS}	t_{IICcyc} + 50	—	ns	
	Data input hold time	t_{SDAH}	0	—	ns	
	SCL, SDA capacitive load	C_b*2	—	400	pF	

Note: Use pins that have a letter appended to their names, for instance "_A" or "_B", to indicate group membership.The AC portion of the electrical characteristics is measured for each group.

Note: t_{IICcyc}: IIC internal reference clock (IICφ) cycle, t_{Pcyc}: PCLKB cycle

Note 1. Values in parentheses apply when ICMR3.NF[1:0] is set to 11b while the digital filter is enabled with ICFER.NFE set to 1.

Note 2. C_b indicates the total capacity of the bus line.

Table 43.43 IIC timing (2)

Conditions: VCC = AVCC0 = 2.7 to 3.6 V

Parameter		Symbol	Min*1	Max*1	Unit	Test conditions
IIC (Fast-mode+) ICFER.FMPE = 1	SCL input cycle time	t_{SCL}	6 (12) × t_{IICcyc} + 240	—	ns	Figure 43.41
	SCL input high pulse width	t_{SCLH}	3 (6) × t_{IICcyc} + 120	—	ns	
	SCL input low pulse width	t_{SCLL}	3 (6) × t_{IICcyc} + 120	—	ns	
	SCL, SDA rise time	t_{Sr}	—	120	ns	
	SCL, SDA fall time	t_{Sf}	—	120	ns	
	SCL, SDA input spike pulse removal time	t_{SP}	0	1 (4) × t_{IICcyc}	ns	
	SDA input bus free time when wakeup function is disabled	t_{BUF}	3 (6) × t_{IICcyc} + 120	—	ns	
	SDA input bus free time when wakeup function is enabled	t_{BUF}	3 (6) × t_{IICcyc} + 4 × t_{Pcyc} + 120	—	ns	
	Start condition input hold time when wakeup function is disabled	t_{STAH}	t_{IICcyc} + 120	—	ns	
	START condition input hold time when wakeup function is enabled	t_{STAH}	1 (5) × t_{IICcyc} + t_{Pcyc} + 120	—	ns	
	Restart condition input setup time	t_{STAS}	120	—	ns	
	Stop condition input setup time	t_{STOS}	120	—	ns	
	Data input setup time	t_{SDAS}	t_{IICcyc} + 30	—	ns	
	Data input hold time	t_{SDAH}	0	—	ns	
	SCL, SDA capacitive load	C_b*2	—	550	pF	

Note: t_{IICcyc}: IIC internal reference clock (IICφ) cycle, t_{Pcyc}: PCLKB cycle.
Note: The Fast-mode Plus enable bit (FMPE) is supported by IIC0 (SCL0_A, SDA0_A) and IIC1 (SCL1_A, SDA1_A).
Note 1. Values in parentheses apply when ICMR3.NF[1:0] is set to 11b while the digital filter is enabled with ICFER.NFE set to 1.
Note 2. C_b indicates the total capacity of the bus line.

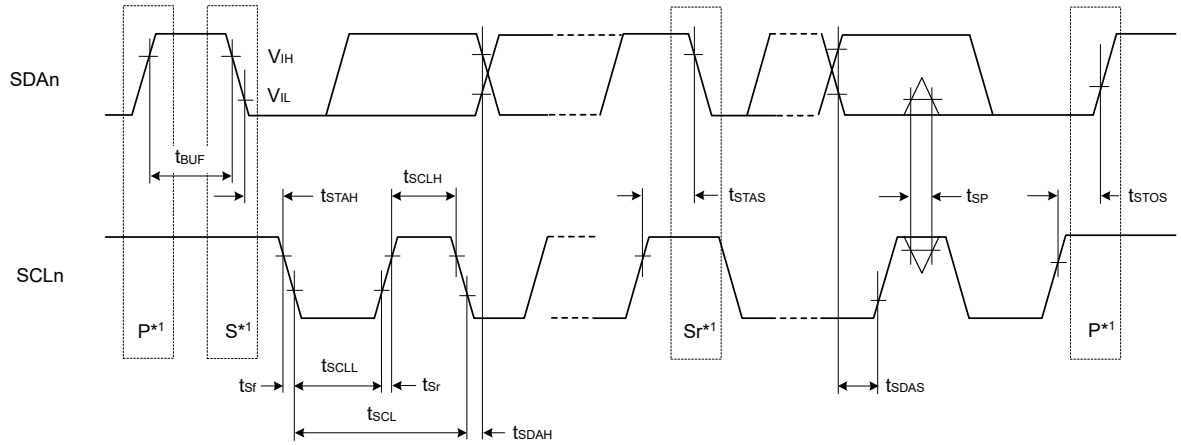

Note: n = 0, 1
Note 1. S, P, and Sr indicate the following conditions:
S: Start condition
P: Stop condition
Sr: Restart condition

Figure 43.41 I²C bus interface input/output timing

43.3.12 UARTA Timing

Table 43.44 UARTA interface timing

Parameter	Symbol	Min.	Max.	Unit	Test conditions
Transfer rate	—	200	153600	bps	—

43.3.13 CANFD Timing

Table 43.45 CANFD interface timing

Parameter	Symbol	CAN		CANFD		Unit	Test conditions
		Min	Max	Min	Max		
Internal delay time	t_{node}	—	100	—	75	ns	Figure 43.42

Note: $t_{node} = t_{d(CTX)} + t_{d(CRX)}$

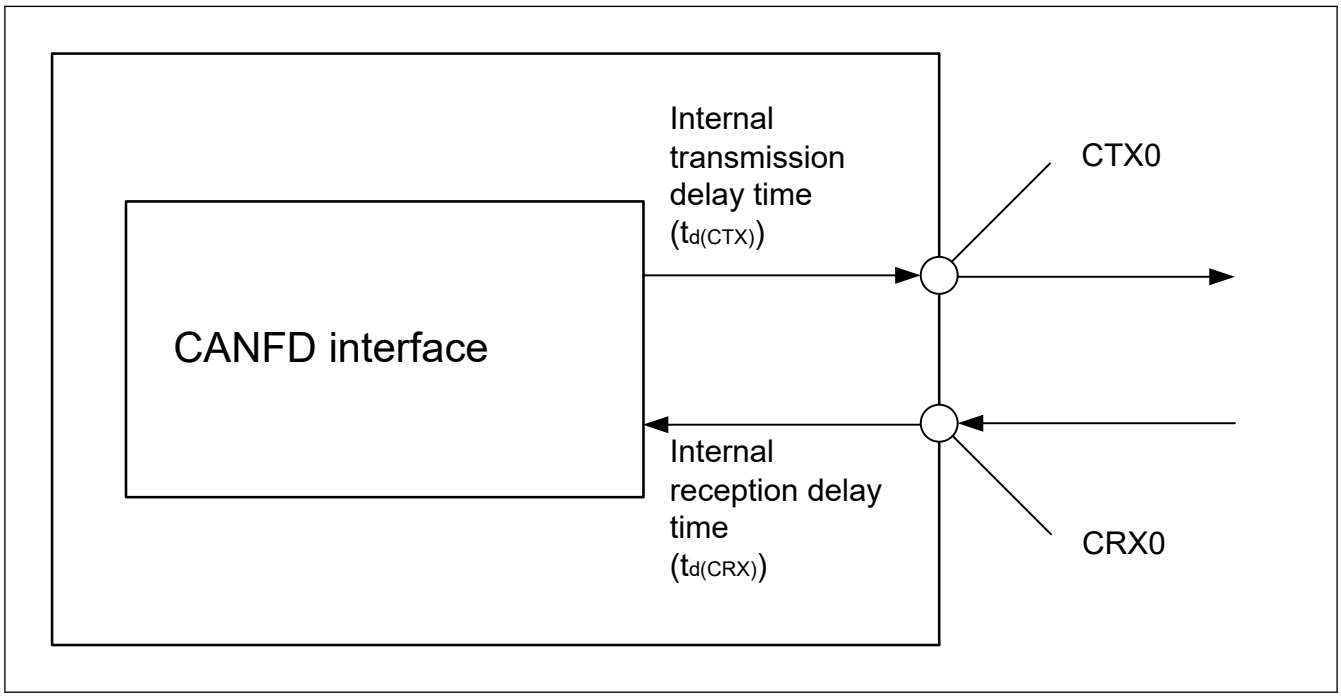

Figure 43.42 CANFD interface condition

43.4 ADC12 Characteristics

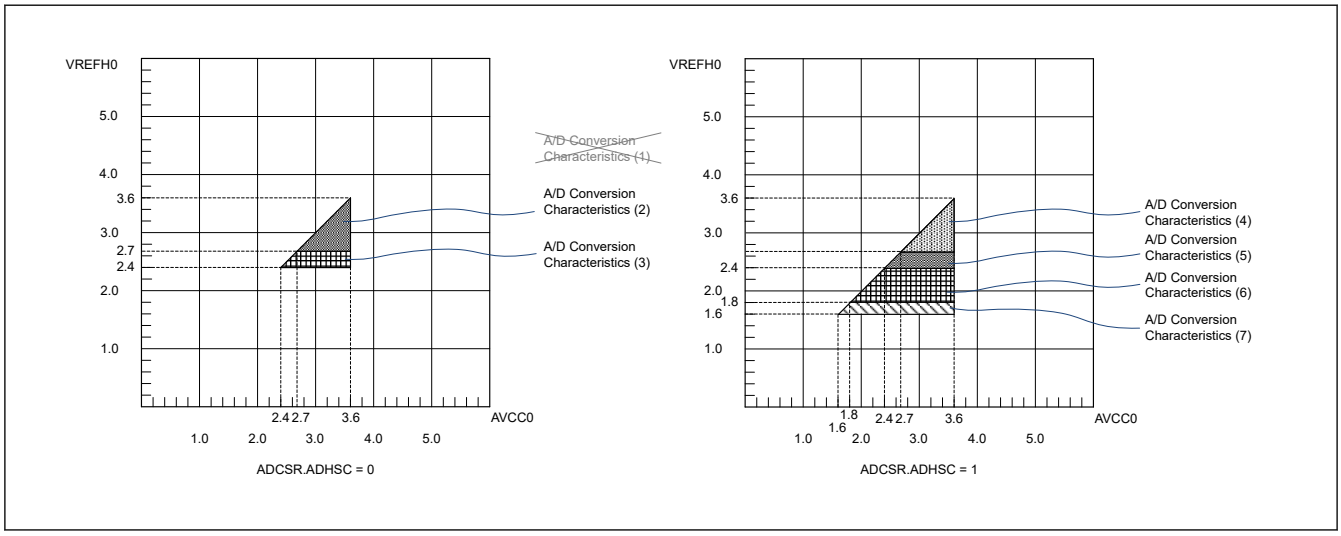

Figure 43.43 AVCC0 to VREFH0 voltage range

Table 43.46 A/D conversion characteristics (1) in high-speed A/D conversion mode

Conditions: VCC = AVCC0 = VREFH0 = 2.7 to 3.6 V*5, VSS = AVSS0 = VREFL0 = 0 V
Reference voltage range applied to the VREFH0 and VREFL0.

Parameter		Min	Typ	Max	Unit	Test conditions
PCLKC (ADCLK) frequency		1	—	48	MHz	—
Analog input capacitance*2	Cs	—	—	9*3	pF	High-precision channel
		—	—	10*3	pF	Normal-precision channel
Analog input resistance	Rs	—	—	1.9*3	kΩ	High-precision channel
		—	—	6.0*3	kΩ	Normal-precision channel
Analog input voltage range	Ain	0	—	VREFH0	V	—
Resolution		—	—	12	Bit	—
Conversion time*1 (Operation at PCLKC = 48 MHz)	Permissible signal source impedance Max. = 0.3 kΩ	0.67 (0.219)*4	—	—	μs	High-precision channel ADCSR.ADHSC = 0 ADSSTRn.SST[7:0] = 0x0A ADACSR.ADSAC = 1
		1.29 (0.844)*4	—	—	μs	Normal-precision channel ADCSR.ADHSC = 0 ADSSTRn.SST[7:0] = 0x28 ADACSR.ADSAC = 1
Offset error		—	±1.0	±5.5	LSB	High-precision channel
				±7.0	LSB	Other than specified
Full-scale error		—	±1.0	±5.5	LSB	High-precision channel
				±7.0	LSB	Other than specified
Quantization error		—	±0.5	—	LSB	—
Absolute accuracy		—	±2.5	±6.0	LSB	High-precision channel
				±9.0	LSB	Other than specified
DNL differential nonlinearity error		—	±1.0	—	LSB	—
INL integral nonlinearity error		—	±1.5	±3.0	LSB	—

Note: The characteristics apply when no pin functions other than 12-bit A/D converter input are used. Absolute accuracy does not include quantization errors. Offset error, full-scale error, DNL differential nonlinearity error, and INL integral nonlinearity error do not include quantization errors.

Note 1. The conversion time is the sum of the sampling time and the comparison time. The number of sampling states is indicated for the test conditions.

Note 2. Except for I/O input capacitance (Cin), see section 43.2.4. I/O V_{OH}, V_{OL}, and Other Characteristics.
Note 3. Reference data.
Note 4. ( ) lists sampling time.
Note 5. When VREFH0 < AVCC0, the MAX. values are as follows.
Absolute accuracy/Offset error/Full-scale error:
For voltage difference between AVCC0 and VREFH0, it should be added ±0.75 LSB/V to the Max spec.
INL integral non-linearity error:
For voltage difference between AVCC0 and VREFH0, it should be added ±0.2 LSB/V to the Max spec.

Table 43.47 A/D conversion characteristics (2) in high-speed A/D conversion mode

Conditions: VCC = AVCC0 = VREFH0 = 2.4 to 3.6 V*5, VSS = AVSS0 = VREFL0 = 0 V
Reference voltage range applied to the VREFH0 and VREFL0.

Parameter		Min		Max	Unit	Test conditions
PCLKC (ADCLK) frequency		1	—	32	MHz	—
Analog input capacitance*2	Cs	—	—	9*3	pF	High-precision channel
		—	—	10*3	pF	Normal-precision channel
Analog input resistance	Rs	—	—	2.2*3	kΩ	High-precision channel
		—	—	7.0*3	kΩ	Normal-precision channel
Analog input voltage range	Ain	0	—	VREFH0	V	—
Resolution		—	—	12	Bit	—
Conversion time*1 (Operation at PCLKC = 32 MHz)	Permissible signal source impedance Max. = 1.3 kΩ	1.00 (0.328)*4	—	—	μs	High-precision channel ADCSR.ADHSC = 0 ADSSTRn.SST[7:0] = 0x0A ADACSR.ADSAC = 1
		1.94 (1.266)*4	—	—	μs	Normal-precision channel ADCSR.ADHSC = 0 ADSSTRn.SST[7:0] = 0x28 ADACSR.ADSAC = 1
Offset error		—	±1.0	±5.5	LSB	High-precision channel
				±7.0	LSB	Other than specified
Full-scale error		—	±1.0	±5.5	LSB	High-precision channel
				±7.0	LSB	Other than specified
Quantization error		—	±0.5	—	LSB	—
Absolute accuracy		—	±2.50	±6.0	LSB	High-precision channel
				±9.0	LSB	Other than specified
DNL differential nonlinearity error		—	±1.0	—	LSB	—
INL integral nonlinearity error		—	±1.5	±3.0	LSB	—

Note: The characteristics apply when no pin functions other than 12-bit A/D converter input are used. Absolute accuracy does not include quantization errors. Offset error, full-scale error, DNL differential nonlinearity error, and INL integral nonlinearity error do not include quantization errors.
Note 1. The conversion time is the sum of the sampling time and the comparison time. The number of sampling states is indicated for the test conditions.
Note 2. Except for I/O input capacitance (Cin), see section 43.2.4. I/O V_{OH}, V_{OL}, and Other Characteristics.
Note 3. Reference data.
Note 4. ( ) lists sampling time.
Note 5. When VREFH0 < AVCC0, the MAX. values are as follows.
Absolute accuracy/Offset error/Full-scale error:
For voltage difference between AVCC0 and VREFH0, it should be added ±0.75 LSB/V to the Max spec.
INL integral non-linearity error:
For voltage difference between AVCC0 and VREFH0, it should be added ±0.2 LSB/V to the Max spec.

Table 43.48 A/D conversion characteristics (3) in low-power A/D conversion mode (1 of 2)

Conditions: VCC = AVCC0 = VREFH0 = 2.7 to 3.6 V*5, VSS = AVSS0 = VREFL0 = 0 V
Reference voltage range applied to the VREFH0 and VREFL0.

Parameter	Min	Typ	Max	Unit	Test conditions
PCLKC (ADCLK) frequency	1	—	24	MHz	—

Table 43.48 A/D conversion characteristics (3) in low-power A/D conversion mode (2 of 2)

Conditions: VCC = AVCC0 = VREFH0 = 2.7 to 3.6 V*5, VSS = AVSS0 = VREFL0 = 0 V
Reference voltage range applied to the VREFH0 and VREFL0.

Parameter		Min	Typ	Max	Unit	Test conditions
Analog input capacitance*2	Cs	—	—	9*3	pF	High-precision channel
		—	—	10*3	pF	Normal-precision channel
Analog input resistance	Rs	—	—	1.9*3	kΩ	High-precision channel
		—	—	6*3	kΩ	Normal-precision channel
Analog input voltage range	Ain	0	—	VREFH0	V	—
Resolution		—	—	12	Bit	—
Conversion time*1 (Operation at PCLKC = 24 MHz)	Permissible signal source impedance Max. = 1.1 kΩ	1.58 (0.438)*4	—	—	μs	High-precision channel ADCSR.ADHSC = 1 ADSSTRn.SST[7:0] = 0x0A ADACSR.ADSAC = 1
		2.0 (0.854)*4	—	—	μs	Normal-precision channel ADCSR.ADHSC = 1 ADSSTRn.SST[7:0] = 0x14 ADACSR.ADSAC = 1
Offset error		—	±1.25	±6.0	LSB	High-precision channel
				±7.5	LSB	Other than specified
Full-scale error		—	±1.25	±6.0	LSB	High-precision channel
				±7.5	LSB	Other than specified
Quantization error		—	±0.5	—	LSB	—
Absolute accuracy		—	±3.25	±7.0	LSB	High-precision channel
				±10.0	LSB	Other than specified
DNL differential nonlinearity error		—	±1.5	—	LSB	—
INL integral nonlinearity error		—	±1.75	±4.0	LSB	—

Note: The characteristics apply when no pin functions other than 12-bit A/D converter input are used. Absolute accuracy does not include quantization errors. Offset error, full-scale error, DNL differential nonlinearity error, and INL integral nonlinearity error do not include quantization errors.

Note 1. The conversion time is the sum of the sampling time and the comparison time. The number of sampling states is indicated for the test conditions.

Note 2. Except for I/O input capacitance (Cin), see section 43.2.4. I/O V_{OH}, V_{OL}, and Other Characteristics.

Note 3. Reference data.

Note 4. ( ) lists sampling time.

Note 5. When VREFH0 < AVCC0, the MAX. values are as follows.
Absolute accuracy/Offset error/Full-scale error:
For voltage difference between AVCC0 and VREFH0, it should be added ±0.75 LSB/V to the Max spec.
INL integral non-linearity error:
For voltage difference between AVCC0 and VREFH0, it should be added ±0.2 LSB/V to the Max spec.

Table 43.49 A/D conversion characteristics (4) in low-power A/D conversion mode (1 of 2)

Conditions: VCC = AVCC0 = VREFH0 = 2.4 to 3.6 V*5, VSS = AVSS0 = VREFL0 = 0 V
Reference voltage range applied to the VREFH0 and VREFL0.

Parameter		Min	Typ	Max	Unit	Test conditions
PCLKC (ADCLK) frequency		1	—	16	MHz	—
Analog input capacitance*2	Cs	—	—	9*3	pF	High-precision channel
		—	—	10*3	pF	Normal-precision channel
Analog input resistance	Rs	—	—	2.2*3	kΩ	High-precision channel
		—	—	7*3	kΩ	Normal-precision channel
Analog input voltage range	Ain	0	—	VREFH0	V	—
Resolution		—	—	12	Bit	—

Table 43.49 A/D conversion characteristics (4) in low-power A/D conversion mode (2 of 2)

Conditions: VCC = AVCC0 = VREFH0 = 2.4 to 3.6 V*5, VSS = AVSS0 = VREFL0 = 0 V
Reference voltage range applied to the VREFH0 and VREFL0.

Parameter		Min	Typ	Max	Unit	Test conditions
Conversion time*1 (Operation at PCLKC = 16 MHz)	Permissible signal source impedance Max. = 2.2 kΩ	2.38 (0.656)*4	—	—	μs	High-precision channel ADCSR.ADHSC = 1 ADSSTRn.SST[7:0] = 0x0A ADACSR.ADSAC = 1
		3.0 (1.281)*4	—	—	μs	Normal-precision channel ADCSR.ADHSC = 1 ADSSTRn.SST[7:0] = 0x14 ADACSR.ADSAC = 1
Offset error		—	±1.25	±6.0	LSB	High-precision channel
				±7.5	LSB	Other than specified
Full-scale error		—	±1.25	±6.0	LSB	High-precision channel
				±7.5	LSB	Other than specified
Quantization error		—	±0.5	—	LSB	—
Absolute accuracy		—	±3.25	±7.0	LSB	High-precision channel
				±10.0	LSB	Other than specified
DNL differential nonlinearity error		—	±1.5	—	LSB	—
INL integral nonlinearity error		—	±1.75	±4.0	LSB	—

Note: The characteristics apply when no pin functions other than 12-bit A/D converter input are used. Absolute accuracy does not include quantization errors. Offset error, full-scale error, DNL differential nonlinearity error, and INL integral nonlinearity error do not include quantization errors.
Note 1. The conversion time is the sum of the sampling time and the comparison time. The number of sampling states is indicated for the test conditions.
Note 2. Except for I/O input capacitance (Cin), see section 43.2.4. I/O V_{OH}, V_{OL}, and Other Characteristics.
Note 3. Reference data.
Note 4. ( ) lists sampling time.
Note 5. When VREFH0 < AVCC0, the MAX. values are as follows.
Absolute accuracy/Offset error/Full-scale error:
For voltage difference between AVCC0 and VREFH0, it should be added ±0.75 LSB/V to the Max spec.
INL integral non-linearity error:
For voltage difference between AVCC0 and VREFH0, it should be added ±0.2 LSB/V to the Max spec.

Table 43.50 A/D conversion characteristics (5) in low-power A/D conversion mode (1 of 2)

Conditions: VCC = AVCC0 = VREFH0 = 1.8 to 3.6 V*5 (AVCC0 = VCC when VCC < 2.0 V), VSS = AVSS0 = VREFL0 = 0 V
Reference voltage range applied to the VREFH0 and VREFL0.

Parameter		Min	Typ	Max	Unit	Test conditions
PCLKC (ADCLK) frequency		1	—	8	MHz	—
Analog input capacitance*2	Cs	—	—	9*3	pF	High-precision channel
		—	—	10*3	pF	Normal-precision channel
Analog input resistance	Rs	—	—	6*3	kΩ	High-precision channel
		—	—	14*3	kΩ	Normal-precision channel
Analog input voltage range	Ain	0	—	VREFH0	V	—
Resolution		—	—	12	Bit	—
Conversion time*1 (Operation at PCLKC = 8 MHz)	Permissible signal source impedance Max. = 5 kΩ	4.75 (1.313)*4	—	—	μs	High-precision channel ADCSR.ADHSC = 1 ADSSTRn.SST[7:0] = 0x0A ADACSR.ADSAC = 1
		6.0 (2.563)*4	—	—	μs	Normal-precision channel ADCSR.ADHSC = 1 ADSSTRn.SST[7:0] = 0x14 ADACSR.ADSAC = 1

Table 43.50 A/D conversion characteristics (5) in low-power A/D conversion mode (2 of 2)

Conditions: VCC = AVCC0 = VREFH0 = 1.8 to 3.6 V*5 (AVCC0 = VCC when VCC < 2.0 V), VSS = AVSS0 = VREFL0 = 0 V
Reference voltage range applied to the VREFH0 and VREFL0.

Parameter	Min	Typ	Max	Unit	Test conditions
Offset error	—	±1.25	±7.5	LSB	High-precision channel
			±10.0	LSB	Other than specified
Full-scale error	—	±1.5	±7.5	LSB	High-precision channel
			±10.0	LSB	Other than specified
Quantization error	—	±0.5	—	LSB	—
Absolute accuracy	—	±3.75	±9.5	LSB	High-precision channel
			±13.5	LSB	Other than specified
DNL differential nonlinearity error	—	±2.0	—	LSB	—
INL integral nonlinearity error	—	±2.25	±4.5	LSB	—

Note: The characteristics apply when no pin functions other than 12-bit A/D converter input are used. Absolute accuracy does not include quantization errors. Offset error, full-scale error, DNL differential nonlinearity error, and INL integral nonlinearity error do not include quantization errors.
Note 1. The conversion time is the sum of the sampling time and the comparison time. The number of sampling states is indicated for the test conditions.
Note 2. Except for I/O input capacitance (Cin), see section 43.2.4. I/O V_{OH}, V_{OL}, and Other Characteristics.
Note 3. Reference data.
Note 4. ( ) lists sampling time.
Note 5. When VREFH0 < AVCC0, the MAX. values are as follows.
Absolute accuracy/Offset error/Full-scale error:
For voltage difference between AVCC0 and VREFH0, it should be added ±0.75 LSB/V to the Max spec.
INL integral non-linearity error:
For voltage difference between AVCC0 and VREFH0, it should be added ±0.2 LSB/V to the Max spec.

Table 43.51 A/D conversion characteristics (6) in low-power A/D conversion mode (1 of 2)

Conditions: VCC = AVCC0 = VREFH0 = 1.6 to 3.6 V*5 (AVCC0 = VCC when VCC < 2.0 V), VSS = AVSS0 = VREFL0 = 0 V
Reference voltage range applied to the VREFH0 and VREFL0.

Parameter		Min	Typ	Max	Unit	Test conditions
PCLKC (ADCLK) frequency		1	—	4	MHz	—
Analog input capacitance*2	Cs	—	—	9*3	pF	High-precision channel
		—	—	10*3	pF	Normal-precision channel
Analog input resistance	Rs	—	—	12*3	kΩ	High-precision channel
		—	—	28*3	kΩ	Normal-precision channel
Analog input voltage range	Ain	0	—	VREFH0	V	—
Resolution		—	—	12	Bit	—
Conversion time*1 (Operation at PCLKC = 4 MHz)	Permissible signal source impedance Max. = 9.9 kΩ	9.5 (2.625)*4	—	—	μs	High-precision channel ADCSR.ADHSC = 1 ADSSTRn.SST[7:0] = 0x0A ADACSR.ADSAC = 1
		12.0 (5.125)*4	—	—	μs	Normal-precision channel ADCSR.ADHSC = 1 ADSSTRn.SST[7:0] = 0x14 ADACSR.ADSAC = 1
Offset error		—	±1.25	±7.5	LSB	High-precision channel
				±10.0	LSB	Other than specified
Full-scale error		—	±1.5	±7.5	LSB	High-precision channel
				±10.0	LSB	Other than specified
Quantization error		—	±0.5	—	LSB	—

Table 43.51 A/D conversion characteristics (6) in low-power A/D conversion mode (2 of 2)

Conditions: VCC = AVCC0 = VREFH0 = 1.6 to 3.6 V*5 (AVCC0 = VCC when VCC < 2.0 V), VSS = AVSS0 = VREFL0 = 0 V
Reference voltage range applied to the VREFH0 and VREFL0.

Parameter	Min	Typ	Max	Unit	Test conditions
Absolute accuracy	—	±3.75	±9.5	LSB	High-precision channel
			±13.5	LSB	Other than specified
DNL differential nonlinearity error	—	±2.0	—	LSB	—
INL integral nonlinearity error	—	±2.25	±4.5	LSB	—

Note: The characteristics apply when no pin functions other than 12-bit A/D converter input are used. Absolute accuracy does not include quantization errors. Offset error, full-scale error, DNL differential nonlinearity error, and INL integral nonlinearity error do not include quantization errors.
Note 1. The conversion time is the sum of the sampling time and the comparison time. The number of sampling states is indicated for the test conditions.
Note 2. Except for I/O input capacitance (Cin), see section 43.2.4. I/O V_{OH}, V_{OL}, and Other Characteristics.
Note 3. Reference data.
Note 4. ( ) lists sampling time.
Note 5. When VREFH0 < AVCC0, the MAX. values are as follows.
Absolute accuracy/Offset error/Full-scale error:
For voltage difference between AVCC0 and VREFH0, it should be added ±0.75 LSB/V to the Max spec.
INL integral non-linearity error:
For voltage difference between AVCC0 and VREFH0, it should be added ±0.2 LSB/V to the Max spec.

Figure 43.44 shows the equivalent circuit for analog input.

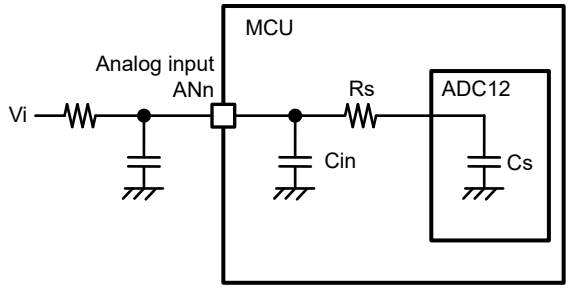

Note: Terminal leakage current is not shown in this figure.

Figure 43.44 Equivalent circuit for analog input

Table 43.52 12-bit A/D converter channel classification

Classification	Channel	Conditions	Remarks
High-precision channel	AN000 to AN006	AVCC0 = 1.6 to 3.6 V	Pins AN000 to AN006 cannot be used as general I/O, when the A/D converter is in use.
Normal-precision channel	AN017 to AN025		
Internal reference voltage input channel	Internal reference voltage	AVCC0 = 1.8 to 3.6 V	—
Temperature sensor input channel	Temperature sensor output	AVCC0 = 1.8 to 3.6 V	—

Table 43.53 A/D internal reference voltage characteristics

Conditions: VCC = AVCC0 = VREFH0 = 1.8 to 3.6 V*1

Parameter	Min	Typ	Max	Unit	Test conditions
Internal reference voltage input channel*2	1.42	1.48	1.54	V	—
PCLKC (ADCLK) frequency*3	1	—	2	MHz	—
Sampling time*4	5.0	—	—	μs	—

Note 1. The internal reference voltage cannot be selected for input channels when AVCC0 < 1.8 V.

Note 2. The 12-bit A/D internal reference voltage indicates the voltage when the internal reference voltage is input to the 12-bit A/D converter.
Note 3. When the internal reference voltage is selected as the high-potential reference voltage.
Note 4. When the internal reference voltage is converted.

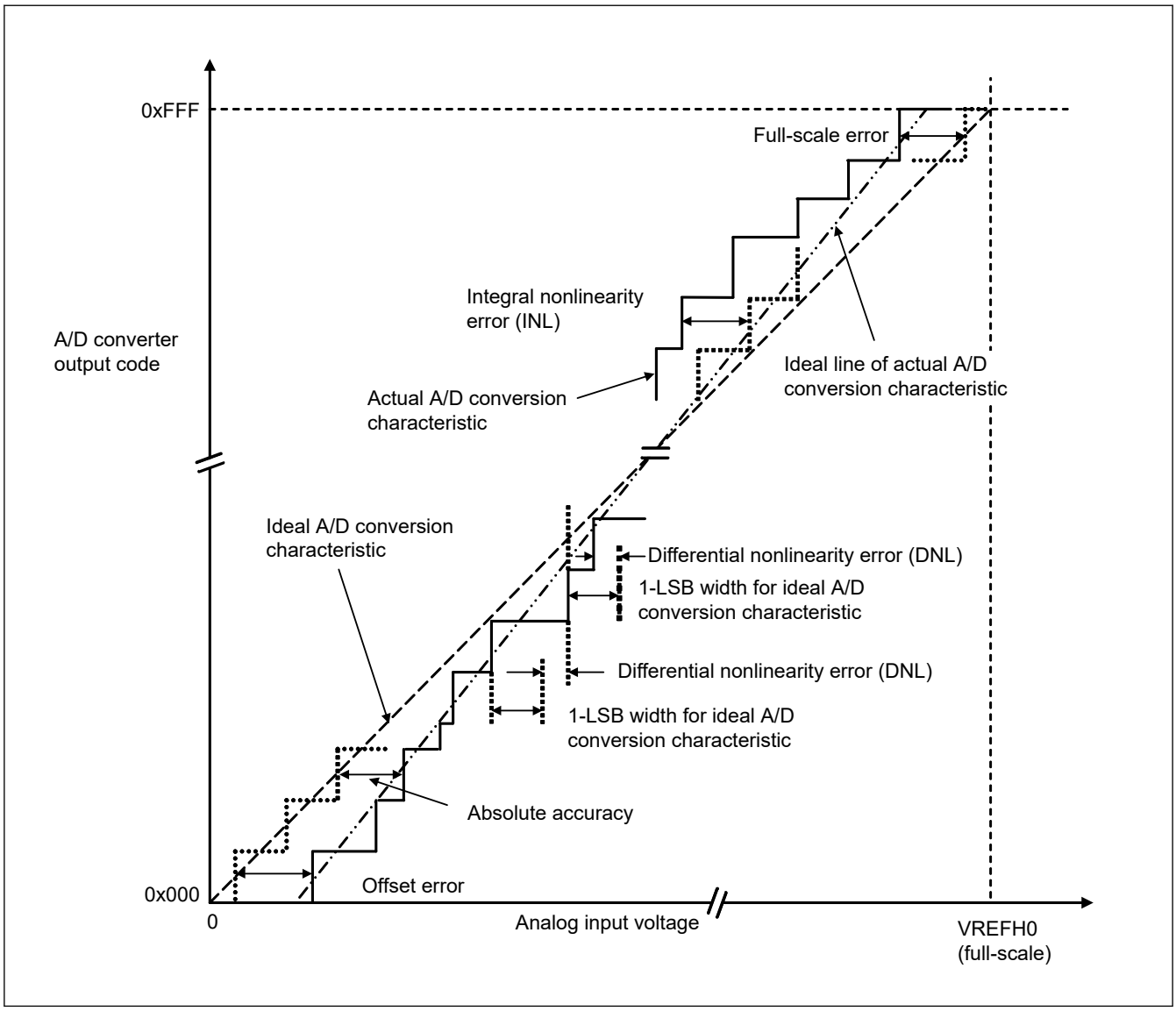

Figure 43.45 Illustration of 12-bit A/D converter characteristic terms

Absolute accuracy

Absolute accuracy is the difference between output code based on the theoretical A/D conversion characteristics, and the actual A/D conversion result. When measuring absolute accuracy, the voltage at the midpoint of the width of the analog input voltage (1-LSB width), which can meet the expectation of outputting an equal code based on the theoretical A/D conversion characteristics, is used as the analog input voltage. For example, if 12-bit resolution is used and the reference voltage VREFH0 = 3.072 V, then 1-LSB width becomes 0.75 mV, and 0 mV, 0.75 mV, and 1.5 mV are used as the analog input voltages. If analog input voltage is 6 mV, an absolute accuracy of ±5 LSB means that the actual A/D conversion result is in the range of 0x003 to 0x00D, though an output code of 0x008 can be expected from the theoretical A/D conversion characteristics.

Integral nonlinearity error (INL)

Integral nonlinearity error is the maximum deviation between the ideal line when the measured offset and full-scale errors are zeroed, and the actual output code.

Differential nonlinearity error (DNL)

Differential nonlinearity error is the difference between 1-LSB width based on the ideal A/D conversion characteristics and the width of the actual output code.

Offset error

Offset error is the difference between the transition point of the ideal first output code and the actual first output code.

Full-scale error

Full-scale error is the difference between the transition point of the ideal last output code and the actual last output code.

43.5 TSN Characteristics

Table 43.54 TSN characteristics

Conditions: VCC = AVCC0 = 1.8 to 3.6 V

Parameter	Symbol	Min	Typ	Max	Unit	Test conditions
Relative accuracy	—	—	±1.5	—	°C	VCC = AVCC0 ≥ 2.4 V*1
		—	±2.0	—	°C	VCC = AVCC0 < 2.4 V*1
		—	±1.0	—	°C	VCC = AVCC0 ≥ 2.4 V*2
Temperature slope	—	—	-3.3	—	mV/°C	—
Output voltage (at 25 °C)	—	—	1.05	—	V	VCC = 3.3 V
Temperature sensor start time	t_{START}	—	—	5	μs	—
Sampling time	—	5	—	—	μs	

Note 1. Temperature slope used -3.3 mV/°C

Note 2. Temperature slope calculation points used the evaluated 2 points. Refer to section 36.3.1. Preparation for Using the Temperature Sensor.

43.6 OSC Stop Detect Characteristics

Table 43.55 Oscillation stop detection circuit characteristics

Parameter	Symbol	Min	Typ	Max	Unit	Test conditions
Detection time	t_{dr}	—	—	1	ms	Figure 43.46

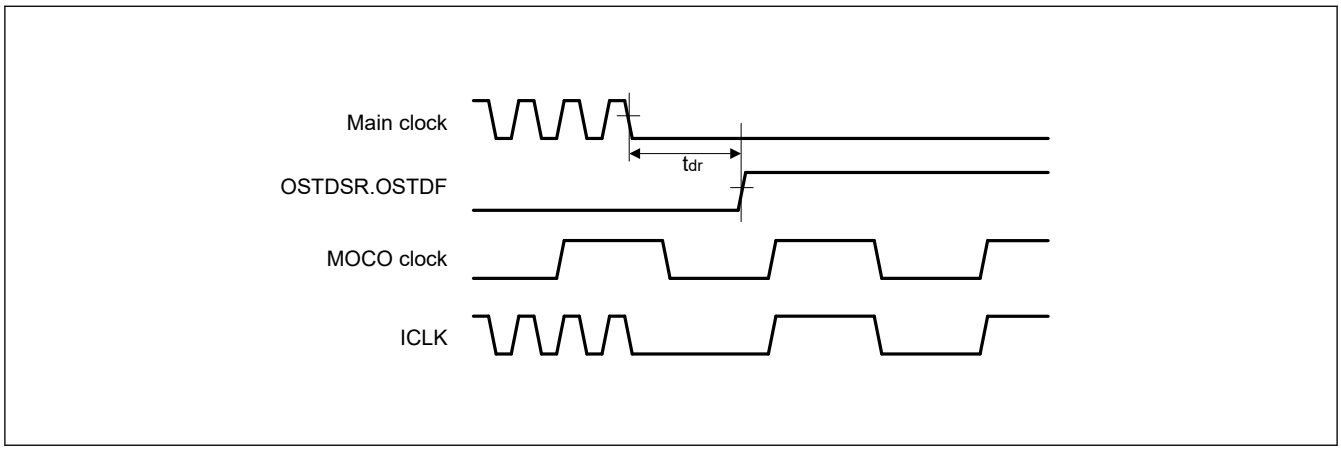

Figure 43.46 Oscillation stop detection timing

43.7 POR and LVD Characteristics

Table 43.56 Power-on reset circuit and voltage detection circuit characteristics (1) (1 of 2)

Parameter		Symbol	Min	Typ	Max	Unit	Test Conditions
Power-on reset (POR)	When power supply rise	V_{POR}	1.47	1.51	1.55	V	Figure 43.47, Figure 43.48
	When power supply fall	V_{POR}	1.46	1.50	1.54		Figure 43.47
Voltage detection circuit (LVD0)*1	When power supply rise	V_{det0_0}	2.73	2.9	3.01	V	Figure 43.49
	When power supply fall		2.68	2.85	2.96		
	When power supply rise	V_{det0_1}	2.44	2.59	2.70		
	When power supply fall		2.38	2.53	2.64		
	When power supply rise	V_{det0_2}	1.83	1.95	2.07		
	When power supply fall		1.78	1.90	2.02		
	When power supply rise	V_{det0_3}	1.66	1.75	1.88		
	When power supply fall		1.60	1.69	1.82		
Voltage detection circuit (LVD1)*2	When power supply rise	V_{det1_0}	3.05	3.17	3.29	V	Figure 43.50
	When power supply fall		2.98	3.10	3.22		
	When power supply rise	V_{det1_1}	2.95	3.06	3.17		
	When power supply fall		2.89	3.00	3.11		
	When power supply rise	V_{det1_2}	2.86	2.97	3.08		
	When power supply fall		2.79	2.90	3.01		
	When power supply rise	V_{det1_3}	2.74	2.85	2.96		
	When power supply fall		2.68	2.79	2.90		
	When power supply rise	V_{det1_4}	2.63	2.75	2.85		
	When power supply fall		2.58	2.68	2.78		
	When power supply rise	V_{det1_5}	2.54	2.64	2.75		
	When power supply fall		2.48	2.58	2.68		
	When power supply rise	V_{det1_6}	2.43	2.53	2.63		
	When power supply fall		2.38	2.48	2.58		
	When power supply rise	V_{det1_7}	2.16	2.26	2.36		
	When power supply fall		2.10	2.20	2.30		
	When power supply rise	V_{det1_8}	1.88	2	2.09		
	When power supply fall		1.84	1.96	2.05		
	When power supply rise	V_{det1_9}	1.78	1.9	1.99		
	When power supply fall		1.74	1.86	1.95		
	When power supply rise	V_{det1_A}	1.67	1.79	1.88		
	When power supply fall		1.63	1.75	1.84		
	When power supply rise	V_{det1_B}	1.65	1.7	1.78		
	When power supply fall		1.60	1.65	1.73		

Table 43.56 Power-on reset circuit and voltage detection circuit characteristics (1) (2 of 2)

Parameter		Symbol	Min	Typ	Max	Unit	Test Conditions
Voltage detection circuit (LVD2)*3	When power supply rise	V_{det2_0}	3.06	3.19	3.32	V	Figure 43.51
	When power supply fall		3.00	3.13	3.26		
	When power supply rise	V_{det2_1}	2.86	2.98	3.10		
	When power supply fall		2.80	2.92	3.04		
	When power supply rise	V_{det2_2}	2.66	2.78	2.90		
	When power supply fall		2.60	2.71	2.82		
	When power supply rise	V_{det2_3}	2.46	2.57	2.68		
	When power supply fall		2.40	2.50	2.60		
	When power supply rise	V_{det2_4}	2.26	2.36	2.46		
	When power supply fall		2.20	2.30	2.40		
	When power supply rise	V_{det2_5}	2.06	2.15	2.24		
	When power supply fall		2.00	2.09	2.18		
	When power supply rise	V_{det2_6}	1.86	1.94	2.02		
	When power supply fall		1.80	1.88	1.96		
	When power supply rise	V_{det2_7}	1.66	1.73	1.80		
	When power supply fall		1.60	1.67	1.74		

Note: These characteristics apply when noise is not superimposed on the power supply.
Note 1. # in the symbol $V_{det0_\#}$ denotes the value of the OFS1.VDSEL0[1:0] bits.
Note 2. # in the symbol $V_{det1_\#}$ denotes the value of the LVD1CMPCR.LVD1LVL[3:0] bits.
Note 3. # in the symbol $V_{det2_\#}$ denotes the value of the LVD2CMPCR.LVD2LVL[2:0] bits.

Table 43.57 Power-on reset circuit and voltage detection circuit characteristics (2) (1 of 2)

Parameter		Symbol	Min	Typ	Max	Unit	Test Conditions
Wait time after power-on reset cancellation	LVD0: enable	t_{POR}	—	4.9	—	ms	—
	LVD0: disable	t_{POR}	—	4.2	—	ms	—
Wait time after voltage monitor 0, 1, 2 reset cancellation	LVD0: enable*1	$t_{LVD0,1,2}$	—	0.94	—	ms	—
	LVD0: disable*2	$t_{LVD1,2}$	—	0.25	—	ms	—
Power-on reset response delay time*3		t_{det}	—	—	500	μs	Figure 43.47, Figure 43.48
LVD0 response delay time*3		t_{det}	—	—	500	μs	Figure 43.49
LVD1 response delay time*3		t_{det}	—	—	600	μs	Figure 43.50
LVD2 response delay time*3		t_{det}	—	—	600	μs	Figure 43.51
Minimum VCC down time	POR	t_{VOFF}	500	—	—	μs	Figure 43.47
	LVD0		300	—	—	μs	Figure 43.49
	LVD1		300	—	—	μs	Figure 43.50
	LVD2		600	—	—	μs	Figure 43.51
Power-on reset enable time		$t_{W\ (POR)}$	1	—	—	ms	Figure 43.48, VCC = below 1.0 V
LVD1 operation stabilization time (after LVD1 is enabled)		$T_{d\ (E-A)}$	—	—	350	μs	Figure 43.50
LVD2 operation stabilization time (after LVD2 is enabled)		$T_{d\ (E-A)}$	—	—	600	μs	Figure 43.51
Hysteresis width (POR)		V_{PORH}	—	10	—	mV	—

Table 43.57 Power-on reset circuit and voltage detection circuit characteristics (2) (2 of 2)

Parameter	Symbol	Min	Typ	Max	Unit	Test Conditions
Hysteresis width (LVD0, LVD1 and LVD2)	V_{LVH}	—	60	—	mV	LVD0 selected
		—	70	—		V_{det1_0} to V_{det1_5} selected
		—	60	—		V_{det1_6} to V_{det1_7} selected
		—	50	—		V_{det1_8} to V_{det1_B} selected
		—	70	—		LVD2 selected

Note 1. When OFS1.LVDAS = 0.
Note 2. When OFS1.LVDAS = 1.
Note 3. The minimum VCC down time indicates the time when VCC is below the minimum value of voltage detection levels V_{POR}, V_{det0}, V_{det1}, and V_{det2} for the POR/LVD.

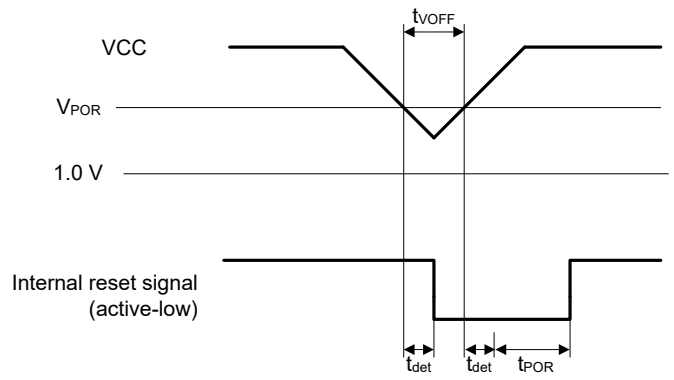

Figure 43.47 Voltage detection reset timing

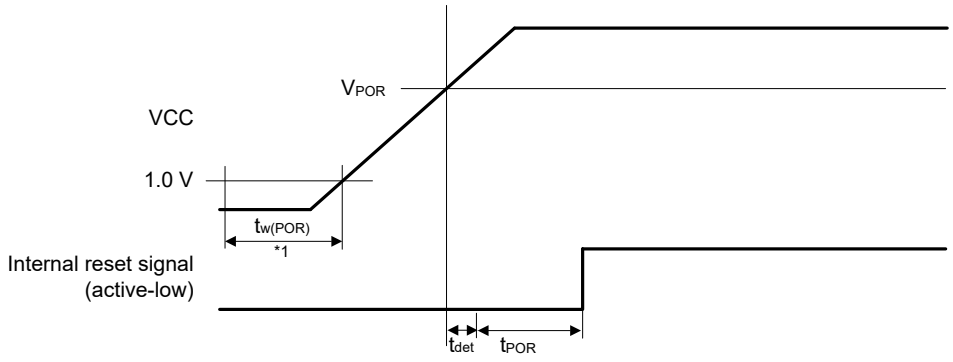

Note 1. $t_{w(POR)}$ is the time required for a power-on reset to be enabled while the external power VCC is being held below the valid voltage (1.0 V).
When VCC turns on, maintain $t_{w(POR)}$ for 1.0 ms or more.

Figure 43.48 Power-on reset timing

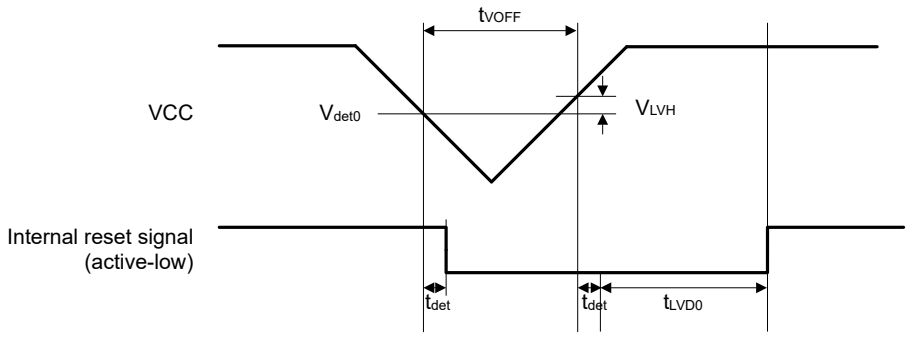

Figure 43.49 Voltage detection circuit timing (V_{det0})

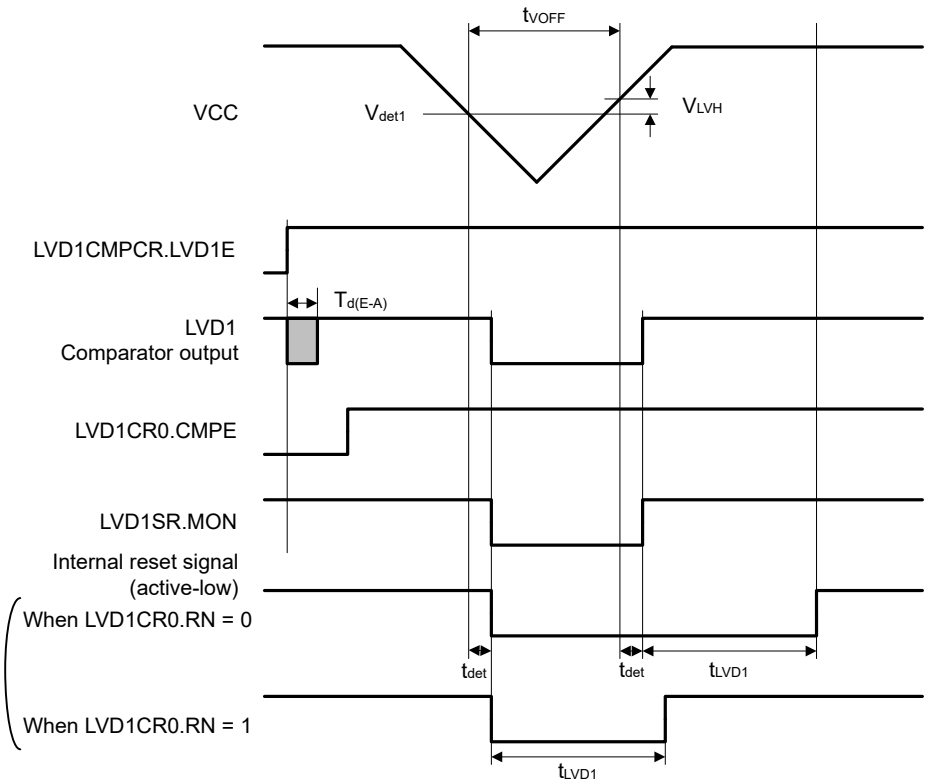

Figure 43.50 Voltage detection circuit timing (V_{det1})

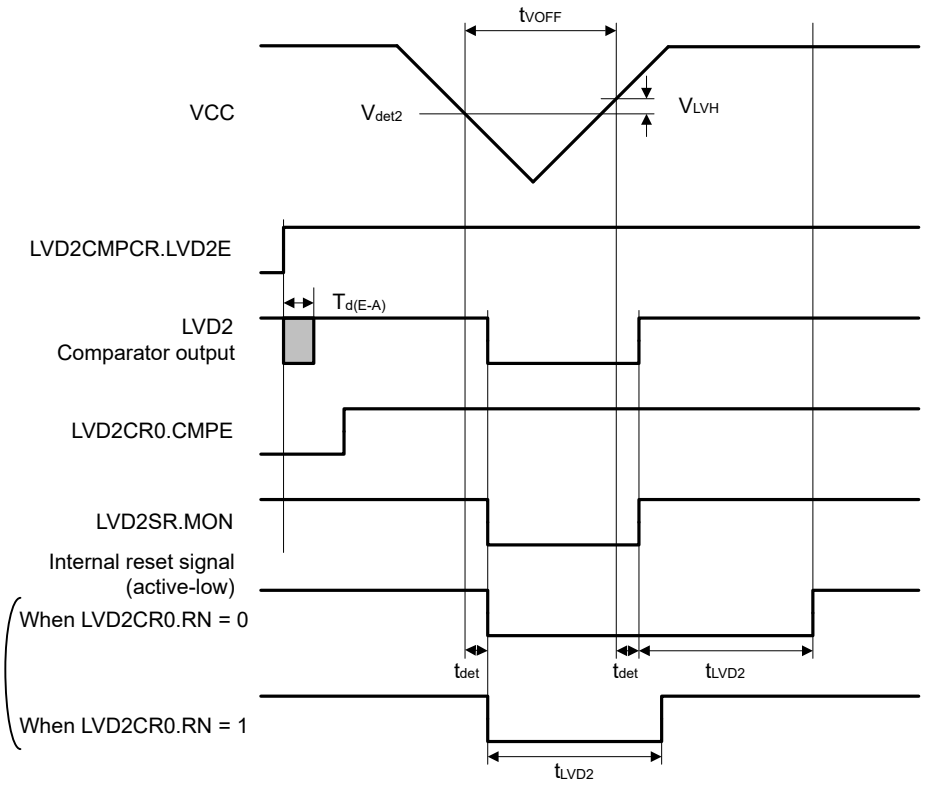

Figure 43.51 Voltage detection circuit timing (V_{det2})

43.8 VRTC POR Characteristics

Table 43.58 Power-on reset circuit of VRTC characteristics

Parameter			Symbol	Min	Typ	Max	Unit	Test Conditions
Voltage detection level	Power-on reset of VRTC (VRTC_POR)	When power supply rise	V_{RTCPOR}	1.51	1.55	1.59	V	Figure 43.52
		When power supply fall	V_{RTCPDR}	1.49	1.53	1.57		
Minimum pulse width	$t_{RTCVOFF}$		—	500	—	—	μs	Figure 43.52
Hysteresis width of VRTC (VRTC_POR)			$V_{RTCPORH}$	—	20	—	mV	—
Wait time after power-on reset cancellation			t_{RTCPOR}	—	—	12	ms	Figure 43.52
Power-on reset of VRTC response delay time*1			t_{rtcdet}	—	—	500	μs	Figure 43.52
Power-on reset of VRTC enable time*1			$t_{W\ (VRTC_POR)}$	1	—	—	ms	Figure 43.52, VRTC = below 1.0 V

Note 1. The minimum VRTC down time indicates the time when VRTC is below the minimum value of the voltage detection level of VRTC_POR.

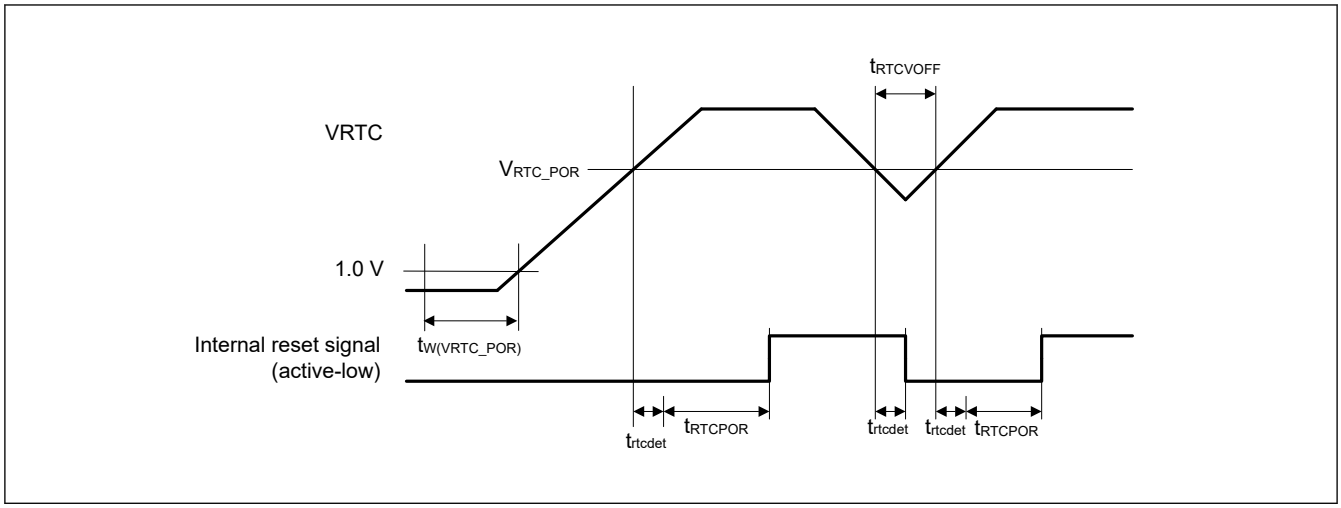

Figure 43.52 Voltage detection reset timing and power-on reset timing of VRTC

43.9 EXLVDVBAT Pin Voltage Detection Characteristics

Table 43.59 EXLVDVBAT pin voltage detection characteristics

Conditions: VCC = AVCC = 1.6 to 3.6 V

Parameter	Symbol	Conditions	Min	Typ	Max	Unit	Test conditions
Internal reference voltage	$V_{LVDVBAT0}$	Rising	1.61	1.65	1.70	V	—
		Falling	1.55	1.59	1.63		—
	$V_{LVDVBAT1}$	Rising	2.17	2.24	2.31		—
		Falling	2.12	2.18	2.24		—
	$V_{LVDVBAT2}$	Rising	2.37	2.44	2.51		—
		Falling	2.31	2.38	2.45		—
	$V_{LVDVBAT3}$	Rising	2.56	2.64	2.72		—
		Falling	2.50	2.58	2.66		—
	$V_{LVDVBAT4}$	Rising	2.66	2.74	2.82		—
		Falling	2.60	2.68	2.76		—
	$V_{LVDVBAT5}$	Rising	2.76	2.84	2.92		—
		Falling	2.70	2.78	2.86		—
	$V_{LVDVBAT6}$	Rising	3.05	3.14	3.23		—
		Falling	2.99	3.08	3.17		—
Minimum pulse width	$t_{pw_lvdvbat}$	—	500	—	—	μs	Figure 43.53
Detection delay time	$t_{d_lvdvbat}$	—	—	—	500	μs	Figure 43.53
Operation stabilization time (after EXLVDVBAT is enabled)	$t_{d(E-A)_lvdvbat}$	—	—	—	500	μs	Figure 43.53
Setting change stabilization time	$t_{d_set_lvdvbat}$	—	—	—	500	μs	—
Pin resistor	$r_{in_lvdvbat}$	VBTLVDCR.LVDE = 1	80	150	280	MΩ	—

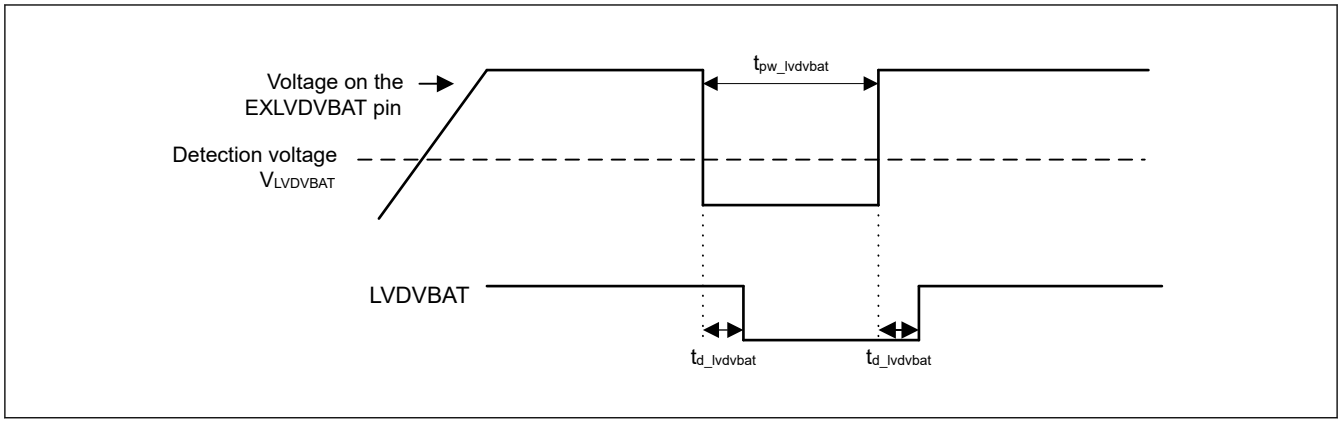

Figure 43.53 EXLVDVBAT pin voltage detection circuit timing

43.10 VRTC Pin Voltage Detection Characteristics

Table 43.60 VRTC pin voltage detection characteristics

Conditions: VCC = AVCC = 1.6 to 3.6 V, VRTC = 1.6 to 3.6 V

Parameter	Symbol	Conditions	Min	Typ	Max	Unit	Test conditions
Internal reference voltage	$V_{LVDVRTC0}$	Rising	1.61	1.65	1.70	V	—
		Falling	1.55	1.59	1.63		—
	$V_{LVDVRTC1}$	Rising	1.80	1.85	1.90		—
		Falling	1.74	1.79	1.84		—
	$V_{LVDVRTC2}$	Rising	1.99	2.05	2.11		—
		Falling	1.94	1.99	2.05		—
	$V_{LVDVRTC3}$	Rising	2.19	2.25	2.31		—
		Falling	2.13	2.19	2.25		—
	$V_{LVDVRTC4}$	Rising	2.38	2.45	2.52		—
		Falling	2.33	2.39	2.46		—
	$V_{LVDVRTC5}$	Rising	2.58	2.65	2.72		—
		Falling	2.52	2.59	2.66		—
	$V_{LVDVRTC6}$	Rising	2.77	2.85	2.93		—
		Falling	2.71	2.79	2.87		—
	$V_{LVDVRTC7}$	Rising	2.97	3.05	3.13		—
		Falling	2.91	2.99	3.07		—
Minimum pulse width	$t_{pw_lvdvrtc}$	—	500	—	—	μs	Figure 43.54
Detection delay time	$t_{d_lvdvrtc}$	—	—	—	500	μs	Figure 43.54
Operation stabilization time (after LVDVRTC is enabled)	$t_{d(E-A)_lvdvrtc}$	—	—	—	300	μs	Figure 43.54
Setting change stabilization time	$t_{d_set_lvdvrtc}$	—	—	—	1	ms	—
Pin resistor	$r_{in_lvdvrtc}$	VBTLVDCR.LVDE = 1	80	150	280	MΩ	—

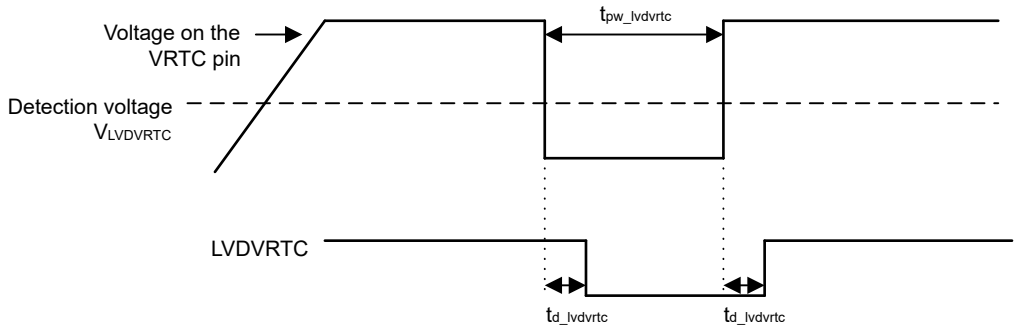

Figure 43.54 VRTC pin voltage detection circuit timing

43.11 EXLVD Pin Voltage Detections

Table 43.61 EXLVD pin voltage detection characteristics

Conditions: VCC = AVCC = 1.6 to 3.6 V

Parameter	Symbol	Conditions	Min	Typ	Max	Unit	Test conditions
Internal reference voltage	$V_{LVDEXLVD}$	Rising	1.25	1.33	1.41	V	—
		Falling	1.20	1.28	1.36		—
Minimum pulse width	$t_{pw_lvdexlvd}$	—	500	—	—	μs	Figure 43.55
Detection delay time	t_{d_exlvd}	—	—	—	500	μs	Figure 43.55
Operation stabilization time (after EXLVD is enabled)	$t_{d(E-A)_exlvd}$	—	—	—	300	μs	Figure 43.55
Pin resistor	r_{in_exlvd}	EXLVD CR.LVDE = 1	30	60	115	MΩ	—

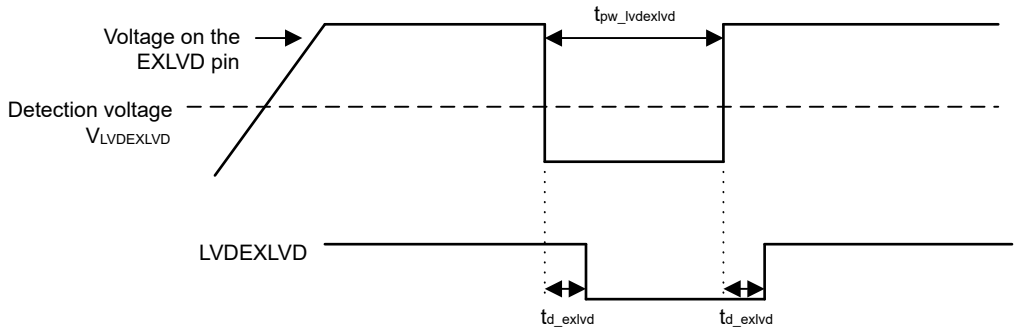

Figure 43.55 EXLVD pin voltage detection circuit timing

43.12 Segment LCD Controller Characteristics

43.12.1 External Resistance Division Method

(1) Static display mode

Table 43.62 External resistance division method LCD characteristics (1)

Conditions: VL4 (Min) ≤ VCC = AVCC ≤ 3.6 V, VSS = AVSS = 0 V

Parameter	Symbol	Min	Typ	Max	Unit	Test conditions
LCD drive voltage	V_{L4}	2.0	—	VCC	V	—

(2) 1/2 bias method, 1/4 bias method

Table 43.63 External resistance division method LCD characteristics (2)

Conditions: VL4 (Min) ≤ VCC = AVCC ≤ 3.6 V, VSS = AVSS = 0 V

Parameter	Symbol	Min	Typ	Max	Unit	Test conditions
LCD drive voltage	V_{L4}	2.7	—	VCC	V	—

(3) 1/3 bias method

Table 43.64 External resistance division method LCD characteristics (3)

Conditions: VL4 (Min) ≤ VCC = AVCC ≤ 3.6 V, VSS = AVSS = 0 V

Parameter	Symbol	Min	Typ	Max	Unit	Test conditions
LCD drive voltage	V_{L4}	2.5	—	VCC	V	—

43.12.2 Internal Voltage Boosting Method (VL1 Reference)

(1) 1/3 bias method

Table 43.65 Internal voltage boosting method LCD characteristics (1)

Conditions: VCC = AVCC = 1.8 V to 3.6 V, VSS = AVSS = 0 V

Parameter	Symbol	Conditions		Min	Typ	Max	Unit	Test conditions
LCD output voltage variation range	V_{L1}	C1 to C4*5 = 0.47 μF	VLCD*1 = 0x04	0.97	1.01	1.04	V	—
			VLCD = 0x05	1.00	1.04	1.08	V	—
			VLCD = 0x06	1.04	1.07	1.11	V	—
			VLCD = 0x07	1.07	1.11	1.14	V	—
			VLCD = 0x08	1.10	1.14	1.18	V	—
			VLCD = 0x09	1.13	1.17	1.21	V	—
			VLCD = 0x0A	1.16	1.21	1.25	V	—
			VLCD = 0x0B	1.20	1.24	1.28	V	—
			VLCD = 0x0C	1.23	1.27	1.32	V	—
			VLCD = 0x0D	1.26	1.31	1.35	V	—
			VLCD = 0x0E	1.29	1.34	1.38	V	—
			VLCD = 0x0F	1.33	1.37	1.42	V	—
			VLCD = 0x10	1.36	1.40	1.45	V	—
			VLCD = 0x11	1.39	1.44	1.49	V	—
			VLCD = 0x12	1.42	1.47	1.52	V	—
			VLCD = 0x13	1.45	1.50	1.55	V	—
			VLCD = 0x14	1.49	1.54	1.59	V	—
			VLCD = 0x15	1.52	1.57	1.62	V	
			VLCD = 0x16	1.55	1.60	1.66	V	—
			VLCD = 0x17	1.58	1.64	1.69	V	—
			VLCD = 0x18	1.61	1.67	1.73	V	—
			VLCD = 0x19	1.65	1.70	1.76	V	—
			VLCD = 0x1A*4	1.68	1.74	1.79	V	—
Double output voltage	V_{L2}	C1 to C4*5 = 0.47 μF		2 × V_{L1} - 5%	2 × V_{L1}	2 × V_{L1} + 5%	V	—
Triple output voltage	V_{L4}	C1 to C4*5 = 0.47 μF		3 × V_{L1} - 6%	3 × V_{L1}	3 × V_{L1} + 6%	V	—
Reference voltage setup time*2	t_{VL1S}	—		10	—	—	ms	Figure 43.56
Voltage boost wait time*3	t_{VLWT}	—		500	—	—	ms	Figure 43.56

Note: 0x0E to 0x1A setting is permitted when using 5V LCD panel, 0x04 to 0x07 setting is permitted when using 3V LCD panel at 1/3 bias.

Note 1. Bit [7] (MDSET[2]) of register VLCD is set to 0 and bits [7:6] (MDSET[1:0]) of register LCDM0 are set to 01 for internal voltage boosting method (VL1 reference), and bits [4:0] (VLCD4-0) of register VLCD are used for voltage variation setting.

Note 2. This is the time required to wait from when the reference voltage is specified by using the VLCD register (or when the internal voltage boosting method is selected (by setting the MDSET[1:0] bits of the LCDM0 register to 01b and MDSET[2] of the register VLCD to 0) if the default value reference voltage is used) until voltage boosting starts (VLCON = 1).

Note 3. This is the wait time from when voltage boosting is started (VLCON = 1) until display is enabled (LCDON = 1).

Note 4. This setting is only available when VCC ≥ VL1.

Note 5. This is a capacitor that is connected between the voltage pins that are used to drive the LCD.

C1: A capacitor connected between CAPH and CAPL

C2: A capacitor connected between VL1 and GND

C3: A capacitor connected between VL2 and GND

C4: A capacitor connected between VL4 and GND

C1 = C2 = C3 = C4 = 0.47 μF ±30%

(2) 1/4 bias method

Table 43.66 Internal voltage boosting method LCD characteristics (2)

Conditions: VCC = AVCC = 1.8 V to 3.6 V, VSS = AVSS = 0 V

Parameter	Symbol	Conditions		Min	Typ	Max	Unit	Test conditions
LCD output voltage variation range	V_{L1}	C1 to C5*1 = 0.47 μF	VLCD*2 = 0x04	0.97	1.01	1.04	V	—
			VLCD = 0x05	1.00	1.04	1.08	V	—
			VLCD = 0x06	1.04	1.07	1.11	V	—
			VLCD = 0x07	1.07	1.11	1.14	V	—
			VLCD = 0x08	1.10	1.14	1.18	V	—
			VLCD = 0x09	1.13	1.17	1.21	V	—
			VLCD = 0x0A	1.16	1.21	1.25	V	—
			VLCD = 0x0B	1.20	1.24	1.28	V	—
			VLCD = 0x0C	1.23	1.27	1.32	V	—
			VLCD = 0x0D	1.26	1.31	1.35	V	—
Double output voltage	V_{L2}	C1 to C5*1 = 0.47 μF		2 × V_{L1} - 5%	2 × V_{L1}	2 × V_{L1} + 5%	V	—
Triple output voltage	V_{L3}	C1 to C5*1 = 0.47 μF		3 × V_{L1} - 6%	3 × V_{L1}	3 × V_{L1} + 6%	V	—
Quadruple output voltage	V_{L4}*5	C1 to C5*1 = 0.47 μF		4 × V_{L1} - 6%	4 × V_{L1}	4 × V_{L1} + 6%	V	—
Reference voltage setup time*3	t_{VL1S}	—		10	—	—	ms	Figure 43.56
Voltage boost wait time*4	t_{VLWT}	—		500	—	—	ms	Figure 43.56

Note 1. This is a capacitor that is connected between the voltage pins that are used to drive the LCD.

C1: A capacitor connected between CAPH and CAPL

C2: A capacitor connected between VL1 and GND

C3: A capacitor connected between VL2 and GND

C4: A capacitor connected between VL3 and GND

C5: A capacitor connected between VL4 and GND

C1 = C2 = C3 = C4 = C5 = 0.47 μF ±30%

Note 2. Bit [7] (MDSET[2]) of register VLCD is set to 0 and bits [7:6] (MDSET[1:0]) of register LCDM0 are set to 01 for internal voltage boosting method (VL1 reference), and bits [4:0] (VLCD4-0) of register VLCD are used for voltage variation setting.

Note 3. This is the time required to wait from when the reference voltage is specified by using the VLCD register (or when the internal voltage boosting method is selected (by setting the MDSET[1:0] bits of the LCDM0 register to 01b and MDSET[2] of the register VLCD to 0) if the default value reference voltage is used) until voltage boosting starts (VLCON = 1).

Note 4. This is the wait time from when voltage boosting is started (VLCON = 1) until display is enabled (LCDON = 1).

Note 5. V_{L4} must be 3.6 V or lower.

43.12.3 Internal Voltage Boosting Method (VL2 Reference)

(1) 1/3 bias method

Table 43.67 Internal voltage boosting method LCD characteristics (3) (1 of 2)

Conditions: VCC = AVCC = VL2 (Max) + 0.1 to 3.6 V, VSS = AVSS = 0 V

Parameter	Symbol	Conditions	Min	Typ	Max	Unit	Test conditions
Half output voltage	V_{L1}	C1 to C4*1 = 0.47 μF	1/2 × VL2 - 5%	1/2 × VL2	1/2 × VL2 + 5%	V	—

Table 43.67 Internal voltage boosting method LCD characteristics (3) (2 of 2)

Conditions: VCC = AVCC = VL2 (Max) + 0.1 to 3.6 V, VSS = AVSS = 0 V

Parameter	Symbol	Conditions		Min	Typ	Max	Unit	Test conditions
LCD output voltage variation range	V_{L2}	C1 to C4*1 = 0.47 μF	VLCD*2 = 0x84	1.94	2.02	2.11	V	—
			VLCD = 0x85	2.00	2.09	2.18	V	—
			VLCD = 0x86	2.07	2.16	2.25	V	—
			VLCD = 0x87	2.13	2.22	2.32	V	—
			VLCD = 0x88	2.19	2.29	2.39	V	—
			VLCD = 0x89	2.26	2.36	2.46	V	—
			VLCD = 0x8A	2.32	2.42	2.53	V	—
			VLCD = 0x8B	2.39	2.49	2.59	V	—
			VLCD = 0x8C	2.45	2.56	2.66	V	—
			VLCD = 0x8D	2.51	2.62	2.73	V	—
			VLCD = 0x8E	2.58	2.69	2.80	V	—
			VLCD = 0x8F	2.64	2.76	2.87	V	—
			VLCD = 0x90	2.70	2.82	2.94	V	—
			VLCD = 0x91	2.77	2.89	3.01	V	—
			VLCD = 0x92	2.83	2.96	3.08	V	—
			VLCD = 0x93	2.90	3.02	3.15	V	—
			VLCD = 0x94	2.96	3.09	3.22	V	—
			VLCD = 0x95	3.02	3.15	3.29	V	—
			VLCD = 0x96	3.09	3.22	3.35	V	—
			VLCD = 0x97	3.15	3.29	3.42	V	—
			VLCD = 0x98	3.21	3.35	3.49	V	—
			VLCD = 0x99	3.28	3.42	3.56	V	—
			VLCD = 0x9A	3.34	3.49	3.63	V	—
Two-thirds output voltage	V_{L4}*5	C1 to C4*1 = 0.47 μF		2/3 × V_{L2} - 6%	2/3 × V_{L2}	2/3 × V_{L2} + 6%	V	—
Reference voltage setup time*3	t_{VL2S}	—		10	—	—	ms	Figure 43.56
Voltage boost wait time*4	t_{VLWT}	—		500	—	—	ms	Figure 43.56

Note: 0x8E to 0x9A setting is permitted when using 5V LCD panel, 0x84 to 0x87 setting is permitted when using 3V LCD panel at 1/3 bias.

Note 1. This is a capacitor that is connected between the voltage pins that are used to drive the LCD.

C1: A capacitor connected between CAPH and CAPL

C2: A capacitor connected between VL1 and GND

C3: A capacitor connected between VL2 and GND

C4: A capacitor connected between VL4 and GND

C1 = C2 = C3 = C4 = 0.47 μF ±30%

Note 2. Bit [7] (MDSET[2]) of register VLCD is set to 1 and bits [7:6] (MDSET[1:0]) of register LCDM0 are set to 01 for internal voltage boosting method (VL2 reference), and bits [4:0] (VLCD4-0) of register VLCD are used for voltage variation setting.

Note 3. This is the time required to wait from when the reference voltage is specified by using the VLCD register (or when the internal voltage boosting method is selected (by setting the MDSET[1:0] bits of the LCDM0 register to 01b and MDSET[2] of the register VLCD to 1) if the default value reference voltage is used) until voltage boosting starts (VLCON = 1).

Note 4. This is the wait time from when voltage boosting is started (VLCON = 1) until display is enabled (LCDON = 1).

Note 5. V_{L4} must be 3.6 V or lower.

43.12.4 Capacitor Split Method (VCC Reference)

(1) 1/3 bias method

Table 43.68 Capacitor split method LCD characteristics (1)

Conditions: VCC = AVCC = 2.2 V to 3.6 V, VSS = AVSS = 0 V

Parameter	Symbol	Conditions	Min	Typ	Max	Unit	Test conditions
VL4 voltage	V_{L4}	C1 to C4*2 = 0.47 μF	—	VCC	—	V	—
VL2 voltage	V_{L2}	C1 to C4*2 = 0.47 μF	2 / 3 × V_{L4} - 3%	2 / 3 × V_{L4}	2 / 3 × V_{L4} + 3%	V	—
VL1 voltage	V_{L1}	C1 to C4*2 = 0.47 μF	1 / 3 × V_{L4} - 3%	1 / 3 × V_{L4}	1 / 3 × V_{L4} + 3%	V	—
Capacitor split wait time*1	t_{WAIT}	—	100	—	—	ms	Figure 43.56

Note: Bit [7] (MDSET[2]) of register VLCD is set to 0 and bits [7:6] (MDSET[1:0]) of register LCDM0 are set to 10 for capacitor split method (VCC reference).

Note 1. This is the wait time from when voltage bucking is started (VLCON = 1) until display is enabled (LCDON = 1).

Note 2. This is a capacitor that is connected between the voltage pins that are used to drive the LCD.

C1: A capacitor connected between CAPH and CAPL

C2: A capacitor connected between VL1 and GND

C3: A capacitor connected between VL2 and GND

C4: A capacitor connected between VL4 and GND

C1 = C2 = C3 = C4 = 0.47 μF ±30%

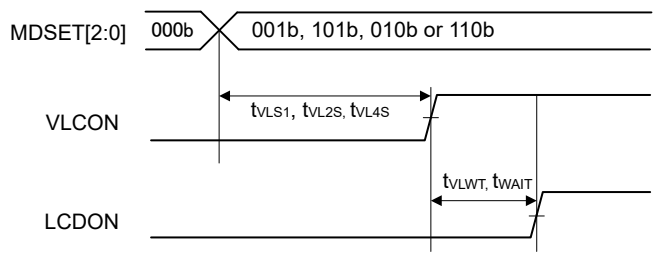

Figure 43.56 LCD reference voltage setup time, voltage boosting wait time, and capacitor split wait time

43.12.5 Capacitor Split Method (VL4 Reference)

(1) 1/3 bias method

Table 43.69 Capacitor split method LCD characteristics (3)

Conditions: VCC = AVCC = 3.2 V to 3.6 V, VSS = AVSS = 0 V

Parameter	Symbol	Conditions	Min	Typ	Max	Unit	Test conditions
VL4 voltage	V_{L4}	C1 to C4*2 = 0.47 μF	2.89	3.04	3.20	V	—
VL2 voltage	V_{L2}	C1 to C4*2 = 0.47 μF	1.89	2.03	2.17	V	—
VL1 voltage	V_{L1}	C1 to C4*2 = 0.47 μF	0.94	1.01	1.08	V	—
Reference voltage setup time*3	t_{VL4S}	—	10	—	—	ms	Figure 43.56
Capacitor split wait time*1	t_{WAIT}	—	100	—	—	ms	Figure 43.56

Note 1. This is the wait time from when voltage bucking is started (VLCON = 1) until display is enabled (LCDON = 1).

Note 2. This is a capacitor that is connected between the voltage pins that are used to drive the LCD.

C1: A capacitor connected between CAPH and CAPL

C2: A capacitor connected between VL1 and GND

C3: A capacitor connected between VL2 and GND

C4: A capacitor connected between VL4 and GND

C1 = C2 = C3 = C4 = 0.47 μF ±30%

Note 3. Bit [7] (MDSET[2]) of register VLCD is set to 1 and bits [7:6] (MDSET[1:0]) of register LCDM0 are set to 10 for capacitor split method (VL4 reference).

43.13 Flash Memory Characteristics

43.13.1 Code Flash Memory Characteristics

Table 43.70 Code flash characteristics (1)

Parameter		Symbol	Min	Typ	Max	Unit	Conditions
Reprogramming/erasure cycle*1		N_{PEC}	1000	—	—	Times	—
Data hold time	After 1000 times N_{PEC}	t_{DRP}	20*2 *3	—	—	Year	T_a = +85 °C T_a = +105 °C
			10	—	—	Year	T_a = +125 °C

Note 1. The reprogram/erase cycle is the number of erasures for each block. When the reprogram/erase cycle is n times (n = 1,000), erasing can be performed n times for each block. For instance, when 8-byte programming is performed 256 times for different addresses in 2-KB blocks, and then the entire block is erased, the reprogram/erase cycle is counted as one. However, programming the same address for several times as one erasure is not enabled (overwriting is prohibited).

Note 2. Characteristic when using the flash memory programmer and the self-programming library provided by Renesas Electronics.

Note 3. This result is obtained from reliability testing.

Table 43.71 Code flash characteristics (2)

High-speed operating mode

Conditions: VCC = AVCC0 = 1.8 to 3.6 V

Parameter		Symbol	ICLK = 1 MHz			ICLK = 48 MHz			Unit
			Min	Typ	Max	Min	Typ	Max	
Programming time	8-byte	t_{P8}	—	128	1064	—	44.2	420	μs
Erasure time	2-KB	t_{E2K}	—	14.1	390	—	5.5	214	ms
Blank check time	8-byte	t_{BC8}	—	—	67.7	—	—	8.6	μs
	2-KB	t_{BC2K}	—	—	7538	—	—	272	μs
Erase suspended time		t_{SED}	—	—	33.4	—	—	10.7	μs
Forced stop time		t_{FD}	—	—	33.4	—	—	10.7	μs
Configuration Set time		t_{CFGS}	—	27	494	—	11	255	ms
Flash memory mode transition wait time 1		t_{DIS}	2	—	—	2	—	—	μs
Flash memory mode transition wait time 2		t_{MS}	15	—	—	15	—	—	μs

Note: Does not include the time until each operation of the flash memory is started after instructions are executed by software.

Note: The lower-limit frequency of FCLK is 1 MHz during programming or erasing the flash memory.

Note: The frequency accuracy of FCLK must be ± 1.0% during programming or erasing the flash memory. Confirm the frequency accuracy of the clock source.

Table 43.72 Code flash characteristics (3) (1 of 2)

Middle-speed operating mode

Conditions: VCC = AVCC0 = 1.6 to 3.6 V

Parameter		Symbol	ICLK = 1 MHz			ICLK = 8 MHz*1			Unit
			Min	Typ	Max	Min	Typ	Max	
Programming time	8-byte	t_{P8}	—	128	1064	—	50.6	468	μs
Erasure time	2-KB	t_{E2K}	—	14.1	390	—	6.32	231	ms

Table 43.72 Code flash characteristics (3) (2 of 2)

Middle-speed operating mode
Conditions: VCC = AVCC0 = 1.6 to 3.6 V

Parameter		Symbol	ICLK = 1 MHz			ICLK = 8 MHz*1			Unit
			Min	Typ	Max	Min	Typ	Max	
Blank check time	8-byte	t_{BC8}	—	—	67.7	—	—	13.3	μs
	2-KB	t_{BC2K}	—	—	7538	—	—	947	μs
Erase suspended time		t_{SED}	—	—	33.4	—	—	13.1	μs
Forced stop time		t_{FD}	—	—	33.4	—	—	13.1	μs
Configuration Set time		t_{CFGS}	—	27	494	—	12	277	ms
Flash memory mode transition wait time 1		t_{DIS}	2	—	—	2	—	—	μs
Flash memory mode transition wait time 2		t_{MS}	15	—	—	15	—	—	μs

Note: Does not include the time until each operation of the flash memory is started after instructions are executed by software.
Note: The lower-limit frequency of FCLK is 1 MHz during programming or erasing the flash memory.
Note: The frequency accuracy of FCLK must be ± 1.0% during programming or erasing the flash memory. Confirm the frequency accuracy of the clock source.
Note 1. When 1.8 V ≤ VCC = AVCC0 ≤ 3.6 V

Table 43.73 Code flash characteristics (4)

Low-speed operating mode
Conditions: VCC = AVCC0 = 1.6 to 3.6 V

Parameter		Symbol	ICLK = 1 MHz			Unit
			Min	Typ	Max	
Programming time	8-byte	t_{P8}	—	128	1064	μs
Erasure time	2-KB	t_{E2K}	—	14.1	390	ms
Blank check time	8-byte	t_{BC8}	—	—	67.7	μs
	2-KB	t_{BC2K}	—	—	7538	μs
Erase suspended time		t_{SED}	—	—	33.4	μs
Forced stop time		t_{FD}	—	—	33.4	μs
Configuration Set time		t_{CFGS}	—	27	494	ms
Flash memory mode transition wait time 1		t_{DIS}	2	—	—	μs
Flash memory mode transition wait time 2		t_{MS}	15	—	—	μs

Note: Does not include the time until each operation of the flash memory is started after instructions are executed by software.
Note: The lower-limit frequency of FCLK is 1 MHz during programming or erasing the flash memory.
Note: The frequency accuracy of FCLK must be ± 1.0% during programming or erasing the flash memory. Confirm the frequency accuracy of the clock source.

43.13.2 Data Flash Memory Characteristics

Table 43.74 Data flash characteristics (1)

Parameter		Symbol	Min	Typ	Max	Unit	Conditions
Reprogramming/erasure cycle*1		N_{DPEC}	100000	1000000	—	Times	—
Data hold time	After 10000 times of N_{DPEC}	t_{DDRP}	20*2 *3	—	—	Year	Ta = +85 °C
			10*2 *3	—	—		Ta = +105 °C
	After 100000 times of N_{DPEC}		5*2 *3	—	—		Ta = +105 °C
	After 1000000 times of N_{DPEC}		—	1*2 *3	—		Ta = +25 °C

Note 1. The reprogram/erase cycle is the number of erasure for each block. When the reprogram/erase cycle is n times (n = 100,000), erasing can be performed n times for each block. For instance, when 1-byte programming is performed 256 times for different

addresses in 256-byte blocks, and then the entire block is erased, the reprogram/erase cycle is counted as one. However, programming the same address for several times as one erasure is not enabled. (overwriting is prohibited.)

Note 2. Characteristics when using the flash memory programmer and the self-programming library provided by Renesas Electronics.

Note 3. This result is obtained from reliability testing.

Table 43.75 Data flash characteristics (2)

High-speed operating mode
Conditions: VCC = AVCC0 = 1.8 to 3.6 V

Parameter		Symbol	ICLK = 1 MHz			ICLK = 48 MHz			Unit
			Min	Typ	Max	Min	Typ	Max	
Programming time	1-byte	t_{DP1}	—	112	903	—	33.9	317	μs
Erasure time	256-byte	t_{DE256}	—	14.1	390	—	5.50	214	ms
Blank check time	1-byte	t_{DBC1}	—	—	67.7	—	—	8.6	μs
	256-byte	t_{DBC256}	—	—	7538	—	—	272	μs
Suspended time during erasing		t_{DSED}	—	—	33.4	—	—	10.7	μs
Forced stop time		t_{FD}	—	—	33.4	—	—	10.7	μs
Data flash STOP recovery time		t_{DSTOP}	250	—	—	250	—	—	ns

Note: Does not include the time until each operation of the flash memory is started after instructions are executed by software.

Note: The lower-limit frequency of FCLK is 1 MHz during programming or erasing the flash memory.

Note: The frequency accuracy of FCLK must be ± 1.0% during programming or erasing the flash memory. Confirm the frequency accuracy of the clock source.

Table 43.76 Data flash characteristics (3)

Middle-speed operating mode
Conditions: VCC = AVCC0 = 1.6 to 3.6 V

Parameter		Symbol	ICLK = 1 MHz			ICLK = 8 MHz*1			Unit
			Min	Typ	Max	Min	Typ	Max	
Programming time	1-byte	t_{DP1}	—	112	903	—	39.7	359	μs
Erasure time	256-byte	t_{DE256}	—	14.1	390	—	6.32	231	ms
Blank check time	1-byte	t_{DBC1}	—	—	67.7	—	—	13.3	μs
	256-byte	t_{DBC256}	—	—	7538	—	—	947	μs
Suspended time during erasing		t_{DSED}	—	—	33.4	—	—	13.1	μs
Forced stop time		t_{FD}	—	—	33.4	—	—	13.1	μs
Data flash STOP recovery time		t_{DSTOP}	250	—	—	250	—	—	ns

Note: Does not include the time until each operation of the flash memory is started after instructions are executed by software.

Note: The lower-limit frequency of FCLK is 1 MHz during programming or erasing the flash memory.

Note: The frequency accuracy of FCLK must be ± 1.0% during programming or erasing the flash memory. Confirm the frequency accuracy of the clock source.

Note 1. When 1.8 V ≤ VCC = AVCC0 ≤ 3.6 V

Table 43.77 Data flash characteristics (4) (1 of 2)

Low-speed operating mode
Conditions: VCC = AVCC0 = 1.6 to 3.6 V

Parameter		Symbol	ICLK = 1 MHz			Unit
			Min	Typ	Max	
Programming time	1-byte	t_{DP1}	—	112	903	μs
Erasure time	256-byte	t_{DE256}	—	14.1	390	ms
Blank check time	1-byte	t_{DBC1}	—	—	67.7	μs
	256-byte	t_{DBC256}	—	—	7538	μs
Suspended time during erasing		t_{DSED}	—	—	33.4	μs
Forced stop time		t_{FD}	—	—	33.4	μs

Table 43.77 Data flash characteristics (4) (2 of 2)

Low-speed operating mode
Conditions: VCC = AVCC0 = 1.6 to 3.6 V

Parameter	Symbol	ICLK = 1 MHz			Unit
		Min	Typ	Max	
Data flash STOP recovery time	t_{DSTOP}	250	—	—	ns

Note: Does not include the time until each operation of the flash memory is started after instructions are executed by software.
Note: The lower-limit frequency of FCLK is 1 MHz during programming or erasing the flash memory.
Note: The frequency accuracy of FCLK must be ± 1.0% during programming or erasing the flash memory. Confirm the frequency accuracy of the clock source.

43.13.3 Serial Wire Debug (SWD)

Table 43.78 SWD characteristics (1)

Conditions: VCC = AVCC0 = 2.4 to 5.5 V

Parameter	Symbol	Min	Typ	Max	Unit	Test conditions
SWCLK clock cycle time	$t_{SWCKcyc}$	50	—	—	ns	Figure 43.57
SWCLK clock high pulse width	t_{SWCKH}	15	—	—	ns	
SWCLK clock low pulse width	t_{SWCKL}	15	—	—	ns	
SWCLK clock rise time	t_{SWCKr}	—	—	5	ns	
SWCLK clock fall time	t_{SWCKf}	—	—	5	ns	
SWDIO setup time	t_{SWDS}	3	—	—	ns	Figure 43.58
SWDIO hold time	t_{SWDH}	13	—	—	ns	
SWDIO data delay time	t_{SWDD}	2	—	45	ns	

Table 43.79 SWD characteristics (2)

Conditions: VCC = AVCC0 = 1.6 to 2.4 V

Parameter	Symbol	Min	Typ	Max	Unit	Test conditions
SWCLK clock cycle time	$t_{SWCKcyc}$	250	—	—	ns	Figure 43.57
SWCLK clock high pulse width	t_{SWCKH}	120	—	—	ns	
SWCLK clock low pulse width	t_{SWCKL}	120	—	—	ns	
SWCLK clock rise time	t_{SWCKr}	—	—	5	ns	
SWCLK clock fall time	t_{SWCKf}	—	—	5	ns	
SWDIO setup time	t_{SWDS}	50	—	—	ns	Figure 43.58
SWDIO hold time	t_{SWDH}	50	—	—	ns	
SWDIO data delay time	t_{SWDD}	2	—	170	ns	

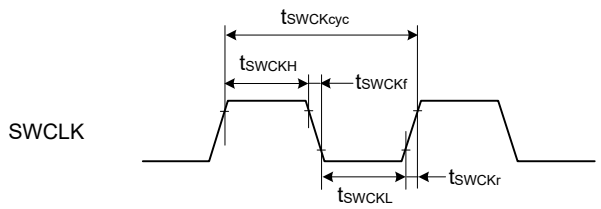

Figure 43.57 SWD SWCLK timing

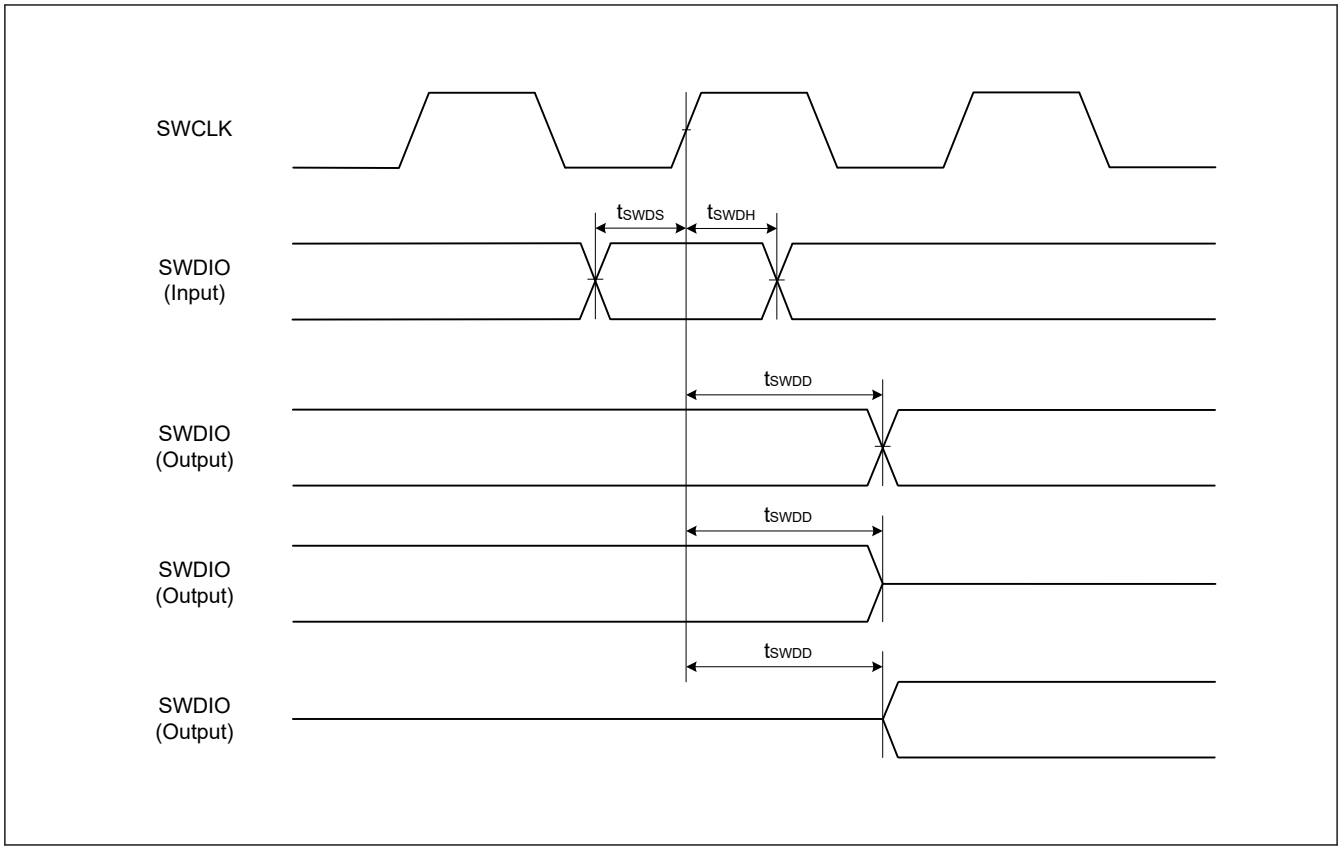

Figure 43.58 SWD input/output timing

Appendix 1. Port States in Each Processing Mode

Function	Pin function	Reset	Software Standby mode
Mode	MD	Pull-up	Keep-O
IRQ	IRQx	Hi-Z	Keep-O*1
AGT	AGTIOn	Hi-Z	AGTIOn input
	AGTOn/AGTOAn/AGTOBn	Hi-Z	AGTOn/AGTOAn/AGTOBn output
SCI	RXD0	Hi-Z	Keep-O*1
IIC	SCLn/SDAn	Hi-Z	Keep-O*1
UARTA	CLKAn	Hi-Z	CLKAn output
	RxDAn	Hi-Z	RxDAn input
RTC	RTCIC0	Hi-Z	RTCIC0 input
	RTCOUT	Hi-Z	RTCOUT output
CLKOUT	CLKOUT	Hi-Z	CLKOUT output
SLCDC	SEGx/COMx	Hi-Z	SEGx/COMx output
	VLx/CAPH/CAPL	Hi-Z	VLx/CAPH/CAPL input
Others	—	Hi-Z	Keep-O

Note: H: High-level
L: Low-level
Hi-Z: High-impedance
Keep-O: Output pins retain their previous values. Input pins go to high-impedance.

Note 1. Input is enabled if the pin is specified as the Software Standby canceling source while it is used as an external interrupt pin.

Appendix 2. Package Dimensions

Information on the latest version of the package dimensions or mountings is displayed in “Packages” on the Renesas Electronics Corporation website.

JEITA Package Code	RENESAS Code	Previous Code	MASS (Typ) [g]
P-LFQFP100-14x14-0.50	PLQP0100KB-B	—	0.6

Unit: mm

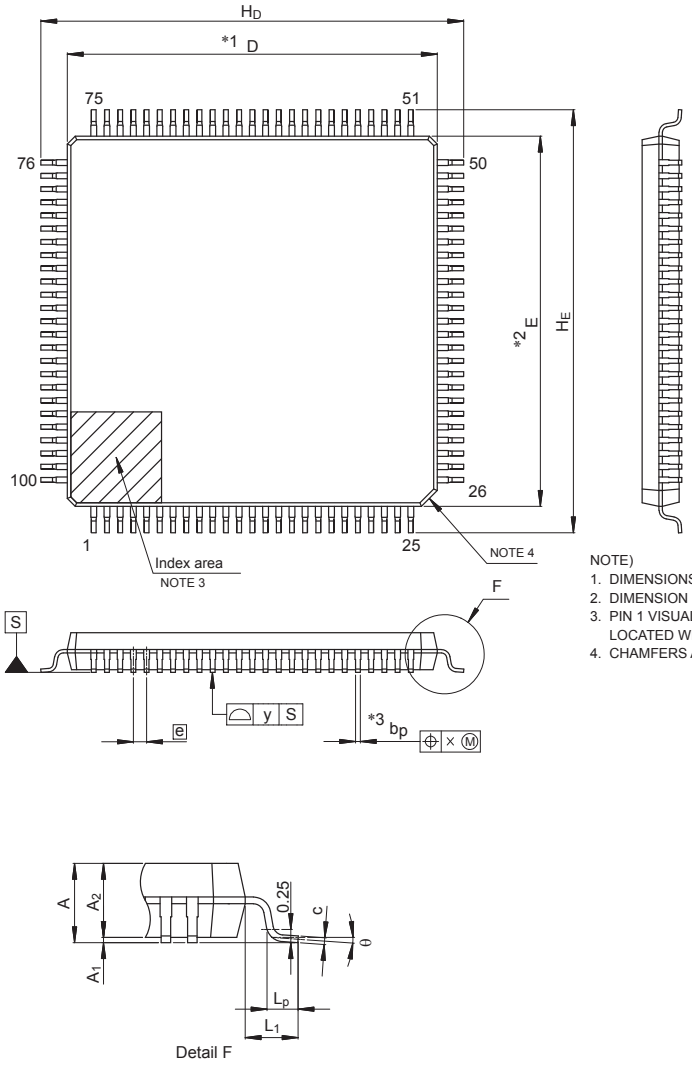

NOTE)
1. DIMENSIONS “*1” AND “*2” DO NOT INCLUDE MOLD FLASH.
2. DIMENSION “*3” DOES NOT INCLUDE TRIM OFFSET.
3. PIN 1 VISUAL INDEX FEATURE MAY VARY, BUT MUST BE LOCATED WITHIN THE HATCHED AREA.
4. CHAMFERS AT CORNERS ARE OPTIONAL, SIZE MAY VARY.

Reference Symbol	Dimensions in millimeters		
	Min	Nom	Max
D	13.9	14.0	14.1
E	13.9	14.0	14.1
A_2	—	1.4	—
H_D	15.8	16.0	16.2
H_E	15.8	16.0	16.2
A	—	—	1.7
A_1	0.05	—	0.15
b_p	0.15	0.20	0.27
c	0.09	—	0.20
θ	0°	3.5°	8°
e	—	0.5	—
x	—	—	0.08
y	—	—	0.08
L_p	0.45	0.6	0.75
L_1	—	1.0	—

© 2015 Renesas Electronics Corporation. All rights reserved.

Figure A2.1 LQFP 100-pin

JEITA Package Code	RENESAS Code	Previous Code	MASS (Typ) [g]
P-LFQFP64-10x10-0.50	PLQP0064KB-C	—	0.3

Unit: mm

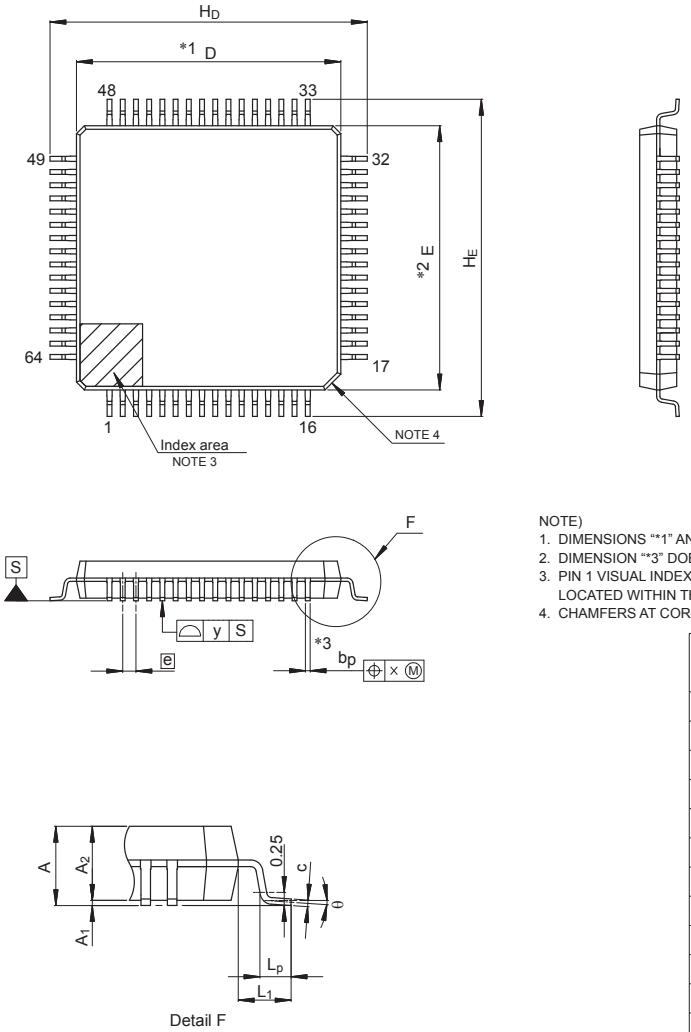

NOTE)
1. DIMENSIONS "*1" AND "*2" DO NOT INCLUDE MOLD FLASH.
2. DIMENSION "*3" DOES NOT INCLUDE TRIM OFFSET.
3. PIN 1 VISUAL INDEX FEATURE MAY VARY, BUT MUST BE LOCATED WITHIN THE HATCHED AREA.
4. CHAMFERS AT CORNERS ARE OPTIONAL, SIZE MAY VARY.

Reference Symbol	Dimensions in millimeters		
	Min	Nom	Max
D	9.9	10.0	10.1
E	9.9	10.0	10.1
A_2	—	1.4	—
H_D	11.8	12.0	12.2
H_E	11.8	12.0	12.2
A	—	—	1.7
A_1	0.05	—	0.15
b_p	0.15	0.20	0.27
c	0.09	—	0.20
θ	0°	3.5°	8°
e	—	0.5	—
x	—	—	0.08
y	—	—	0.08
L_p	0.45	0.6	0.75
L_1	—	1.0	—

© 2015 Renesas Electronics Corporation. All rights reserved.

Figure A2.2 LQFP 64-pin

Appendix 3. I/O Registers

This appendix describes I/O register address and access cycles by function.

3.1 Peripheral Base Addresses

This section provides the base addresses for peripherals described in this manual. Table A3.1 shows the name, description, and the base address of each peripheral.

Table A3.1 Peripheral base address (1 of 2)

Name	Description	Base address
RMPU	Master Memory Protection Unit	0x4000_0000
TZF	TrustZone Filter	0x4000_0E00
SRAM	Special Function Register	0x4000_2000
BUS	BUS Control	0x4000_3000
DMAC0	Direct memory access controller 0	0x4000_5000
DMAC1	Direct memory access controller 1	0x4000_5040
DMAC2	Direct memory access controller 2	0x4000_5080
DMAC3	Direct memory access controller 3	0x4000_50C0
DMAC4	Direct memory access controller 4	0x4000_5100
DMAC5	Direct memory access controller 5	0x4000_5140
DMAC6	Direct memory access controller 6	0x4000_5180
DMAC7	Direct memory access controller 7	0x4000_51C0
DMA	DMAC Module Activation	0x4000_5200
DTC	Data Transfer Controller	0x4000_5400
ICU	Interrupt Controller	0x4000_6000
CACHE	CACHE	0x4000_7000
CPSCU	CPU System Security Control Unit	0x4000_8000
DBG	Debug Function	0x4001_B000
FCACHE	Flash Cache	0x4001_C100
SYSC	System Control	0x4001_E000
PORT0	Port 0 Control Registers	0x4001_F000
PORT1	Port 1 Control Registers	0x4001_F020
PORT2	Port 2 Control Registers	0x4001_F040
PORT3	Port 3 Control Registers	0x4001_F060
PORT4	Port 4 Control Registers	0x4001_F080
PORT5	Port 5 Control Registers	0x4001_F0A0
PORT6	Port 6 Control Registers	0x4001_F0C0
PORT7	Port 7 Control Registers	0x4001_F0E0
PORT8	Port 8 Control Registers	0x4001_F100
PFS	Pmn Pin Function Control Register	0x4001_F800
ELC	Event Link Controller	0x4008_2000
RTC	Realtime Clock	0x4008_3000
IWDT	Independent Watchdog Timer	0x4008_3200
WDT	Watchdog Timer	0x4008_3400
CAC	Clock Frequency Accuracy Measurement Circuit	0x4008_3600

Table A3.1 Peripheral base address (2 of 2)

Name	Description	Base address
MSTP	Module Stop Control A, B, C, D, E	0x4008_4000
POEG	Port Output Enable Module for GPT	0x4008_A000
UARTA	Serial Interface UARTA	0x4009_7000
IIC0	Inter-Integrated Circuit 0	0x4009_F000
IIC1	Inter-Integrated Circuit 1	0x4009_F100
CANFD	CANFD Module	0x400B_0000
SLCDC	Segment LCD Controller/Driver	0x400D_4000
PSCU	Peripheral Security Control Unit	0x400E_0000
AGT0	Low Power Asynchronous General purpose Timer 0	0x400E_8000
AGT1	Low Power Asynchronous General purpose Timer 1	0x400E_8100
CRC	CRC Calculator	0x4010_8000
DOC	Data Operation Circuit	0x4010_9000
SCI0	Serial Communication Interface 0	0x4011_8000
SCI1	Serial Communication Interface 1	0x4011_8100
SCI3	Serial Communication Interface 3	0x4011_8300
SCI4	Serial Communication Interface 4	0x4011_8400
SCI5	Serial Communication Interface 5	0x4011_8500
SCI9	Serial Communication Interface 9	0x4011_8900
SPI0	Serial Peripheral Interface 0	0x4011_A000
SPI1	Serial Peripheral Interface 1	0x4011_A100
SPI2	Serial Peripheral Interface 2	0x4011_A200
ECCMB	Error correction circuit for MBRAM	0x4012_F000
GPT320	General PWM 32-Bit Timer 0	0x4016_9000
GPT321	General PWM 32-Bit Timer 1	0x4016_9100
GPT162	General PWM 16-Bit Timer 2	0x4016_9200
GPT163	General PWM 16-Bit Timer 3	0x4016_9300
GPT164	General PWM 16-Bit Timer 4	0x4016_9400
GPT165	General PWM 16-Bit Timer 5	0x4016_9500
GPT_OPS	Output Phase Switching Controller	0x4016_9A00
ADC120	12bit A/D Converter 0	0x4017_0000
FLCN	Flash I/O Registers	0x407E_C000
FACI	Flash Application Command Interface	0x407F_E000
QSPI	Quad-SPI	0x6400_0000
CPU_OCD	On-Chip Debug	0x8000_0000

Note: Name = Peripheral name
Description = Peripheral functionality
Base address = Lowest reserved address or address used by the peripheral

3.2 Access Cycles

This section provides access cycle information for the I/O registers described in this manual.

- Registers are grouped by associated module.
- The number of access cycles indicates the number of cycles based on the specified reference clock.

- In the internal I/O area, reserved addresses that are not allocated to registers must not be accessed, otherwise operations cannot be guaranteed.
- The number of I/O access cycles depends on bus cycles of the internal peripheral bus, divided clock synchronization cycles, and wait cycles of each module. Divided clock synchronization cycles differ depending on the frequency ratio between ICLK and PCLK.
- When the frequency of ICLK is equal to that of PCLK, the number of divided clock synchronization cycles is always constant.
- When the frequency of ICLK is greater than that of PCLK, at least 1 PCLK cycle is added to the number of divided clock synchronization cycles.
- The number of write access cycles indicates the number of cycles obtained by non-bufferable write access.

Note: This applies to the number of cycles when access from the CPU does not conflict with the instruction fetching to the external memory or bus access from other bus masters such as DTC or DMAC.

Table A3.2 Access cycles (1 of 3)

Peripherals	Address		Number of access cycles					
			ICLK = PCLK		ICLK > PCLK*1		Cycle Unit	Related function
	From	To	Read	Write	Read	Write		
RMPU, TZF, SRAM, BUS, DMACn, DMA, DTC, ICU	0x4000_0000	0x4000_6FFF	4	3	4	3	ICLK	Renesas Memory Protection Unit, TrustZone Filter, SRAM Control, BUS Control, Direct memory access controller n, DMAC Module Activation, DTC Control Register, Interrupt Controller
CACHE	0x4000_7000	0x4000_7FFF	4	5	4	5	ICLK	CACHE
CPSCU, DBG, FCACHE	0x4000_8000	0x4001_CFFF	4	3	4	3	ICLK	CPU System Security Control Unit, Debug Function, Flash Cache
SYSC	0x4001_E000	0x4001_E5FF	6	5	6	5	ICLK	System Control
PORTn, PFS	0x4001_F000	0x4001_FFFF	5*2	4	5*2	4	ICLK	Port n Control Registers, Pmn Pin Function Control Register
ELC, RTC, IWDT, WDT, CAC, MSTP, POEG	0x4008_2000	0x4008_AFFF	5	4	2 to 5	2 to 4	PCLKB	Event Link Controller, Realtime Clock, Independent Watchdog Timer, Watchdog Timer, Clock Frequency Accuracy Measurement Circuit, Module Stop Control, Port Output Enable Module for GPT
UARTA	0x4009_7000	0x4009_7FFF	4	3	1 to 4	1 to 3	PCLKB	Serial Interface UARTA
IICn, IIC0WU, CANFD	0x4009_D000	0x400D_0FFF	5	4	2 to 5	2 to 4	PCLKB	Serial Sound Interface Enhanced, Inter-Integrated Circuit n, Inter-Integrated Circuit 0 Wake-up Unit, CANFD Module
SLCDC	0x400D_4000	0x400D_4FFF	4	3	1 to 4	1 to 3	PCLKB	Segment LCD Controller/Driver
PSCU	0x400E_0000	0x400E_0FFF	5	4	2 to 5	2 to 4	PCLKB	Peripheral Security Control Unit
AGTn	0x400E_8000	0x400E_8FFF	7	4	4 to 7	2 to 4	PCLKB	Low Power Asynchronous General purpose Timer n

Table A3.2 Access cycles (2 of 3)

Peripherals	Address		Number of access cycles					
			ICLK = PCLK		ICLK > PCLK*1		Cycle Unit	Related function
	From	To	Read	Write	Read	Write		
CRC, DOC	0x4010_8000	0x4010_9FFF	5	4	2 to 5	2 to 4	PCLKA	CRC Calculator, Data Operation Circuit
SCIn	0x4011_8000	0x4011_8FFF	5*3	4*3	2 to 5*3	2 to 4*3	PCLKA	Serial Communication Interface n
SPIn	0x4011_A000	0x4011_AFFF	5*4	4*4	2 to 5*4	2 to 4*4	PCLKA	Serial Peripheral Interface n
ECCMB	0x4011_F000	0x4012_FFFF	5	4	2 to 5	2 to 4	PCLKA	Error correction circuit for MBRAM
GPT32n, GPT16n, GPT_OPS	0x4016_9000	0x4016_9FFF	7	4	4 to 7	2 to 4	PCLKA	General PWM 32-Bit Timer n, General PWM 16-Bit Timer n, Output Phase Switching Controller
ADC120	0x4017_0000	0x4017_1FFF	5	4	2 to 5	2 to 4	PCLKA	12bit A/D Converter 0
QSPI	0x6400_0000	0x6400_000F	5	14 to *5	2 to 5	14 to *5	PCLKA	Quad-SPI
QSPI	0x6400_0010	0x6400_0013	25 to *5	6 to *5	25 to *5	5 to *5	PCLKA	Quad-SPI
QSPI	0x6400_0014	0x6400_0037	5	14 to *5	2 to 5	14 to *5	PCLKA	Quad-SPI
QSPI	0x6400_0804	0x6400_0807	4	3	1 to 4	1 to 3	PCLKA	Quad-SPI

Table A3.2 Access cycles (3 of 3)

Peripherals	Address		Number of access cycles					
			ICLK = FCLK		ICLK > FCLK*1		Cycle Unit	Related function
	From	To	Read	Write	Read	Write		
FLCN, FACI	0x407E_C000	0x407F_EFFF	5	4	3 to 5	2 to 4	FCLK	Flash I/O Registers, Flash Application Command Interface

Note 1. If the number of PCLK or FCLK cycles is non-integer (for example 1.5), the minimum value is without the decimal point, and the maximum value is rounded up to the decimal point. For example, 1.5 to 2. 5 is 1 to 3.

Note 2. The access cycles of the PRCNT2 and PFS registers depend on PRWCNTR.
For details, see section 18, I/O Ports.

Note 3. When accessing a 16-bit register (FTDRHL, FRDRHL, FCR, FDR, LSR, and CDR), access is 2 cycles more than the value shown in Table A3.2. When accessing an 8-bit register (including FTDRH, FTDRL, FRDRH, and FRDRL), the access cycles are as shown in Table A3.2.

Note 4. When accessing the 32-bit register (SPDR), access is 2 cycles more than the value in Table A3.2. When accessing an 8-bit or 16-bit register (SPDR_HA), the access cycles are as shown in Table A3.2.

Note 5. The access cycles depend on the QSPI bus cycles.

Appendix 4. Peripheral Variant

Table A4.1 shows the correspondence between the module name used in this manual and the peripheral variant.

Table A4.1 Association between module name and peripheral variant

Module name	Peripheral variant
AGTW	AGTW_B
DOC	DOC_B

Revision History

Revision 1.00 — May 28, 2025

Initial release

Revision 1.10 — Jul 4, 2025

9. Clock Frequency Accuracy Measurement Circuit:
- Updated Figure 9.1 CAC block diagram.

19. Port Output Enable for GPT:
- Added note in 19.3 Output-Disable Control Operation.

20. General PWM Timer:
- Updated 20.2.12 GTCR : General PWM Timer Control Register.
- Updated 20.3.4 Automatic Dead Time Setting Function.

21. Low Power Asynchronous General Purpose Timer:
- Updated Table 21.1 AGT specifications.

25. Serial Communications Interface:
- Added note in 25.2.61 SCIMSKEN : SCI5 TXD Output Mask Enable Register.

36. Temperature Sensor:
- Updated 36.3.1 Preparation for Using the Temperature Sensor.

43. Electrical Characteristics:
- Updated Table 43.20 Thermal resistance
- Added 43.2.8.1 Calculation Guide of ICCmax.
- Updated Table 43.54 TSN characteristics.

RA4C1 Group User's Manual: Hardware

Publication Date: Rev.1.10 Jul 4, 2025
Rev.1.00 May 28, 2025

Published by: Renesas Electronics Corporation

32-Bit MCU
RA4C1 Group

Renesas Electronics Corporation

R01UH1137EJ0110