RL78/G13

Wi-Fi Smart Power Strip

R01AN4611EC0100
Rev.1.00
Mar. 31, 2019

Introduction

This document describes a Renesas microcontroller RL78/G13 application for a Wi-Fi smart power strip.

Target Device

RL78/G13

When applying the sample program covered in this document to another microcomputer, modify the program according to the specifications for the target microcomputer and conduct an extensive evaluation of the modified program.

Contents

1. Description 3
1.1 Abstract 3
1.2 Specifications and Main Technical Parameters 3
2. RL78/G13 Microcontroller 4
2.1 RL78/G13 Block Diagram 4
2.2 Key Features 5
2.3 Pin Configuration 6
3. System Outline 7
3.1 Principle Introduction 7
3.2 Peripheral Functions to be Used 8
3.3 Pins to be Used 9
3.4 What You Need to Get Started 10
3.5 Operating Instructions 13
4. Hardware 15
4.1 Power Supply Circuit 16
4.2 Energy Metering Circuit 17
4.3 Power Control Circuit 18
5. Software 19
5.1 Integrated Development Environment 19
5.2 Option Byte 19
5.3 Operation Outline 20
5.4 Flow Chart 22
5.4.1 Main Processing 22
5.4.2 UART Receive Interrupt Sub-Routine 25
6. Sample Code 27
7. Reference Documents 27

1. Description

1.1 Abstract

A Wi-Fi smart power strip is a popular household appliance. It is widely used in the intelligent linkage control and power saving of connecting devices, such as mainframe computer with peripheral equipment, television with set-top box and router, etc. This application note provides a smart power strip application based on the Renesas RL78/G13. The main product characteristic for this device is that power information can be monitored remotely, and the switches of each outlet can be controlled remotely. The intelligent linkage and power saving are realized in this fashion.

1.2 Specifications and Main Technical Parameters

Technical Parameters

- Voltage rating: 220 V AC
- Current rating: 10 A
- Power rating: < 2500 W
- Outlet power supply ON-OFF control method: Relay method

Specifications

- Intelligent linkage control and power saving: Work with Renesas IoT Sandbox to control each of the outlets individually ON/OFF via cloud control. Can be turned ON/OFF based on the setting on mobile phone app for energy saving.
- Operating temperature: -10°C ~ 40°C
- Operating humidity: 30% RH ~ 95% RH

2. RL78/G13 Microcontroller

2.1 RL78/G13 Block Diagram

Figure 2.1 shows the block diagram of RL78/G13 (20-pin products).

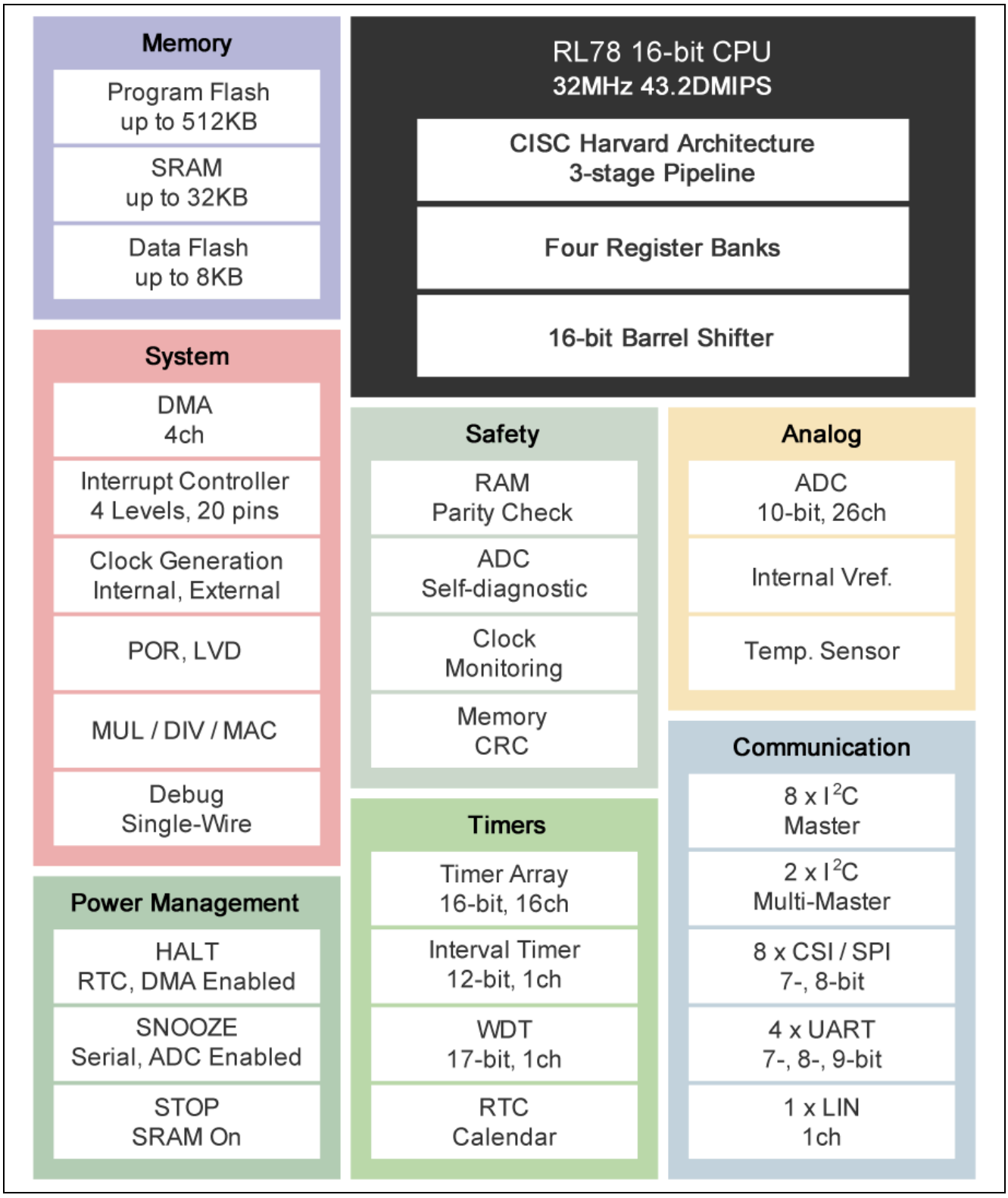

Figure 2.1 RL78/G13 (20-pin Products) Block Diagram

2.2 Key Features

- Minimum instruction execution time: Can be changed from high speed (0.03125 µs @ 32 MHz operation with high-speed on-chip oscillator) to ultra-low speed (1.0 µs @ 32.768 kHz operation)
- General-purpose registers: (8-bit register × 8) x 4 banks
- ROM: 16 to 512 KB, RAM: 2 to 32 KB
- Selectable high-speed on-chip oscillator clock: 32/24/16/12/8/6/4/3/2/1 MHz (TYP.)
- Prohibition of block erase and rewriting (security function)
- On-chip debug function
- Self-programming (with boot swap function/flash shield window function)
- Back ground operation (BGO): Instructions can be executed from the program memory while rewriting the data flash memory
- On-chip power-on-reset (POR) circuit
- On-chip voltage detector (LVD) (Select interrupt and reset from 14 levels)
- On-chip watchdog timer (operable with the dedicated low-speed on-chip oscillator)
- On-chip key interrupt function: 6 key interrupt input pins
- On-chip clock output/buzzer output controller
- On-chip BCD (binary-coded decimal) correction circuit
- DMA (Direct Memory Access) controller
- Multiplier and divider/multiply-accumulator
- I/O port: 16 to 120
- Timer
  16-bit timer: 8 to 16 channels
  12-bit interval timer: 1 channel
  Real-time clock: 1 channel (calendar for 99 years, alarm function, and clock correction function)
  Watchdog timer: 1 channel (operable with the dedicated low-speed on-chip oscillator)
- Serial interface
  CSI: 2 to 8 channels
  UART/UART (LIN-bus supported): 2 to 4 channels
  I^2C/Simplified I^2C communication: 2 to 8 channels
- 8/10-bit resolution A/D converter: 4 channels
- Standby function: HALT mode
- Power supply voltage: V_{DD} = 2.0 to 5.5 V
- Operating ambient temperature: T_A = -40 to +85°C

RL78/G13 is widely used in small consumer electronics for industry, office, home appliance, healthcare, security and city applications.

2.3 Pin Configuration

Figure 2.2 shows the pin configuration of RL78/G13 (20-pin products).

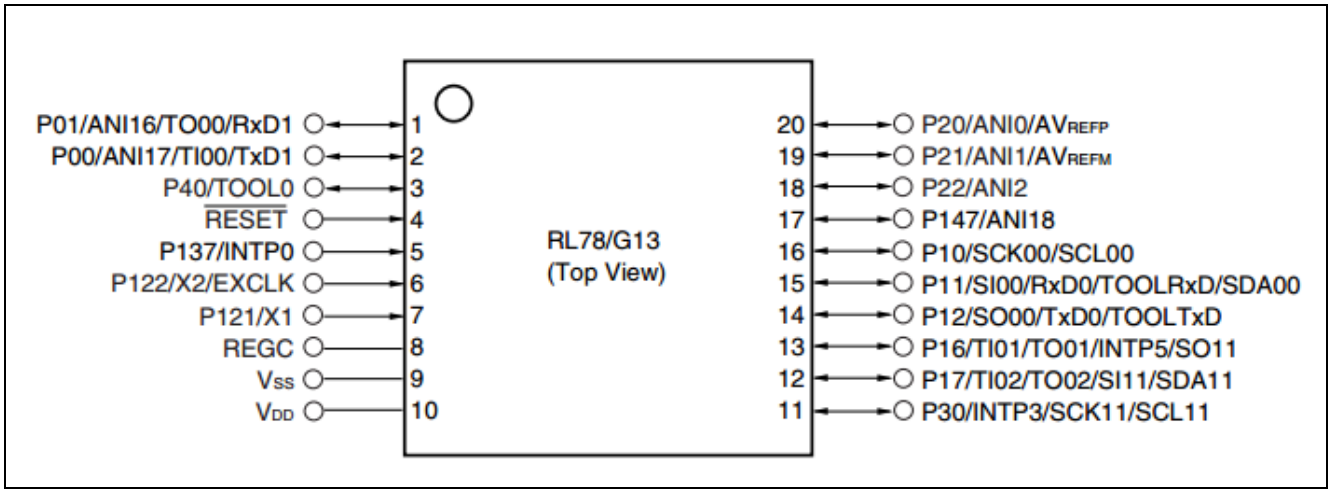

Figure 2.2 RL78/G13 (20-pin Products) Pin Configuration

3. System Outline

3.1 Principle Introduction

After system initialization is completed, the MCU connects to the cloud, via the Wi-Fi module, to transmit and receive data. Meanwhile, the energy metering circuit detects the energy consumption of the device connected to the smart power strip through a single-phase energy metering chip every 10 seconds. After the detection, the MCU transmits the detection results data (including power, voltage, current data) to the cloud through the Wi-Fi module.

Figure 3.1 shows the system block diagram.

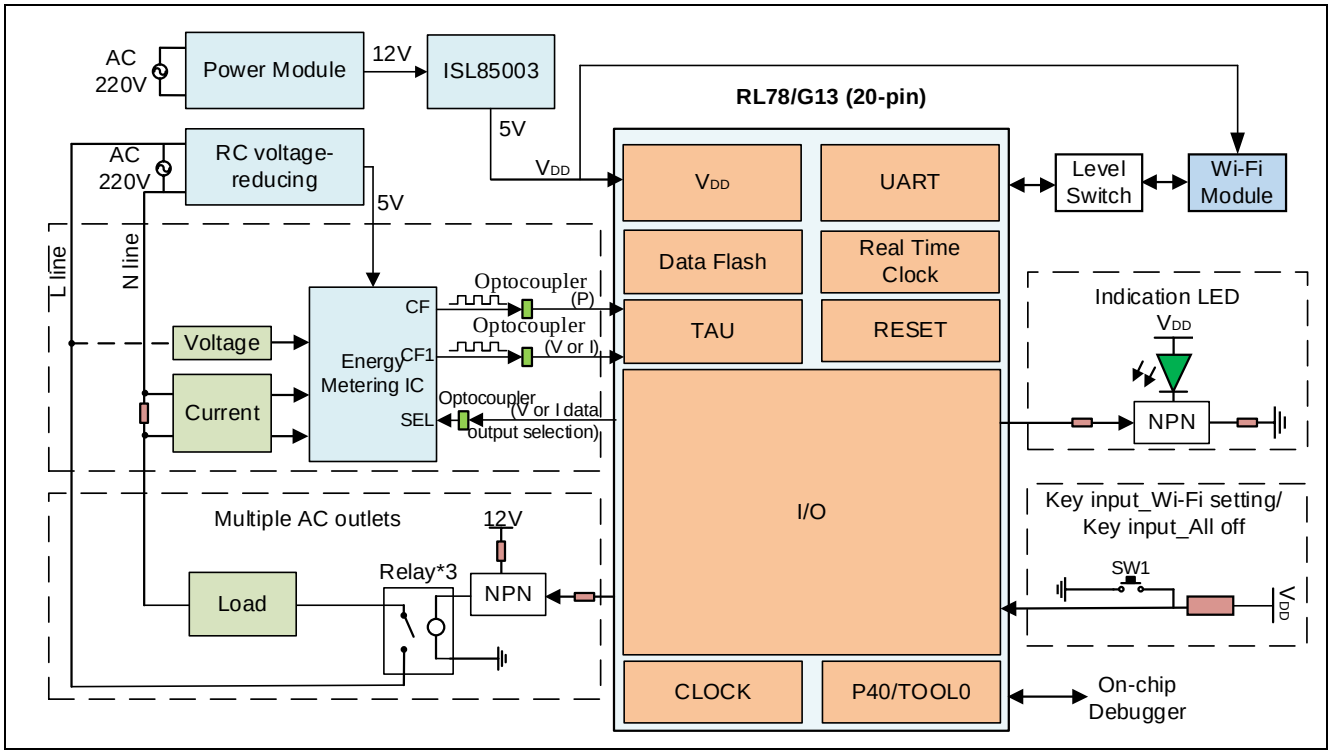

Figure 3.1 System Block Diagram

3.2 Peripheral Functions to be Used

Table 3.1 lists the peripheral functions to be used and their usage.

Table 3.1 Peripheral Functions to be Used

Peripheral Function	Usage
Channel 1 of TAU0	Input pulse interval measurement mode Measure the power pulse output from the energy metering IC
Channel 2 of TAU0	Input pulse interval measurement mode Measure the voltage pulse and current output from the energy metering IC
Channel 3 of TAU0	Interval timer mode Measure the keypress duration
Channel 4 of TAU0	Interval timer mode Energy measurement Timer
Channel 5 of TAU0	Interval timer mode Generate a 200msdelay
Channel 6 of TAU0	Interval timer mode Detection timeout
UART0	Communicate with the WIFI module
INTP0	Receive key interrupts

3.3 Pins to be Used

Table 3.2 lists the pins to be used and their function.

Table 3.2 Pins to be Used

Pin Name	Description
P40/TOOL0	On-chip debug
P125/RESET	Hardware reset
P137/INTP0	Set Wi-Fi or control the ON/OFF of the outlets
V_{SS}	Ground
V_{DD}	Power supply voltage
P30	Configure the active output pins for the energy metering IC to select voltage pulse measurement or current pulse measurement
P17/TI02	Measure the voltage pulse or current pulse output from the energy metering IC
P16/TI01	Measure the power pulse output from the energy metering IC
P12/TXD0	UART0 transmission
P11/RXD0	UART0 reception
P10	Control the Wi-Fi reset
P20~P22	Control the ON/OFF of the outlets
P00, P01, P147	Outlet indicators

3.4 What You Need to Get Started

- Renesas RL78/G13 Wi-Fi smart power strip demo board
- Wi-Fi Internet access (2.4 GHz only)
- ESP8266 WeMos D1 mini board, v.2.3.0
  https://wiki.wemos.cc/products:d1:d1_mini
- Windows PC
- 2x Micro USB data cable
- WeMos ESP8266 module bin file: wifiesp8266_sps_iot_sandbox.ino.d1_mini.bin
- esptool.exe flashing tool
  https://github.com/Medium-One/m1_cloud_io/blob/master/esptool.exe
- RL78/G13 mot file: rl78g13_smart_power_strip.mot

STEP 1. Program RL78/G13 mot file
Connect the RL78 to the Windows PC via a Renesas emulator (e.g., E1 emulator) and open Renesas Flash Programmer (https://www2.renesas.cn/products/software-tools/tools/programmer/renesas-flash-programmer-programming-gui.html) .

Download rl78g13_ smart_power_strip.mot file (in the folder of "X:\..\Source Code\Hex file") according to the instruction of Renesas Flash Programmer.

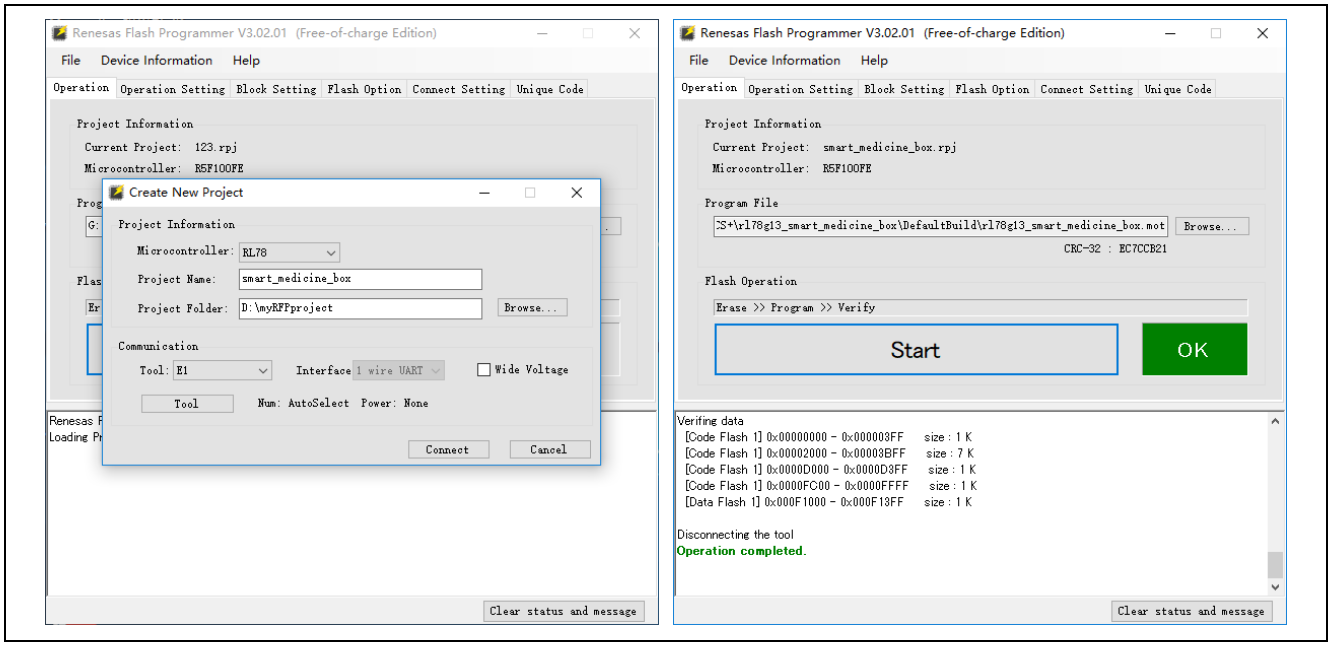

Figure 3.2 Program MCU mot File

If the flash is programmed with OK, the RL78/G13 demo board is ready.

STEP 2. Flash the WeMos ESP8266 module

Connect (via 2x Micro USB data cable) the ESP8266 board to the Windows PC. Install Windows USB driver (https://wiki.wemos.cc/downloads) for the WeMos board, which will allow the Windows PC to communicate with and flash the WeMos board.

Open the device manager. Under the 'Ports' dropdown, the USB Serial Port# (COM#) of WeMos ESP8266 module can be got.

Open the Command Prompt and change directories into the folder ("X:\..\Source Code\WiFi Module\esptool flashing tool") where the files of main_smb_iot_sandbox.ino.d1.bin and esptool.exe tool are in.

In the command window, copy and paste the following command and replace COM8 with your COM# then press "Enter".

```
esptool.exe -vv -cd nodemcu -cb 921600 -cp COM8 -ca 0x00000 -cf
wifiesp8266_sps_iot_sandbox.ino.d1.bin
```

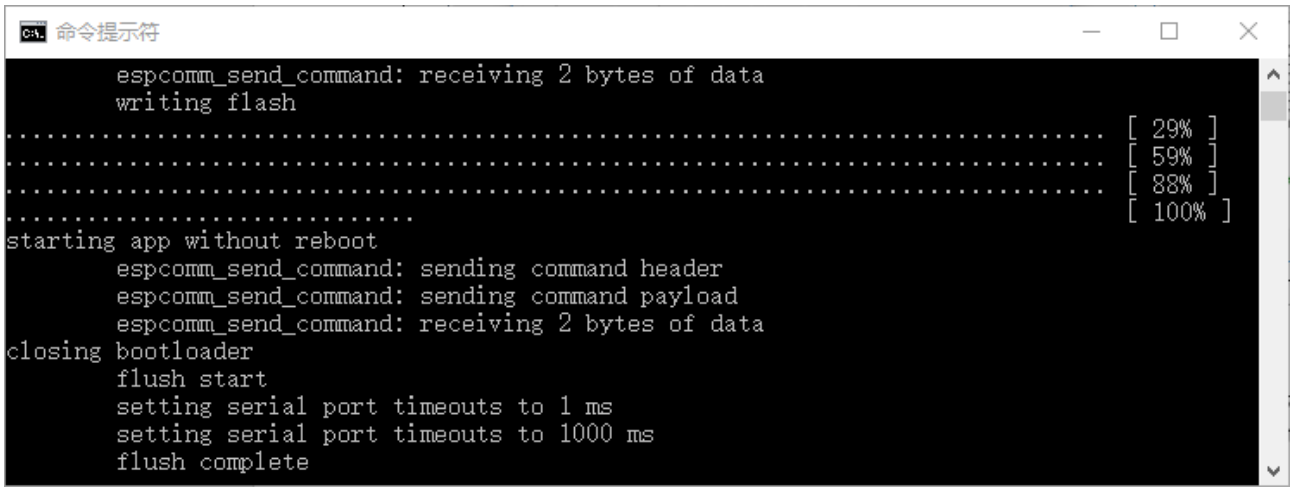

Figure 3.3 Flash WeMos ESP8266 Module

When the flash is programmed 100%, the WeMos ESP8266 module is ready.

STEP 3. Connect RL78/G13 Wi-Fi smart power strip demo board and the WeMos D1 mini board

Connect the RL78/G13 board with the WeMos ESP8266 module. The pins connection is shown in Table 3.3.

Table 3.3 Pins Connection

Pins on RL78/G13 MCU Board (CON5)		Pins on WeMos D1 Mini Board	
Pin No. on CON5	**RL78/G13 Pin**	**ESP8266 Pin**	**Function**
1	V_{DD}	3V3	3.3 V
2	P11/RXD0	D7	GPIO13 (software TXD)
3	P12/TXD0	D6	GPIO12 (software RXD)
4	P51	RST	Reset
5	V_{SS}	G	GND

STEP 4. Install mobile app

Open the installation file of Wi-Fi Smart Power Strip.apk and install the app in the android mobile.

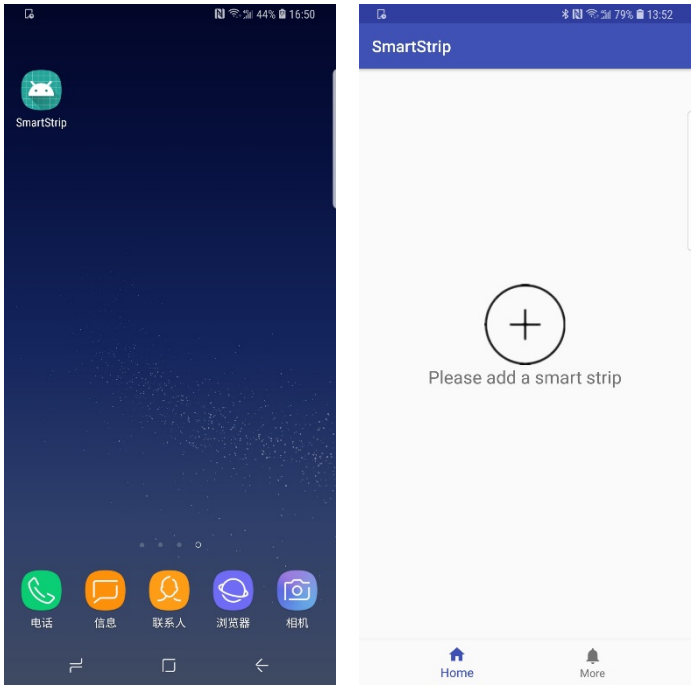

Figure 3.4 Installation of the Mobile App

About the MQTT information for each demo

In the sample program, some smart power strip device IDs, MQTT ID and its password have been registered in advance. Please choose one number by the selection in the spsinfo.h file, which is shown in Figure 3.5.

If users want to change the smart power strip device ID, please rebuild the project in CS+ or e2studio to generate mot file again. Then implement STEP 1 and STEP 2 again to program the MCU flash and WeMos module flash one more time.

```
/*****************************************************************************
* File Name     : spsinfo.h
* Version       : V1.00.00
* Device(s)     : R5F1006E
* Tool-Chain    : CCRL
* Description   : This file declares smart power strip device ID and MQTT information.
* Creation Date: 2018/12/31
*****************************************************************************

#define SPS001
//#define SPS002
//#define SPS003
//#define SPS004
//#define SPS005
//#define SPS006
//#define SPS007
//#define SPS008
//#define SPS009
//#define SPS010
```

Figure 3.5 Smart Power Strip Device ID and MQTT Information Selection

3.5 Operating Instructions

(1) Power on the Wi-Fi smart power strip, the RL78/G13 MCU will enter the initialization operation. The WeMos ESP8266 module will be reset.

(2) The WeMos ESP8266 module should be configured first. The LED on the Wi-Fi module will blink at different timer intervals to indicate the different working status, which is shown in Table 3.4.

Table 3.4 Wi-Fi Module Working Status Indication

Wi-Fi Module LED Blinking Interval	Wi-Fi Module Working Status Description
4 s	Wi-Fi connection failed.
1 s	Wi-Fi connection successful. MQTT connection successful.
500 ms	Wi-Fi connection successful. MQTT connection failed.
100 ms	In Wi-Fi SSID and password setting processing.

If SW1 is pressed for over 1 second, the RL78/G13 will send the Wi-Fi set command to the WeMos module, then the WeMos module enters the Wi-Fi setting mode. The Wi-Fi SSID and password can be set through the mobile app. The smart power strip device ID, MQTT user name and its password will be sent to the mobile app as well.

Press SW1 on the smart power strip demo board for over 1 second to make the WeMos module enter the Wi-Fi setting mode. Open the mobile app and tap the “+” on the home page. The mobile app can find the WLAN automatically. Enter the WLAN password and tap the "CONFIRM" button. This setting procedure is shown in Figure 3.6.

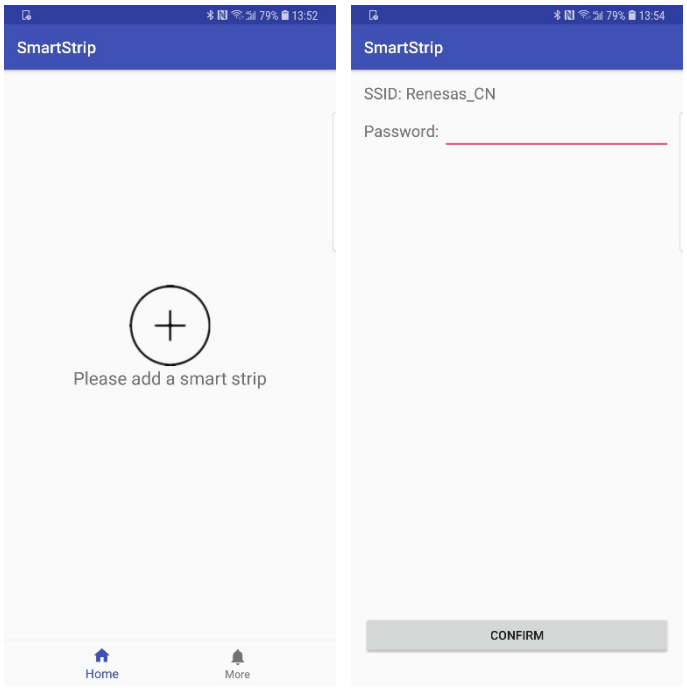

Figure 3.6 Config the Smart Power Strip Wi-Fi

When the WeMos module is connected to the broker (Renesas IoT Sandbox) successfully, the LED on the Wi-Fi module will blink at a 1 second interval. If not, please delete “Wi-Fi smart power strip” on the app and add it again.

(3) MQTT protocol is used for the communication among the Wi-Fi smart power strip, the Renesas IoT Sandbox (the cloud) and the mobile phone app. The RL78/G13 MCU saves the detection result including power value, voltage value and current value of the smart power strip every 10 seconds. An instruction will be sent to the Renesas IoT Sandbox through MQTT by clicking the "REFRESH" button on the mobile app, and the Renesas IoT Sandbox forwards the instruction to the MCU. After receiving the instruction, the MCU sends the saved data to the Renesas IoT Sandbox through Wi-Fi module, and the Renesas IoT Sandbox feeds the data back to the app in real-time. The mobile app will subscribe the message of each value through MQTT with the cloud in real-time.

The 3 outlets can be controlled individually on the home page of the mobile app. When set the ON/OFF status on the mobile phone, a message will be sent to the cloud. If the command of controlling the outlets is received, the RL78/G13 will turn ON/OFF the outlets according to the command and upload the outlets status to the mobile app via MQTT through the WeMos module.

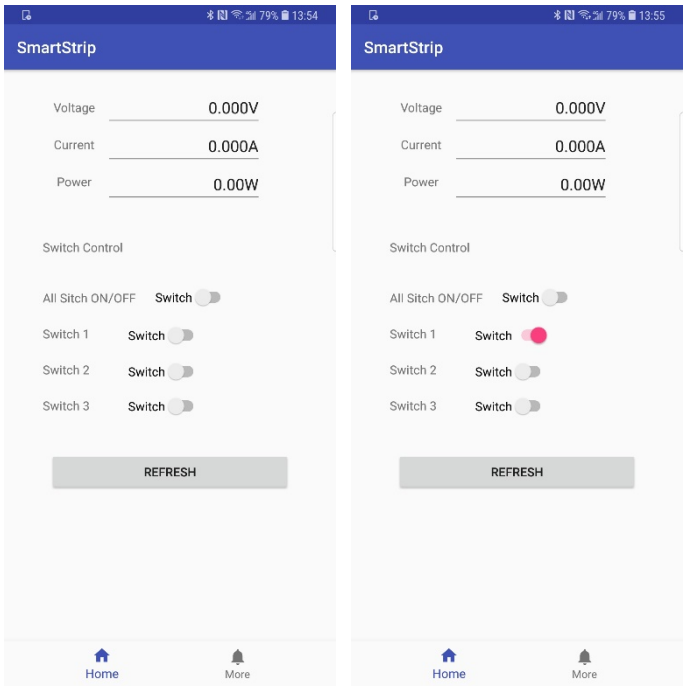

Figure 3.7 Outlets ON/OFF Control

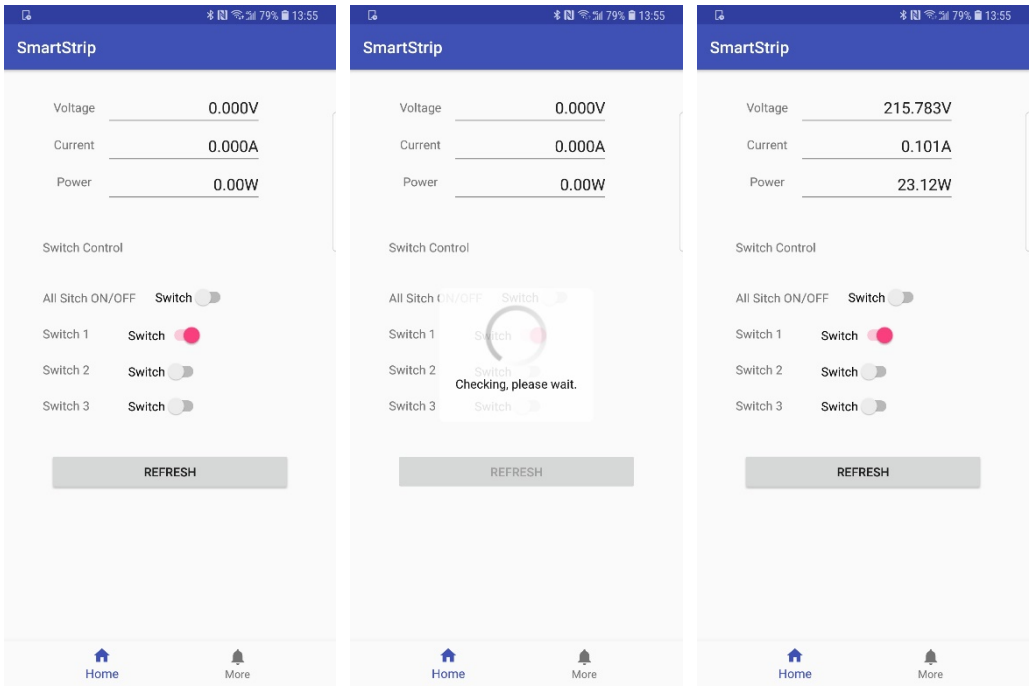

Figure 3.8 Power Value Check and Display

4. Hardware

An AC-DC power module is used to transform 220 V AC to 12 V DC. And then the 12 V DC voltage is supplied to 3 relays. The ISL85003 buck circuit reduces the 12 V DC voltage to 5 V DC voltage for the MCU and the Wi-Fi module. There are 3 Omron single relays, each of which controls an outlet. The energy metering chip detects the active power of the device plugged into the outlet and sends the energy signals to the MCU with pulses by an optocoupler. The MCU receives the pulses and calculates the value of the power, voltage and current. And then these values will be sent to the cloud through the Wi-Fi module.

Figure 4.1 shows the board picture.

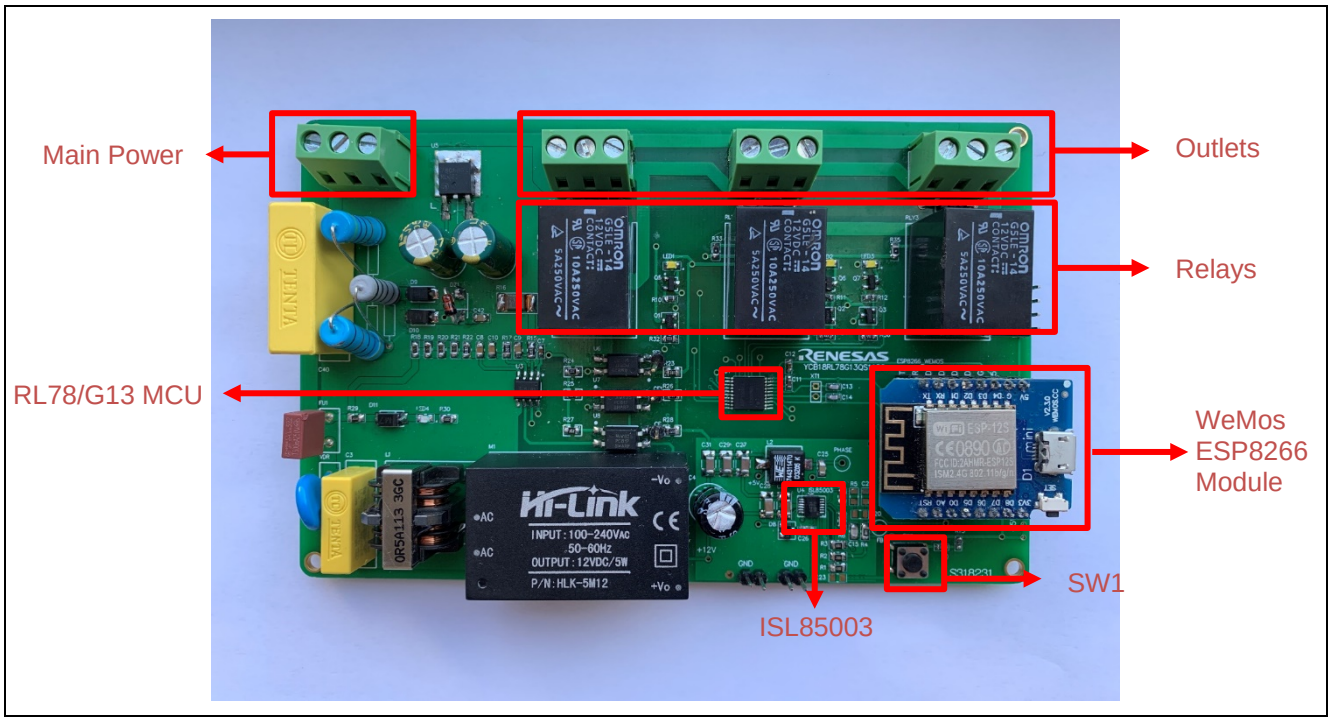

Figure 4.1 Board Picture

4.1 Power Supply Circuit

Figure 4.2 shows the schematics of the power supply circuit.

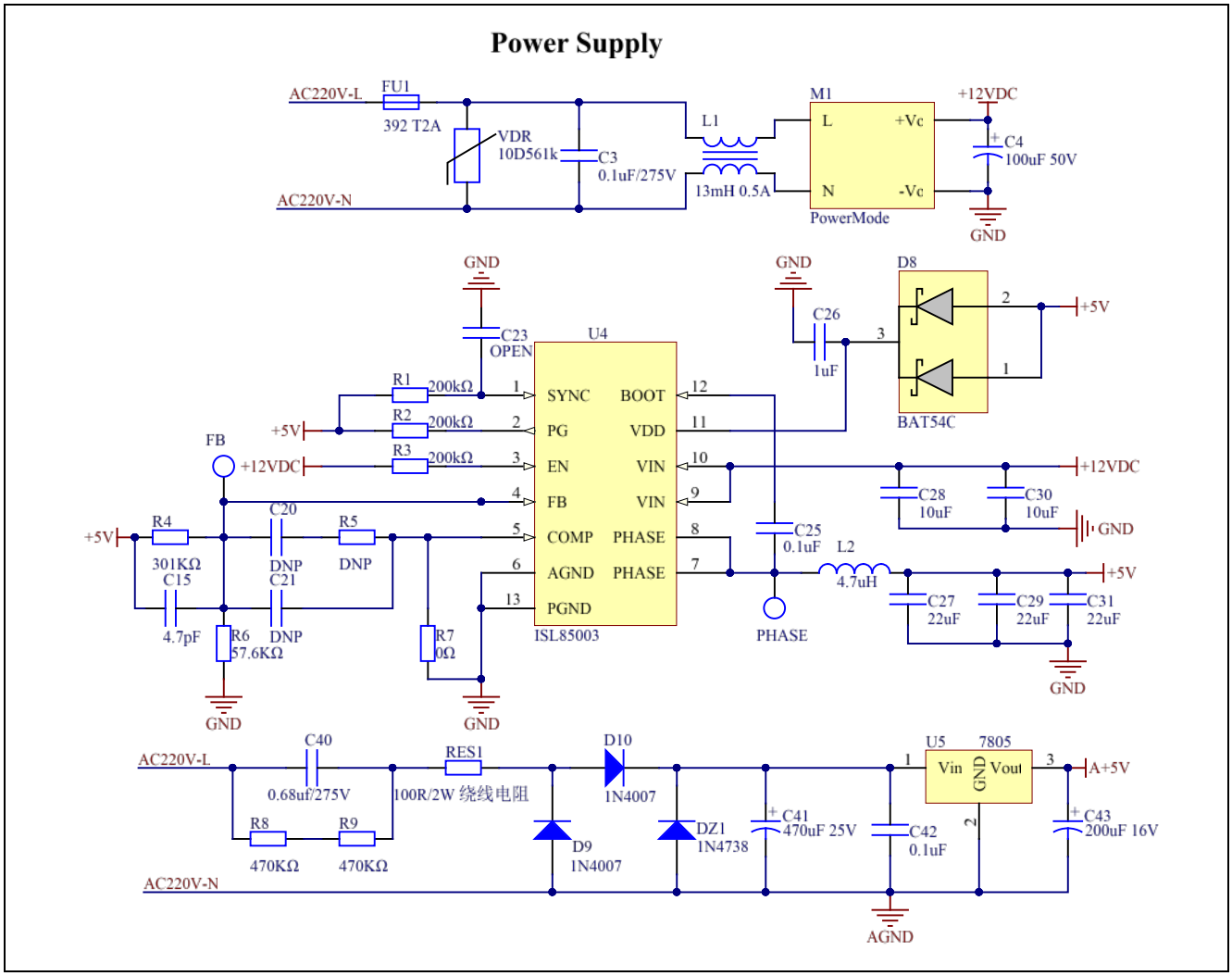

Figure 4.2 Power Supply Circuit

The power module transforms 220 V AC voltage to 12 V DC voltage for the 3 relays. The ISL85003 buck circuit reduces the 12 V DC voltage to 5 V DC voltage for the MCU and the Wi-Fi module. A low-cost RC step-down circuit is used to transform 220 V AC voltage to 5 V DC voltage for the low-cost single-phase active energy metering chip.

4.2 Energy Metering Circuit

Figure 4.3 shows the schematics of the energy metering circuit.

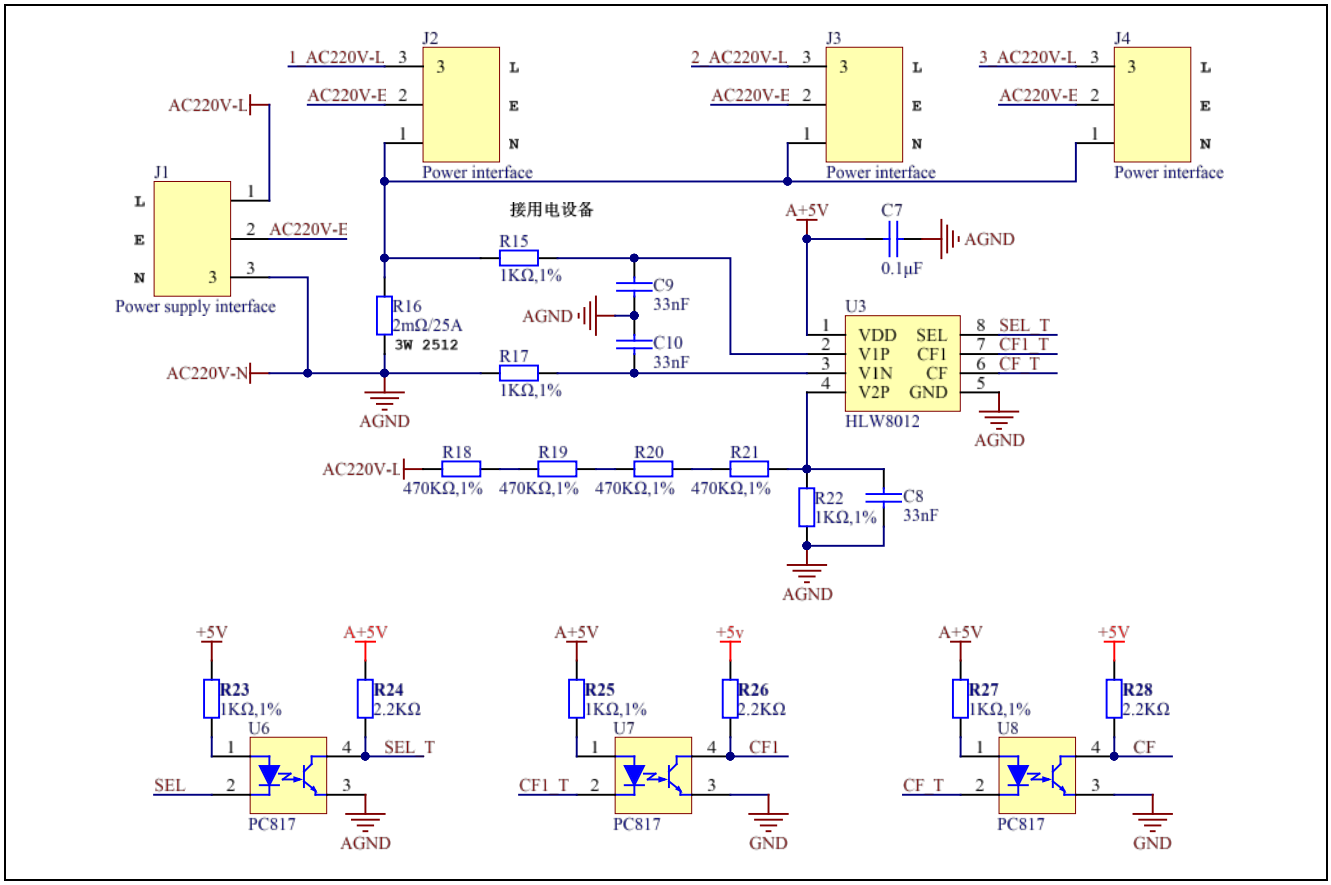

Figure 4.3 Energy Metering Circuit

The energy metering circuit detects the energy of the device plugged into the outlet through a low-cost single-phase energy metering chip in real-time. The V1P pin and the V1N pin are used to input current sampling signals. The CF pin is used to output power pulse, and the CF1 pin is used to output voltage pulse or current pulse. The SEL pin is used to make a selection between voltage input and current pulse.

4.3 Power Control Circuit

Figure 4.4 shows the schematics of the power control circuit.

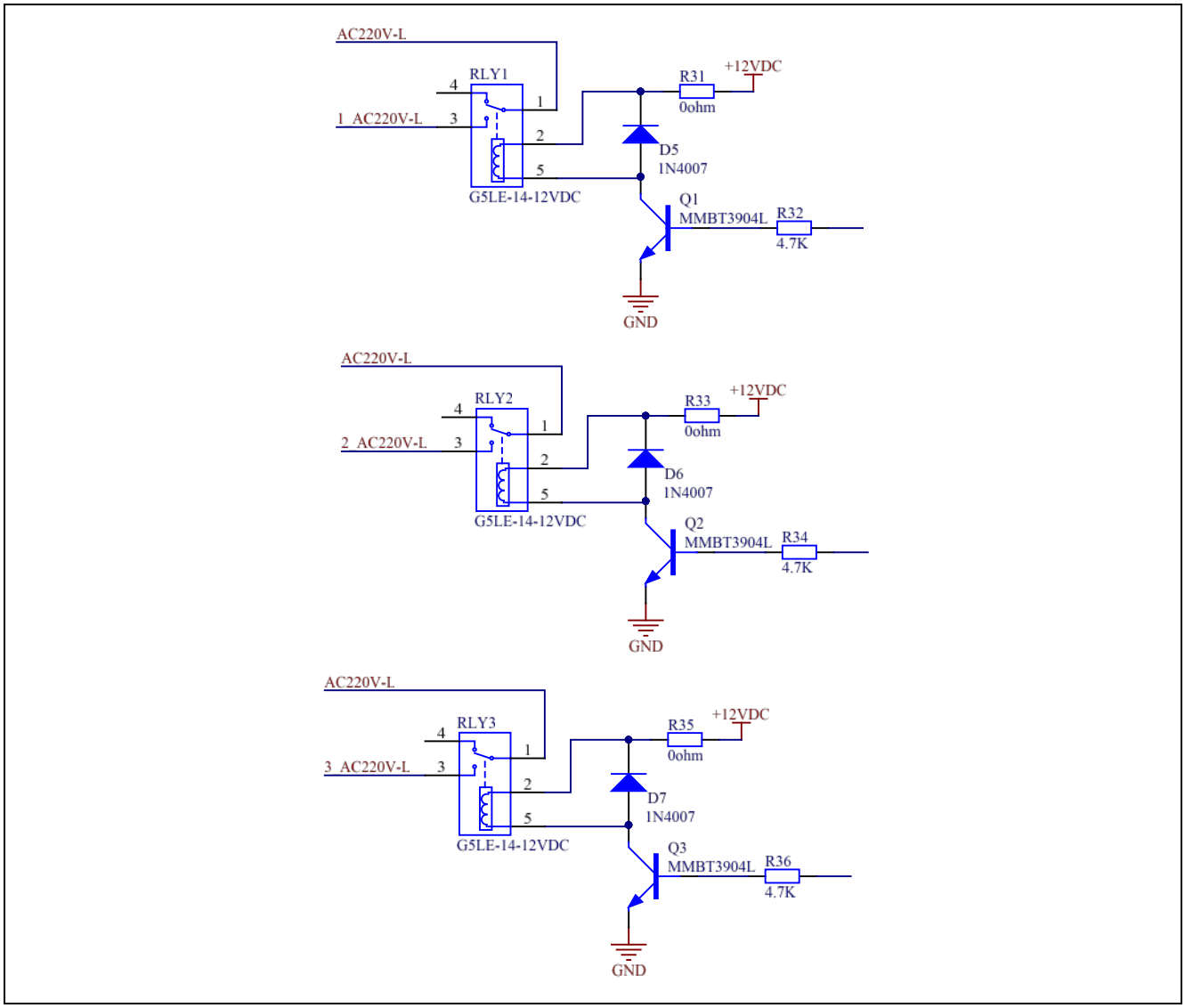

Figure 4.4 Power Control Circuit

The power control circuit consists of an NPN triode and an Omron single relay. The outlet power supply can be set to enabled or disabled through the control signal of NOx_AC220V-L(x=1~3) from the MCU.

5. Software

5.1 Integrated Development Environment

The sample code described in this chapter has been checked under the conditions listed in the table below.

Table 5.1 Operation Check Conditions

Item	Description
Microcontroller used	RL78/G13 (R5F1006EASP)
Operating frequency	High-speed on-chip oscillator (HOCO) clock: 32 MHz CPU/peripheral hardware clock: 32 MHz
Operating voltage	5 V (can run on a voltage range of 2.7 V to 5.5 V.) LVD detection voltage When power supply falls: TYP. 3.98 V When power supply rises: TYP. 4.06 V
Integrated development environment (CS+)	CS+ V6.00.00 from Renesas Electronics Corp.
C compiler (CS+)	CC-RL V1.06.00 from Renesas Electronics Corp.
Integrated development environment (e2 studio)	e2 studio V6.0.0 from Renesas Electronics Corp.
C compiler (e2 studio)	CC-RL V1.06.00 from Renesas Electronics Corp.

5.2 Option Byte

Table 5.2 summarizes the settings of the option bytes.

Table 5.2 Option Byte Settings

Address	Value	Description
000C0H/010C0H	11101111B	Watchdog timer counter operation enabled (counting started after reset)
000C1H/010C1H	01110011B	POR detection voltage When power supply falls: TYP. 3.98 V When power supply rises: TYP. 4.06 V
000C2H/010C2H	11111001B	Operating frequency: 32 MHz (2.7 V ~ 5.5 V)
000C3H/010C3H	10000100B	Enable on-chip debugging

5.3 Operation Outline

The tasks of the whole system are listed as below: reset/initialization task, idle task, measuring task (power, voltage, current), outlet data sending task, Wi-Fi setting task, and outlet controlling task.

Figure 5.1 shows the block diagram for the tasks transition.

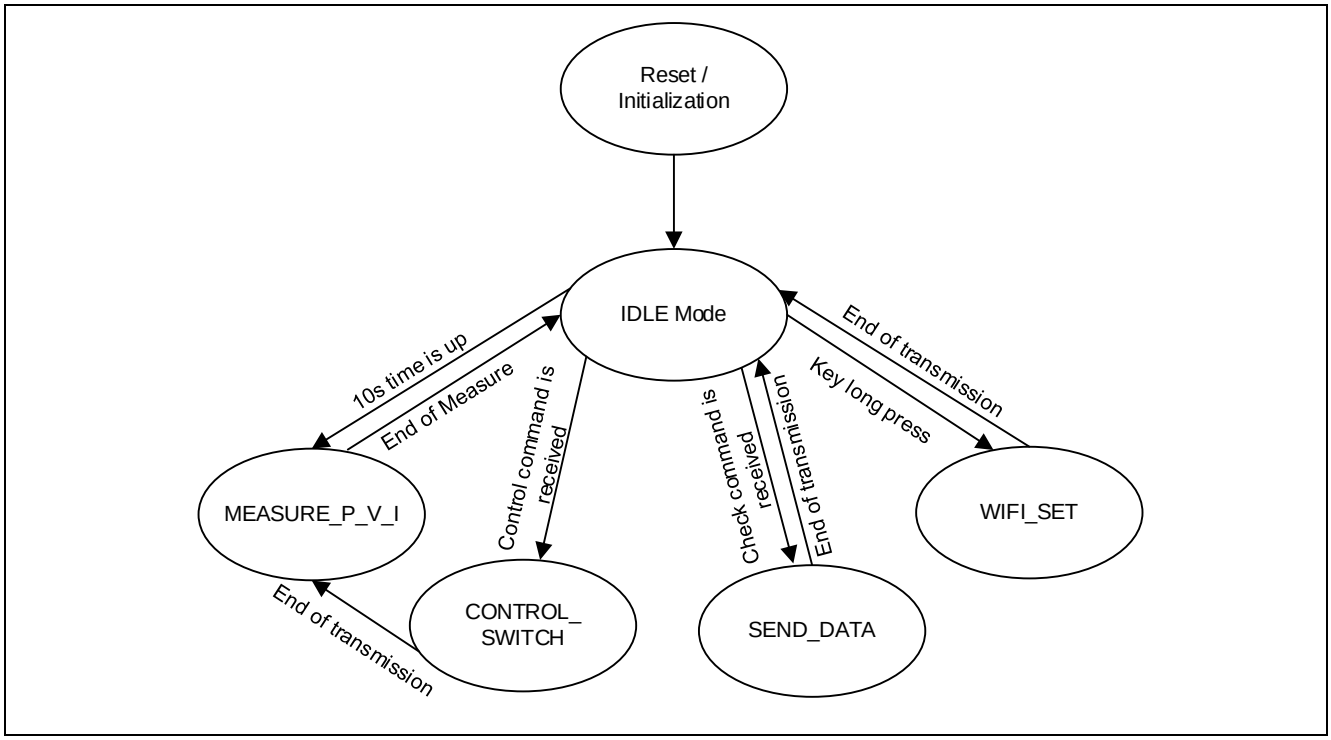

Figure 5.1 Tasks Transition Block Diagram

(1) Reset / Initialization

After power-on, the system executes reset/initialization task. System status and related global variables used by users will be initialized. After the initialization is completed, the system will execute the idle task.

(2) IDLE Mode

When the system finishes all the operations (transferring data via UART, turning ON/OFF outlets, etc.), it will enter the IDLE mode. In this mode, the HALT command will be implemented. Any interrupt (UART receive mode, INTP interrupt, timer interrupt) can make the system exit from the HALT mode. Then, the system will enter either the measuring task, outlet data sending task, Wi-Fi setting task, or outlet controlling task.

(3) Measuring Task

The MCU receives the power pulse, voltage pulse and current pulse sent by the energy metering chip. Then calculates the actual power value, voltage value and current value and saves them.

(4) Outlet Data Sending Task

After the MCU receives the instruction, the saved data will be sent to the Renesas IoT Sandbox, and then the Renesas IoT Sandbox will feed the data back to the app.

(5) Outlet Controlling Task

Set ON/OFF for each outlet according to the command sent from the mobile app. After setting, the system enters the Measuring Task.

(6) Wi-Fi Setting Task

Send instructions to the Wi-Fi module. Wi-Fi module will enter smart config mode and UDP communication mode according the instructions.

5.4 Flow Chart

5.4.1 Main Processing

Figure 5.2 to Figure 5.4 show the flowchart for main processing routine.

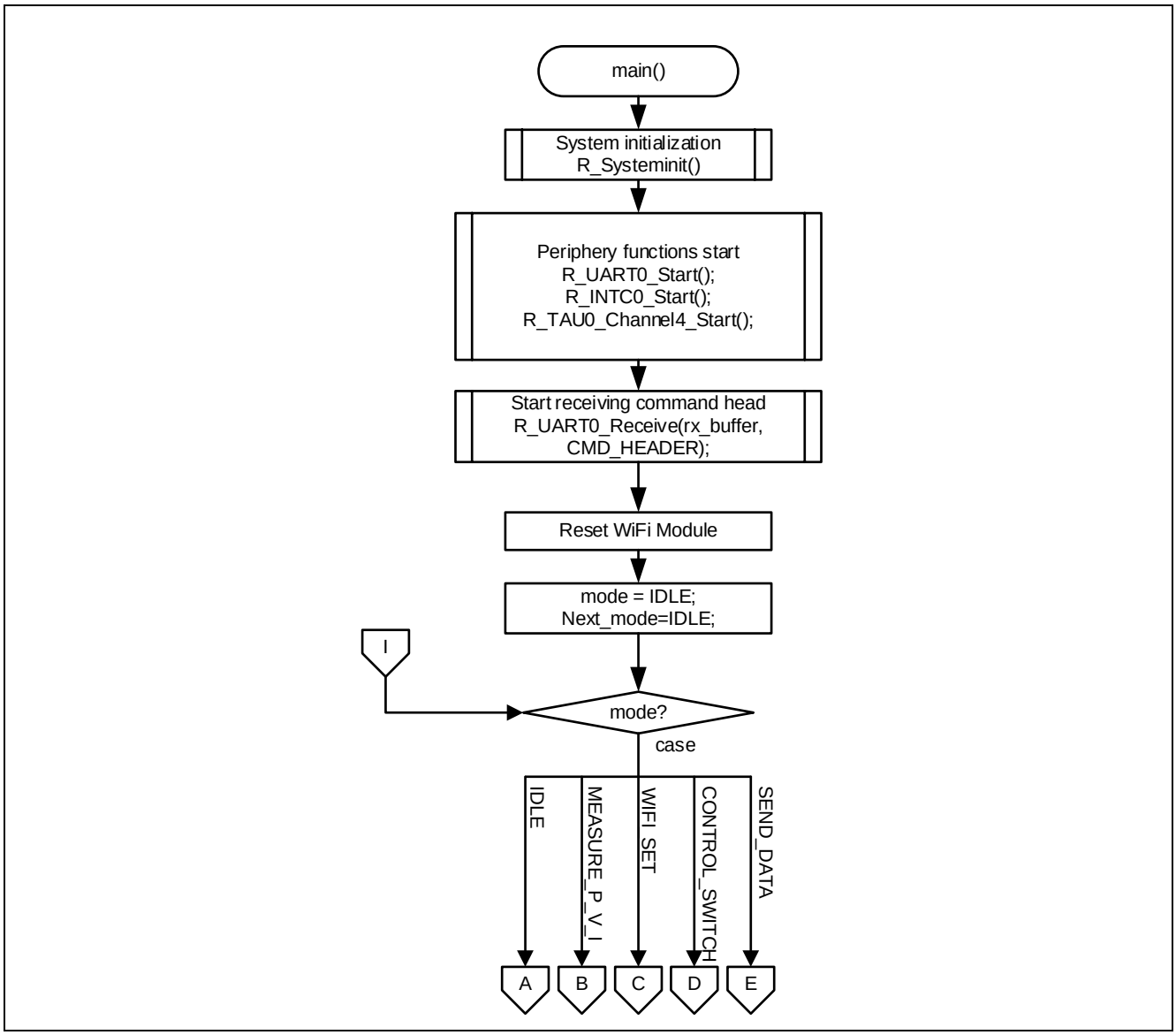

Figure 5.2 Main Processing (1/3)

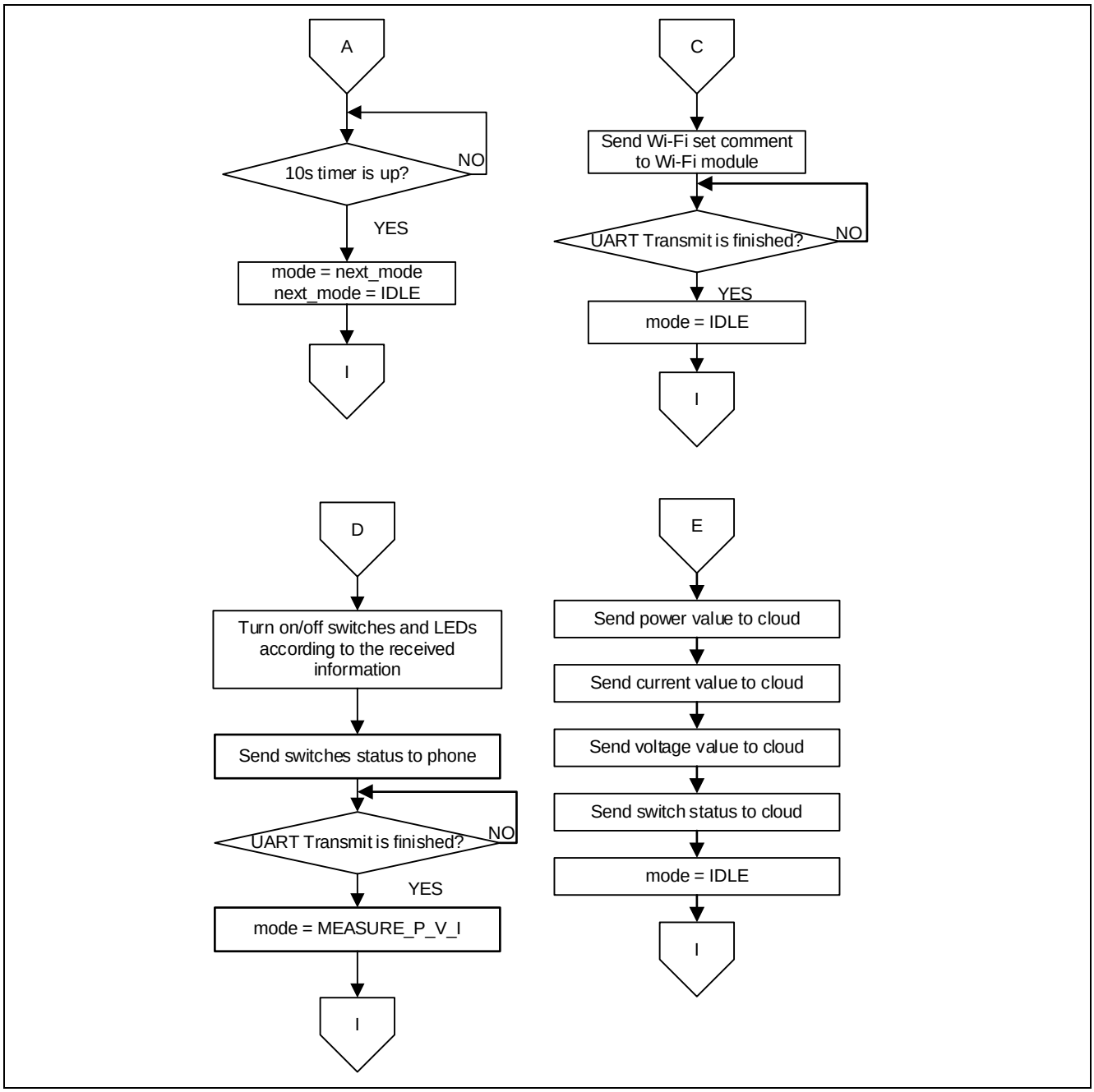

Figure 5.3 Main Processing (2/3)

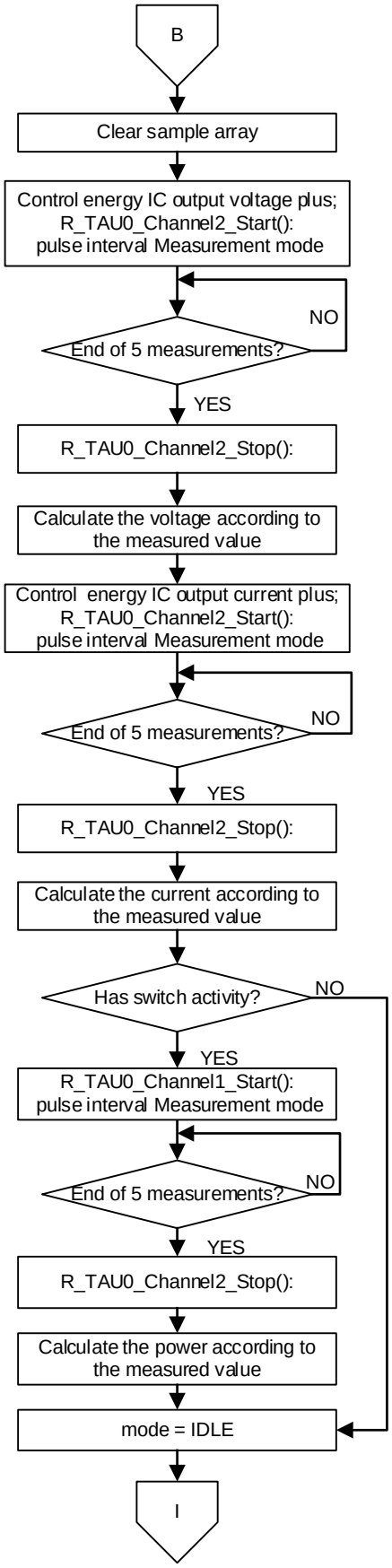

Figure 5.4 Main Processing (3/3)

5.4.2 UART Receive Interrupt Sub-Routine

Figure 5.5 and Figure 5.6 show the flowchart for UART receive interrupt sub-routine.

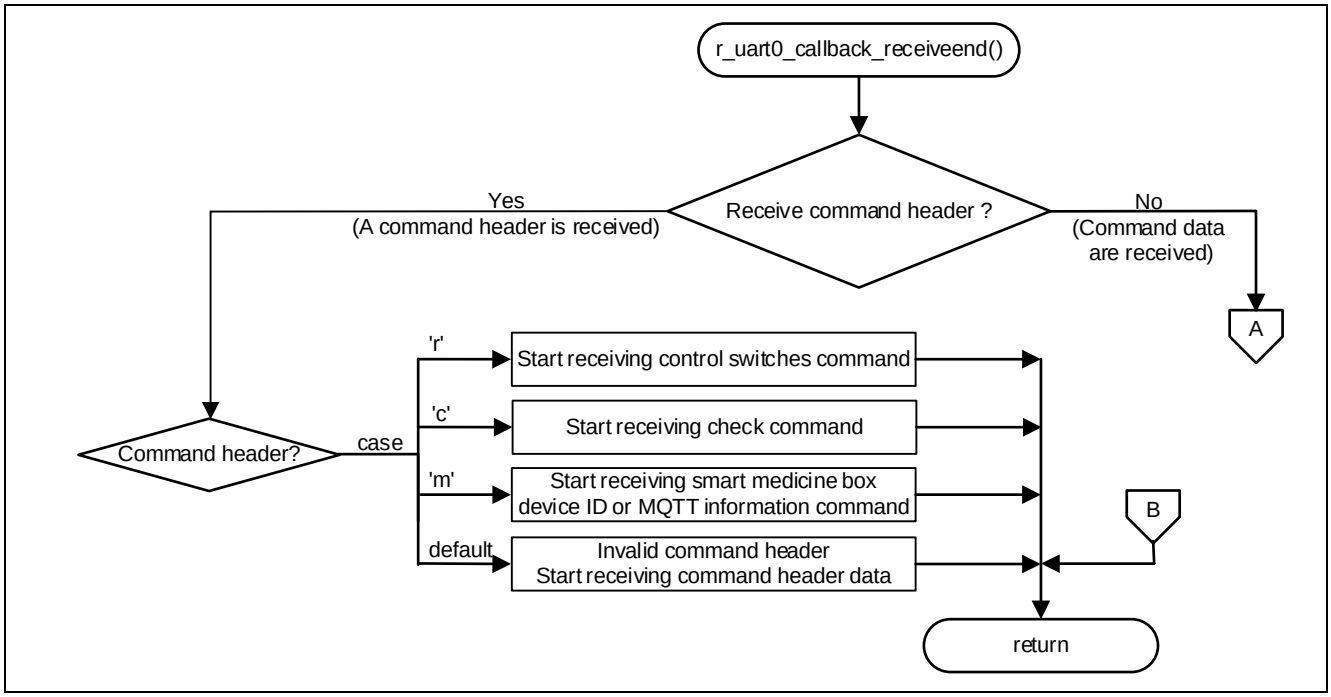

Figure 5.5 UART Receive Interrupt Sub-Routine (1)

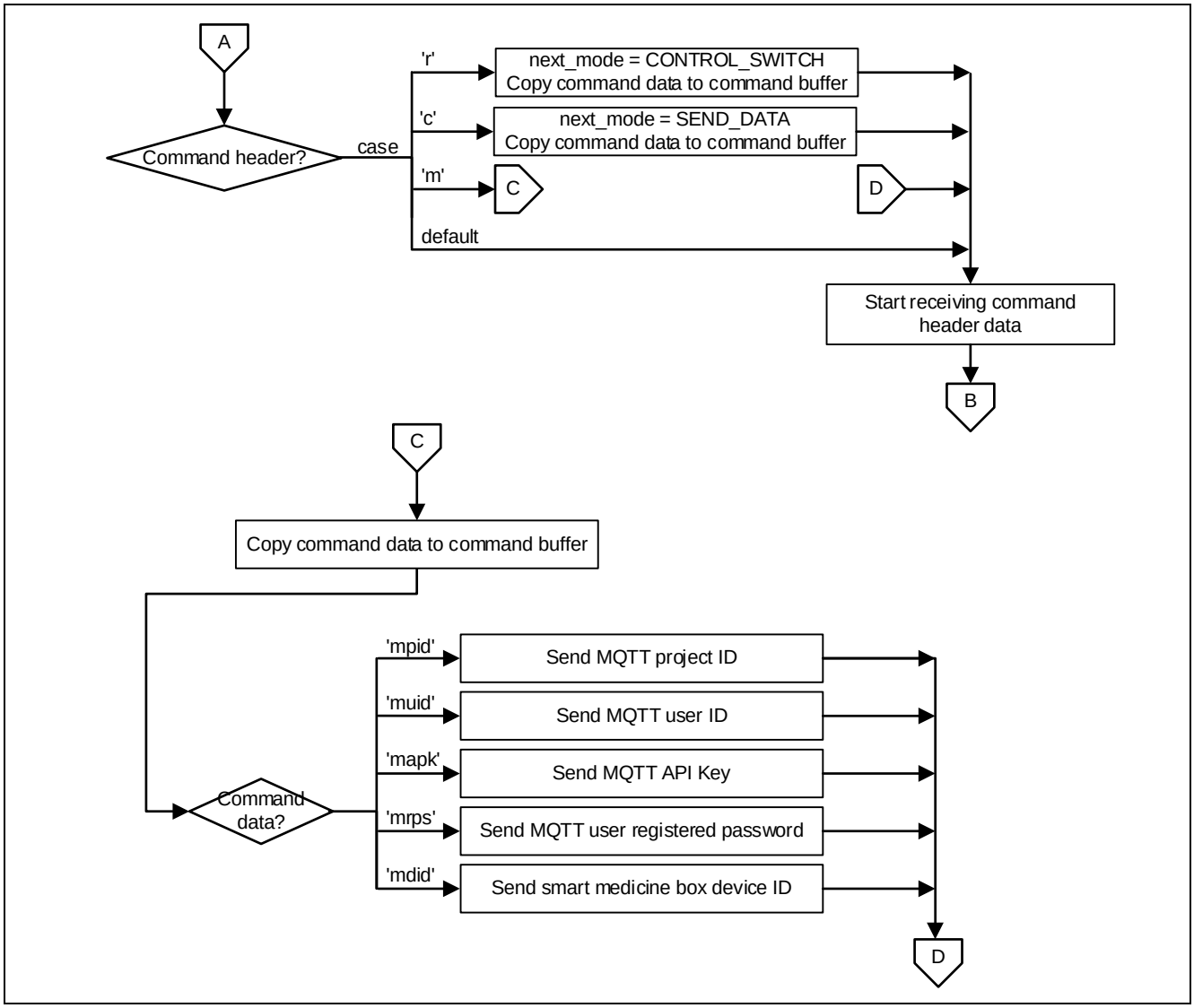

Figure 5.6 UART Receive Interrupt Sub-Routine (2)

6. Sample Code

The sample code is available on the Renesas Electronics Website.

7. Reference Documents

RL78/G13 User's Manual: Hardware (R01UH0146)

RL78 Family User's Manual: Software (R01US0015)

(The latest versions of the documents are available on the Renesas Electronics Website.)

Technical Updates/Technical News

(The latest information can be downloaded from the Renesas Electronics Website.)

Website and Support

Renesas Electronics Website
http://www.renesas.com/

Inquiries
http://www.renesas.com/contact/

All trademarks and registered trademarks are the property of their respective owners.

Revision History

		Description	
Rev.	**Date**	**Page**	**Summary**
1.00	Mar. 31, 2019	—	First edition issued

General Precautions in the Handling of Microprocessing Unit and Microcontroller Unit Products

The following usage notes are applicable to all Microprocessing unit and Microcontroller unit products from Renesas. For detailed usage notes on the products covered by this document, refer to the relevant sections of the document as well as any technical updates that have been issued for the products.

1. Precaution against Electrostatic Discharge (ESD)

   A strong electrical field, when exposed to a CMOS device, can cause destruction of the gate oxide and ultimately degrade the device operation. Steps must be taken to stop the generation of static electricity as much as possible, and quickly dissipate it when it occurs. Environmental control must be adequate. When it is dry, a humidifier should be used. This is recommended to avoid using insulators that can easily build up static electricity. Semiconductor devices must be stored and transported in an anti-static container, static shielding bag or conductive material. All test and measurement tools including work benches and floors must be grounded. The operator must also be grounded using a wrist strap. Semiconductor devices must not be touched with bare hands. Similar precautions must be taken for printed circuit boards with mounted semiconductor devices.
2. Processing at power-on

   The state of the product is undefined at the time when power is supplied. The states of internal circuits in the LSI are indeterminate and the states of register settings and pins are undefined at the time when power is supplied. In a finished product where the reset signal is applied to the external reset pin, the states of pins are not guaranteed from the time when power is supplied until the reset process is completed. In a similar way, the states of pins in a product that is reset by an on-chip power-on reset function are not guaranteed from the time when power is supplied until the power reaches the level at which resetting is specified.
3. Input of signal during power-off state

   Do not input signals or an I/O pull-up power supply while the device is powered off. The current injection that results from input of such a signal or I/O pull-up power supply may cause malfunction and the abnormal current that passes in the device at this time may cause degradation of internal elements. Follow the guideline for input signal during power-off state as described in your product documentation.
4. Handling of unused pins

   Handle unused pins in accordance with the directions given under handling of unused pins in the manual. The input pins of CMOS products are generally in the high-impedance state. In operation with an unused pin in the open-circuit state, extra electromagnetic noise is induced in the vicinity of the LSI, an associated shoot-through current flows internally, and malfunctions occur due to the false recognition of the pin state as an input signal become possible.
5. Clock signals

   After applying a reset, only release the reset line after the operating clock signal becomes stable. When switching the clock signal during program execution, wait until the target clock signal is stabilized. When the clock signal is generated with an external resonator or from an external oscillator during a reset, ensure that the reset line is only released after full stabilization of the clock signal. Additionally, when switching to a clock signal produced with an external resonator or by an external oscillator while program execution is in progress, wait until the target clock signal is stable.
6. Voltage application waveform at input pin

   Waveform distortion due to input noise or a reflected wave may cause malfunction. If the input of the CMOS device stays in the area between V_{IL} (Max.) and V_{IH} (Min.) due to noise, for example, the device may malfunction. Take care to prevent chattering noise from entering the device when the input level is fixed, and also in the transition period when the input level passes through the area between V_{IL} (Max.) and V_{IH} (Min.).
7. Prohibition of access to reserved addresses

   Access to reserved addresses is prohibited. The reserved addresses are provided for possible future expansion of functions. Do not access these addresses as the correct operation of the LSI is not guaranteed.
8. Differences between products

   Before changing from one product to another, for example to a product with a different part number, confirm that the change will not lead to problems. The characteristics of a microprocessing unit or microcontroller unit products in the same group but having a different part number might differ in terms of internal memory capacity, layout pattern, and other factors, which can affect the ranges of electrical characteristics, such as characteristic values, operating margins, immunity to noise, and amount of radiated noise. When changing to a product with a different part number, implement a system-evaluation test for the given product.

Notice

1. Descriptions of circuits, software and other related information in this document are provided only to illustrate the operation of semiconductor products and application examples. You are fully responsible for the incorporation or any other use of the circuits, software, and information in the design of your product or system. Renesas Electronics disclaims any and all liability for any losses and damages incurred by you or third parties arising from the use of these circuits, software, or information.
2. Renesas Electronics hereby expressly disclaims any warranties against and liability for infringement or any other claims involving patents, copyrights, or other intellectual property rights of third parties, by or arising from the use of Renesas Electronics products or technical information described in this document, including but not limited to, the product data, drawings, charts, programs, algorithms, and application examples.
3. No license, express, implied or otherwise, is granted hereby under any patents, copyrights or other intellectual property rights of Renesas Electronics or others.
4. You shall not alter, modify, copy, or reverse engineer any Renesas Electronics product, whether in whole or in part. Renesas Electronics disclaims any and all liability for any losses or damages incurred by you or third parties arising from such alteration, modification, copying or reverse engineering.
5. Renesas Electronics products are classified according to the following two quality grades: “Standard” and “High Quality”. The intended applications for each Renesas Electronics product depends on the product’s quality grade, as indicated below.
   "Standard": Computers; office equipment; communications equipment; test and measurement equipment; audio and visual equipment; home electronic appliances; machine tools; personal electronic equipment; industrial robots; etc.
   "High Quality": Transportation equipment (automobiles, trains, ships, etc.); traffic control (traffic lights); large-scale communication equipment; key financial terminal systems; safety control equipment; etc.
   Unless expressly designated as a high reliability product or a product for harsh environments in a Renesas Electronics data sheet or other Renesas Electronics document, Renesas Electronics products are not intended or authorized for use in products or systems that may pose a direct threat to human life or bodily injury (artificial life support devices or systems; surgical implantations; etc.), or may cause serious property damage (space system; undersea repeaters; nuclear power control systems; aircraft control systems; key plant systems; military equipment; etc.). Renesas Electronics disclaims any and all liability for any damages or losses incurred by you or any third parties arising from the use of any Renesas Electronics product that is inconsistent with any Renesas Electronics data sheet, user’s manual or other Renesas Electronics document.
6. When using Renesas Electronics products, refer to the latest product information (data sheets, user’s manuals, application notes, “General Notes for Handling and Using Semiconductor Devices” in the reliability handbook, etc.), and ensure that usage conditions are within the ranges specified by Renesas Electronics with respect to maximum ratings, operating power supply voltage range, heat dissipation characteristics, installation, etc. Renesas Electronics disclaims any and all liability for any malfunctions, failure or accident arising out of the use of Renesas Electronics products outside of such specified ranges.
7. Although Renesas Electronics endeavors to improve the quality and reliability of Renesas Electronics products, semiconductor products have specific characteristics, such as the occurrence of failure at a certain rate and malfunctions under certain use conditions. Unless designated as a high reliability product or a product for harsh environments in a Renesas Electronics data sheet or other Renesas Electronics document, Renesas Electronics products are not subject to radiation resistance design. You are responsible for implementing safety measures to guard against the possibility of bodily injury, injury or damage caused by fire, and/or danger to the public in the event of a failure or malfunction of Renesas Electronics products, such as safety design for hardware and software, including but not limited to redundancy, fire control and malfunction prevention, appropriate treatment for aging degradation or any other appropriate measures. Because the evaluation of microcomputer software alone is very difficult and impractical, you are responsible for evaluating the safety of the final products or systems manufactured by you.
8. Please contact a Renesas Electronics sales office for details as to environmental matters such as the environmental compatibility of each Renesas Electronics product. You are responsible for carefully and sufficiently investigating applicable laws and regulations that regulate the inclusion or use of controlled substances, including without limitation, the EU RoHS Directive, and using Renesas Electronics products in compliance with all these applicable laws and regulations. Renesas Electronics disclaims any and all liability for damages or losses occurring as a result of your noncompliance with applicable laws and regulations.
9. Renesas Electronics products and technologies shall not be used for or incorporated into any products or systems whose manufacture, use, or sale is prohibited under any applicable domestic or foreign laws or regulations. You shall comply with any applicable export control laws and regulations promulgated and administered by the governments of any countries asserting jurisdiction over the parties or transactions.
10. It is the responsibility of the buyer or distributor of Renesas Electronics products, or any other party who distributes, disposes of, or otherwise sells or transfers the product to a third party, to notify such third party in advance of the contents and conditions set forth in this document.
11. This document shall not be reprinted, reproduced or duplicated in any form, in whole or in part, without prior written consent of Renesas Electronics.
12. Please contact a Renesas Electronics sales office if you have any questions regarding the information contained in this document or Renesas Electronics products.

(Note1) “Renesas Electronics” as used in this document means Renesas Electronics Corporation and also includes its directly or indirectly controlled subsidiaries.
(Note2) “Renesas Electronics product(s)” means any product developed or manufactured by or for Renesas Electronics.

(Rev.4.0-1 November 2017)

Corporate Headquarters

TOYOSU FORESIA, 3-2-24 Toyosu,
Koto-ku, Tokyo 135-0061, Japan
www.renesas.com

Trademarks

Renesas and the Renesas logo are trademarks of Renesas Electronics Corporation. All trademarks and registered trademarks are the property of their respective owners.

Contact information

For further information on a product, technology, the most up-to-date version of a document, or your nearest sales office, please visit: www.renesas.com/contact/.

© 2019 Renesas Electronics Corporation. All rights reserved.