Renesas RA MCU CAN/Sensor Evaluation Kit

(RA2L1 CAN Sensor EVB & RA4M1 Monitor EVB)

User’s Manual

Version 0.8

Safety Precautions

This document describes items to be observed to ensure the safe use of this evaluation board. Be sure to read this document before using the board.

Symbols Used

This document uses the following symbols for items to be observed to ensure the safe use of the unit. The symbols are followed by a brief explanation of the possible extent of problems which may occur if the items are not observed.

Danger	The risk is high if the warning is not observed, and the user may suffer death or serious injury.
Warning	The user may suffer death or serious injury if the warning is not observed.
Caution	Human injury or property damage may occur if the caution is not observed.

The following symbols express behaviors that are prohibited in order to prevent injury or accident.

General prohibition The action mentioned is prohibited.	**Do not touch** Touching the specified location may cause injury.	**Do not disassemble** Disassembly may cause a problem such as electric shock or product failure.
Keep away from water Use near water poses the risk of electric shock or product failure if moisture were to contact the unit.	**Flammable** Proximity to flame may cause the unit to catch fire.	**Do not touch with wet hands** Touching with wet hands may cause electric shock or product failure.

The following symbols are used for cautions to prevent product failure and accidents.

General caution Unspecified general cautions	**Caution: Hot** Human injury due to a high temperature

The following symbols are used for instructions to prevent product failure and accidents.

Action required of the user	Instruction to unplug from AC power supply

1. Overview

1.1 RA CAN Sensor Evaluation Kit includes:

- 3 pcs RA2L1 CAN Sensor EVB boards.
- 1 pcs RA4M1 Monitor EVB board.
- 1 USB cable.

1.2 Purposes:

- To help users evaluate Renesas Flow Sensor, Humidity/Temperature Sensor and Gas Sensor quickly.
- Renesas MCU RA2L1and RA4M1 are used for the quick evaluation of CAN Bus.
- Renesas AC/DC IC – RAA223011 quick evaluation.

1.3 Functions:

A. RA2L1 CAN Sensor EVB

- RA2L1 MCU easy development board.
- HS3001Humidity/Temperature Sensor provide temperature and humidity measurement.
- FS2012 Flow Sensor provides gas and liquid flow measurement.
- ZMOD4410 Gas Sensor provides air quality testing.
- Isolated CAN Bus data transmission.
- AC/DC power supply conversion circuit.

B. RA4M1 Monitor EVB

- RA4M1 MCU easy development board.
- Isolated/Non-Isolated CAN Bus data transmission.
- CAN Bus/USB data exchange.

1.4 Software Installation:

Please use the following link to download and install Renesas RA MCU development environment e2studio and FSP.

https://github.com/renesas/fsp/releases

1.5 Block Diagram.

A. Figure 1-1 is the block diagram of RA CAN-Sensor evaluation kit. When using AC power supply, please pay special attention to not touching the circuit board to avoid the risk of the electric shock.

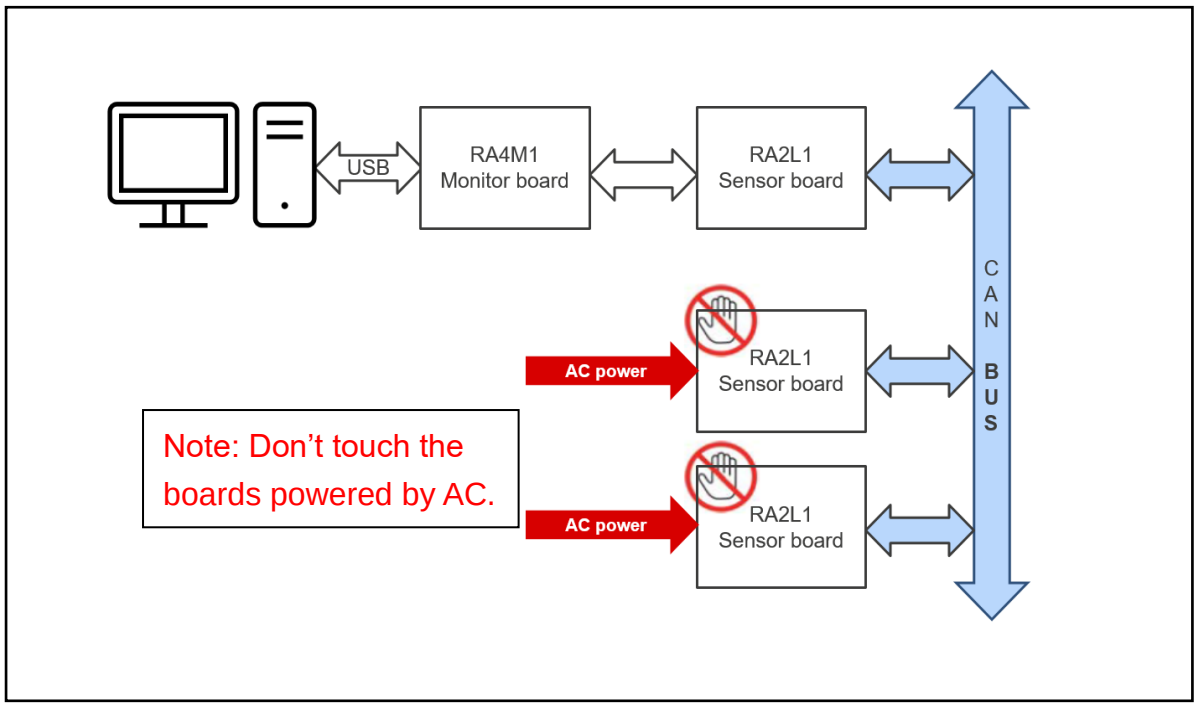

Figure 1-1 RA CAN-Sensor Evaluation Kit Block Diagram

B. Figure 1-2 is the block diagram of RA2L1 CAN Sensor EVB.

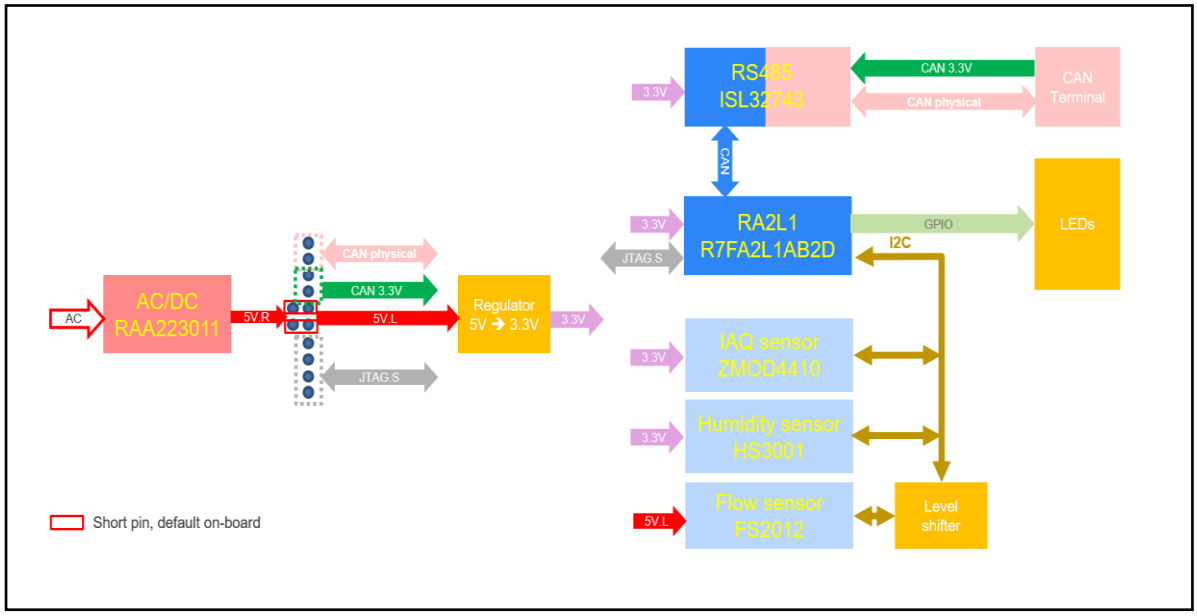

Figure 1-2 RA2L1 CAN Sensor EVB Block Diagram

C. Figure 1-3 is the block diagram of RA4M1 Monitor EVB.

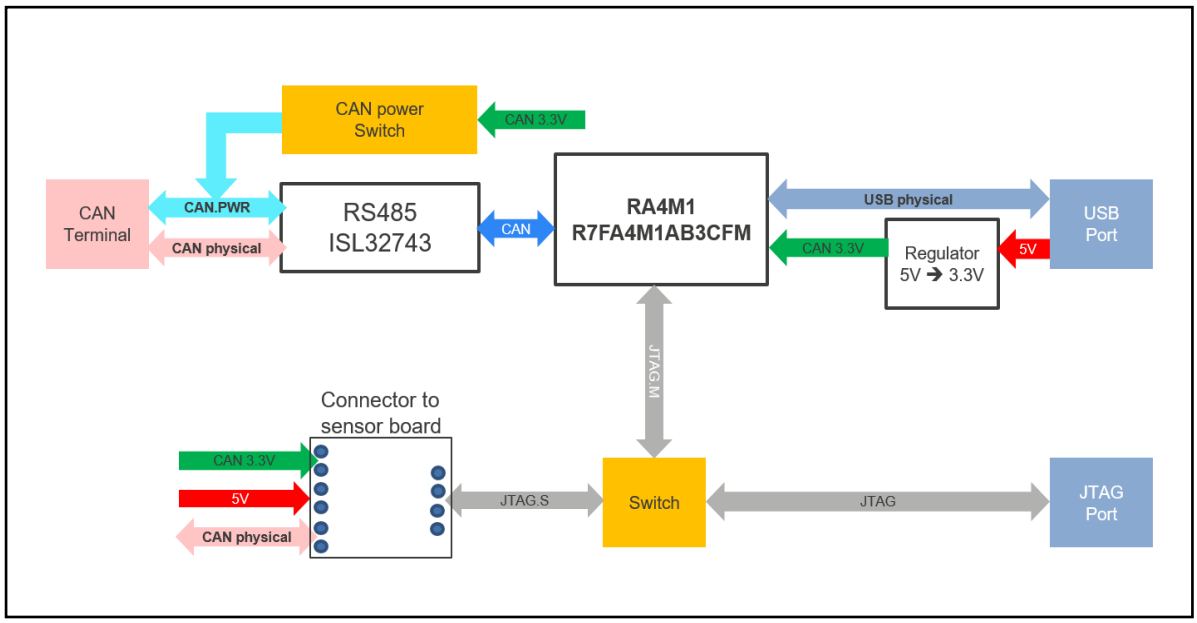

Figure 1-3 RA4M1 Monitor EVB Block Diagram

2. Board Layout

2.1 Figure 2-1 is the top view of RA2L1 CAN Sensor EVB.

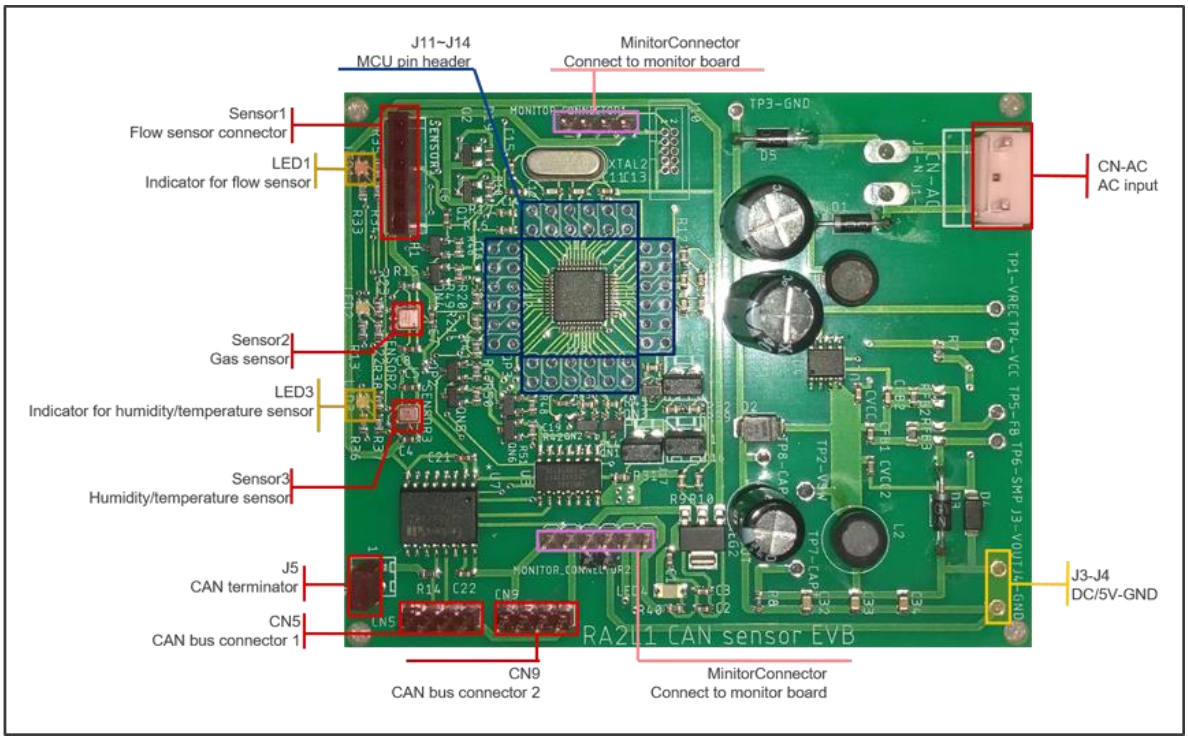

Figure 2-1 RA2L1 CAN Sensor EVB Top View

2.2 Figure 2-2 is the diagram of RA2L1 CAN Sensor EVB and Flow Sensor. Please pay attention to the direction of the Flow Sensor.

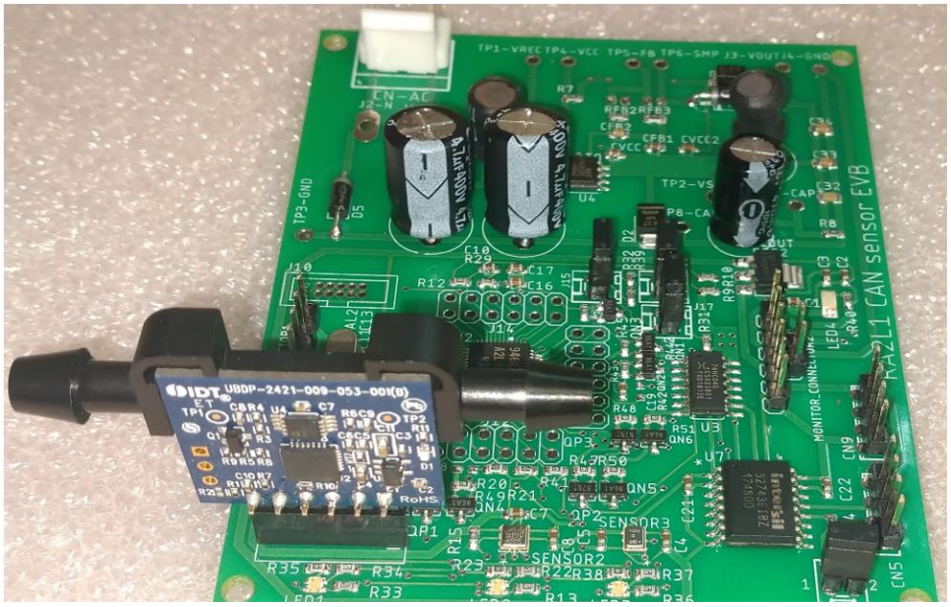

Figure 2-2 RA2L1 CAN Sensor EVB and Flow Sensor Diagram

2.3 Figure 2-3 is the top view of RA4M1 Monitor EVB.

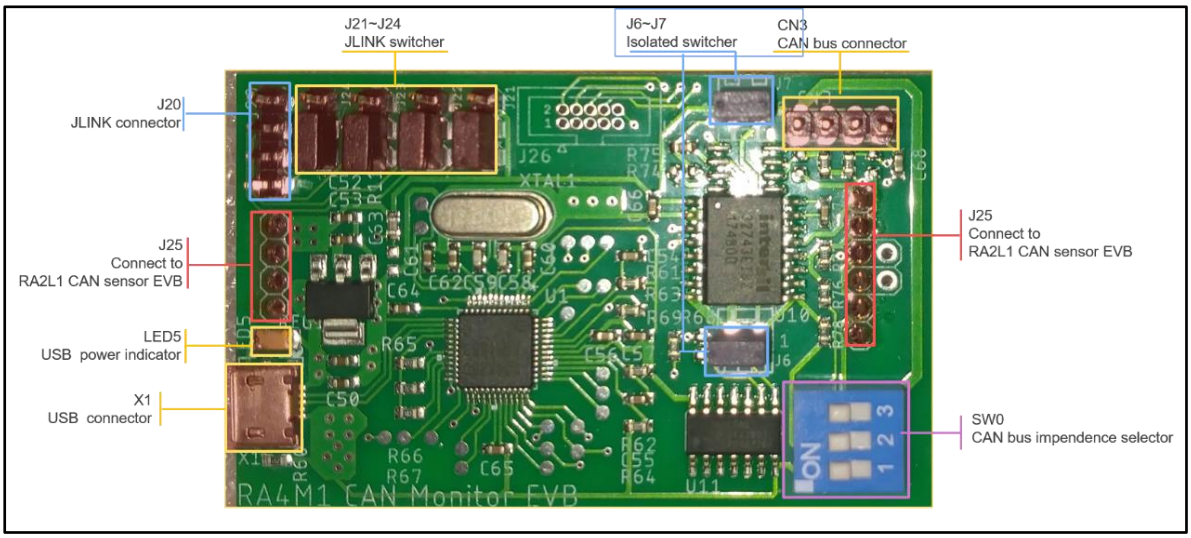

Figure 2-3 RA4M1 Monitor EVB Top View

2.4 Figure 2-4 is the diagram of RA2L1 CAN Sensor EVB and RA4M1 Monitor EVB.

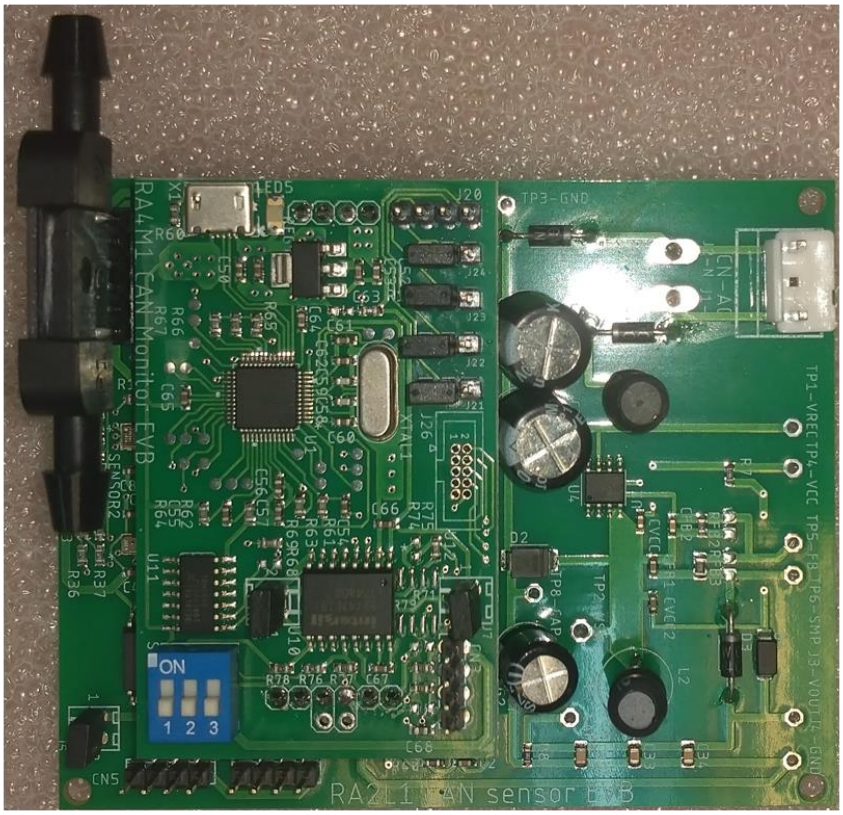

Figure 2-4 RA2L1 CAN Sensor EVB and RA4M1 Monitor EVB Diagram

3. JLINK Debugging

3.1 Program development/debugging using JLINK on RA2L1 CAN Sensor EVB

Figure 3-1 shows how to connect JLINK to RA2L1 CAN Sensor EVB for program development/debugging and programming. If the debugging target is RA2L1 CAN Sensor EVB, please follow the following steps:

A. Combine RA2L1 CAN Sensor EVB and RA4M1 Monitor EVB.
B. Connect JLINK analog interface to J20/JLINK connector on RA4M1 Monitor EVB.
C. As shown in the yellow box in Figure 3-1, place short jumper caps separately on Pin2/3 of J21~J24/JLINK switcher.

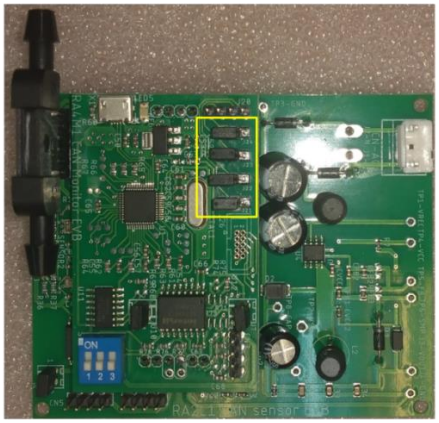

Figure 3-1 Program Development/Debugging Using JLINK on RA2L1 CAN Sensor EVB

3.2 Program development/debugging using JLINK on RA4M1 Monitor EVB

Figure 3-2 shows how to connect JLINK to RA4M1 Monitor EVB for program development/debugging and programming. If the debugging target is RA4M1 Monitor EVB, please follow the following steps:

A. Connect JLINK analog interface to J20/JLINK connector on RA4M1 Monitor EVB.
B. As shown in the yellow box in Figure 3-2, place short jumper caps separately on Pin1/2 of J21~J24/JLINK switcher.

Figure 3-2 Program Development/Debugging Using JLINK on RA4M1 Monitor EVB

4. Circuit Introduction

4.1 RA2L1 CAN Sensor EVB

A. MCU RA2L1/48pin

- Power supply: 3.3V
- System clock: Quartz crystal/12MHz.
- Reset signal: Power-on reset signal in MCU, and JLINK reset signal.

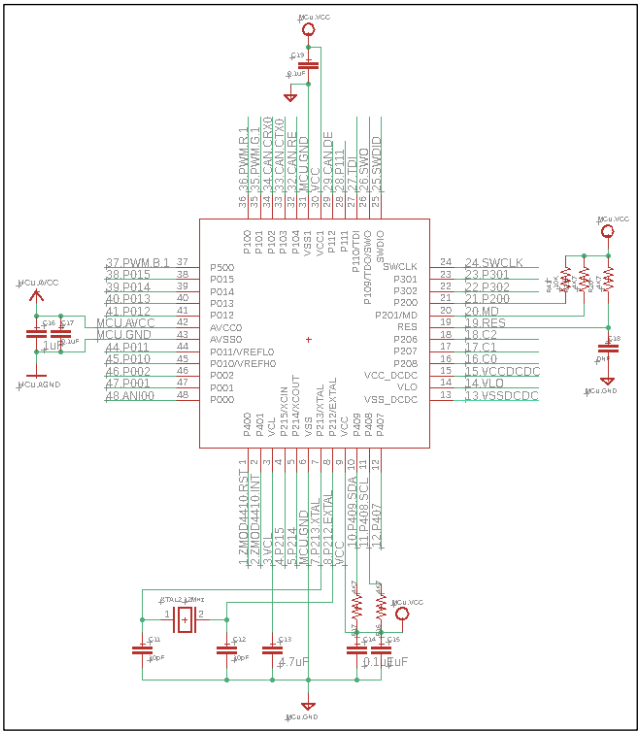

Figure 4-1 RA2L1 MCU Circuit

B. Flow Sensor FS2012

- As shown in Figure 4-2, FS2012 is not placed on the PCB directly, but connected to the PCB through Sensor 1 connector.
- Power supply: 5V
- Interface: I2C.
- Level shifter: 5V ←→ 3.3V

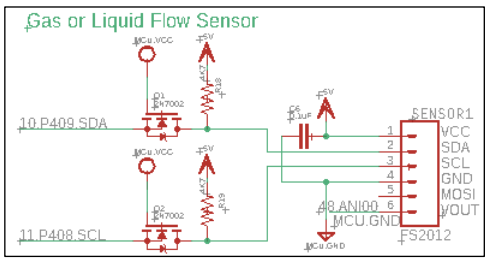

Figure 4-2 Flow Sensor Circuit

C. Gas Sensor ZMOD4410

- Power supply: 3.3V
- Interface: I2C

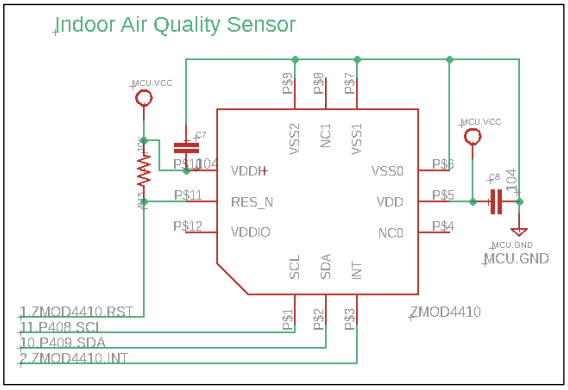

Figure 4-3 Gas Sensor Circuit

D. Humidity/Temperature Sensor HS3001

- Power supply: 3.3V
- Interface: I2C

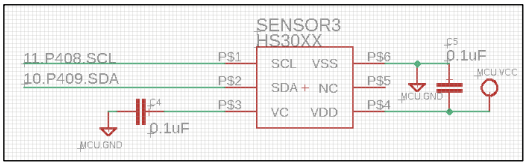

Figure 4-4 Humidity/Temperature Sensor Circuit

E. CAN Transceiver ISL32743

- Isolated RS485 transceiver.
- Power supply:
  a. MCU terminal (V1/G1): Connect to MCU VCC 3.3V.
  b. BUS terminal (V2/G2): As shown in Figure 4-5, CAN.V2/CAN.G2 are from MONITOR_CONNECTOR or CAN header (CAN Bus connector1/2).
- Bus terminator (J5): If EVB is at the end of the Bus, J5 needs to be short-circuited, otherwise keep it open.

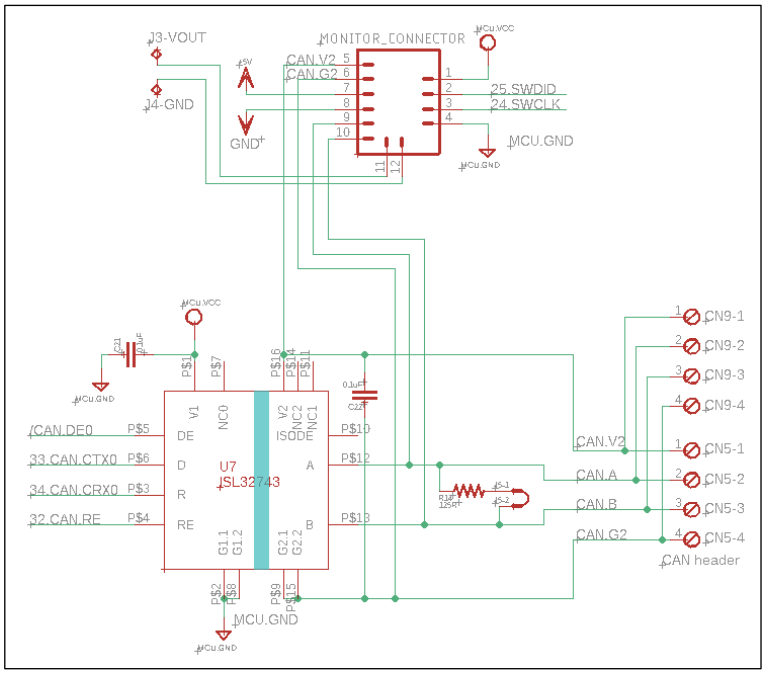

Figure 4-5 RA2L1 CAN Sensor EVB/CAN Transceiver Circuit

F. LDO Voltage Regulation Circuit

- Input: 5V
- Output: 3.3V. Provides VCC to MCU/CAN Transceiver/Gas Sensor/Humidity Sensor.

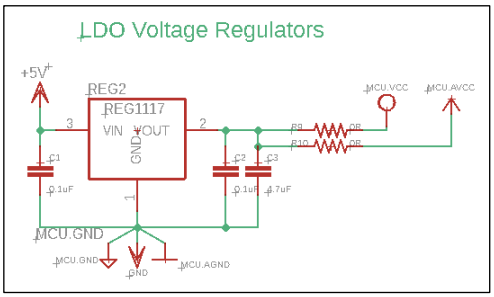

Figure 4-6 LDO Voltage Regulation Circuit

G. Non-Isolated AC/DC Converter RAA223011

- Input: AC90V~230V
- Output: DC5V±0.5V/300mA

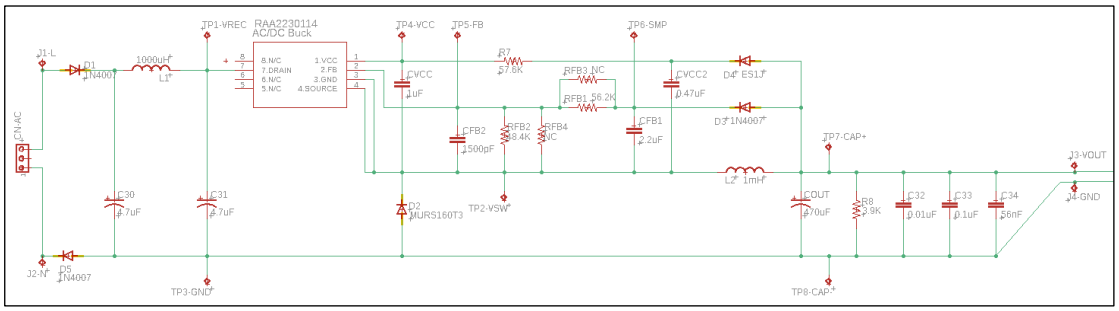

Figure 4-7 AC/DC Converter Circuit

4.2 RA4M1 Monitor EVB

A. MCU RA4M1/48pin

- Power supply: 3.3V
- System clock: Quartz crystal/12MHz.
- Reset signal: Power-on reset signal in MCU, and JLINK reset signal.

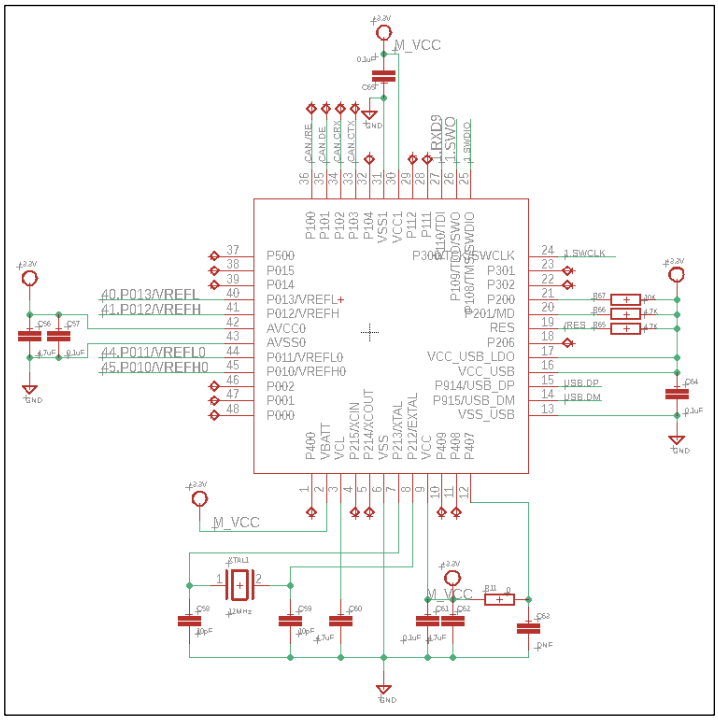

Figure 4-8 RA4M1 MCU Circuit

B. CAN Transceiver ISL32743

- Isolated RS485 transceiver.
- Power supply:
  a. MCU terminal (V1/G1): Connect to MCU VCC 3.3V.
  b. BUS terminal (V2/G2):
     - In Figure 4-9, if J6/J7 are short-circuited, and SW0-1/2/3 are all on, V2/G2 come from MCU, and the circuit has no isolation effect.
     - In Figure 4-9, if J6/J7 are open and SW0-1/2/3 are all off, V2/G2 come from CAN.V2/CAN.G2 of the CAN header (CAN Bus connector). The circuit has isolation effect.
- Bus terminator (J5): If EVB is at the end of the Bus, J5 needs to be short-circuited, otherwise keep it open.

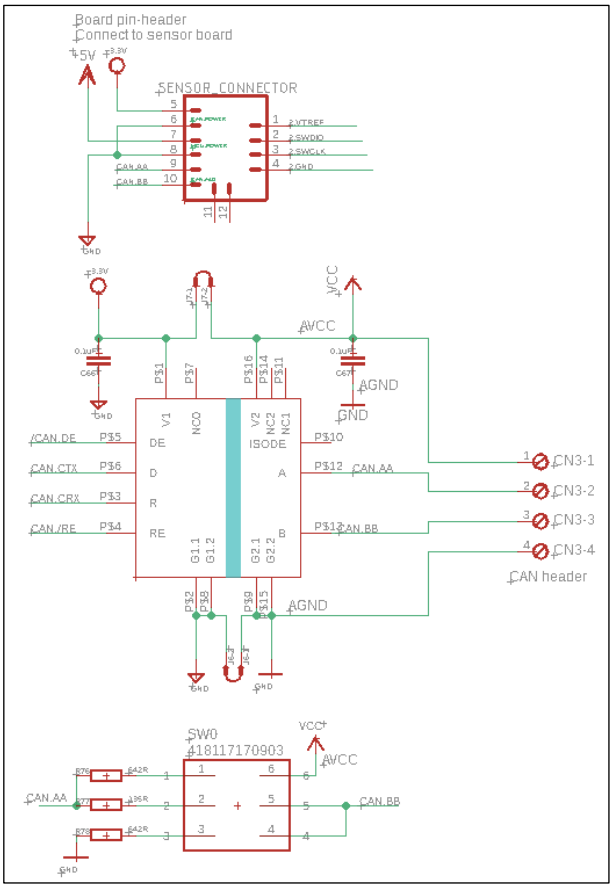

Figure 4-9 RA4M1 Monitor EVB/CAN Transceiver Circuit

C. JLINK Debugging Target Selection

- In Figure 4-10, when Pin1/2 of J21~J24 are short-circuited, the debugging target is RA4M1 Monitor EVB.
- In Figure 4-10, when Pin1/2 of J21~J24 are open, the debugging target is RA2L1 CAN Sensor EVB.

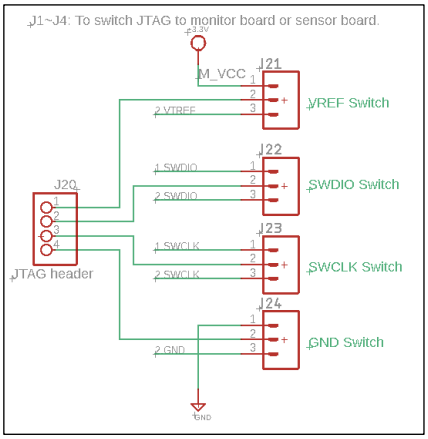

Figure 4-10 JLINK Debugging Target Selection Circuit

D. LDO Voltage Regulation Circuit

- Input: From USB/V+.
- Output: Provides 3.3V to RA4M1 MCU and ISL32743 Transceiver.

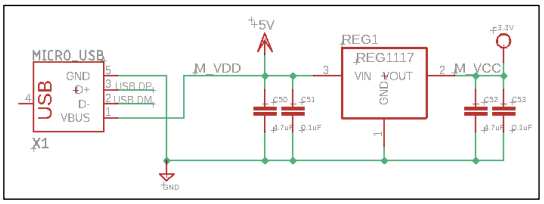

Figure 4-11 RA4M1 Monitor EVB/Voltage Regulation Circuit

5. Operation Guide

Since the EVB adopts isolated CAN BUS transceiver, when more than 2 RA2L1 CAN sensor EVBs are connected on CAN BUS, one RA2L1 CAN sensor EVB is required to provide the isolated side power V2 / G2 of ISL32743 (see Figure 4-5). This board must be combined with RA4M1 monitor EVB. Through the power supply of RA4M1 monitor EVB, the isolated side power supply V2 / G2 of all ISL32743 on the bus is provided. The set of boards (RA2L1 CAN sensor EVB + RA4M1 monitor EVB) providing isolated side power supply is the host. The remaining RA2L1 CAN sensor EVB without isolated side power supply is slave.

5.1 Slave Connection

AC/DC converter powers for slave board. The 2 pins in the middle of “MONITOR_CONNECTOR2” are connected with the pins 5V/GND by jumper cap shown in the yellow box in Figure 5-1.

Note: Avoid touching the board when AC power is supplied.

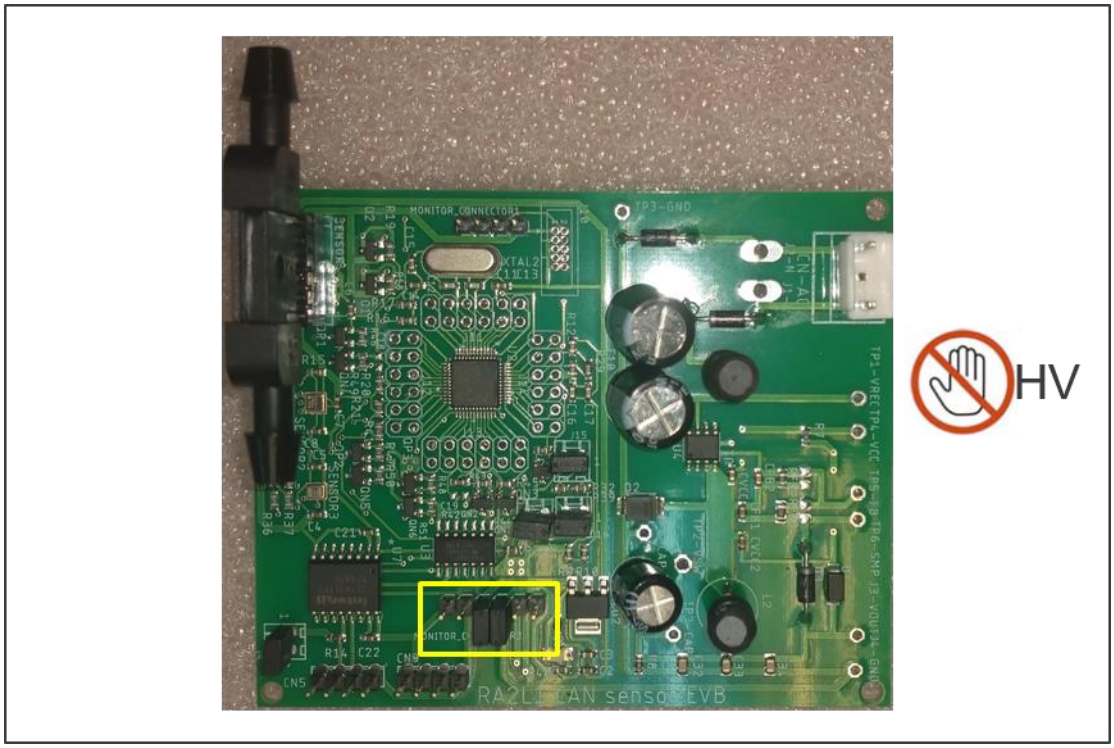

Figure 5-1 Slave board configuration

5.2 Host connection

A. Remove the two jumper caps in the middle of “MONITOR_CONNECTOR2” in RA2L1 CAN sensor EVB.

B. Plug in RA4M1 monitor EVB on RA2L1 CAN sensor EVB by MONITOR_CONNECTOR shown as Figure 5-2.

C. Connect J6~J7 P1/P2 on RA4M1 monitor EVB shown as the yellow box in Figure 5-2.

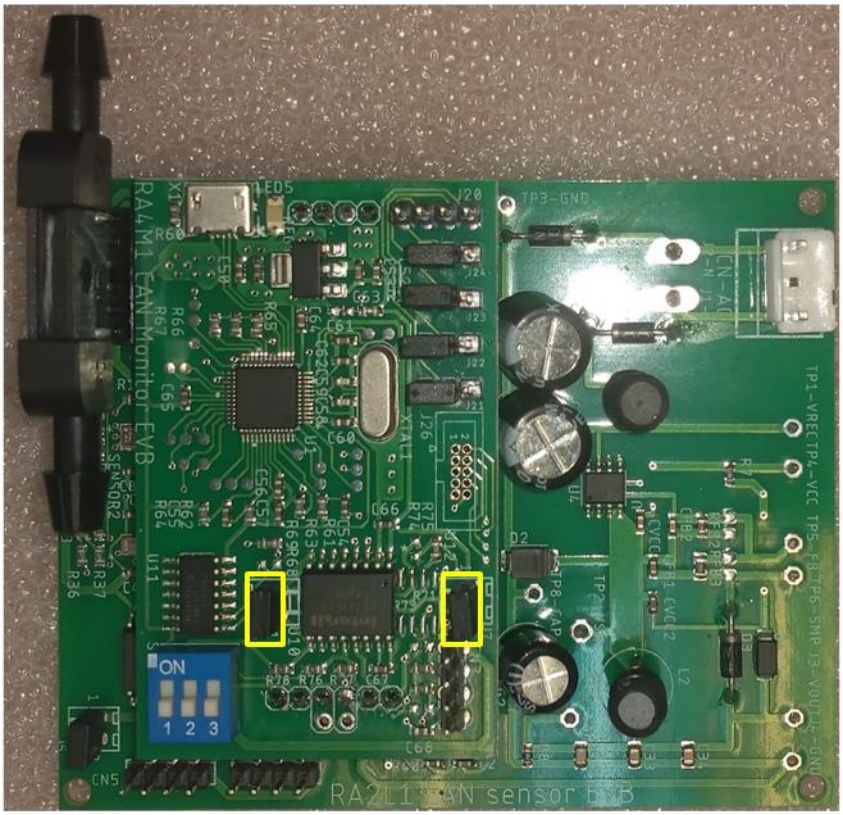

Figure 5-2 Host board configuration

5.3 Host/Slave system connection

1 Host and 2 Slave are connected as Figure 5-3:

A. Host is connected with PC by the USB port in RA4M1 monitor EVB. The isolated side V2/G2 of ISL32743 on all slave boards are powered by USB port.

B. The tow slave boards are powered by AC/DC converter.

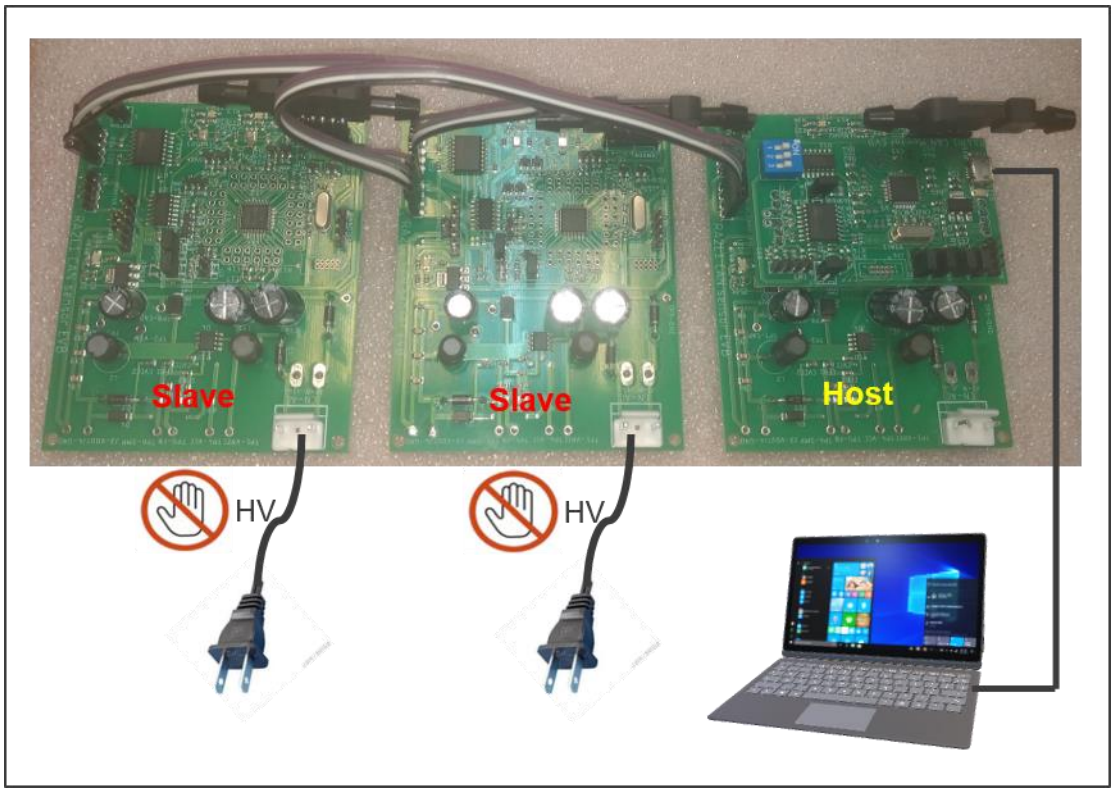

Figure 5-3 Host/Slave System Connection

6. Default Firmware Description

■ RA2L1 CAN sensor EVB default firmware

● File name: demoRaCanSensor.srec_

● Functions:

・CAN bus data transmit/receive

・AES encryption/decryption

・RGB LED control

● Read the flow data of flow sensor FS2012, gas data of gas sensor ZMOD4401 and the data of Humidity/Temperature sensor HS3001. The transmitting data is encrypted or not according to the setting of the board. If so, the encrypted data of each sensor is transmitted by CAN bus. If not, the decrypted data of each sensor will be transmitted, and the decrypted data transmitted by other boards will be received, Light up the LED signal on the board, such as table 6-2.

● Operation

・RGB LED functions:

Each board has three LEDs, corresponding to the status display of three sensors on the board. The corresponding sensors and functions are shown in Table 6-1:

No.	Sensor	Sensing Function
LED1	Flow sensor - FS2012	Liquid/Gas
LED2	Gas Sensor - ZMOD4410	Air Quality
LED3	Humidity/Temperature-HS3001	Humidity/Temperature

Table 6-1 The Relationship between LED and sensor

・ RGB LED status:

According to whether the data is encrypted or not, and the status of each board sensor, the corresponding display color of LED is shown in Table 6.2”

Encrypt set	Normal	The board abnormal	The other boards abnormal
Encrypt	Green	Red	**Yellow green**
Decrypt	Blue	Red	Purple

Table 6-2 The Relationship between LED color and sensor status

- Encrypt/Decrypt setting:

Set whether the board needs to encrypt or decrypt data through J17. If the data needs to be encrypted, connect J17 with jumper cap. If the data does not need to be encrypted or decrypted, remove the jumper cap of J17 as shown in table 6-3

J17	Encrypt/Decrypt setting
Connection	Encrypt
Not connection	Decrypt

Table 6-3 Encrypt/Decrypt setting

- Board address setting:

In this demo kit, each RA2L1 CAN sensor EVB has to set different board number. The board number can be set through J15 and J16, as shown in table 6-

Board address	J15	J16
0x01	Not connection	Not connection
0x02	Connection	Not connection
0x03	Connection	Connection

Table 6-4 Board address setting

- CAN BUS connection:

CN5 and CN9 on RA2L1 CAN sensor EVB board are CAN bus transmission interface. Through these two groups of interfaces, data can be transmitted with other RA2L1 CAN sensor EVB.

7, Circuit Diagram

- RA2L1 CAN sensor EVB

  RA2L1 CAN sensor EVB 1/5

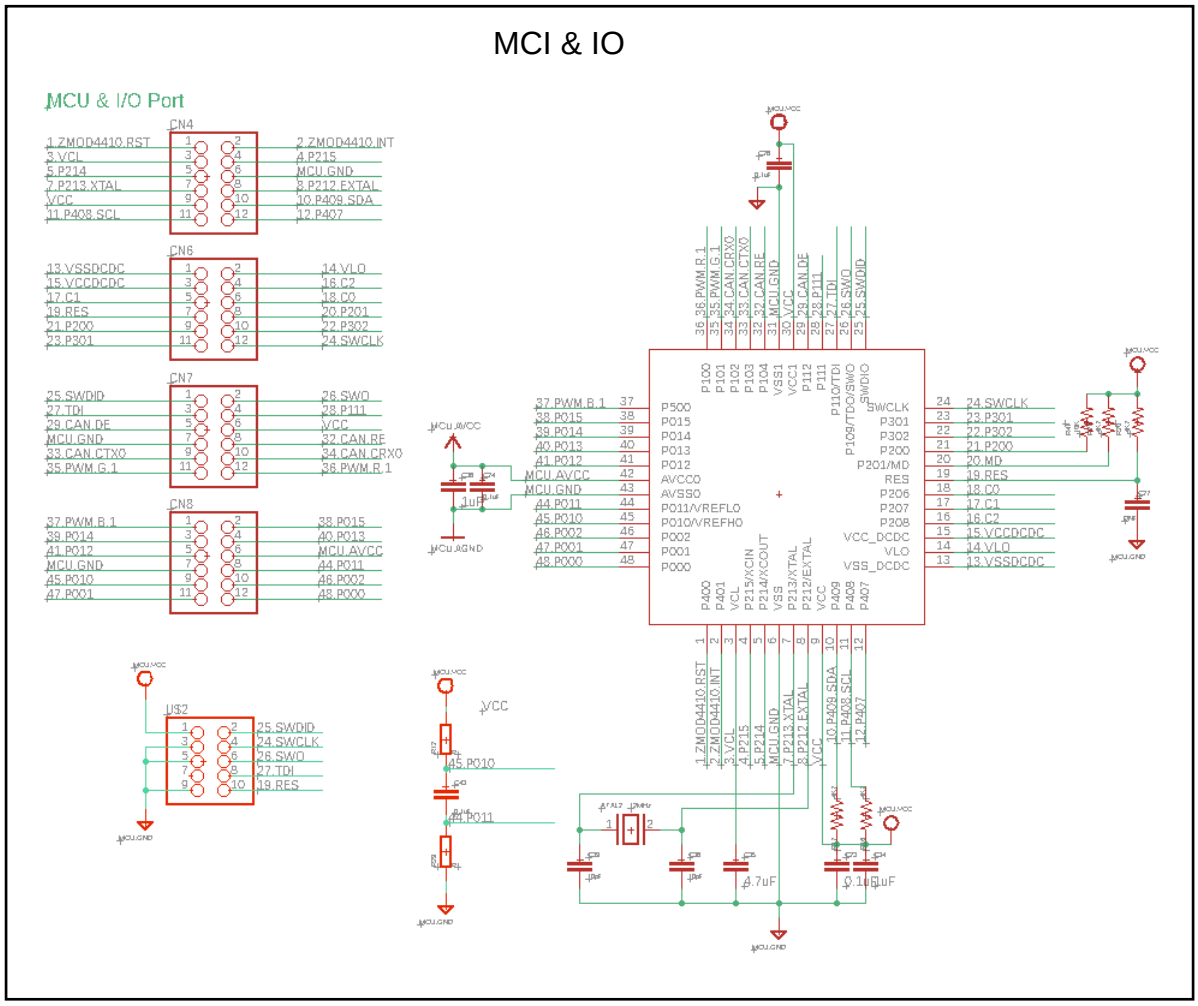

- RA2L1 CAN sensor EVB 2/5

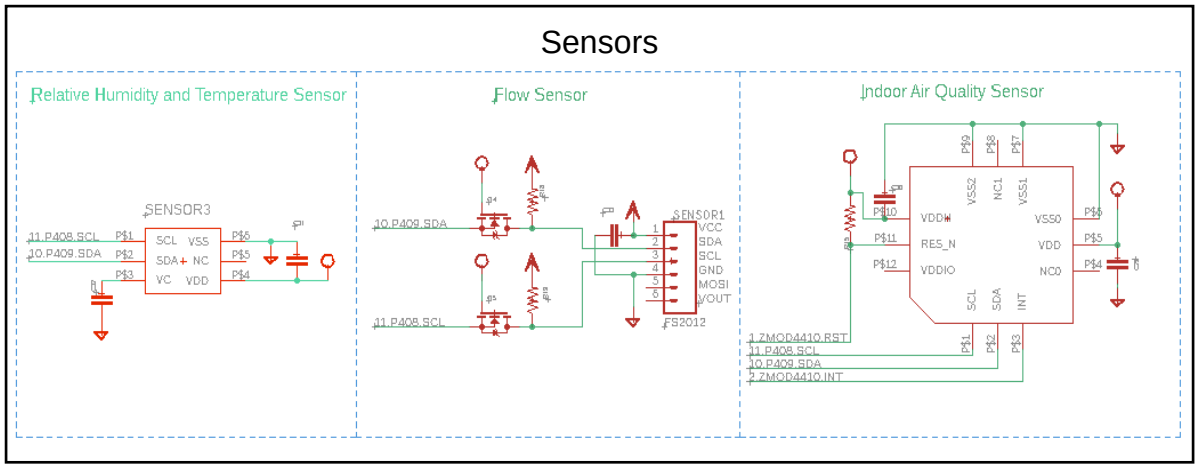

■ RA2L1 CAN sensor EVB 3/5

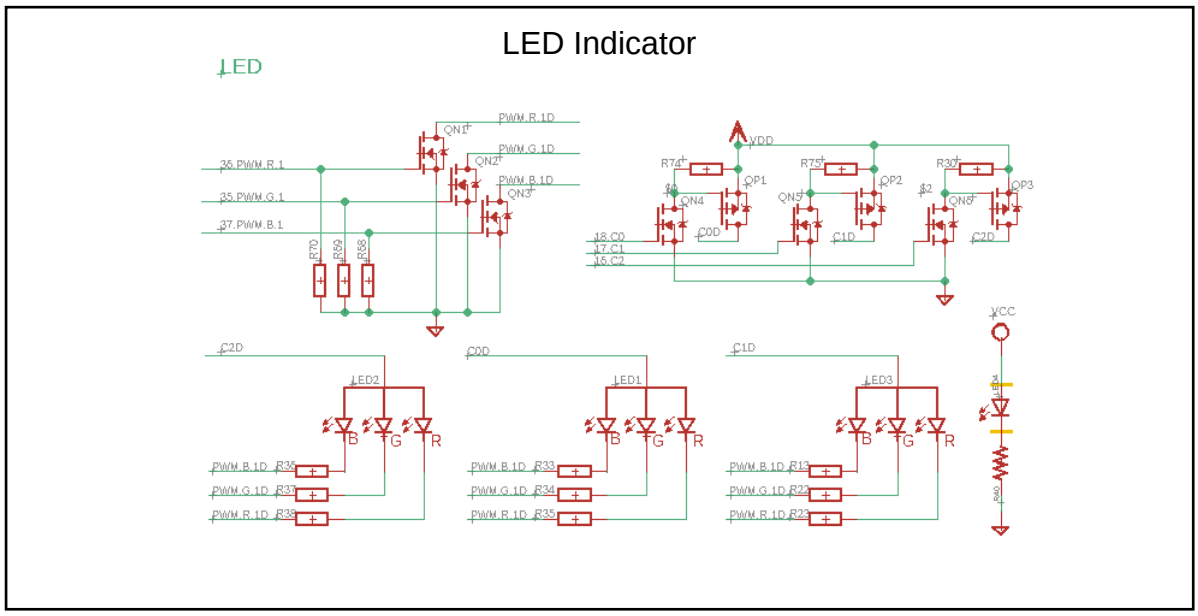

■ RA2L1 CAN sensor EVB 4/5

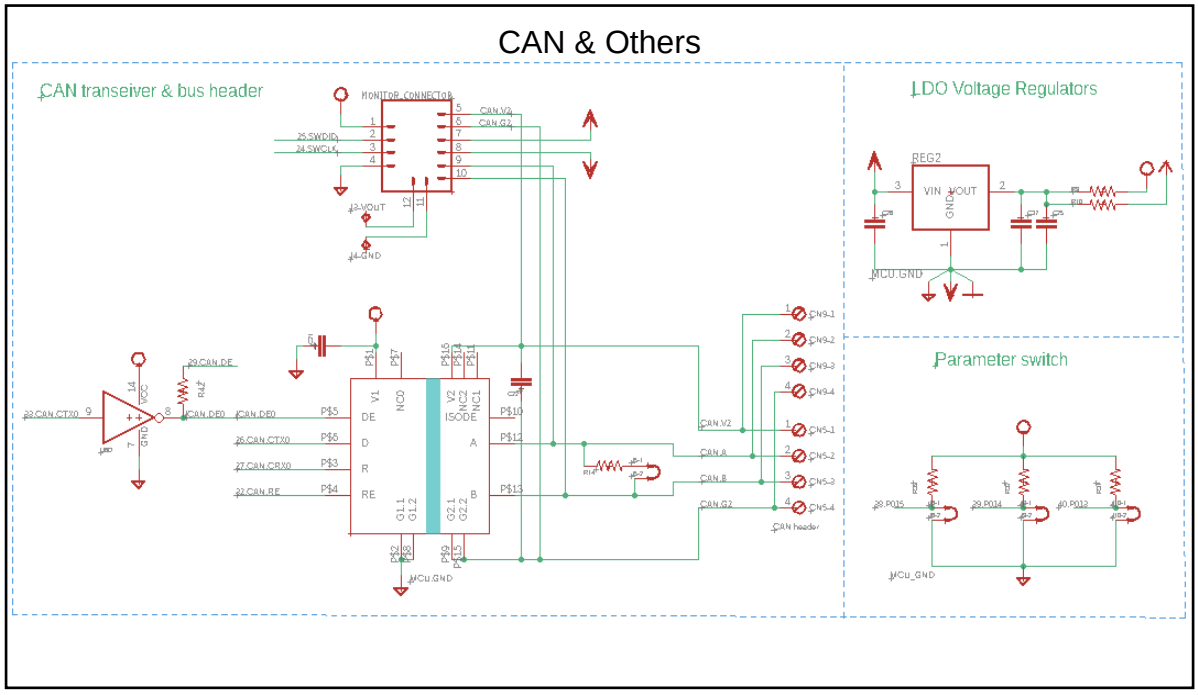

■ RA2L1 CAN sensor EVB 5/5

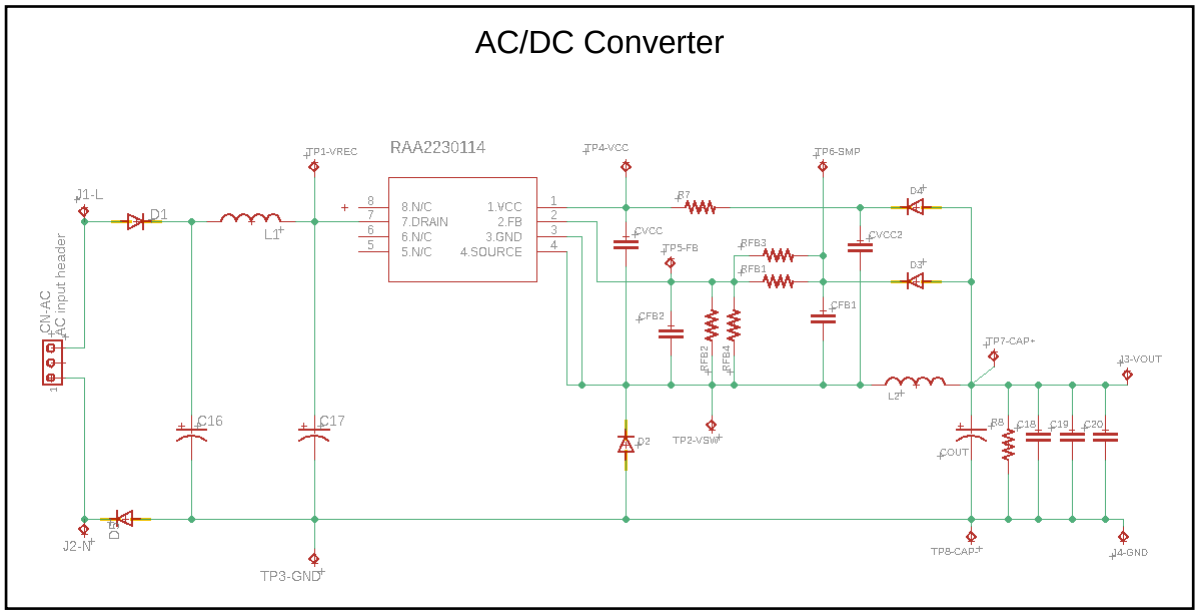

■ RA4M1 monitor EVB
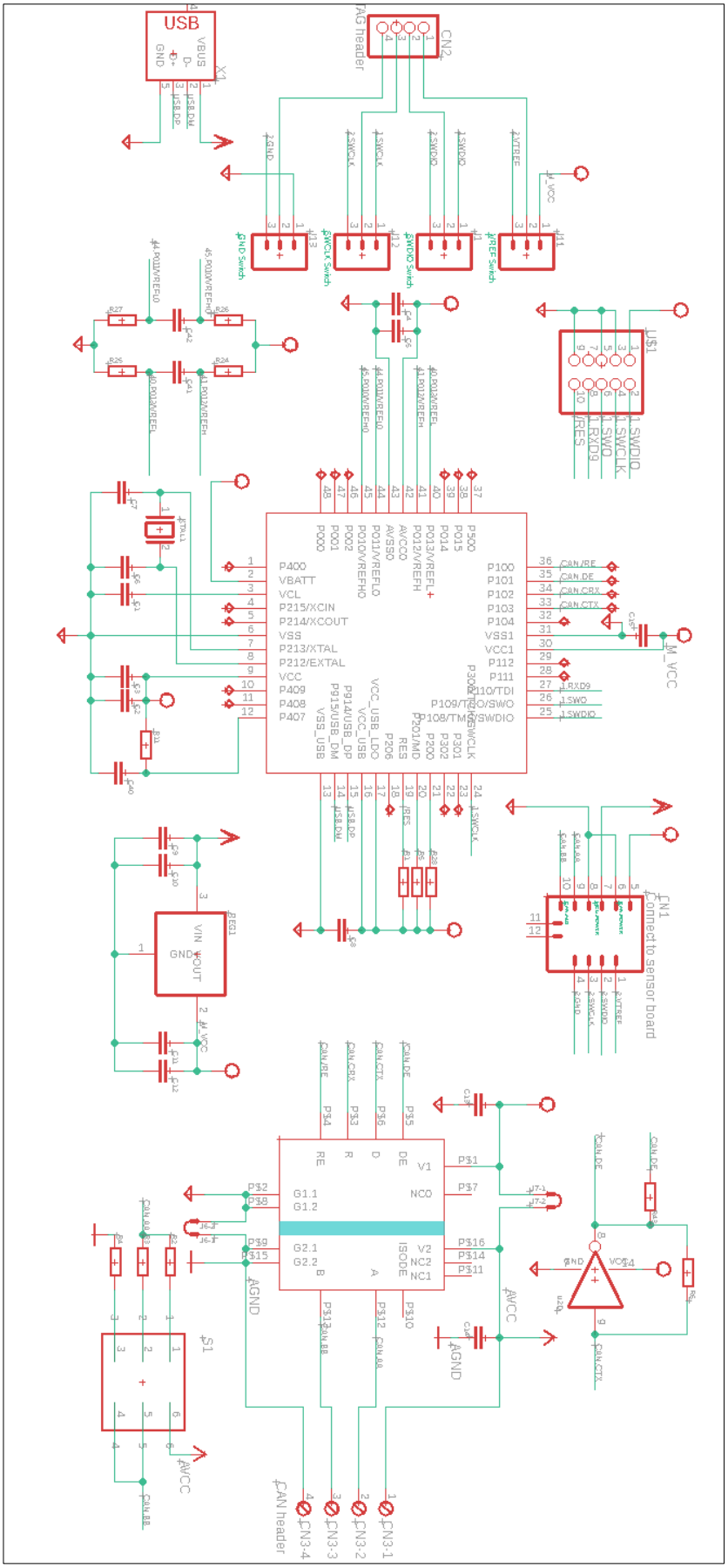
RA4M1 monitor EVB 1/2