User's Manual

RA4W1 Group

Evaluation Kit for RA4W1 Microcontroller Group
EK-RA4W1
User's Manual

Renesas RA Family
RA4 Series

All information contained in these materials, including products and product specifications, represents information on the product at the time of publication and is subject to change by Renesas Electronics Corp. without notice. Please review the latest information published by Renesas Electronics Corp. through various means, including the Renesas Electronics Corp. website (http://www.renesas.com).

Renesas Electronics
www.renesas.com

Rev. 1.10 Jun 2021

Notice

1. Descriptions of circuits, software and other related information in this document are provided only to illustrate the operation of semiconductor products and application examples. You are fully responsible for the incorporation or any other use of the circuits, software, and information in the design of your product or system. Renesas Electronics disclaims any and all liability for any losses and damages incurred by you or third parties arising from the use of these circuits, software, or information.
2. Renesas Electronics hereby expressly disclaims any warranties against and liability for infringement or any other claims involving patents, copyrights, or other intellectual property rights of third parties, by or arising from the use of Renesas Electronics products or technical information described in this document, including but not limited to, the product data, drawings, charts, programs, algorithms, and application examples.
3. No license, express, implied or otherwise, is granted hereby under any patents, copyrights or other intellectual property rights of Renesas Electronics or others.
4. You shall not alter, modify, copy, or reverse engineer any Renesas Electronics product, whether in whole or in part. Renesas Electronics disclaims any and all liability for any losses or damages incurred by you or third parties arising from such alteration, modification, copying or reverse engineering.
5. Renesas Electronics products are classified according to the following two quality grades: “Standard” and “High Quality”. The intended applications for each Renesas Electronics product depends on the product’s quality grade, as indicated below.
   "Standard": Computers; office equipment; communications equipment; test and measurement equipment; audio and visual equipment; home electronic appliances; machine tools; personal electronic equipment; industrial robots; etc.
   "High Quality": Transportation equipment (automobiles, trains, ships, etc.); traffic control (traffic lights); large-scale communication equipment; key financial terminal systems; safety control equipment; etc.
   Unless expressly designated as a high reliability product or a product for harsh environments in a Renesas Electronics data sheet or other Renesas Electronics document, Renesas Electronics products are not intended or authorized for use in products or systems that may pose a direct threat to human life or bodily injury (artificial life support devices or systems; surgical implantations; etc.), or may cause serious property damage (space system; undersea repeaters; nuclear power control systems; aircraft control systems; key plant systems; military equipment; etc.). Renesas Electronics disclaims any and all liability for any damages or losses incurred by you or any third parties arising from the use of any Renesas Electronics product that is inconsistent with any Renesas Electronics data sheet, user’s manual or other Renesas Electronics document.
6. When using Renesas Electronics products, refer to the latest product information (data sheets, user’s manuals, application notes, “General Notes for Handling and Using Semiconductor Devices” in the reliability handbook, etc.), and ensure that usage conditions are within the ranges specified by Renesas Electronics with respect to maximum ratings, operating power supply voltage range, heat dissipation characteristics, installation, etc. Renesas Electronics disclaims any and all liability for any malfunctions, failure or accident arising out of the use of Renesas Electronics products outside of such specified ranges.
7. Although Renesas Electronics endeavors to improve the quality and reliability of Renesas Electronics products, semiconductor products have specific characteristics, such as the occurrence of failure at a certain rate and malfunctions under certain use conditions. Unless designated as a high reliability product or a product for harsh environments in a Renesas Electronics data sheet or other Renesas Electronics document, Renesas Electronics products are not subject to radiation resistance design. You are responsible for implementing safety measures to guard against the possibility of bodily injury, injury or damage caused by fire, and/or danger to the public in the event of a failure or malfunction of Renesas Electronics products, such as safety design for hardware and software, including but not limited to redundancy, fire control and malfunction prevention, appropriate treatment for aging degradation or any other appropriate measures. Because the evaluation of microcomputer software alone is very difficult and impractical, you are responsible for evaluating the safety of the final products or systems manufactured by you.
8. Please contact a Renesas Electronics sales office for details as to environmental matters such as the environmental compatibility of each Renesas Electronics product. You are responsible for carefully and sufficiently investigating applicable laws and regulations that regulate the inclusion or use of controlled substances, including without limitation, the EU RoHS Directive, and using Renesas Electronics products in compliance with all these applicable laws and regulations. Renesas Electronics disclaims any and all liability for damages or losses occurring as a result of your noncompliance with applicable laws and regulations.
9. Renesas Electronics products and technologies shall not be used for or incorporated into any products or systems whose manufacture, use, or sale is prohibited under any applicable domestic or foreign laws or regulations. You shall comply with any applicable export control laws and regulations promulgated and administered by the governments of any countries asserting jurisdiction over the parties or transactions.
10. It is the responsibility of the buyer or distributor of Renesas Electronics products, or any other party who distributes, disposes of, or otherwise sells or transfers the product to a third party, to notify such third party in advance of the contents and conditions set forth in this document.
11. This document shall not be reprinted, reproduced or duplicated in any form, in whole or in part, without prior written consent of Renesas Electronics.
12. Please contact a Renesas Electronics sales office if you have any questions regarding the information contained in this document or Renesas Electronics products.

(Note1) “Renesas Electronics” as used in this document means Renesas Electronics Corporation and also includes its directly or indirectly controlled subsidiaries.
(Note2) “Renesas Electronics product(s)” means any product developed or manufactured by or for Renesas Electronics.

(Rev.4.0-1 November 2017)

Corporate Headquarters

TOYOSU FORESIA, 3-2-24 Toyosu,
Koto-ku, Tokyo 135-0061, Japan
www.renesas.com

Trademarks

Renesas and the Renesas logo are trademarks of Renesas Electronics Corporation. All trademarks and registered trademarks are the property of their respective owners.

Contact information

For further information on a product, technology, the most up-to-date version of a document, or your nearest sales office, please visit: www.renesas.com/contact/.

© 2021 Renesas Electronics Corporation. All rights reserved.

Renesas EK-RA4W1 Disclaimer

By using this EK-RA4W1, the User accepts the following terms, which are in addition to, and control in the event of disagreement, with Renesas' General Terms and Conditions available at https://www.renesas.com/en-us/legal/disclaimer.html.

The EK-RA4W1 is not guaranteed to be error free, and the entire risk as to the results and performance of the EK-RA4W1 is assumed by the User. The EK-RA4W1 is provided by Renesas on an "as is" basis without warranty of any kind whether express or implied, including but not limited to the implied warranties of good workmanship, fitness for a particular purpose, title, merchantability, and non-infringement of intellectual property rights. Renesas expressly disclaims any implied warranty.

Renesas does not consider the EK-RA4W1 to be a finished product and therefore the EK-RA4W1 may not comply with some requirements applicable to finished products, including, but not limited to recycling, restricted substances and electromagnetic compatibility regulations. Refer to Certifications section, for information about certifications and compliance information for the EK-RA4W1. It is the kit User's responsibility to make sure the kit meets any local requirements applicable to their region.

Renesas or its affiliates shall in no event be liable for any loss of profit, loss of data, loss of contract, loss of business, damage to reputation or goodwill, any economic loss, any reprogramming or recall costs (whether the foregoing losses are direct or indirect) nor shall Renesas or its affiliates be liable for any other direct or indirect special, incidental or consequential damages arising out of or in relation to the use of this EK-RA4W1, even if Renesas or its affiliates have been advised of the possibility of such damages.

Renesas has used reasonable care in preparing the information included in this document, but Renesas does not warrant that such information is error free nor does Renesas guarantee an exact match for every application or parameter to part numbers designated by other vendors listed herein. The information provided in this document is intended solely to enable the use of Renesas products. No express or implied license to any intellectual property right is granted by this document or in connection with the sale of Renesas products. Renesas reserves the right to make changes to specifications and product descriptions at any time without notice. Renesas assumes no liability for any damages incurred by you resulting from errors in or omissions from the information included herein. Renesas cannot verify, and assumes no liability for, the accuracy of information available on another company's website.

Precautions

This Evaluation Kit is only intended for use in a laboratory environment under ambient temperature and humidity conditions. A safe separation distance should be used between this and any sensitive equipment. Its use outside the laboratory, classroom, study area, or similar such area invalidates conformity with the protection requirements of the Electromagnetic Compatibility Directive and could lead to prosecution.

The product generates, uses, and can radiate radio frequency energy and may cause harmful interference to radio communications. There is no guarantee that interference will not occur in a particular installation. If this equipment causes harmful interference to radio or television reception, which can be determined by turning the equipment off or on, you are encouraged to try to correct the interference by one or more of the following measures:

• Ensure attached cables do not lie across the equipment.

• Reorient the receiving antenna.

• Increase the distance between the equipment and the receiver.

• Connect the equipment into an outlet on a circuit different from that which the receiver is connected.

• Power down the equipment when not in use.

• Consult the dealer or an experienced radio/TV technician for help.

Note: It is recommended that wherever possible shielded interface cables are used.

The product is potentially susceptible to certain EMC phenomena. To mitigate against them it is recommended that the following measures be undertaken:

• The user is advised that mobile phones should not be used within 10 m of the product when in use.

• The user is advised to take ESD precautions when handling the equipment.

The Evaluation Kit does not represent an ideal reference design for an end product and does not fulfill the regulatory standards for an end product.

Renesas RA Family

EK-RA4W1

Contents

1. Kit Overview 3
1.1 Assumptions and Advisory Notes 5
2. Kit Connection 6
3. Ordering Information 6
4. Hardware Architecture and Default Configuration 7
4.1 Kit Architecture 7
4.2 Parts Layout 7
5. Board Areas and User Circuits 8
5.1 Evaluation MCU 8
5.2 Bluetooth® Low Energy (BLE) Circuit 8
5.3 Emulator 9
5.4 USB-to-Serial Conversion 10
5.5 ACT LED 10
5.6 Power LED 10
5.7 User LED 11
5.8 External Power Supply Header 11
5.9 Pmod™ Connector 13
5.10 Arduino™ UNO Headers 14
5.11 Current Measurement Header 15
5.12 MCU Headers 15
5.13 Reset Switch 15
5.14 User Switch 16
5.15 Patterns for Cutting 16
6. Configurations 16
6.1 Configuring the EK-RA4W1 16
6.2 Analog Power Supply 16
6.3 On-Chip Oscillator 17
7. Handling Precautions 18
7.1 Adding Load 18
7.2 Modifying the Board 18
8. Certifications 19
8.1 Radio-Related Laws 19

9. Design and Manufacturing Information 20

10. Website and Support 20

Revision History 21

Figures

Figure 1. EK-RA4W1 Top Side 4
Figure 2. EK-RA4W1 Bottom Side 5
Figure 3. EK-RA4W1 Kit Contents 6
Figure 4. EK-RA4W1 Board Block Diagram 7
Figure 5. Parts Layout 7
Figure 6. Evaluation MCU 8
Figure 7. BLE Circuit 8
Figure 8. Emulator Reset Switch (ESW1) 9
Figure 9. Displays Indicating Installation of the USB Driver 10
Figure 10. ACT LED on EK-RA4W1 board 10
Figure 11. Power LED on EK-RA4W1 board 10
Figure 12. Position of the Pattern for Cutting (SS19) (Soldered Side) 11
Figure 13. Position of the External Power-Supply Header (J6) (Top Side) 12
Figure 14. Pin Assignments of the Pmod™ Connector (Top View) 13
Figure 15. Positions of the Current Measurement Header (J7) and Pattern for Cutting (SS20) (Soldered Side) 15
Figure 16. Reset Switch on EK-RA4W1 board 15
Figure 17. User Switch on EK-RA4W1 board 16
Figure 18. Examples of States of Patterns for Cutting 16

Tables

Table 1. Setting of the Emulator Reset Switch (ESW1) 9
Table 2. Names of the USB-to-Serial Signals 10
Table 3. Pin Assignments of the Pmod™ Connector 13
Table 4. Pin Assignments of CN1 (8-Pin Power Connector) 14
Table 5. Pin Assignments of CN2 (6-Pin Analog Connector) 14
Table 6. Pin Assignments of CN3 (10-Pin Digital Connector) 14
Table 7. Pin Assignments of CN4 (8-Pin Digital Connector) 15
Table 8. Option-Link Resistors for the Analog Power Supply of the 14-Bit A/D and 12-Bit D/A Converters16
Table 9. Option-Link Resistors for the Reference Power Supply of the 14-Bit A/D Converter 17
Table 10. Option-Link Resistors for the HOCO 17
Table 11. Option-Link Resistors for the LOCO 17

1. Kit Overview

The EK-RA4W1, Evaluation Kit for RA4W1 MCU Group, enables users to seamlessly evaluate the features of the RA4W1 MCU Group and develop embedded systems applications using Flexible Software Package (FSP) and e^2 studio IDE. The users can utilize rich on-board features along with their choice of popular ecosystems add-ons to bring their big ideas to life.

The specifications of the EK-RA4W1 board are summarized in the following table.

Table 1. EK-RA4W1 Specifications

Item	Specification
Evaluation MCU	Part No.: R7FA4W1AD2CNG
	Package: 56-pin QFN
	On-chip memory: 512-KB ROM, 96-KB RAM, 8-KB data flash memory
Board size	Size: 54.0 mm x 90.0 mm
	Thickness: 1.6 mm
Power-supply voltage	USB connector: 5-V input
	Power-supply IC: 5-V input, 3.3-V output
	External power-supply header*1: 3.3-V input, 2 pins x 1
Current drawn	Max. 200 mA
Current measurement header*1	Header: 2 pins x 1
Main clock*1	Crystal oscillator (surface-mount technology (SMT)) for the main system clock
	Crystal oscillator or ceramic resonator (lead type) for the main system clock
Sub-clock*1	Crystal oscillator (SMT) for the sub-clock
Bluetooth® Low Energy	Bluetooth® Low Energy circuit x 1
	Range of frequency: 2402 to 2480 MHz
	Maximum transmission output power: 4 dBm (in 4-dBm output mode)
	Output variation: +2 dB
Push switches	Reset switch x 1
	User switch x 1
LEDs	Power indicator: green x 1
	User: green x 2
	ACT LED: green x 1
USB	Connector for an on-board emulator: USB Micro-B
	Connector for a USB serial-conversion interface: USB Micro-B
Pmod™ connector	Connector: Angle type, 12 pins
Arduino™ UNO connectors	A set of 2.54-mm pitch connectors for Arduino™ UNO
MCU headers*1	Headers: 28 pins x 2
Emulator reset switch	DIP switch x 1

Note: This part is not mounted.

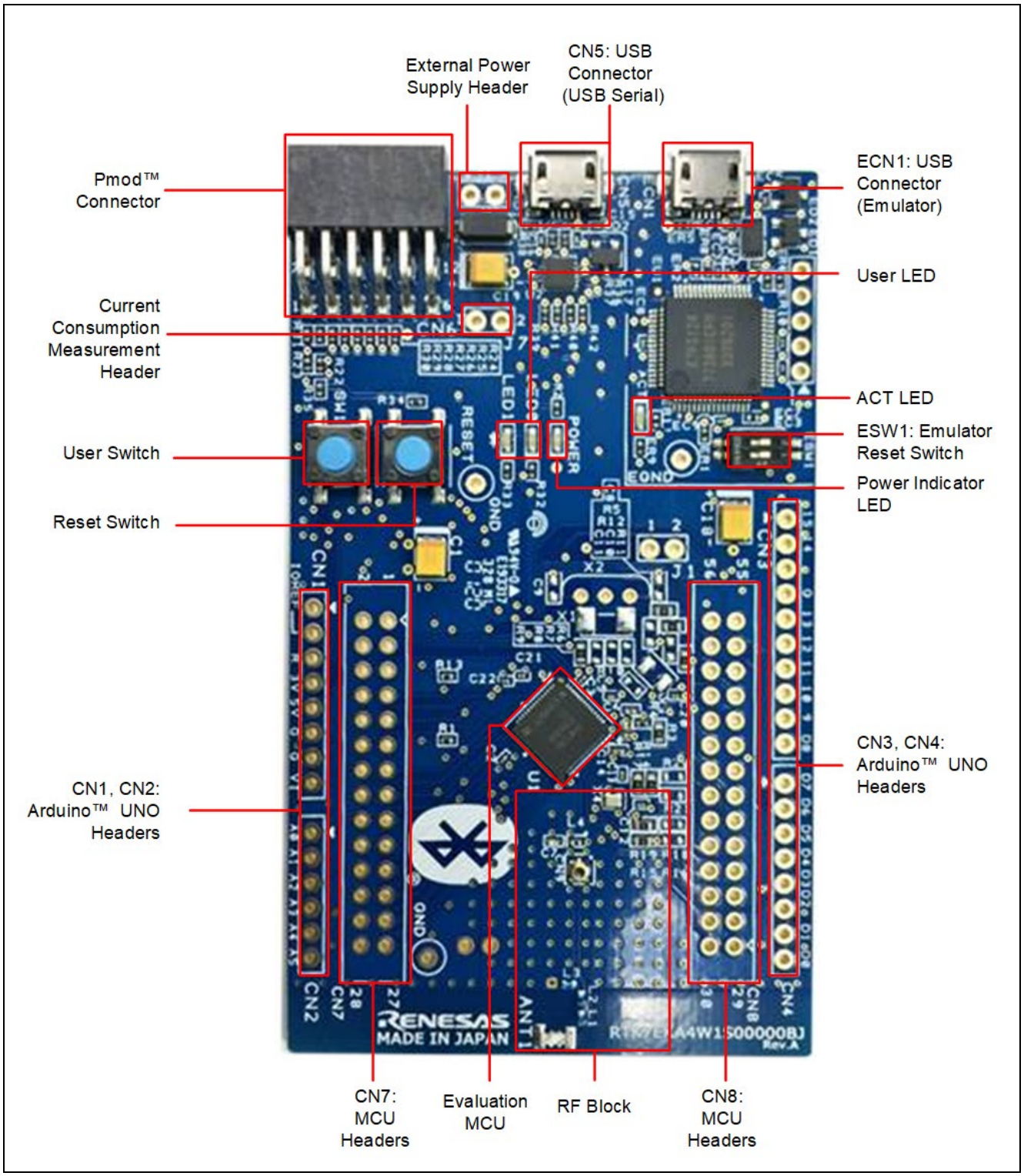

Figure 1. EK-RA4W1 Top Side

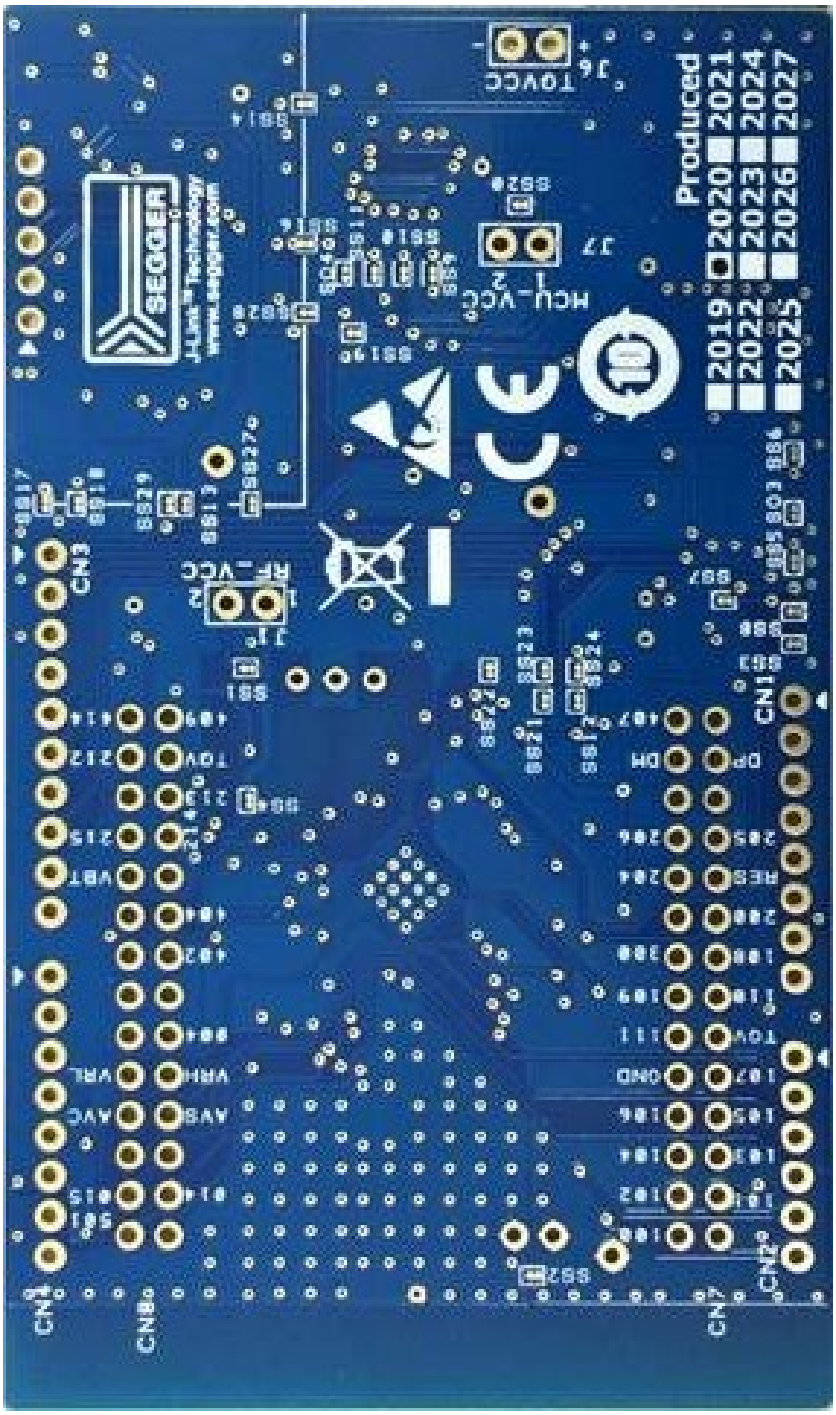
CN1
CN8
CN7
CN2
CN3
CN11
SEGGER
J-Link™ Technology
www.segger.com
Produced
2019 2020 2021
2022 2023 2024
2025 2026 2027
TOVCC
MCU_VCC
RF_VCC
J6
J7
J1
J2
J3
J4
J5
J8
J9
J10
J11
J12
J13
J14
J15
J16
J17
J18
J19
J20
J21
J22
J23
J24
J25
J26
J27
J28
J29
J30
J31
J32
J33
J34
J35
J36
J37
J38
J39
J40
J41
J42
J43
J44
J45
J46
J47

2. Kit Connection

The kit contains the EK-RA4W1 board that is connected to the host PC using a USB cable (not included in the kit). The IDE can be installed from the URL, renesas.com/ra/ek-ra4w1 on to the host PC. The installer automatically installs all the required drivers along with the IDE.

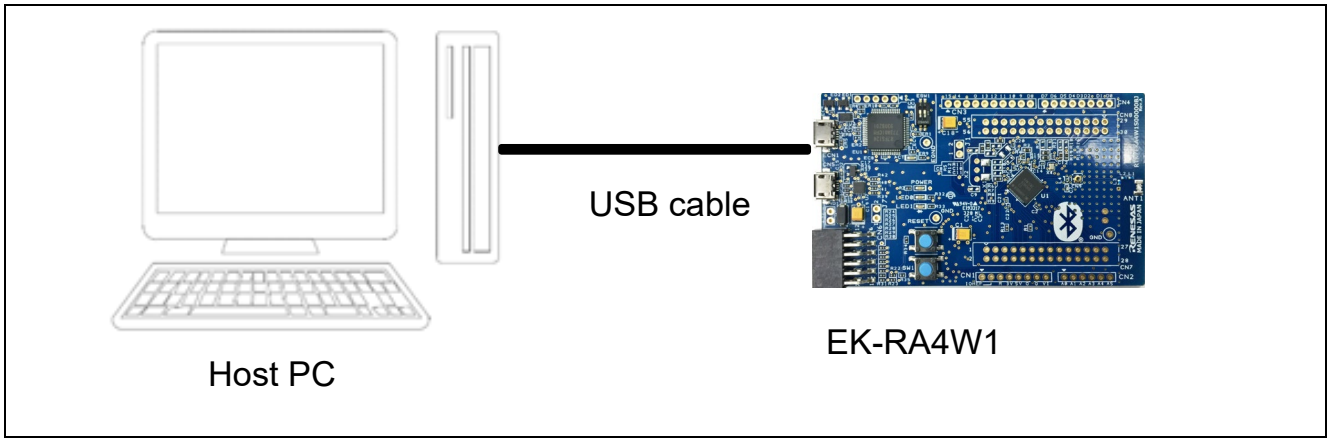

Figure 3. EK-RA4W1 Kit Contents

3. Ordering Information

- EK-RA4W1 kit orderable part number: RTK7EKA4W1S00000BJ
  Note: The underlined character in the orderable part number represents the kit version.
- EK-RA4W1 board dimensions: 54.0 mm (width) x 90.0 mm (length)

4. Hardware Architecture and Default Configuration

4.1 Kit Architecture

This section contains the block diagram and parts layout of the EK-RA4W1 system block diagram.

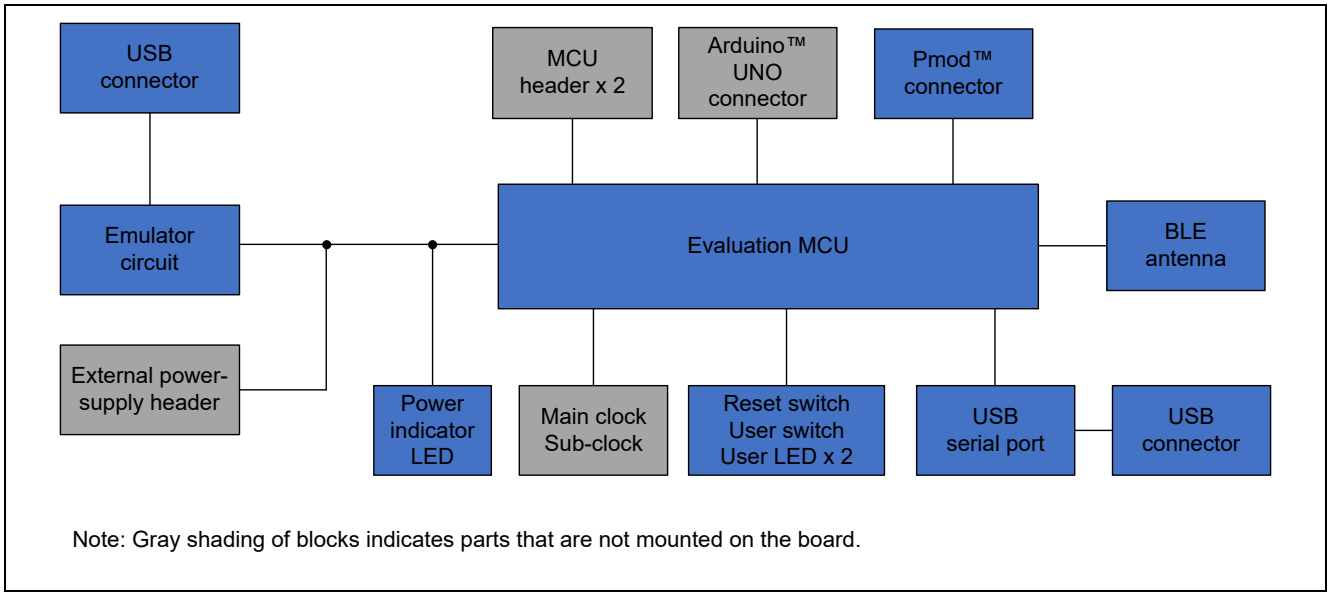

Figure 4. EK-RA4W1 Board Block Diagram

4.2 Parts Layout

Figure 5 shows the parts layout of this product.

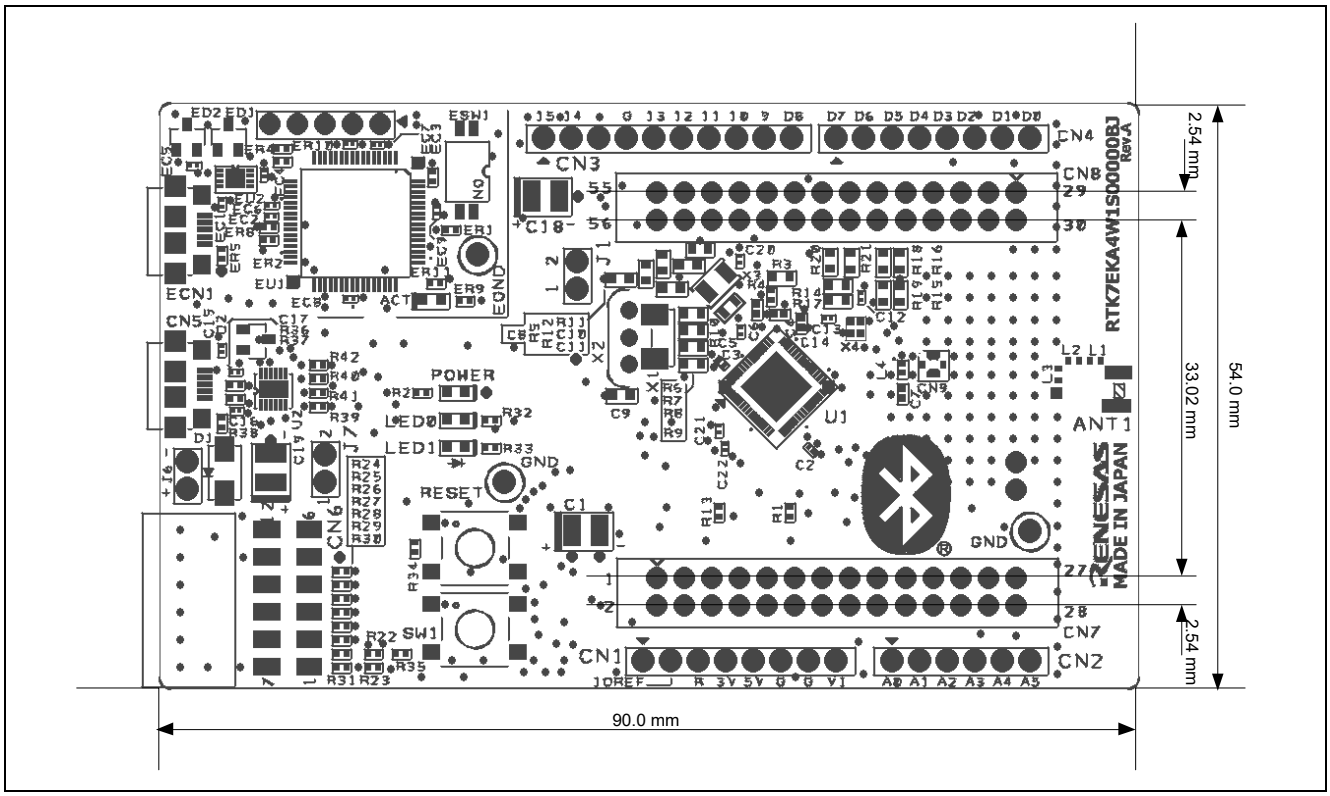

Figure 5. Parts Layout

5. Board Areas and User Circuits

5.1 Evaluation MCU

The MCU specifications for the power supply, system clock, and reset at the time of shipment are as follows:

- Power supply: Fixed 3.3 V (including the analog power supply)
- System clock: Operation with an on-chip oscillator
- Reset: Directed by the reset switch or IDE

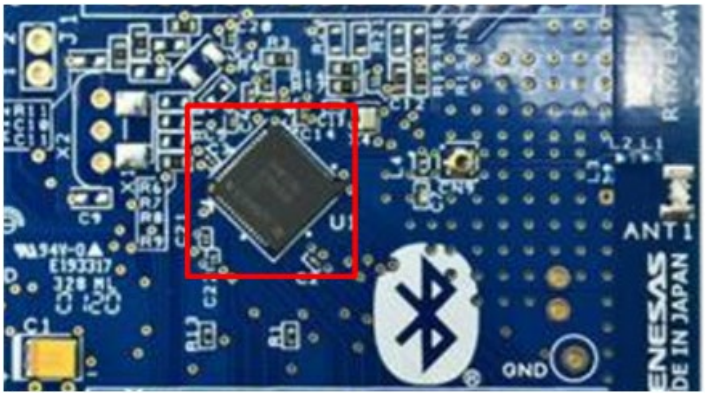

Figure 6. Evaluation MCU

5.2 Bluetooth® Low Energy (BLE) Circuit

The BLE communications circuit is shown in the graphic that follows.

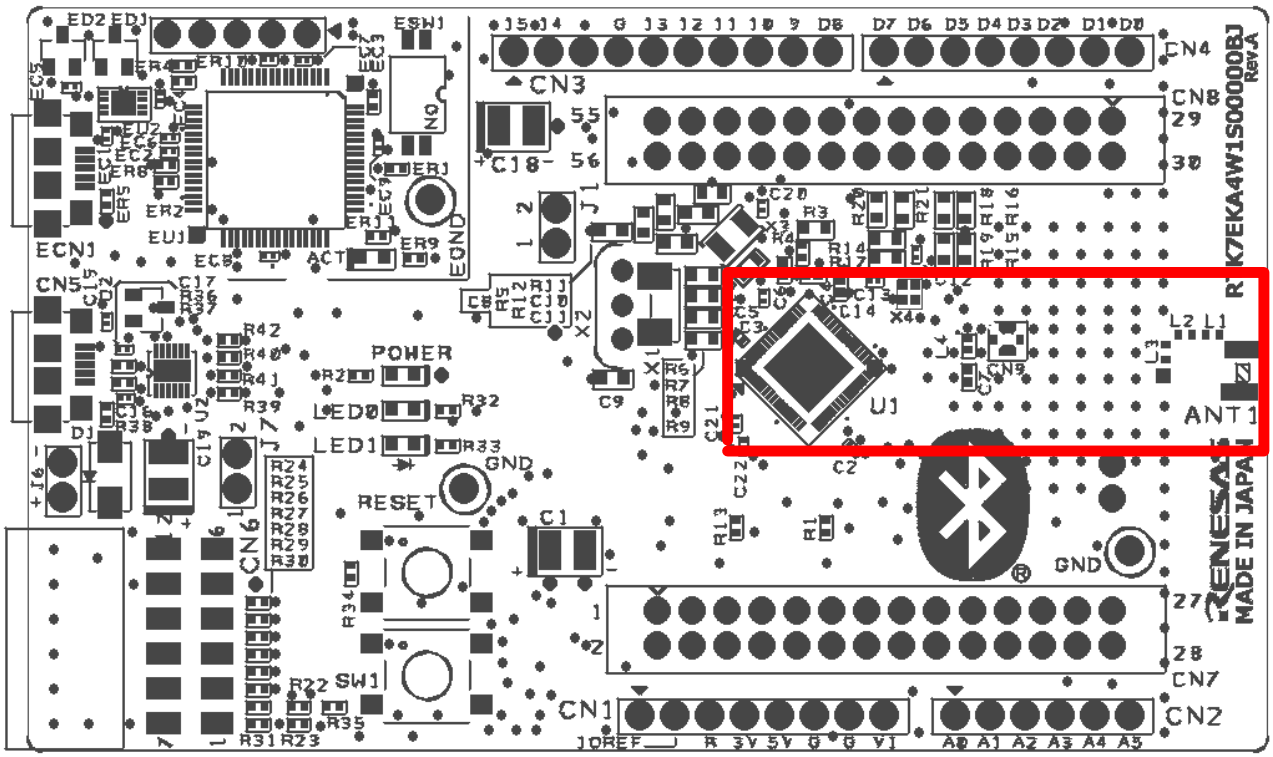

Figure 7. BLE Circuit

Note: Do not remodel the BLE circuit, as doing so violates radio-related laws.

5.3 Emulator

An emulator (J-LINK® OB) is mounted on the board. With the settings as shipped, the switches shown in Figure 8 are turned off and the emulator is in reset state. To use the emulator, make the corresponding switch setting in Table 1.

The shape of the emulator connector (ECN1) is USB micro-B for the IDE and for the Renesas Flash Programmer (RFP). Connect the emulator connector to the computer by a USB cable. If the power supply on the host side is on, the power is supplied to this product at the same time as connection of the cable.

Note: The package does not include a USB cable.

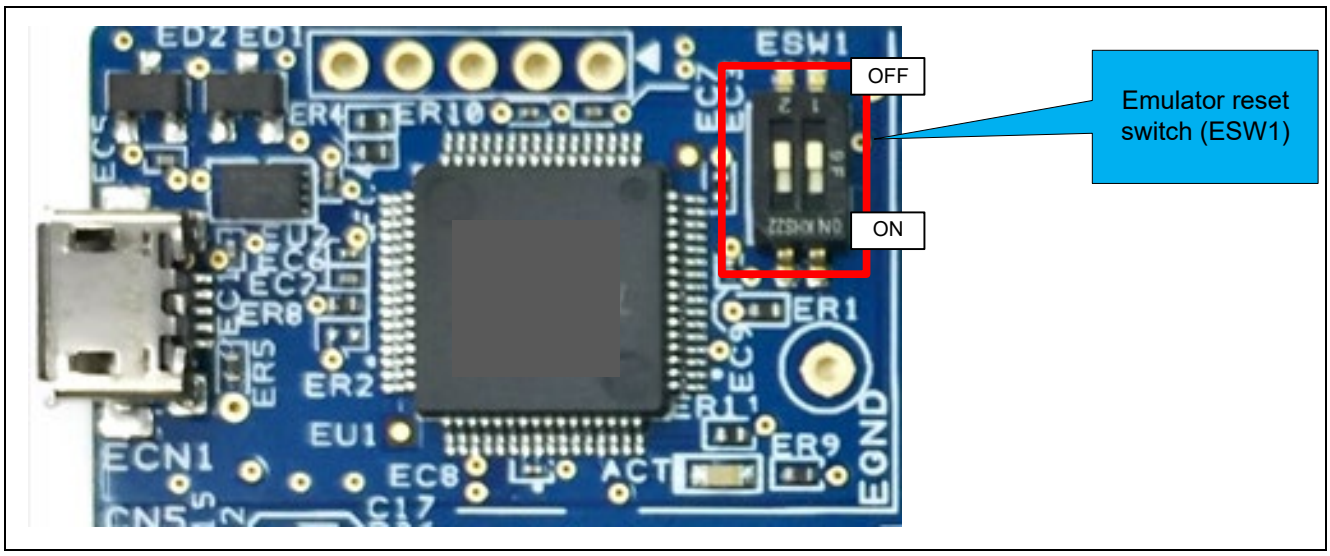

Figure 8. Emulator Reset Switch (ESW1)

Table 1. Setting of the Emulator Reset Switch (ESW1)

ESW1	Function	MCU	
Channel 1	Not used.	—	—
Channel 2	Resets the emulator.	Off	The emulator is reset. The emulator cannot be used.
		On	The emulator can be used.

5.4 USB-to-Serial Conversion

USB connector CN5 is connected to the USB-to-serial conversion module from FTDI and can be used as a virtual COM port. Table 2 shows the connection relationship of USB-to-serial signals.

Table 2. Names of the USB-to-Serial Signals

Signal Name	Function and Usage	MCU	
		Port	Pin
TXD	Signal for transmitting data	P205	8
RXD	Signal for receiving data	P206	7
CTS	Input signal for controlling the start of transmission and reception of data	*1	
RTS	Output signal for controlling the start of transmission and reception of data	*1	

Note: This port is not connected on the board as shipped.

The first time the CPU board is connected to the USB port of a PC, the monitor of the PC shows the message stating that installation of the driver is in progress as shown in Figure 9. After that, a message indicating completion of the driver installation is displayed. The content of the message will differ with the OS version on the host PC.

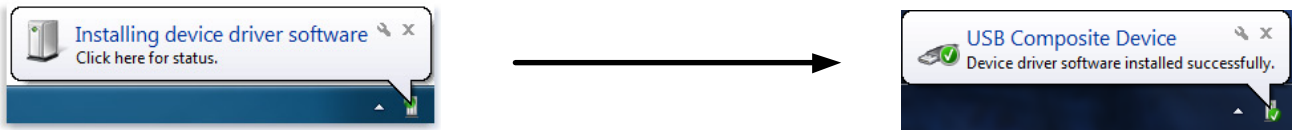

Figure 9. Displays Indicating Installation of the USB Driver

If you do not have a driver, download the installer for the driver from the Web site of FTDI.

5.5 ACT LED

The ACT LED displays the state of operation of the emulator control software. The illumination conditions are listed as follows. The LED is green.

- When the LED is Illuminated, it indicates that the host machine (PC) has recognized the emulator.
- When the LED is not illuminated, the emulator cannot be used for some reason (included its power being off).

Figure 10. ACT LED on EK-RA4W1 Board

5.6 Power LED

While the power LED is illuminated, power is being supplied to the board. The LED is green.

Figure 11. Power LED on EK-RA4W1 Board

5.7 User LED

The optional user LEDs can be used for any purpose. LED0 and LED1 are mounted on the board and are respectively connected to the following ports. The LEDs are green.

- LED0: Pin 21, connected to port P106
- LED1: Pin 46, connected to port P404

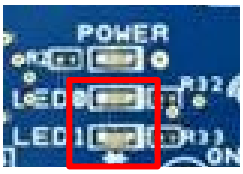

Figure. User LED on EK-RA4W1 Board

5.8 External Power Supply Header

When more current is required than the USB is capable of supplying, use the external power-supply header (J6) to supply power. The usable voltage is 3.3 V. When this header is to be used, remove the pattern for cutting (SS19) on the soldered side, electrically separating the emulator from the target. Figure 12 shows the position of the pattern for cutting. Figure 13 shows the position of the external power-supply header (the actual header component is not mounted on the board as shipped).

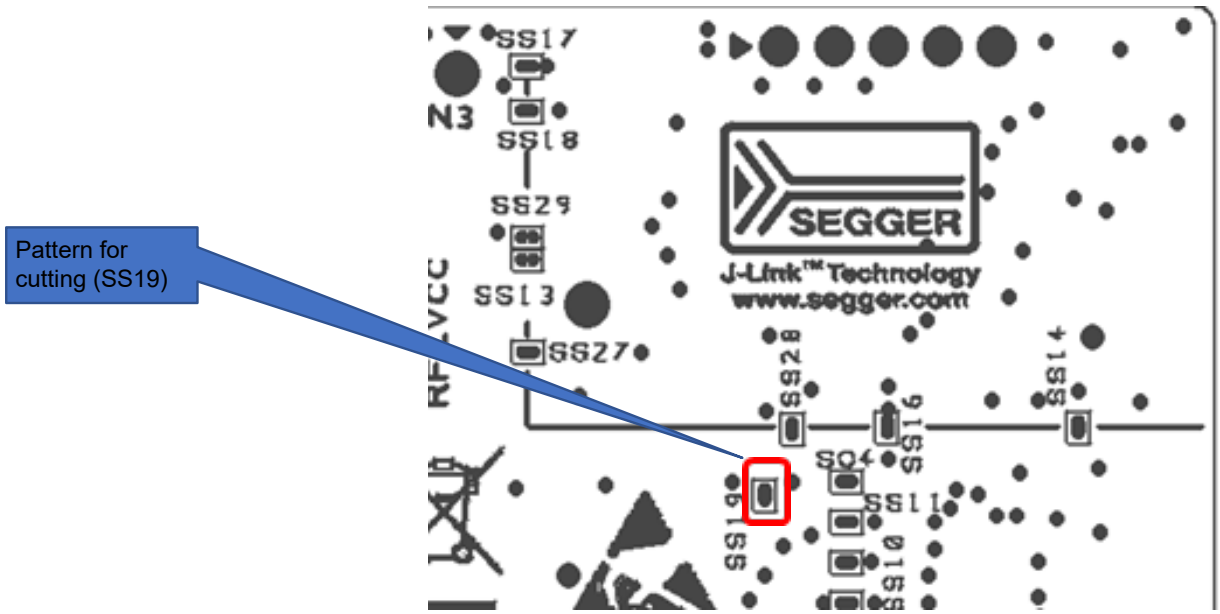

Figure 12. Position of the Pattern for Cutting (SS19) (Soldered Side)

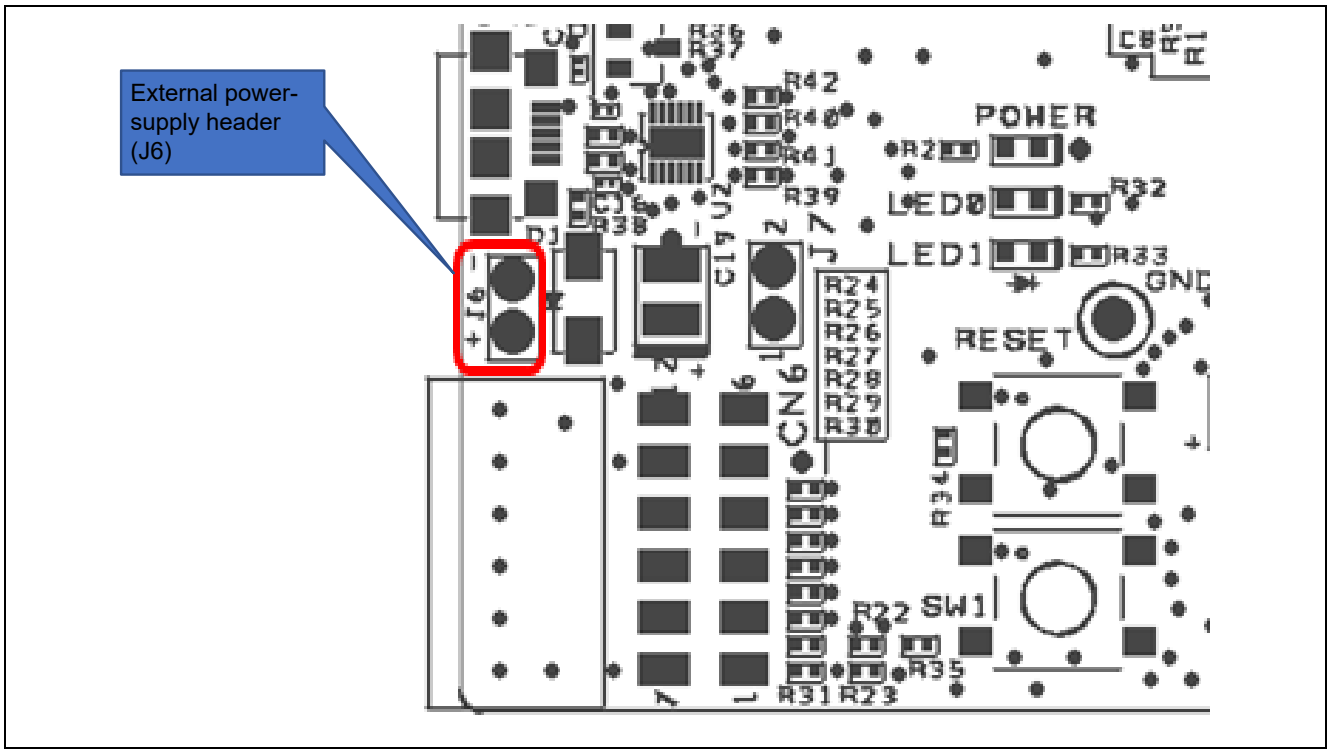

Figure 13. Position of the External Power-Supply Header (J6) (Top Side)

5.9 Pmod™ Connector

A Pmod™ connector (CN6) is connectable to the evaluation MCU via a type 2A Pmod™ interface. Note that the pin assignments of the Pmod™ connector differ from those of other headers.

Figure 14 and Table 3 show the pin assignments of the Pmod™ connector and the specifications of signals on the Pmod™ connector, respectively. The interrupt function is assigned to IRQ1.

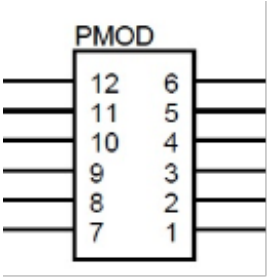

Figure 14. Pin Assignments of the Pmod™ Connector (Top View)

Table 3. Pin Assignments of the Pmod™ Connector

Pin No.	Signal Name	Evaluation MCU		Pin No.	Signal Name	Evaluation MCU	
		Port	Pin			Port	Pin
1	PMOD1-CS	P103	24	7	PMOD1-IRQ	P104	23
2	PMOD1-MOSI	P101	26	8	PMOD1-RST	P107	20
3	PMOD1-MISO	P100	27	9	PMOD1-IO0	P204	9
4	PMOD1-SCK	P102	25	10	PMOD1-IO1	P407	1
5	GROUND	—	—	11	GROUND	—	—
6	TARGET_VCC	—	—	12	TARGET_VCC	—	—

5.10 Arduino™ UNO Headers

For the CN1, CN2, CN3, and CN4 headers, through holes are assigned with a pitch of 2.54 mm and these headers are connected to the evaluation MCU according to the Arduino™ UNO R3 specification. Table 4, Table 5, Table 6, and Table 7 show the signal specifications of the Arduino™ UNO connectors (the actual connector components are not mounted on the board as shipped).

Table 4. Pin Assignments of CN1 (8-Pin Power Connector)

Pin No.	Signal Name	Specification	MCU	
			Signal Name	Pin No.
1	NC	Reserved	—	—
2	IOR	IOREF	VCC	—
3	RES	RESET	RES	10
4	3V3	Power supply	VCC	—
5	5V		—	—
6	GND		GND	—
7	GND		GND	—
8	VIN		VCC	—

Table 5. Pin Assignments of CN2 (6-Pin Analog Connector)

Pin No.	Signal Name	Specification	MCU	
			Signal Name	Pin No.
1	A0	AD input	AN004	40
2	A1		AN009	32
3	A2		AN010	31
4	A3		AN017	29
5	A4		AN021/SDA1	26
6	A5		AN022/SCL1	27

Table 6. Pin Assignments of CN3 (10-Pin Digital Connector)

Pin No.	Signal Name	Specification	MCU	
			Signal Name	Pin No.
1	SCK	GPIO/SCK	P204/SCL0	9
2	SDA	GPIO/SDA	P407/SDA0	1
3	ADREF	Reserved	—	—
4	GND	GND	GND	—
5	D13	GPIO/SCK/PWM	P102/RSPCKA/GTIOC2B	25
6	D12	GPIO/MISO/PWM/IRQ	P100/MISOA/GTIOC5B/IRQ2	27
7	D11	GPIO/MOSI/PWM/IRQ	P101/MOSIA/GTIOC5A/IRQ1	26
8	D10	GPIO/SS/PWM	P103/SSLA0/GTIOC2A	24
9	D9	GPIO/PWM/IRQ	P104/GTIOC1B/IRQ1	23
10	D8	GPIO/PWM	P106/GTIOC8B	21

Table 7. Pin Assignments of CN4 (8-Pin Digital Connector)

Pin No.	Signal Name	Specification	MCU	
			Signal Name	Pin No.
1	D7	GPIO/RXD/PWM/IRQ	P212/RXD1/GTIOC0B/IRQ3	53
2	D6	GPIO/TXD/PWM/IRQ	P213/TXD1/GTIOC0A/IRQ2	52
3	D5	GPIO/PWM/IRQ	P414/GTIOC0B/IRQ9	55
4	D4	GPIO/PWM/IRQ	P409/GTIOC5A/IRQ6	56
5	D3	GPIO/PWM/IRQ	P105/GTIOC1A/IRQ0	22
6	D2	GPIO/PWM/IRQ	P111/GTIOC3A/IRQ4	17
7	D1	GPIO/TxD/PWM	P109/TXD9/GTIOC1A/SWO*1	15
8	D0	GPIO/RxD/PWM/IRQ	P110/RXD9/GTIOC1B/IRQ3	16

Note: A serial wire output (SWO) provides trace output. When this pin is in use for the SWO, the other functions are not available.

5.11 Current Measurement Header

The current measurement header (J7) is used to measure the current drawn by the evaluation MCU (an actual header component is not mounted on the board as shipped). The current drawn can be measured by connecting an ammeter to the evaluation MCU. When this header is to be used, remove the relevant pattern for cutting (SS20) on the soldered side. Figure 15 shows the positions of the header and pattern for cutting.

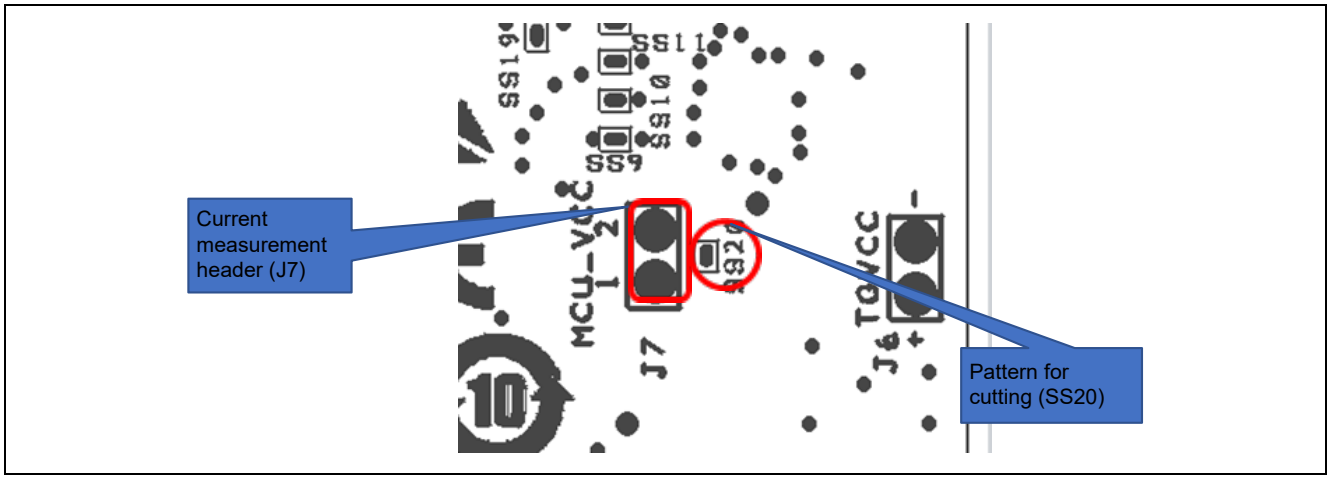

Figure 15. Positions of the Current Measurement Header (J7) and Pattern for Cutting (SS20) (Soldered Side)

5.12 MCU Headers

MCU headers are provided for by two sets of through holes (CN7 and CN8) for 28-pin headers (actual header components are not mounted on the board as shipped). The pin headers have a pitch of 2.54 mm and are connected to the evaluation MCU. Pin numbers of the MCU headers correspond to those of the evaluation MCU, and most pins are connected (with pins 2, 5, 6, 11, 28, 30, 33, 34, 39, 41, 42, 43, 45, and 48 as the exceptions).

5.13 Reset Switch

Pressing the RESET switch applies a hardware reset to the evaluation MCU.

Figure 16. Reset Switch on EK-RA4W1 Board

5.14 User Switch

An optional user switch (SW1) is mounted. It is connected to pin 44 of the evaluation MCU, which operates as pin function P402. The interrupt function is assigned to IRQ1.

Figure 17. User Switch on EK-RA4W1 Board

5.15 Patterns for Cutting

Patterns must be cut or repaired by soldering if necessary. Figure 18 shows examples of the states of patterns for cutting.

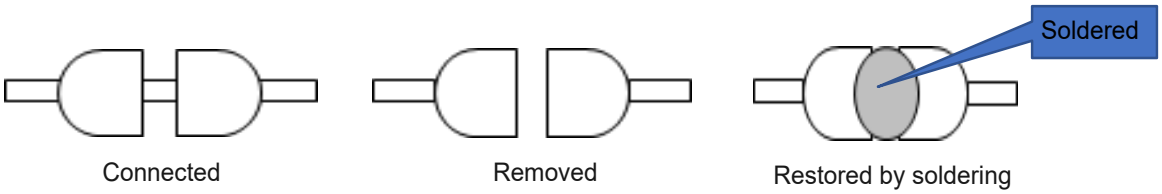

Figure 18. Examples of States of Patterns for Cutting

6. Configurations

6.1 Configuring the EK-RA4W1

This section describes how to change the setting of this product by using option-link resistors.

An option-link resistor is a 0-Ω surface-mount resistor, which is used to short-circuit or isolate a part of circuits. The subsequent sections contain lists of option-link resistors for individual functions. Fit or remove option-link resistors to switch functions with reference to the list. Resistor numbers in bold blue type indicate the initial state of the configuration on the EK-RA4W1 as shipped. For the positions of the option links, refer to section 4.2, Parts Layout.

When removing soldered components, do not apply a soldering iron to the EK-RA4W1 for more than 5 seconds. This time restriction is to avoid any damage components mounted nearby on the board.

6.2 Analog Power Supply

Table 8 and Table 9 show the option-link resistors for the analog power supply.

Table 8. Option-Link Resistors for the Analog Power Supply of the 14-Bit A/D and 12-Bit D/A Converters

Analog Power-Supply Source of the 14-Bit A/D and 12-Bit D/A Converters	Mounted	Not Mounted	Remark
3.3 V on the board	**R15, R19**	**R16, R18**	—
MCU headers	R16, R18	R15, R19	A bypass capacitor (C13) becomes ineffective.

Table 9. Option-Link Resistors for the Reference Power Supply of the 14-Bit A/D Converter

Reference Power-Supply Source of the 14-Bit A/D Converter	Mounted	Not Mounted	Remark
3.3 V on the board	**R14, R17**	**R20, R21**	—
MCU headers	R20, R21	R14, R17	A bypass capacitor (C12) becomes ineffective.

6.3 On-Chip Oscillator

Table 10 and Table 11 show the option-link resistors for the operation of the on-chip oscillator.

Table 10. Option-Link Resistors for the HOCO

Setting of the HOCO	Mounted	Not Mounted	Remark
Oscillating	**R5, R9**	**R6, R8**	—
Halted	R6, R8	R5, R9	Mount a crystal oscillator on X1 or X2 and the load capacitance as C8 or C9.

Table 11. Option-Link Resistors for the LOCO

Setting of the LOCO	Mounted	Not Mounted	Remark
Oscillating	**R11, R12**	—	—
Halted	—	R11, R12	Mount a crystal oscillator on X3 and the load capacitance as C10 or C11.

7. Handling Precautions

7.1 Adding Load

When load is added while power is being supplied through the USB, the maximum current is 300 mA during operation at 3.3 V.

When the load is added while power is being supplied externally, the maximum current is 500 mA regardless of the operating voltage.

7.2 Modifying the Board

Any modification of the board (including the patterns for cutting) will be done at the user's own responsibility.

8. Certifications

The EK-RA4W1 complies with the laws and regulations described below.

8.1 Radio-Related Laws

Japan: Type certification (authentication number: 006-000839)

Europe: CE (RE)

North America: FCC (FCC ID: 2AEMXEKRA4W1Q56)

RE Directive

Hereby, Renesas Electronics Corporation declares that the radio equipment type RTK7EKA4W1S00000BJ is in compliance with Directive 2014/53/EU.

UK Declaration of Conformity

Hereby, Renesas Electronics Corporation declares that the radio equipment type RTK7EKA4W1S00000BJ is in compliance with Radio Equipment Regulations 2017.

FCC Regulatory

Since this module is not sold to general end users directly, there is no user manual of module.

For the details about this module, please refer to the specification sheet of module.

This module should be installed in the host device according to the interface specification (installation procedure).

The following information must be indicated on the host device of this module;

FCC ID: 2AEMXEKRA4W1Q56

This device complies with part 15 of the FCC Rules. Operation is subject to the following two conditions: (1) This device may not cause harmful interference, and (2) this device must accept any interference received, including interference that may cause undesired operation.

[for FCC]

FCC CAUTION

Changes or modifications not expressly approved by the party responsible for compliance could void the user's authority to operate the equipment.

This transmitter must not be co-located or operated in conjunction with any other antenna or transmitter.

This equipment complies with FCC radiation exposure limits set forth for an uncontrolled environment and meets the FCC radio frequency (RF) Exposure Guidelines. This equipment has very low levels of RF energy that it deemed to comply without maximum permissive exposure evaluation (MPE). But it is desirable that it should be installed and operated keeping the radiator at least 20 cm or more away from person's body.

This device complies with FCC Part **15.203** because the antenna is not removable from this device.

9. Design and Manufacturing Information

The following documents apply to the EK-RA4W1. Be sure to refer to the latest versions of these documents. The newest versions of the listed documents are available at renesas.com/ra/ek-ra4w1.

Document Type	Description	Document Title	Document No.
User's manual	EK-RA4W1 hardware specifications	EK-RA4W1 User's Manual	R20UT4683EJ (this manual)
Circuit schematics	EK-RA4W1 circuit schematics	EK-RA4W1 Circuit Schematics	R20UT4684EJ
Parts list	EK-RA4W1 parts list	EK-RA4W1 BOM LIST	R12TU0088EJ
Quick start guide	Procedure for checking the initial operation	EK-RA4W1 Quick Start Guide	R20QS0015EJ
Application note	Description of sample code for use with the EK-RA4W1	RA4W1 Group BLE Module Flexible Software Package Application Note	R01AN5383EJ
User's manual for the hardware*	Hardware specifications (pin assignments, memory maps, peripheral function specifications, electrical characteristics, timing charts) and descriptions of operation	RA4W1 Group User's Manual: Hardware	R01UH0883EU

10. Website and Support

Visit the following URLs to learn about the kit and the RA family of microcontrollers, download tools and documentation, and get support.

EK-RA4W1 Resources	renesas.com/ra/ek-ra4w1
RA Product Information	renesas.com/ra
RA Product Support Forum	renesas.com/ra/forum
Renesas Support	renesas.com/support

Revision History

Rev.	Date	Description	
		Page	Summary
1.00	Apr.15.20	—	Initial release
1.10	Jun.29.21	19	Added UK Declaration of Conformity

EK-RA4W1– User's Manual

Publication Date: Jun.29.21

Published by: Renesas Electronics Corporation

EK-RA4W1 - User's Manual

Renesas Electronics Corporation

R20UT4683EJ0110