User's Manual

RA6E2 Group

Evaluation Kit for RA6E2 Microcontroller Group
EK-RA6E2 v1
User's Manual

Renesas RA Family
RA6 Series

All information contained in these materials, including products and product specifications, represents information on the product at the time of publication and is subject to change by Renesas Electronics Corp. without notice. Please review the latest information published by Renesas Electronics Corp. through various means, including the Renesas Electronics Corp. website (http://www.renesas.com).

Renesas Electronics
www.renesas.com

Rev. 3.00 Mar 2023

Notice

1. Descriptions of circuits, software and other related information in this document are provided only to illustrate the operation of semiconductor products and application examples. You are fully responsible for the incorporation or any other use of the circuits, software, and information in the design of your product or system. Renesas Electronics disclaims any and all liability for any losses and damages incurred by you or third parties arising from the use of these circuits, software, or information.
2. Renesas Electronics hereby expressly disclaims any warranties against and liability for infringement or any other claims involving patents, copyrights, or other intellectual property rights of third parties, by or arising from the use of Renesas Electronics products or technical information described in this document, including but not limited to, the product data, drawings, charts, programs, algorithms, and application examples.
3. No license, express, implied or otherwise, is granted hereby under any patents, copyrights or other intellectual property rights of Renesas Electronics or others.
4. You shall be responsible for determining what licenses are required from any third parties, and obtaining such licenses for the lawful import, export, manufacture, sales, utilization, distribution or other disposal of any products incorporating Renesas Electronics products, if required.
5. You shall not alter, modify, copy, or reverse engineer any Renesas Electronics product, whether in whole or in part. Renesas Electronics disclaims any and all liability for any losses or damages incurred by you or third parties arising from such alteration, modification, copying or reverse engineering.
6. Renesas Electronics products are classified according to the following two quality grades: “Standard” and “High Quality”. The intended applications for each Renesas Electronics product depends on the product’s quality grade, as indicated below.
   "Standard": Computers; office equipment; communications equipment; test and measurement equipment; audio and visual equipment; home electronic appliances; machine tools; personal electronic equipment; industrial robots; etc.
   "High Quality": Transportation equipment (automobiles, trains, ships, etc.); traffic control (traffic lights); large-scale communication equipment; key financial terminal systems; safety control equipment; etc.
   Unless expressly designated as a high reliability product or a product for harsh environments in a Renesas Electronics data sheet or other Renesas Electronics document, Renesas Electronics products are not intended or authorized for use in products or systems that may pose a direct threat to human life or bodily injury (artificial life support devices or systems; surgical implantations; etc.), or may cause serious property damage (space system; undersea repeaters; nuclear power control systems; aircraft control systems; key plant systems; military equipment; etc.). Renesas Electronics disclaims any and all liability for any damages or losses incurred by you or any third parties arising from the use of any Renesas Electronics product that is inconsistent with any Renesas Electronics data sheet, user’s manual or other Renesas Electronics document.
7. No semiconductor product is absolutely secure. Notwithstanding any security measures or features that may be implemented in Renesas Electronics hardware or software products, Renesas Electronics shall have absolutely no liability arising out of any vulnerability or security breach, including but not limited to any unauthorized access to or use of a Renesas Electronics product or a system that uses a Renesas Electronics product. RENESAS ELECTRONICS DOES NOT WARRANT OR GUARANTEE THAT RENESAS ELECTRONICS PRODUCTS, OR ANY SYSTEMS CREATED USING RENESAS ELECTRONICS PRODUCTS WILL BE INVULNERABLE OR FREE FROM CORRUPTION, ATTACK, VIRUSES, INTERFERENCE, HACKING, DATA LOSS OR THEFT, OR OTHER SECURITY INTRUSION (“Vulnerability Issues”). RENESAS ELECTRONICS DISCLAIMS ANY AND ALL RESPONSIBILITY OR LIABILITY ARISING FROM OR RELATED TO ANY VULNERABILITY ISSUES. FURTHERMORE, TO THE EXTENT PERMITTED BY APPLICABLE LAW, RENESAS ELECTRONICS DISCLAIMS ANY AND ALL WARRANTIES, EXPRESS OR IMPLIED, WITH RESPECT TO THIS DOCUMENT AND ANY RELATED OR ACCOMPANYING SOFTWARE OR HARDWARE, INCLUDING BUT NOT LIMITED TO THE IMPLIED WARRANTIES OF MERCHANTABILITY, OR FITNESS FOR A PARTICULAR PURPOSE.
8. When using Renesas Electronics products, refer to the latest product information (data sheets, user’s manuals, application notes, “General Notes for Handling and Using Semiconductor Devices” in the reliability handbook, etc.), and ensure that usage conditions are within the ranges specified by Renesas Electronics with respect to maximum ratings, operating power supply voltage range, heat dissipation characteristics, installation, etc. Renesas Electronics disclaims any and all liability for any malfunctions, failure or accident arising out of the use of Renesas Electronics products outside of such specified ranges.
9. Although Renesas Electronics endeavors to improve the quality and reliability of Renesas Electronics products, semiconductor products have specific characteristics, such as the occurrence of failure at a certain rate and malfunctions under certain use conditions. Unless designated as a high reliability product or a product for harsh environments in a Renesas Electronics data sheet or other Renesas Electronics document, Renesas Electronics products are not subject to radiation resistance design. You are responsible for implementing safety measures to guard against the possibility of bodily injury, injury or damage caused by fire, and/or danger to the public in the event of a failure or malfunction of Renesas Electronics products, such as safety design for hardware and software, including but not limited to redundancy, fire control and malfunction prevention, appropriate treatment for aging degradation or any other appropriate measures. Because the evaluation of microcomputer software alone is very difficult and impractical, you are responsible for evaluating the safety of the final products or systems manufactured by you.
10. Please contact a Renesas Electronics sales office for details as to environmental matters such as the environmental compatibility of each Renesas Electronics product. You are responsible for carefully and sufficiently investigating applicable laws and regulations that regulate the inclusion or use of controlled substances, including without limitation, the EU RoHS Directive, and using Renesas Electronics products in compliance with all these applicable laws and regulations. Renesas Electronics disclaims any and all liability for damages or losses occurring as a result of your noncompliance with applicable laws and regulations.
11. Renesas Electronics products and technologies shall not be used for or incorporated into any products or systems whose manufacture, use, or sale is prohibited under any applicable domestic or foreign laws or regulations. You shall comply with any applicable export control laws and regulations promulgated and administered by the governments of any countries asserting jurisdiction over the parties or transactions.
12. It is the responsibility of the buyer or distributor of Renesas Electronics products, or any other party who distributes, disposes of, or otherwise sells or transfers the product to a third party, to notify such third party in advance of the contents and conditions set forth in this document.
13. This document shall not be reprinted, reproduced or duplicated in any form, in whole or in part, without prior written consent of Renesas Electronics.
14. Please contact a Renesas Electronics sales office if you have any questions regarding the information contained in this document or Renesas Electronics products.

(Note1) “Renesas Electronics” as used in this document means Renesas Electronics Corporation and also includes its directly or indirectly controlled subsidiaries.
(Note2) “Renesas Electronics product(s)” means any product developed or manufactured by or for Renesas Electronics.

(Rev.5.0-1 October 2020)

Corporate Headquarters

TOYOSU FORESIA, 3-2-24 Toyosu,
Koto-ku, Tokyo 135-0061, Japan
www.renesas.com

Trademarks

Renesas and the Renesas logo are trademarks of Renesas Electronics Corporation. All trademarks and registered trademarks are the property of their respective owners.

Contact information

For further information on a product, technology, the most up-to-date version of a document, or your nearest sales office, please visit: www.renesas.com/contact/.

© 2023 Renesas Electronics Corporation. All rights reserved.

General Precautions in the Handling of Microprocessing Unit and Microcontroller Unit Products

The following usage notes are applicable to all Microprocessing unit and Microcontroller unit products from Renesas. For detailed usage notes on the products covered by this document, refer to the relevant sections of the document as well as any technical updates that have been issued for the products.

1. Precaution against Electrostatic Discharge (ESD)

   A strong electrical field, when exposed to a CMOS device, can cause destruction of the gate oxide and ultimately degrade the device operation. Steps must be taken to stop the generation of static electricity as much as possible, and quickly dissipate it when it occurs. Environmental control must be adequate. When it is dry, a humidifier should be used. This is recommended to avoid using insulators that can easily build up static electricity. Semiconductor devices must be stored and transported in an anti-static container, static shielding bag or conductive material. All test and measurement tools including work benches and floors must be grounded. The operator must also be grounded using a wrist strap. Semiconductor devices must not be touched with bare hands. Similar precautions must be taken for printed circuit boards with mounted semiconductor devices.
2. Processing at power-on

   The state of the product is undefined at the time when power is supplied. The states of internal circuits in the LSI are indeterminate and the states of register settings and pins are undefined at the time when power is supplied. In a finished product where the reset signal is applied to the external reset pin, the states of pins are not guaranteed from the time when power is supplied until the reset process is completed. In a similar way, the states of pins in a product that is reset by an on-chip power-on reset function are not guaranteed from the time when power is supplied until the power reaches the level at which resetting is specified.
3. Input of signal during power-off state

   Do not input signals or an I/O pull-up power supply while the device is powered off. The current injection that results from input of such a signal or I/O pull-up power supply may cause malfunction and the abnormal current that passes in the device at this time may cause degradation of internal elements. Follow the guideline for input signal during power-off state as described in your product documentation.
4. Handling of unused pins

   Handle unused pins in accordance with the directions given under handling of unused pins in the manual. The input pins of CMOS products are generally in the high-impedance state. In operation with an unused pin in the open-circuit state, extra electromagnetic noise is induced in the vicinity of the LSI, an associated shoot-through current flows internally, and malfunctions occur due to the false recognition of the pin state as an input signal become possible.
5. Clock signals

   After applying a reset, only release the reset line after the operating clock signal becomes stable. When switching the clock signal during program execution, wait until the target clock signal is stabilized. When the clock signal is generated with an external resonator or from an external oscillator during a reset, ensure that the reset line is only released after full stabilization of the clock signal. Additionally, when switching to a clock signal produced with an external resonator or by an external oscillator while program execution is in progress, wait until the target clock signal is stable.
6. Voltage application waveform at input pin

   Waveform distortion due to input noise or a reflected wave may cause malfunction. If the input of the CMOS device stays in the area between V_{IL} (Max.) and V_{IH} (Min.) due to noise, for example, the device may malfunction. Take care to prevent chattering noise from entering the device when the input level is fixed, and also in the transition period when the input level passes through the area between V_{IL} (Max.) and V_{IH} (Min.).
7. Prohibition of access to reserved addresses

   Access to reserved addresses is prohibited. The reserved addresses are provided for possible future expansion of functions. Do not access these addresses as the correct operation of the LSI is not guaranteed.
8. Differences between products

   Before changing from one product to another, for example to a product with a different part number, confirm that the change will not lead to problems. The characteristics of a microprocessing unit or microcontroller unit products in the same group but having a different part number might differ in terms of internal memory capacity, layout pattern, and other factors, which can affect the ranges of electrical characteristics, such as characteristic values, operating margins, immunity to noise, and amount of radiated noise. When changing to a product with a different part number, implement a system-evaluation test for the given product.

Renesas EK-RA6E2 Disclaimer

By using this EK-RA6E2, the User accepts the following terms, which are in addition to, and control in the event of disagreement, with Renesas' General Terms and Conditions available at renesas.com/legal-notices.

The EK-RA6E2 is not guaranteed to be error free, and the entire risk as to the results and performance of the EK-RA6E2 is assumed by the User. The EK-RA6E2 is provided by Renesas on an "as is" basis without warranty of any kind whether express or implied, including but not limited to the implied warranties of good workmanship, fitness for a particular purpose, title, merchantability, and non-infringement of intellectual property rights. Renesas expressly disclaims any implied warranty.

Renesas does not consider the EK-RA6E2 to be a finished product and therefore the EK-RA6E2 may not comply with some requirements applicable to finished products, including, but not limited to recycling, restricted substances and electromagnetic compatibility regulations. Refer to Certifications section, for information about certifications and compliance information for the EK-RA6E2. It is the kit User's responsibility to make sure the kit meets any local requirements applicable to their region.

Renesas or its affiliates shall in no event be liable for any loss of profit, loss of data, loss of contract, loss of business, damage to reputation or goodwill, any economic loss, any reprogramming or recall costs (whether the foregoing losses are direct or indirect) nor shall Renesas or its affiliates be liable for any other direct or indirect special, incidental or consequential damages arising out of or in relation to the use of this EK-RA6E2, even if Renesas or its affiliates have been advised of the possibility of such damages.

Renesas has used reasonable care in preparing the information included in this document, but Renesas does not warrant that such information is error free nor does Renesas guarantee an exact match for every application or parameter to part numbers designated by other vendors listed herein. The information provided in this document is intended solely to enable the use of Renesas products. No express or implied license to any intellectual property right is granted by this document or in connection with the sale of Renesas products. Renesas reserves the right to make changes to specifications and product descriptions at any time without notice. Renesas assumes no liability for any damages incurred by you resulting from errors in or omissions from the information included herein. Renesas cannot verify, and assumes no liability for, the accuracy of information available on another company's website.

Precautions

This Evaluation Kit is only intended for use in a laboratory environment under ambient temperature and humidity conditions. A safe separation distance should be used between this and any sensitive equipment. Its use outside the laboratory, classroom, study area, or similar such area invalidates conformity with the protection requirements of the Electromagnetic Compatibility Directive and could lead to prosecution.

The product generates, uses, and can radiate radio frequency energy and may cause harmful interference to radio communications. There is no guarantee that interference will not occur in a particular installation. If this equipment causes harmful interference to radio or television reception, which can be determined by turning the equipment off or on, you are encouraged to try to correct the interference by one or more of the following measures:

• Ensure attached cables do not lie across the equipment.

• Reorient the receiving antenna.

• Increase the distance between the equipment and the receiver.

• Connect the equipment into an outlet on a circuit different from that which the receiver is connected.

• Power down the equipment when not in use.

• Consult the dealer or an experienced radio/TV technician for help.

Note: It is recommended that wherever possible shielded interface cables are used.

The product is potentially susceptible to certain EMC phenomena. To mitigate against them it is recommended that the following measures be undertaken:

• The user is advised that mobile phones should not be used within 10 m of the product when in use.

• The user is advised to take ESD precautions when handling the equipment.

The Evaluation Kit does not represent an ideal reference design for an end product and does not fulfill the regulatory standards for an end product.

Renesas RA Family

EK-RA6E2 v1

Contents

1. Kit Overview 4
1.1 Assumptions and Advisory Notes 6
2. Kit Contents 7
3. Ordering Information 7
4. Hardware Architecture and Default Configuration 8
4.1 Kit Architecture 8
4.2 System Block Diagram 10
4.3 Jumper Settings 10
4.3.1 Copper Jumpers 10
4.3.2 Traditional Pin Header Jumpers 11
4.3.3 Default Jumper Configuration 11
5. System Control and Ecosystem Access Area 13
5.1 Power 14
5.1.1 Power Supply Options 14
5.1.2 Power Supply Considerations 15
5.1.3 Power-up Behavior 15
5.2 Debug and Trace 15
5.2.1 Debug On-Board 15
5.2.2 Debug In 16
5.2.3 Debug Out 17
5.3 Ecosystem 18
5.3.1 Seeed Grove® Connectors 18
5.3.2 SparkFun® Qwiic Connector 19
5.3.3 Digilent Pmod™ Connectors 19
5.3.4 Arduino™ Connector 21
5.3.5 MikroElektronika™ mikroBUS Connector 22
5.4 Connectivity 23
5.4.1 USB Full Speed 23
5.4.2 I3C 23
5.5 Miscellaneous 23
5.5.1 User and Power LEDs 23
5.5.2 User and Reset Switches 24
5.5.3 MCU Boot Mode 25

5.5.4 Crystals 25

6. Special Feature Access Area 25
6.1 Quad-SPI Flash 25
6.2 CAN Bus 26
6.3 Muliplexed Features 26

7. MCU Native Pin Access Area 27
7.1 Breakout Pin Headers 27
7.2 MCU and USB Current Measurement 28

8. Certifications 29
8.1 EMC/EMI Standards 29
8.2 Material Selection, Waste, Recycling and Disposal Standards 29
8.3 Safety Standards 29

9. Design and Manufacturing Information 30

10. Website and Support 30

Revision History 31

Figures

Figure 1. EK-RA6E2 Board Top Side 5
Figure 2. EK-RA6E2 Board Bottom Side 6
Figure 3. EK-RA6E2 Kit Contents 7
Figure 4. EK-RA6E2 Board Functional Area Definitions 9
Figure 5. EK-RA6E2 Board Block Diagram 10
Figure 6. Copper Jumpers 11
Figure 7. System Control and Ecosystem Access Area 13
Figure 8. Power Supply Options 14
Figure 9. Test Point Location 14
Figure 10. EK-RA6E2 Debug Interface 16
Figure 11. Seeed Grove and SparkFun® Qwiic Connectors 19
Figure 12. Pmod 1 Connector 20
Figure 13. Pmod 2 Connector 21
Figure 14. Arduino Uno Connectors 22
Figure 15. mikroBUS Connection 22
Figure 16. USB Full Speed Connector 23
Figure 17. User LEDs 24
Figure 18. Power LED 24
Figure 19. Reset and User Switches 24
Figure 20. Boot Mode 25

Figure 21. Special Feature Access Area 25
Figure 22. Quad-SPI Flash 26
Figure 23. CAN Bus 26
Figure 24. Native Pin Access Area 27
Figure 25. RA +3.3 V Current Measurement Circuit 28
Figure 26. RA MCU Current Measurement 28

Tables

Table 1. Kit Architecture 8
Table 2. Default Jumper Settings 11
Table 3. Debug Modes 15
Table 4. Jumper Connection Summary for Different Debug Modes 15
Table 5. Debug USB Connector 15
Table 6. Debug On-Board Jumper Configuration 16
Table 7. Debug In Mode Jumper Configuration 16
Table 8. JTAG/SWD Connector (J20) 17
Table 9. JTAG/SWD Connector (J13) 17
Table 10. Debug Out Jumper Configuration 18
Table 11. Grove 1 Connector 18
Table 12. Grove 2 Connector 18
Table 13. Qwiic Connector 19
Table 14. Pmod 1 Connector 19
Table 15. Pmod 2 Connector 20
Table 16. Arduino Uno Connections 21
Table 17. mikroBUS Connections 22
Table 18. USB Full Speed Connector 23
Table 19. I^2C/I3C Pullup Configuration 23
Table 20. EK-RA6E2 Board LED Functions 23
Table 21. EK-RA6E2 Board Switches 24
Table 22. Main 20 MHz Crystal Selection 25
Table 23. Quad-SPI Flash Port Assignments 25
Table 24. CAN Bus Assignments 26
Table 25. CAN Connector Pin Assignments 26
Table 26. EK-RA6E2 Board Design Package Contents 30

1. Kit Overview

The EK-RA6E2, an Evaluation Kit for RA6E2 MCU Group, enables users to seamlessly evaluate the features of the RA6E2 MCU group and develop embedded systems applications using Flexible Software Package (FSP) and e^2 studio IDE. The users can use rich on-board features along with their choice of popular ecosystems add-ons to bring their big ideas to life.

The key features of the EK-RA6E2 board are categorized in three groups (consistent with the architecture of the kit) as follows:

MCU Native Pin Access

- R7FA6E2BB3CFM MCU (referred to as RA MCU)
- 200 MHz, Arm® Cortex®-M33 core
- 256 kB Code Flash, 40 kB SRAM
- 64 pins, LQFP package
- Native pin access through 2 x 14-pin and 1 x 40-pin male headers
- MCU current measurement points for precision current consumption measurement
- Multiple clock sources - RA MCU oscillator and sub-clock oscillator crystals, providing precision 20.000 MHz and 32,768 Hz reference clock. Additional low-precision clocks are available internal to the RA MCU

System Control and Ecosystem Access

- USB Full Speed Device (micro-AB connector)
- Three 5 V input sources
  - USB (Debug, Full Speed)
  - External power supply (using surface mount clamp test points and J31 through holes)
- Three Debug modes
  - Debug on-board (SWD)
  - Debug in (SWD)
  - Debug out (JTAG, SWD)
- User LEDs and buttons
  - Three User LEDs (red, blue, green)
  - Power LED (white) indicating availability of regulated power
  - Debug LED (yellow) indicating the debug connection
  - Two User buttons
  - One Reset button
- Five most popular ecosystems expansions
  - 2 Seeed Grove® system (I3C/Analog) connectors
  - SparkFun® Qwiic® connector
  - 2 Digilent Pmod™ (SPI and UART) connectors
  - Arduino™ (Uno R3) connector
  - MikroElektronika™ mikroBUS connector
- MCU boot configuration jumper

Special Feature Access

- 16 MB (128 Mb) External Quad-SPI Flash
- CAN FD (3-pin header)

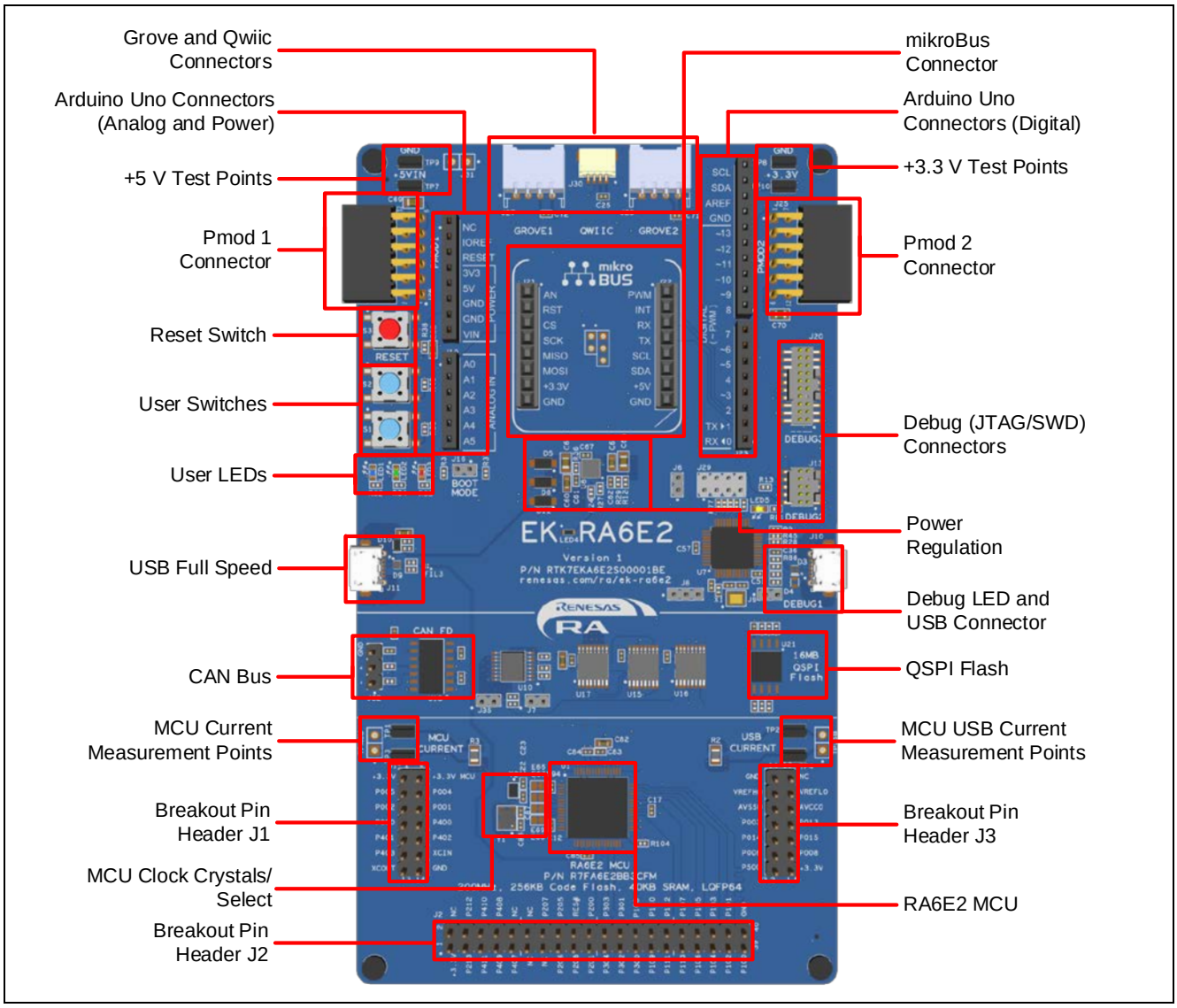

Figure 1. EK-RA6E2 Board Top Side

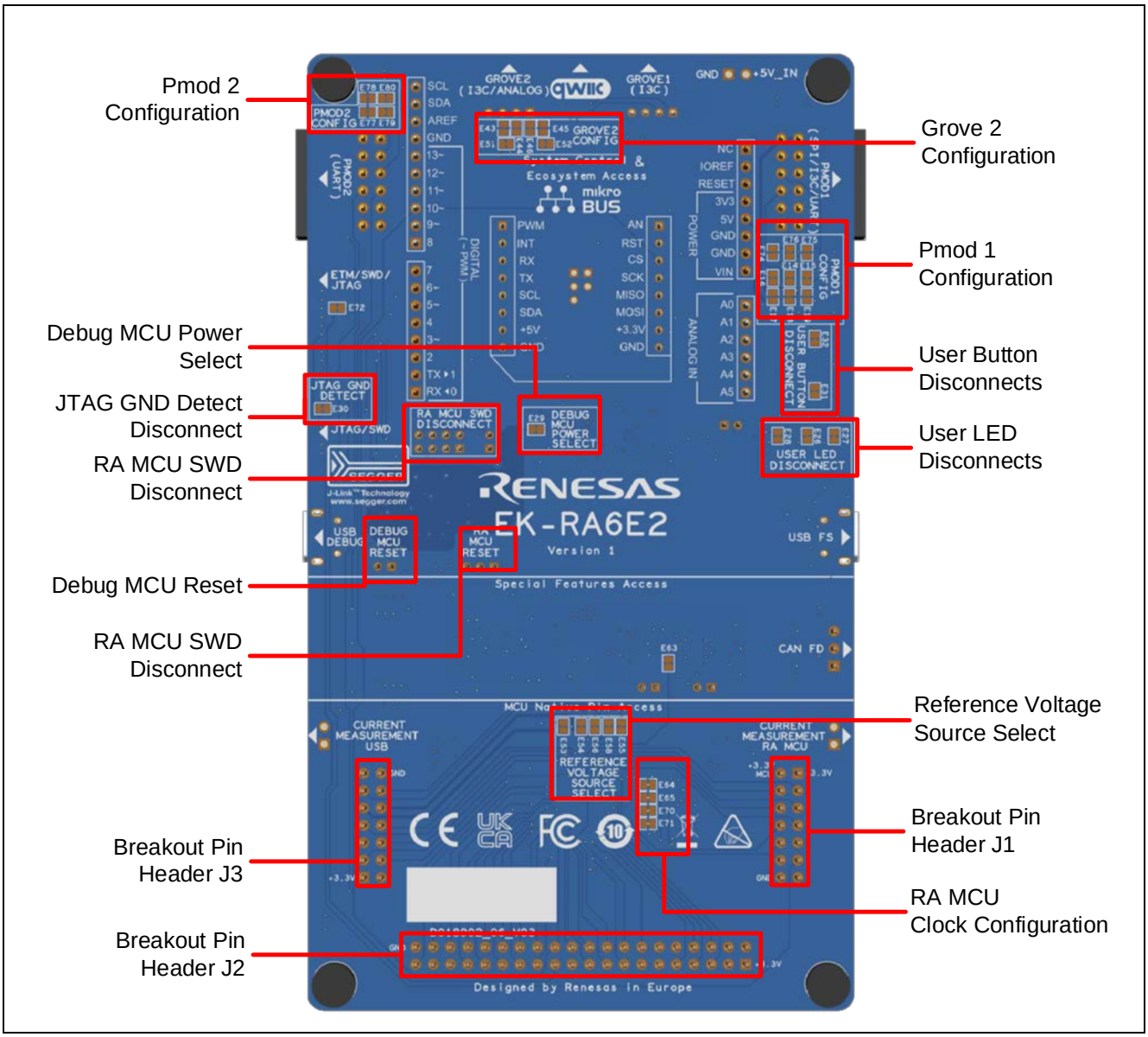

Figure 2. EK-RA6E2 Board Bottom Side

1.1 Assumptions and Advisory Notes

1. It is assumed that the user has a basic understanding of microcontrollers and embedded systems hardware.
2. It is recommended that the user refers to the *EK-RA6E2 Quick Start Guide* to get acquainted with the kit and the Quick Start example project that EK-RA6E2 board comes pre-programmed with.
3. Flexible Software Package (FSP) and Integrated Development Environment (IDE) such as e^2 studio are required to develop embedded applications on EK-RA6E2 kit.
4. Instructions to download and install software, import example projects, build them and program the EK-RA6E2 board are provided in the quick start guide.
5. The MCU fitted to the EK board may not contain the latest version of the on-chip boot firmware.

2. Kit Contents

The following components are included in the kit:

1. EK-RA6E2 v1 board
2. Micro USB device cable (type-A male to micro-B male)

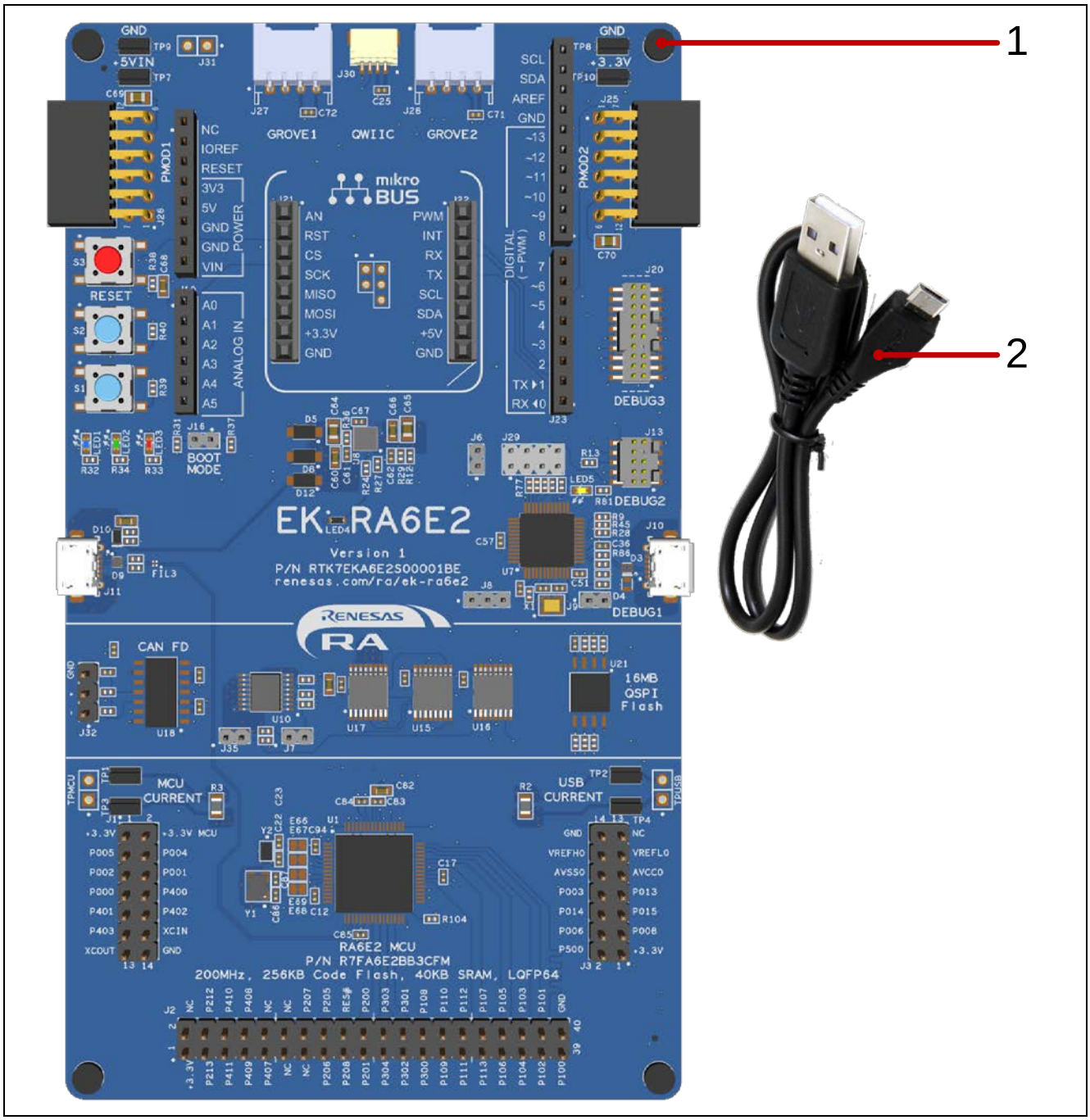

Figure 3. EK-RA6E2 Kit Contents

3. Ordering Information

- EK-RA6E2 v1 kit orderable part number: RTK7EKA6E2S0000**1**BE

  Note: The underlined character in the orderable part number represents the kit version.

- EK-RA6E2 board dimensions: 80 mm (width) x 140 mm (length)

4. Hardware Architecture and Default Configuration

4.1 Kit Architecture

The EK-RA6E2 board is designed with three sections or areas to help shorten the learning curve of the users and maximize the design and knowledge reuse among similar kits. The contents of these three areas are conceptually standardized among similar kits.

Table 1. Kit Architecture

Kit area	Area features	Area present on all similar kits	Functionality is:
MCU Native Pin Access Area	RA MCU, breakout pin headers for all MCU I/O and power, current measurement	Yes	MCU dependent
Special Feature Access Area	MCU special features: Quad-SPI Flash, CAN	Optional	MCU dependent
System Control and Ecosystem Access Area	Power, Debug MCU, User LED and buttons, reset, ecosystem connectors, USB Full Speed, Boot configuration	Yes	Same or similar across similar kits

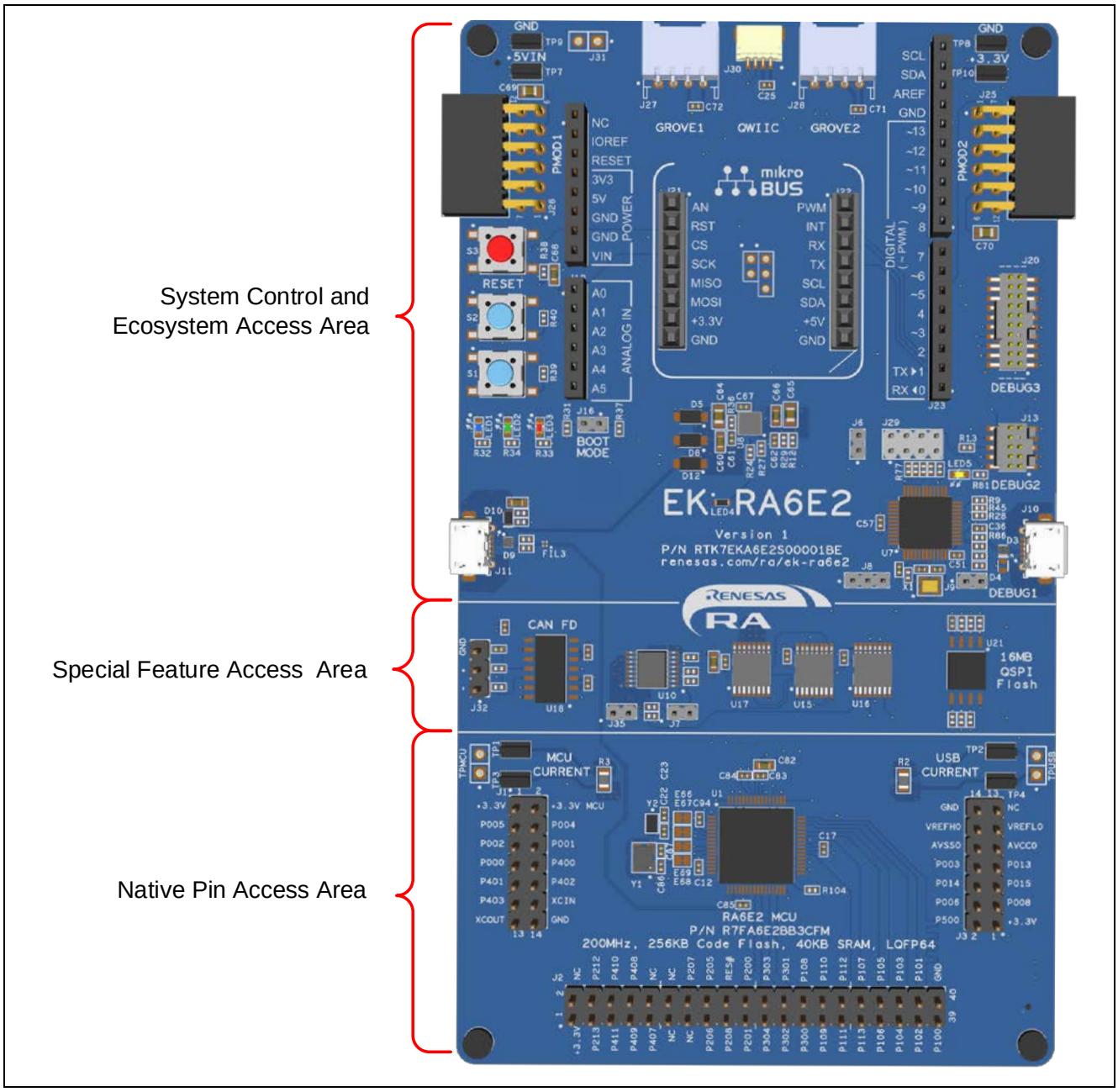

Figure 4. EK-RA6E2 Board Functional Area Definitions

4.2 System Block Diagram

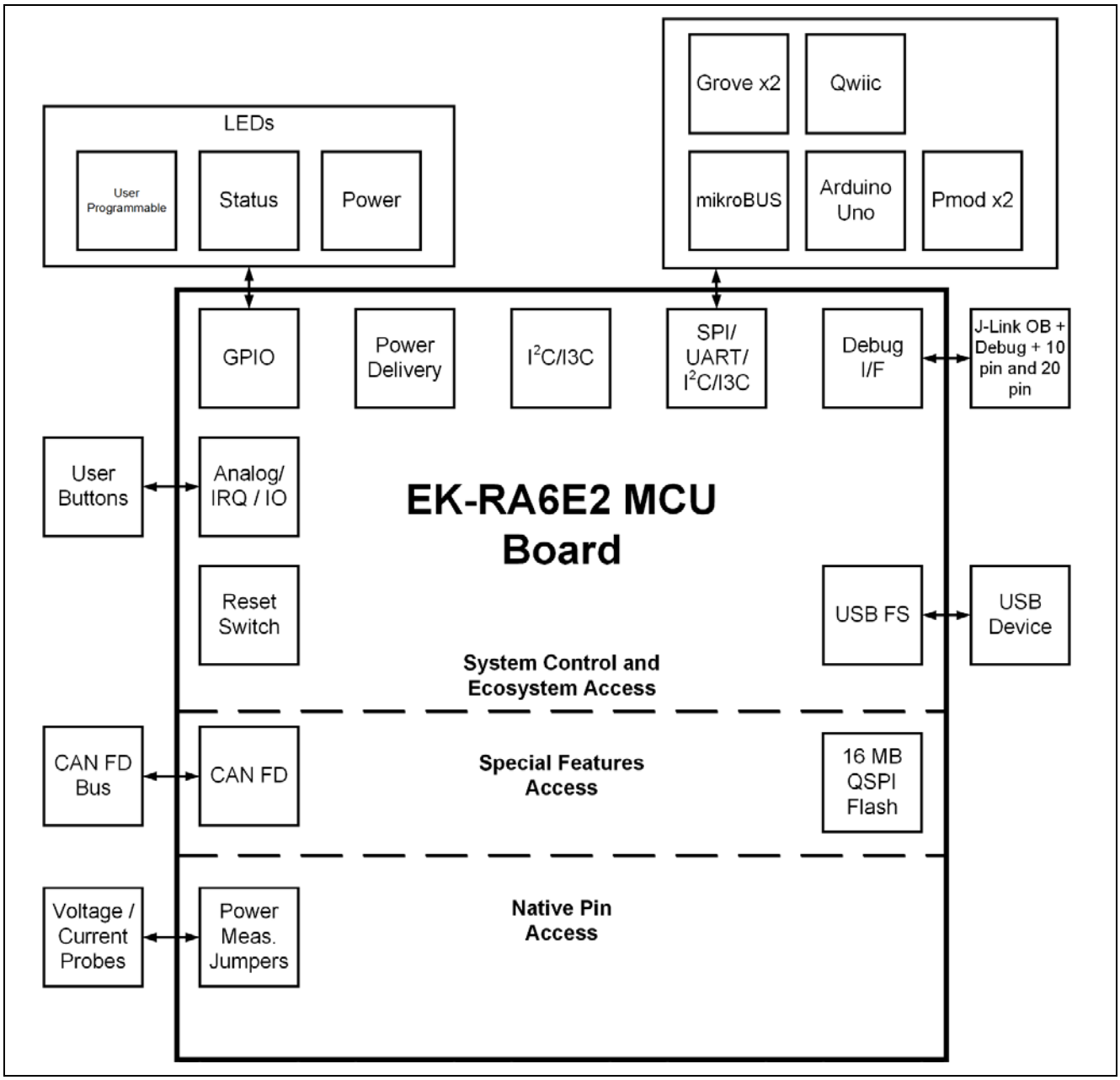

Figure 5. EK-RA6E2 Board Block Diagram

4.3 Jumper Settings

Two types of jumpers are provided on the EK-RA6E2 board.

1. Copper jumpers (trace-cut type and solder bridge type)
2. Traditional pin header jumpers

The following sections describe each type and their default configuration.

4.3.1 Copper Jumpers

Copper jumpers are of two types, designated **trace-cut** and **solder-bridge**.

A **trace-cut jumper** is provided with a narrow copper trace connecting its pads. The silk screen overlay printing around a trace-cut jumper is a solid box. To isolate the pads, cut the trace between pads adjacent to each pad, then remove the connecting copper foil either mechanically or with the assistance of heat. Once the etched copper trace is removed, the trace-cut jumper is turned into a solder-bridge jumper for any later changes.

A **solder-bridge** jumper is provided with two isolated pads that may be joined together by one of three methods:

- Solder may be applied to both pads to develop a bulge on each and the bulges joined by touching a soldering iron across the two pads.
- A small wire may be placed across the two pads and soldered in place.
- A SMT resistor, size 0805, 0603, or 0402, may be placed across the two pads and soldered in place. A zero-ohm resistor shorts the pads together.

For any copper jumper, the connection is considered **closed** if there is an electrical connection between the pads (default for trace-cut jumpers.) The connection is considered **open** if there is no electrical connection between the pads (default for the solder-bridge jumpers.)

Figure 6. Copper Jumpers

4.3.2 Traditional Pin Header Jumpers

These jumpers are traditional small pitch jumpers that require an external shunt to open/close them. The traditional pin jumpers on the EK-RA6E2 board are 2 mm pitch headers and require compatible 2 mm shunt jumpers.

4.3.3 Default Jumper Configuration

The following table describes the default settings for each jumper on the EK-RA6E2 board. This includes copper jumpers (Ex designation) and traditional pin jumpers (Jx designation.)

The Circuit Group for each jumper is the designation found in the board schematic (available in the Design Package). Functional details for many of the listed jumpers may be found in sections associated with each functional area of the kits.

Table 2. Default Jumper Settings

Location	Circuit Group	Default Open/Closed	Function
J6	J-Link OB	Closed	Configures J-Link OB connection to MCU mode
J7	I3C	Open	Configures I3C pins to operate in either I3C or I^2C mode
J8	J-Link OB	Jumper on pins 1-2	Configures the MCU for normal operation
J9	J-Link OB	Open	Enables the on-board debugger
J16	MCU boot mode	Open	Configures the MCU for normal boot mode
J29	J-Link OB	Jumper on pins 1-2 Jumper on pins 3-4 Jumper on pins 5-6 Jumper on pins 7-8	Connects the J-Link OB debugger to the RA MCU
J35	QSPI Flash	Open	Disables the QSPI Flash
E14	Pmod 1	Closed	Connects P110 (MISOA/RXD9) to Pmod 1 pin 3
E15	Pmod 1	Closed	Connects P111 (RSPCKA/SCK9) to Pmod 1 pin 4
E16	Pmod 1	Closed	Connects +3.3 V to Pmod 1 pin 6 and pin 12
E17	Pmod 1	Open	Connects +5.0 V to Pmod 1 pin 6 and pin 12
E18	Pmod 1	Open	Connects P100 (SCL) to Pmod 1 pin 3
E19	Pmod 1	Open	Connects P101 (SDA) to Pmod 1 pin 4
E26	User LED	Closed	Connects P400 to user LED2

Location	Circuit Group	Default Open/Closed	Function
E27	User LED	Closed	Connects P207 to user LED1
E28	User LED	Closed	Connects P113 to user LED3
E29	Debug MCU Power	Closed	Connects the debug MCU power to +3.3 V
E30	JTAG	Closed	Connects the JTAG GND detect pin on J20 and J13 to GND
E31	User Switch	Closed	Connects P005 to user switch S1
E32	User Switch	Closed	Connects P304 to user switch S2
E43	Grove 1	Open	Connects P014 to Grove 1 pin 2
E44	Grove 1	Closed	Connects P101 (SDA) to Grove 1 pin 2
E45	Grove 1	Open	Connects P015 to Grove 1 pin 1
E46	Grove 1	Closed	Connects P100 (SCL) to Grove 1 pin 1
E51	Pmod 1	Closed	Connects P014 to Pmod 1 pin 10
E52	Pmod 1	Closed	Connects P015 to Pmod 1 pin 9
E53	MCU Power	Closed	Connects AVCC0 to +3.3 V
E54	MCU Power	Closed	Connects AVSS0 to GND
E55	MCU Power	Closed	Connects VREFH0 to 3.3 V
E56	MCU Power	Closed	Connects VREFL0 to GND
E58	MCU Power	Closed	Connects VREFH0 to Arduino AREF
E63	I3C	Closed	Connects P208 for control of the I3C/I^2C SDA pull-up (active when P208 is driven high)
E64	MCU Clock	Open	Connects XCIN pin to pin header J1 pin 12
E65	MCU Clock	Open	Connects XCOUT pin to pin header J1 pin 13
E66	MCU Clock	Closed	Connects XCIN to 32.768 kHz crystal
E67	MCU Clock	Closed	Connects XCOUT to 32.768 kHz crystal
E68	MCU Clock	Closed	Connects P212/EXTAL to 20 MHz crystal
E69	MCU Clock	Closed	Connects P213/XTAL to 20 MHz crystal
E70	MCU Clock	Open	Connects P213/XTAL pin to pin header J2 pin 3
E71	MCU Clock	Open	Connects P212/EXTAL pin to pin header J2 pin 4
E72	J-Link OB	Closed	Enables debugger TRST signal
E74	Pmod 1	Open	Connects P303 (CTS9) to Pmod 1 pin 1
E75	Pmod 1	Open	Connects P301 (CTS_RTS9) to Pmod 1 pin 4
E76	Pmod 1	Closed	Connects P301 (SSLA0) to Pmod 1 pin 1
E77	Pmod 2	Open	Connects P213 (XTAL) to Pmod 2 pin 2
E78	Pmod 2	Open	Connects P212 (EXTAL) to Pmod 2 pin 3
E79	Pmod 2	Closed	Connects P411 (TXD0) to Pmod 2 pin 2
E80	Pmod 2	Closed	Connects P410 (RXD0) to Pmod 2 pin 3

5. System Control and Ecosystem Access Area

The following figure shows the System Control and Ecosystem Access area on the EK-RA6E2 board. Subsequent sections detail the features and functionality provided in this area.

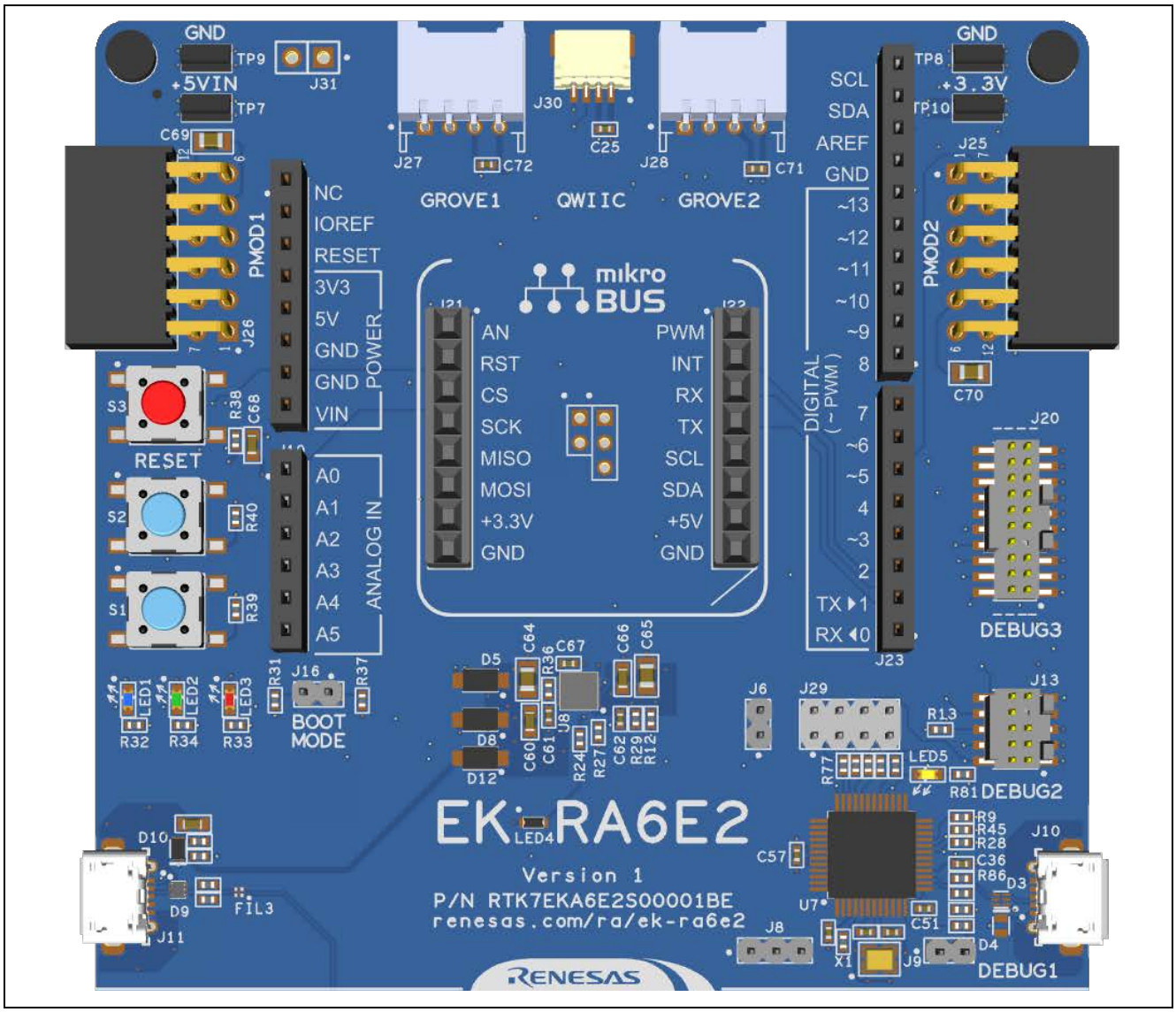

Figure 7. System Control and Ecosystem Access Area

5.1 Power

The EK-RA6E2 kit is designed for +5 V operation. An on-board Low Dropout Regulator (LDO) is used to convert the 5 V supply to a 3.3 V supply. The 3.3 V supply is used to power the RA MCU and other peripheral features.

5.1.1 Power Supply Options

This section describes the different ways in which EK-RA6E2 kit can be powered.

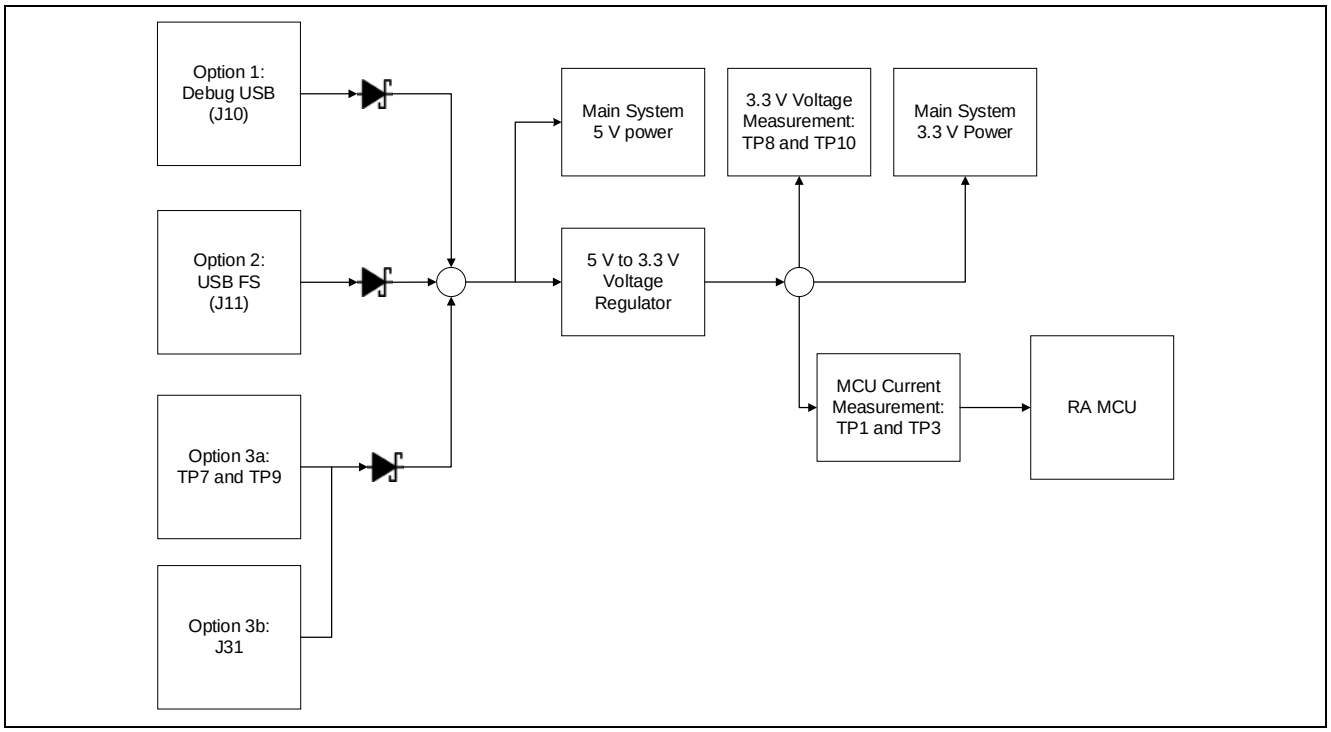

Figure 8. Power Supply Options

5.1.1.1 Option 1: Debug USB

5 V may be supplied from an external USB host to the USB debug connector (J10) labelled DEBUG1 on the board. Power from this source is connected to the main system 5 V power. Reverse current protection is provided between this connector and the main system 5 V power.

5.1.1.2 Option 2: USB Full Speed

5 V can be supplied from the USB Full Speed connector (J11). Reverse current protection is also provided between this connector and the main system 5 V Power.

5.1.1.3 Option 3: 5 V Input Test Points or 2-pin Header J31

5 V may be supplied from an external power supply to test points on the board. TP7 (5 V) and TP9 (GND) are loop-style test points, and J31 Pin2 (5 V) and J31 Pin1 (GND) are through hole test points. The two types of test points are electrically equivalent, and both are provided for user convenience. Power from this source is connected to the main system 5 V power. Reverse current protection is provided between the 5 V test points and the main system 5 V power. These test points can be found at the top left of the board above Pmod 1 .

A standard 0.1” header plug can be fitted to J31 so that the board can be powered this way.

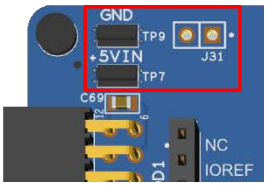

Figure 9. Test Point Location

5.1.2 Power Supply Considerations

The on-board LDO regulator which supplies +3.3 V has a built-in current limit of 2.0 A. Make sure the total current required by the RA MCU, any active on-board features, and any connected peripheral devices does not exceed this limit.

Note: The total current available from a typical USB host is 500 mA maximum. Depending on the configuration of the kit, multiple power sources may be required.

5.1.3 Power-up Behavior

When powered, the white LED near the center of the board (the “dash” in the EK-RA6E2 name) will light up. For more details on initial power up behavior, see the *EK-RA6E2 Quick Start Guide*.

5.2 Debug and Trace

The EK-RA6E2 board supports the following three debug modes.

Table 3. Debug Modes

Debug Modes	Debug MCU (the device that connects to the IDE on your PC)	Target MCU (the device that is being debugged)	Debugging Interface/Protocol	Connector Used
Debug on-board	RA4M2 (on-board)	RA6E2 (on-board)	SWD	Micro USB (J10)
Debug in	External debugging tools	RA6E2 (on-board)	SWD	20-pin connector (J20) or 10-pin connector (J13)
Debug out	RA4M2 (on-board)	Any external RA MCU	SWD, JTAG	Micro USB (J10) plus either 20-pin connector (J20) or 10-pin connector (J13)

Notes:

- See Table 5 for the Debug USB connector pin definitions.
- See Table 8 for the 20-pin JTAG connector pin definitions.
- See Table 9 for the 10-pin JTAG connector pin definitions.

The following table summarizes the jumper setting for each of the debug modes.

Table 4. Jumper Connection Summary for Different Debug Modes

Debug Modes	J6	J8	J9	J29
Debug on-board	Closed	Jumper on pins 1-2	Open	Jumpers on pins 1-2, 3-4, 5-6, 7-8
Debug in	Closed	Jumper on pins 1-2	Closed	Jumpers on pins 1-2, 3-4, 5-6, 7-8
Debug out	Open	Jumper on pins 2-3	Open	All pins open

5.2.1 Debug On-Board

The on-board debug functionality is provided using Renesas RA4M2 Debug MCU and SEGGER J-Link® firmware. Debug USB micro-B connector (J10) connects the RA4M2 Debug MCU to an external USB Full Speed Host, allowing re-programming and debugging of the target RA MCU firmware. This connection is the default debug mode for the EK-RA6E2 board.

The RA4M2 debug MCU connects to the target RA MCU using the SWD interface.

Table 5. Debug USB Connector

Debug USB Connector		EK-RA6E2
Pin	**Description**	**Signal/Bus**
J10-1	+5VDC	+5V_USB_DBG
J10-2	Data-	USB_DM (U7 pin 14)
J10-3	Data+	USB_DP (U7 pin 15)
J10-4	USB ID, jack internal switch, cable inserted	NC

Debug USB Connector		EK-RA6E2
Pin	**Description**	**Signal/Bus**
J10-5	Ground	GND

A yellow indicator, LED5, shows the visual status of the debug interface. When the EK-RA6E2 board is powered on, and LED5 is blinking, it indicates that the RA4M2 debug MCU is not connected to a programming host. When LED5 is on solid, it indicates that the RA4M2 debug MCU is connected to a programming interface.

To configure the EK-RA6E2 board to use the Debug On-Board mode, configure the jumpers using the following table.

Table 6. Debug On-Board Jumper Configuration

Location	Default Open/Closed	Function
J6	Closed	Target RA MCU MD connected to debug
J8	Jumper on pins 1-2	Target RA MCU RESET# connected to nRESET signal
J9	Open	RA4M2 debug MCU in normal operation mode
J29	Jumpers on pins 1-2, 3-4, 5-6, 7-8	Target RA MCU debug signals connected to the debug interface

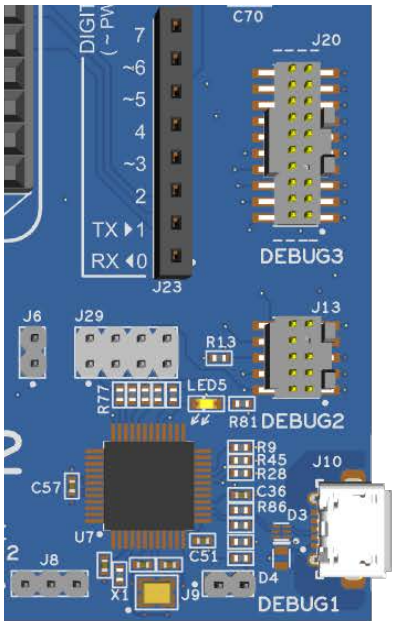

Figure 10. EK-RA6E2 Debug Interface

5.2.2 Debug In

One 20-pin Cortex® Debug Connector at J20 supports JTAG and SWD debug. One 10-pin Cortex® Debug Connector at J13 supports JTAG and SWD. Either of these connectors may be used for external debug of the target RA MCU.

To configure the EK-RA6E2 board to use the Debug In mode, configure the jumpers using the following table.

Table 7. Debug In Mode Jumper Configuration

Location	Default Open/Closed	Function
J6	Closed	Target RA MCU MD connected to debug
J8	Jumper on pins 1-2	Target RA MCU RESET# connected to nRESET signal
J9	Closed	RA4M2 debug MCU is held in RESET
J29	Jumpers on pins 1-2, 3-4, 5-6, 7-8	Target RA MCU debug signals connected to the debug interface

Table 8. JTAG/SWD Connector (J20)

JTAG Connector			EK-RA6E2
Pin	**JTAG Pin Name**	**SWD Pin Name**	**Signal/Bus**
J20-1	Vtref	Vtref	+3V3
J20-2	TMS	SWDIO	P108/SWDIO
J20-3	GND	GND	GND
J20-4	TCK	SWCLK	P300/SWCLK
J20-5	GND	GND	GND
J20-6	TDO	SWO	P109
J20-7	Key	Key	NC
J20-8	TDI	NC/EXTb	P110
J20-9	GNDDetect	GNDDetect	GND (cut E30 to open)
J20-10	nSRST	nSRST	RESET# (via J8)
J20-11	N/A	N/A	GND
J20-12	N/A	N/A	NC
J20-13	N/A	N/A	GND
J20-14	N/A	N/A	NC
J20-15	N/A	N/A	GND
J20-16	N/A	N/A	TRST
J20-17	N/A	N/A	GND
J20-18	N/A	N/A	NC
J20-19	N/A	N/A	GND
J20-20	N/A	N/A	NC

Table 9. JTAG/SWD Connector (J13)

JTAG Connector			EK-RA6E2
Pin	**JTAG Pin Name**	**SWD Pin Name**	**Signal/Bus**
J13-1	Vtref	Vtref	+3V3
J13-2	TMS	SWDIO	P108/SWDIO
J13-3	GND	GND	GND
J13-4	TCK	SWCLK	P300/SWCLK
J13-5	GND	GND	GND
J13-6	TDO	SWO	P109
J13-7	Key	Key	NC
J13-8	TDI	NC/EXTb	P110
J13-9	GNDDetect	GNDDetect	GND (cut E30 to open)
J13-10	nSRST	nSRST	RESET# (via J8)

Note: The Cortex® Debug Connector is fully described in the Arm® CoreSight™ Architecture Specification.

5.2.3 Debug Out

The EK-RA6E2 board can be configured to use the RA4M2 debug MCU to debug target RA MCU on an external board.

A yellow indicator, LED5, shows the visual status of the debug interface. When the EK-RA6E2 board is powered on, and LED5 is blinking, this indicates that the RA4M2 debug MCU is not connected to a programming host. When LED5 is on solid, this indicates that the RA4M2 debug MCU is connected to a programming interface.

To configure the EK-RA6E2 board to use the Debug Out mode, configure the jumpers according to the following table.

Table 10. Debug Out Jumper Configuration

Location	Default Open/Closed	Function
J6	Open	No connection to RA MCU
J8	Jumper on pins 2-3	On-board RA MCU is held in RESET
J9	Open	RA4M2 debug MCU in normal operation mode
J29	All jumpers removed	Disconnects the on-board RA MCU debug signals from the debug interface

5.3 Ecosystem

The System Control and Ecosystem area provides users the option to simultaneously connect several third-party add-on modules compatible with four most popular ecosystems using the following connectors:

1. Two Seeed Grove® system (I3C) connectors
2. SparkFun® Qwiic® connector
3. Two Digilent Pmod™ (SPI and UART) connectors
4. Arduino™ (Uno R3) connector
5. MikroElektronika™ mikroBUS connector

5.3.1 Seeed Grove® Connectors

5.3.1.1 Grove 1

A Seeed Grove I3C connector is provided at J28. The RA MCU acts as a two-wire serial master, and a connected module acts as a two-wire serial slave. Alternatively, this port can be configured to support two analog (ADC) inputs.

To configure for I3C function, complete links E46 and E44 and unlink E43 and E45.

To configure for analog function, unlink E46 and E44 and complete links E43 and E45.

Table 11. Grove 1 Connector

Grove 1 Connector		EK-RA6E2
Pin	**Description**	**Signal/Bus**
J28-1	SCL / AN	P100 (SCL) or P015 (AN013)
J28-2	SDA / AN	P101 (SDA) or P014 (AN012)
J28-3	VCC	+3.3 V
J28-4	GND	GND

5.3.1.2 Grove 2

A Seeed Grove I3C connector is provided at J27. The RA MCU acts as a two-wire serial master, and a connected module acts as a two-wire serial slave.

Table 12. Grove 2 Connector

Grove 2 Connector		EK-RA6E2
Pin	**Description**	**Signal/Bus**
J27-1	SCL	P100 (SCL)
J27-2	SDA	P101 (SDA)
J27-3	VCC	+3.3 V
J27-4	GND	GND

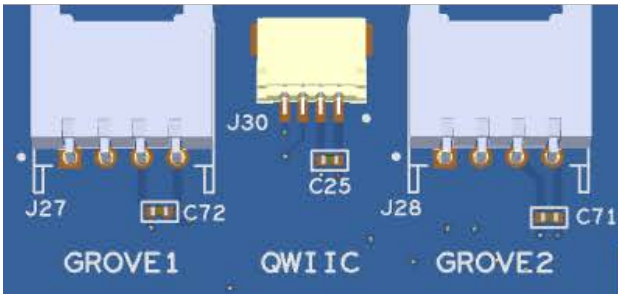

Figure 11. Seeed Grove and SparkFun® Qwiic Connectors

5.3.2 SparkFun® Qwiic Connector

A SparkFun® Qwiic connector is provided at J30. The main MCU acts as a two-wire serial master, and a connected module acts as a two-wire serial slave (data lines are shared with Grove 1 and Grove 2).

Table 13. Qwiic Connector

Qwiic Connector		EK-RA6E2
Pin	**Description**	**Signal/Bus**
J30-1	GND	GND
J30-2	VCC	+3.3V
J30-3	SDA	P101 (SDA)
J30-4	SCL	P100 (SCL)

5.3.3 Digilent Pmod™ Connectors

Two 12-pin connectors are provided to support Pmod modules where the RA MCU acts as the master, and the connected module acts as a slave device.

These interfaces may be configured in firmware to support several Pmod types such as Type-2A (expanded SPI) and Type-3A (expanded UART).

The EK-RA6E2 board also provides jumpers so the 12-pin connector may alternatively be used for Pmod Type-6A (I^2C).

The default 12-pin Pmod interface supports +3.3 V devices. Please ensure that any Pmod device installed is compatible with a +3.3 V supply.

The Pmod interface option for Type-6A (I^2C) may also support +5.0 V devices. Please ensure that only 5 V capable modules are used when this option is selected.

5.3.3.1 Pmod 1

A 12-pin Pmod connector is provided at J26, Pmod 1.

Table 14. Pmod 1 Connector

Pmod 1 Connector Default				EK-RA6E2	Pmod 1 Configuration	
Pin	**Option Type-2A (SPI)**	**Option Type-3A (UART)**	**Option Type-6A (I^2C)**	**Signal/Bus**	**Short**	**Open**
J26-1	SS		NC	P301 (SSLA0)	E76	E74, E75
		CTS	NC	P303 (CTS9)	E74	E76
J26-2	MOSI	TXD	NC	P109 (MOSIA/TXD9)		
J26-3	MISO	RXD	NC	P110 (MISOA/RXD9)	E14	E18
			SCL	P100 (SCL)	E18	E14
J26-4	SCK			P111 (RSPCKA)	E15	E19, E75
		RTS		P301 (CTS_RTS9)	E75	E15, E19
			SDA	P101 (SDA)	E19	E15, E75
J26-5	GND			GND		

Pmod 1 Connector Default		EK-RA6E2	Pmod 1 Configuration	
J26-6	VCC	+3.3 V	E16	E17
		+5.0 V	E17	E16
J26-7	GPIO / INT (slave to master)	P105 (IRQ0)		
J26-8	GPIO / RESET (master to slave)	P408		
J26-9	GPIO	P015		
J26-10	GPIO	P014		
J26-11	GND	GND		
J26-12	VCC	+3.3 V	E16	E17
		+5.0 V	E17	E16

Note: Exercise caution while modifying power source trace jumpers, E16 and E17. Permanent damage to the EK-RA6E2 board and/or connected modules may result.

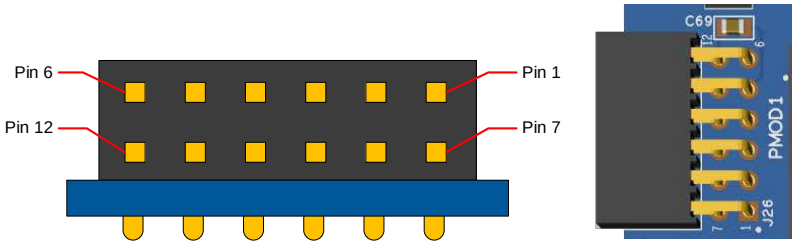

Figure 12. Pmod 1 Connector

5.3.3.2 Pmod 2

A 12-pin Pmod connector is provided at J25, Pmod 2. This Pmod is dedicated type-3A (expanded UART). There are two options for SCI0 on Pmod 2. By cutting trace-cut links E79 and E80, and connecting solder-bridge links E77 and E78, the secondary option is selected. The secondary option can only be used if the main 20 MHz clock crystal is not being used. This also requires that trace-cut links E68 and E69 are cut, and solder-bridge links E70 and E71 are connected. The benefit of using P212 and P213 over P410 and P411 is that the serial data exchanged with Pmod 2 is not also shared with the debugger serial console.

Table 15. Pmod 2 Connector

Pmod 2 Connector		EK-RA6E2	Pmod 2 Configuration	
Pin	**Description**	**Signal/Bus**	**Short**	**Open**
J25-1	CTS	P302 (CTS0)		
J25-2	TXD	P411 (TXD0)	E79	E77
		P213 (TXD0)	E77	E79*
J25-3	RXD	P410 (RXD0)	E80	E78
		P212 (RXD0)	E78	E80*
J25-4	RTS	P103 (CTS_RTS0)		
J25-5	GND	GND		
J25-6	VCC	+3.3V		
J25-7	GPIO / INT (slave to master)	P409 (IRQ6)		
J25-8	GPIO / RESET (master to slave)	P102		
J25-9	GPIO	P107		
J25-10	GPIO	P106		
J25-11	GND	GND		
J25-12	VCC	+3.3V		

*Note: The use of these options also requires the disconnection of 20 MHz crystal Y1 (open links E68 and E69) and the shorting of links E70 and E71.

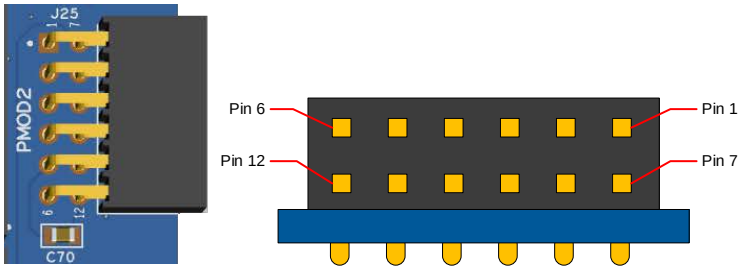

Figure 13. Pmod 2 Connector

5.3.4 Arduino™ Connector

Near the center of the System Control and Ecosystem Access area is an Arduino Uno R3 compatible connector interface.

Table 16. Arduino Uno Connections

Arduino Compatible Connector				**EK-RA6E2**
Pin	**Description**			**Signal/Bus**
J18-1	NC			NC
J18-2	IOREF			+3.3V
J18-3	RESET			RESET#
J18-4	3.3 V			+3.3V
J18-5	5 V			+5V
J18-6	GND			GND
J18-7	GND			GND
J18-8	VIN			NC
J19-1	A0			P000 (AN000)
J19-2	A1			P001 (AN001)
J19-3	A2			P002 (AN002)
J19-4	A3			P004 (AN004)
J19-5	A4			P003 (AN007)
J19-6	A5			P013 (AN011)
J23-1	D0	RXD		P410 (GPIO/RXD0)
J23-2	D1	TXD		P411 (GPIO/TXD0)
J23-3	D2	INT0		P105 (GPIO/IRQ0)
J23-4	D3	INT1	PWM	P302 (GPIO/IRQ5/GTIOC4A)
J23-5	D4			P500 (GPIO)
J23-6	D5		PWM	P409 (GPIO/GTIOC1A)
J23-7	D6		PWM	P113 (GPIO/GTIOC2A)
J23-8	D7			P008 (GPIO)
J24-1	D8			P006 (GPIO)
J24-2	D9		PWM	P403 (GPIO/GTIOC3A)
J24-3	D10	SPI_SS	PWM	P301 (GPIO/SSLA0/GTIOC4B)
J24-4	D11	SPI_MOSI	PWM	P109 (GPIO/MOSIA/GTIOC1A)
J24-5	D12	SPI_MISO	PWM	P110 (GPIO/MISOA/GTIOC1B)
J24-6	D13	SPI_SCK	PWM	P111 (GPIO/RSPCKA/GTIOC3A)
J24-7	GND			GND
J24-8	AREF			ARDUINO_AREF (linked to VREFH0 via E58)
J24-9	SDA			P101/P206 (SDA)
J24-10	SCL			P100/P205 (SCL)

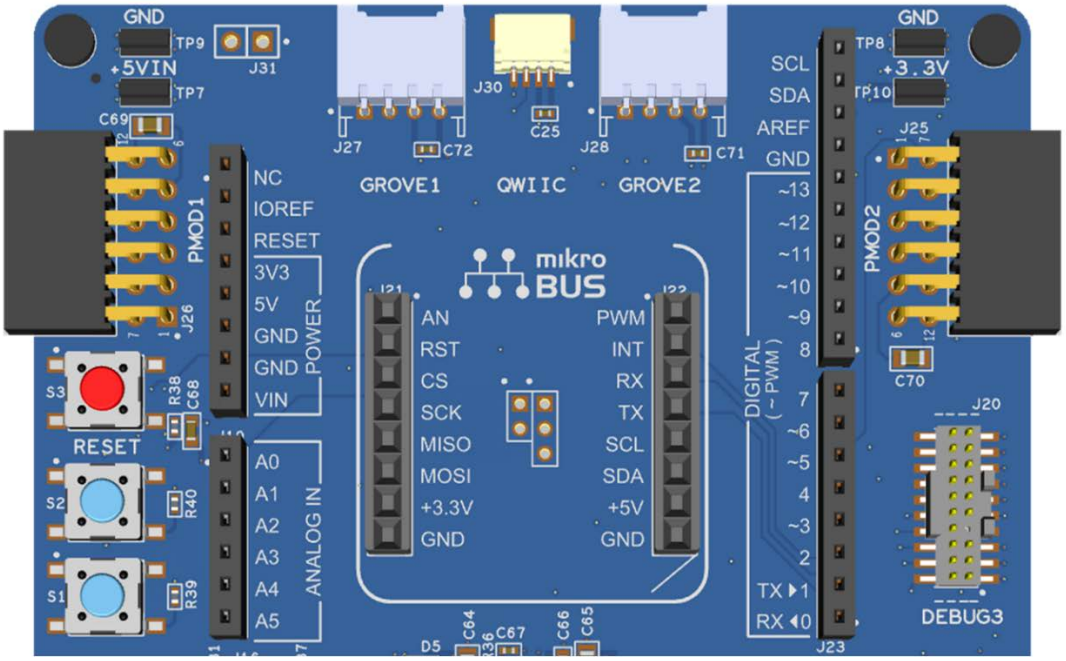

Figure 14. Arduino Uno Connectors

5.3.5 MikroElektronika™ mikroBUS Connector

In the center of the System Control and Ecosystem Access area is a mikroBUS compatible connector interface. This interface is compliant with mikroBUS Standard Specifications revision 2.00.

Table 17. mikroBUS Connections

mikroBUS Connector		**EK-RA6E2**
Pin	**Description**	**Signal/Bus**
J21-1	AN (Analog)	P000 (AN000)
J21-2	RST (Reset)	P408
J21-3	CS (SPI Chip Select)	P301 (SSLA0)
J21-4	SCK (SPI Clock)	P111 (RSPCKA)
J21-5	MISO	P110 (MISOA)
J21-6	MOSI	P109 (MOSIA)
J21-7	+3.3 V	+3.3V
J21-8	GND	GND
J22-1	PWM	P403 (GTIOC3A)
J22-2	INT (Hardware Interrupt)	P105 (IRQ0)
J22-3	RX (UART Receive)	P410 (RXD0)
J22-4	TX (UART Transmit)	P411 (TXD0)
J22-5	SCL (I3C Clock)	P100/P205 (SCL)
J22-6	SDA (I3C Data)	P101/P206 (SDA)
J22-7	+5 V	+5V
J22-8	GND	GND

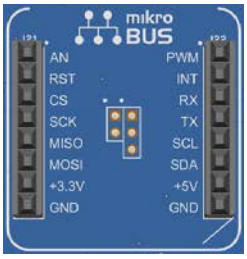

Figure 15. mikroBUS Connection

5.4 Connectivity

5.4.1 USB Full Speed

The USB micro-AB connection jack (J11) connects the RA MCU USB Full Speed interface to an external USB interface, allowing communications for testing and use of the RA MCU firmware. This connection can be configured as a USB device.

Connect a USB type-A female to micro-B male cable to J11. USB device cables can be connected to the USB Full Speed port using this cable.

Table 18. USB Full Speed Connector

USB Full Speed Connector		EK-RA6E2
Pin	**Description**	**Signal/Bus**
J11-1	+5 VDC	P407/USBFS_VBUS
J11-2	Data-	USB_DM
J11-3	Data+	USB_DP
J11-4	USB ID, jack internal switch, cable inserted	NC
J11-5	Ground	GND

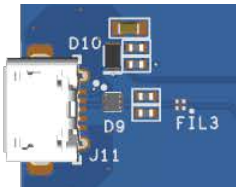

Figure 16. USB Full Speed Connector

5.4.2 I3C

The Arduino, mikroBUS, Grove, Qwiic, and Pmod 1 connectors connect the RA MCU I3C interface to external I3C or I^{2}C devices allowing communications between devices.

The I3C pins on the RA device conflict with some of the QSPI pins. The QSPI can be disabled by setting J35 to **open**. When QSPI is in use, the board will automatically switch to using I^{2}C lines. Please ensure that J6 or P208, and E63 are set correctly to enable pullup resistors R11 and R41 when I^{2}C is in use or disable pullups when I3C is in use. The required configurations can be seen in Table 19 where “x” means the setting doesn’t matter.

Table 19. I^{2}C/I3C Pullup Configuration

E63	P208	J7	R11/R41 enabled.
Closed	High	x	Yes
Closed	Low	x	No
Open	x	Open	Yes
Open	x	Closed	No

5.5 Miscellaneous

5.5.1 User and Power LEDs

Five LEDs are provided on the EK-RA6E2 board.

Behavior of the LEDs on the EK-RA6E2 board is described in the following table.

Table 20. EK-RA6E2 Board LED Functions

Designator	Color	Function	MCU Control Port
LED1	Blue	User LED	P207
LED2	Green	User LED	P400
LED3	Red	User LED	P113
LED4	White	Power on indicator	+3.3V

LED5	Yellow	Debug LED	J-Link OB MCU

The user LEDs may be isolated from the main MCU so the associated ports can be used for other purposes. To separate LED1 from P207, trace-cut jumper E27 must be open. To separate LED2 from P400, trace-cut jumper E26 must be open. To separate LED3 from P113, trace-cut jumper E28 must be open.

Figure 17. User LEDs

Figure 18. Power LED

5.5.2 User and Reset Switches

Three miniature, momentary, mechanical push-button type SMT switches are mounted on the EK-RA6E2 board.

Pressing the reset switch (S3) generates a reset signal to restart the RA MCU.

Table 21. EK-RA6E2 Board Switches

Designator	Function	MCU Control Port	Button Color
S3	MCU Reset Switch	RESET#	Red
S2	User Switch	P304 (IRQ9)	Blue
S1	User Switch	P005 (IRQ10-DS)	Blue

The User Switches S1 and S2 may be isolated from the main MCU, so the associated ports can be used for other purposes. To separate S1 from P005, trace-cut jumper E31 must be open. To separate S2 from P304, trace-cut jumper E32 must be open.

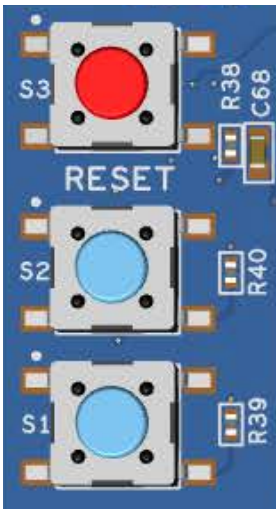

Figure 19. Reset and User Switches

5.5.3 MCU Boot Mode

A two-pin header (J16) is provided to select the Boot mode (P201) of the RA MCU. For normal operation, or Single-Chip mode, leave J16 open. To enter SCI Boot mode or USB Boot mode, place a jumper on J16.

Figure 20. Boot Mode

Note: The RA MCU fitted to the EK-RA6E2 board may not contain the latest version of the on-chip boot firmware.

5.5.4 Crystals

If the main high-precision crystal oscillator is not needed, then the ports that it is connected to can be used for other purposes.

Table 22. Main 20 MHz Crystal Selection

20MHz Crystal Oscillator	Setting
Required	E68 and E69 closed, E70 and E71 open
Not required	E68 and E69 open, E70 and E71 closed. P212 and P213 are available for other purposes

6. Special Feature Access Area

The Special Feature Access area provides features specific to the RA6E2 MCU group such as Quad-SPI Flash and CAN.

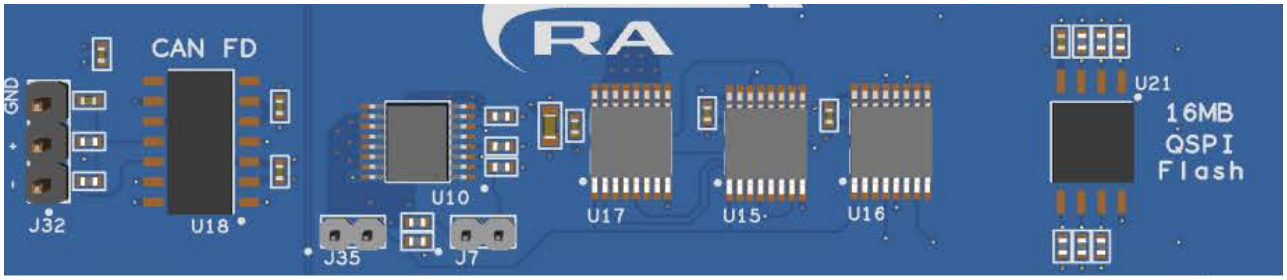

Figure 21. Special Feature Access Area

6.1 Quad-SPI Flash

The EK-RA6E2 board features a 128 Mb (16 MB) Quad-SPI serial flash memory (AT25SF128A-SHB-T). The Quad-SPI serial flash device (U21) connects to the Quad-SPI peripheral on the RA MCU and defaults to standard SPI mode initially. The flash memory is enabled for XIP (Execute-in-place) mode directly after power-on.

Table 23. Quad-SPI Flash Port Assignments

Quad-SPI Signal Description	EK-RA6E2 Port
Quad-SPI CS#	P112
Quad-SPI CLK	P100
Quad-SPI DQ0	P102
Quad-SPI DQ1	P101
Quad-SPI DQ2	P104
Quad-SPI DQ3	P103

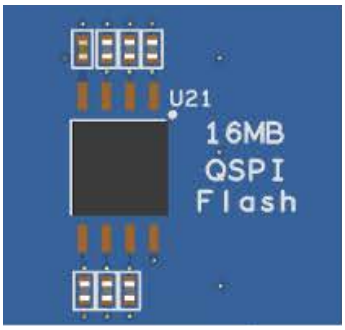

Figure 22. Quad-SPI Flash

Note: Some of the QSPI pins on the RA device conflict with the I3C lines. Use of QSPI can be enabled by setting J35 to **closed**. When QSPI is in use, the board will automatically switch to using I²C lines. Please ensure that J7 or P208, and E63 are set correctly to enable I²C Pullups. The required configurations can be seen in Table 19, I²C/I3C Pullup Configuration.

6.2 CAN Bus

The EK-RA6E2 board provides a CAN bus transceiver (TJA1043T,118) that is connected directly to the RA MCU. External connection to the CAN bus is made using the 0.1" pitch 3-pin male header J32.

Table 24. CAN Bus Assignments

CAN Signal Description	EK-RA6E2 Port
RXD	P402
TXD	P401

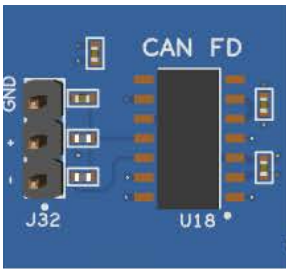

Figure 23. CAN Bus

Table 25. CAN Connector Pin Assignments

J32 Pin	Function
1	CANL
2	CANH
3	GND

6.3 Muliplexed Features

The EK-RA6E2 supports some features that are not able to be used simultaneously in the design. To swap between these features, jumper J35 has been provided. This jumper controls three electronic switch devices U15, U16 and U17 that can be found in the Special Features Access area.

An additional electronic switch device U10, controlled by J7, is also present to enable termination resistors to be optionally connected for I3C support.

Please refer to section 6.1 and 5.4.2 for details of the functionality of J7 and J35.

7. MCU Native Pin Access Area

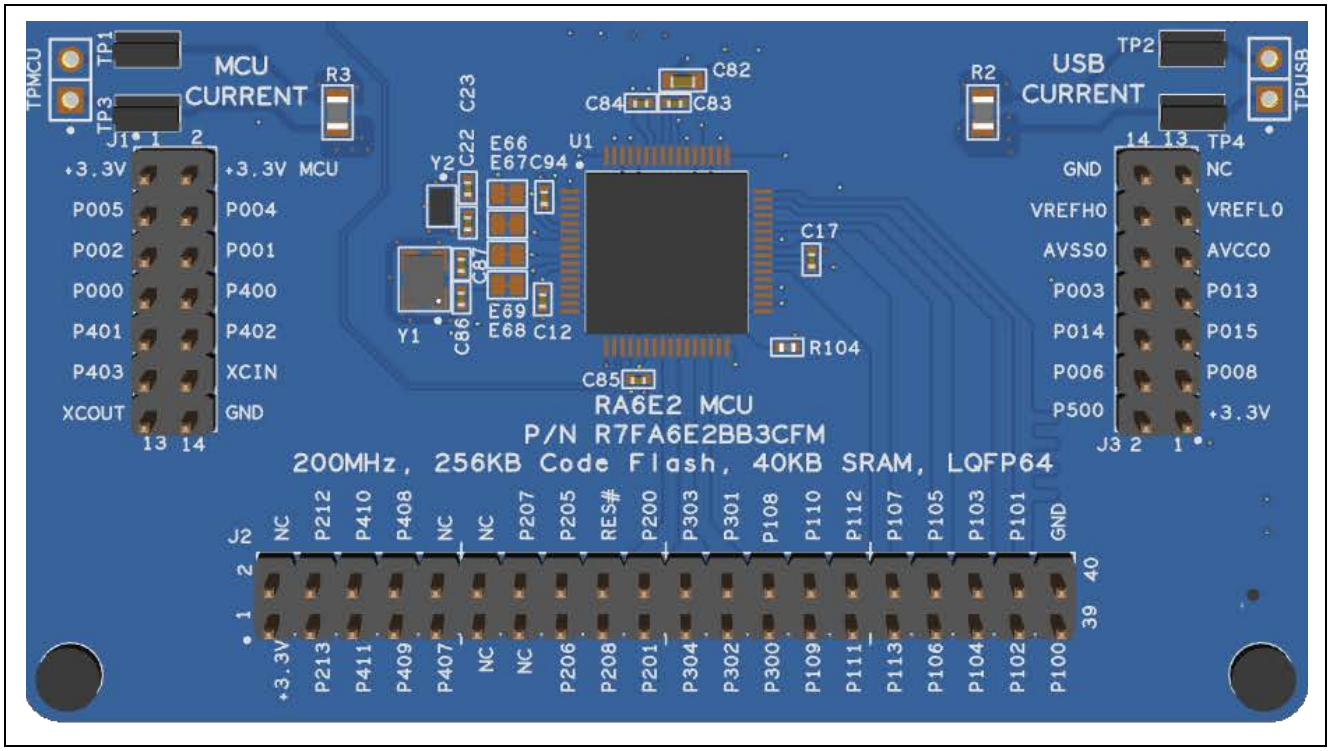

Figure 24. Native Pin Access Area

7.1 Breakout Pin Headers

The EK-RA6E2 board pin headers, J1, J2, and J3, provide access to all RA MCU interface signals, and to voltages for all RA MCU power ports. Each header pin is labelled with the voltage or port connected to that pin. Refer to the RA6E2 MCU Group User's Manual for details of each port function, and the EK-RA6E2 board schematic for pin header port assignments.

The placement of the breakout pin headers allows for a standard 2.54 mm (0.100") center breadboard to be placed on all four pin headers simultaneously. This can be used for prototyping and testing of custom circuitry for use with the RA6E2 MCU.

7.2 MCU and USB Current Measurement

Included in the Native Pin Access area are current measurement resistors and test points to measure the MCU USB controller current and the MCU core power current.

The EK-RA6E2 board provides precision 5 mΩ resistors (Vishay, part number WSLP08055L000FEA18) for current measurement of the main 3.3 V MCU power and the 3.3 V USB MCU power. Measure the voltage drop across these resistors and use Ohm's law to calculate the current. For convenience, TP1 and TP3 are provided to measure the main 3.3 V MCU power, and TP2 and TP4 are provided to measure the 3.3 V USB MCU power. See Figure 26 for the locations of TP1, TP3, TP2 and TP4.

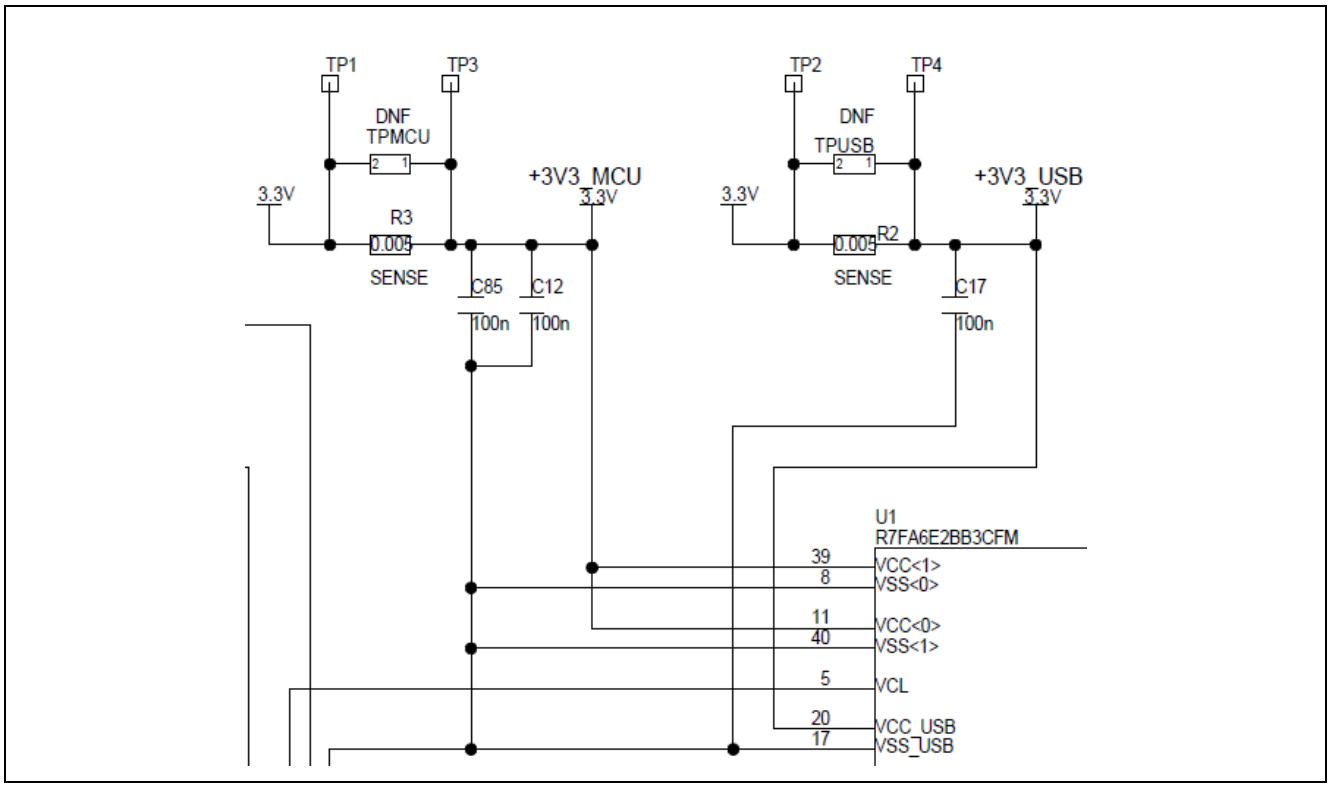

Figure 25. RA +3.3 V Current Measurement Circuit

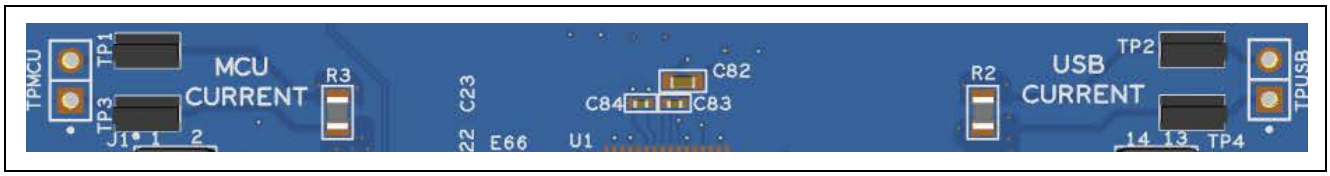

Figure 26. RA MCU Current Measurement

8. Certifications

The EK-RA6E2 v1 kit meets the following certifications/standards. See page 4 of this user's manual for the disclaimer and precautions.

8.1 EMC/EMI Standards

- FCC Notice (Class A)

  This device complies with part 15 of the FCC Rules. Operation is subject to the following two conditions: (1) This device may not cause harmful interference, and (2) this device must accept any interference received, including interference that may cause undesired operation.

  NOTE- This equipment has been tested and found to comply with the limits for a Class A digital device, pursuant to Part 15 of the FCC Rules. These limits are designed to provide reasonable protection against harmful interference in a residential installation. This equipment generates, uses and can radiate radio frequency energy and, if not installed and used in accordance with the instructions, may cause harmful interference to radio communications. However, there is no guarantee that interference will not occur in a particular installation. If this equipment does cause harmful interference to radio or television reception, which can be determined by turning the equipment off and on, the user is encouraged to try to correct the interference by one or more of the following measures:

  — Reorient or relocate the receiving antenna.
  — Increase the separation between the equipment and receiver.
  — Connect the equipment into an outlet on a circuit different from that to which the receiver is connected.
  — Consult the dealer or an experienced radio/television technician for help.
- Innovation, Science and Economic Development Canada ICES-003 Compliance:
  CAN ICES-3 (A)/NMB-3(A)
- CE Class A (EMC)

  This product is herewith confirmed to comply with the requirements set out in the Council Directives on the Approximation of the laws of the Member States relating to Electromagnetic Compatibility Directive 2014/30/EU.

  Warning – This is a Class A product. In a domestic environment this product may cause radio interference in which case the user may be requried to take adequate measures to correct this interference.
- UKCA Class A (EMC)

  This product is in conformity with the following relevant UK Statutory Instrument(s) (and its amendments): 2016 No. 1091 Electromagnetic Compatibility Regulations 2016.

  Warning – This is a Class A product. In a domestic environment this product may cause radio interference in which case the user may be requried to take adequate measures to correct this interference.
- Taiwan: Chinese National Standard 13438, C6357 compliance, Class A limits
- Australia/New Zealand AS/NZS CISPR 32:2015, Class A

8.2 Material Selection, Waste, Recycling and Disposal Standards

- EU RoHS
- China SJ/T 113642014, 10-year environmental protection use period.

8.3 Safety Standards

- UL 94V-0

9. Design and Manufacturing Information

The design and manufacturing information for the EK-RA6E2 v1 kit is available in the "EK-RA6E2 v1 Design Package" available on renesas.com/ra/ek-ra6e2.

- Design package file name: ek-ra6e2-v1-designpackage.zip
- Design package contents

Table 26. EK-RA6E2 Board Design Package Contents

File Type	Content	File/Folder Name
File (PDF)	Schematics	ek-ra6e2-v1-schematics
File (PDF)	Mechanical Drawing	ek-ra6e2-v1-mechdwg
File (PDF)	3D Drawing	ek-ra6e2-v1-3d
File (PDF)	BOM	ek-ra6e2-v1-bom
Folder	Manufacturing Files	Manufacturing Files
Folder	Design Files	Design Files-Cadence Allegro

10. Website and Support

Visit the following URLs to learn about the kit and the RA family of microcontrollers, download tools and documentation, and get support.

EK-RA6E2 Resources	renesas.com/ra/ek-ra6e2
RA Kit Information	renesas.com/ra/kits
RA Product Information	renesas.com/ra
RA Product Support Forum	renesas.com/ra/forum
RA Videos	renesas.com/ra/videos
RA Kit Feedback and Feature Request	renesas.com/ra/kitfeedback
Renesas Support	renesas.com/support

Provide Feedback/Request a Feature

Renesas aims to provide the best microcontroller kit experience to help our customers jumpstart innovation and take products to market faster with the RA family of microcontrollers. The Renesas RA microcontroller kits have been designed with a lot of attention to detail and customer-centered thinking in every aspect of the design. Renesas aims to exceed customer expectation.

Renesas looks forward to hearing your feedback and learning how we can enhance your experience. Please share your feedback at renesas.com/ra/kitfeedback.

Revision History

Rev.	Date	Description	
		Page	Summary
1.00	Jul.13.22	—	Initial release
2.00	Feb.14.23	—	Updated for ES release
3.00	Mar.01.23	—	Updated for MP release

EK-RA6E2 v1 – User's Manual

Publication Date: Mar.01.23

Published by: Renesas Electronics Corporation

EK-RA6E2 v1 – User's Manual

Renesas Electronics Corporation

R20UT5177EG0300