ISL29501-ST-EV1Z

Sand Tiger Evaluation Board

The ISL29501-ST-EV1Z is a distance measurement reference design. It combines the ISL29501 chip with an OSRAM SFH 4550 IR emitting LED and OSRAM SFH 213FA photodiode. The circuit board is enclosed in an opaque plastic chassis designed to optically isolate components. Included is a USB flash drive containing the evaluation software for a PC and related technical documents.

The ISL29501-ST-EV1Z board also allows quick evaluation of the ISL29501 performance for a 2m sensing system.

Specifications

This board is configured and optimized for the following operating conditions:

- Micro USB 2.0 connection
- V_{IN} = 5V (USB Power)
- I_{DD} maximum = 225mA
- P optical maximum = 70mW
- Wavelength = 860nm
- Optical duty cycle maximum = 50%
- Emission angle = ±3°
- Coherent light - No

Features

- Self contained measurement system
- Enables proximity detection and distance measurement
- Emitter DAC with programmable current up to 255mA
- Operates in continuous or single shot mode
- On-chip active ambient light rejection
- Regulated power 2.7V to 3.3V USB or external supply
- I^2C interface supporting 1.8V and 3.3V bus

Contents

The following items are shipped with board:

- USB cable
- Software
- Technical documentation

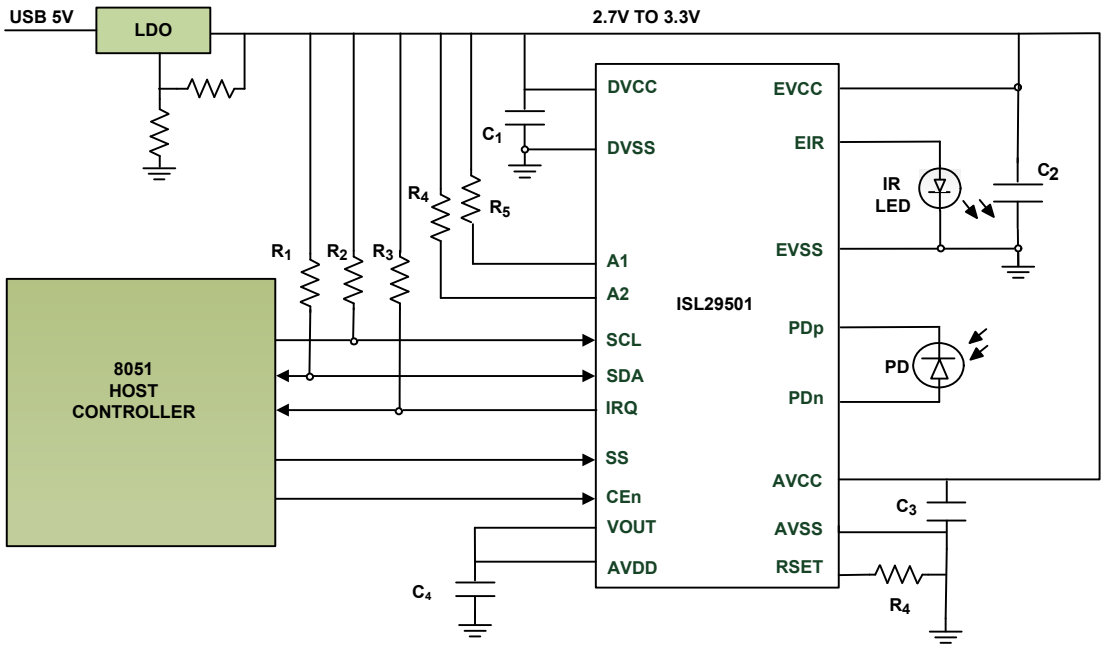

Figure 1. Sand Tiger Block Diagram

© 2015-2022 Renesas Electronics

Contents

1. Functional Description . . . 3
1.1 Operating Features . . . 3
1.1.1 External Power Supply . . . 3
1.1.2 External Microprocessor . . . 3
1.1.3 System Calibration . . . 3
1.1.4 Calibrating Sand Tiger . . . 3
1.2 Operating Range . . . 4
1.3 Quick Start Guide . . . 4
1.4 Changing Settings . . . 4
1.5 Sand Tiger Enclosure . . . 5
2. Board Design . . . 5
2.1 PCB Layout Guidelines . . . 6
2.2 Sand Tiger Schematics . . . 7
2.2.1 Control Sheet . . . 7
2.2.2 ISL29501 and Power . . . 8
2.3 Bill of Materials . . . 9
2.3.1 ISL29501-ST-EV1Z . . . 9
2.3.2 Chassis . . . 11
2.4 Board Layout . . . 12
3. Typical Performance Curves . . . 16
3.1 Temperature Performance . . . 16
4. Ordering Information . . . 16
5. Revision History . . . 16

1. Functional Description

The ISL29501-ST-EV1Z is both a reference design and evaluation board that provides a single platform to evaluate the features of the ISL29501. The ISL29501-ST-EV1Z circuit board and supplied enclosure deliver maximum electrical and optical performance.

The system sends out light pulses through the emitter LED and receives returned light pulses that reflected off a target. The difference in phase of the emitted signal and the return signal is converted to distance by the ISL29501 and is graphed in the evaluation software. The magnitude of the return signal is graphed as well. This and additional data is available in chip registers, see *UG054, ISL29501 Evaluation Software Manual* for additional details.

1.1 Operating Features

The ISL29501-ST-EV1Z evaluation board is shown in Figure 4 and Figure 5. The hardware enable function is controlled by a software switch, which can be overridden shorting J9 pins 1 and 2. See the schematic for details. A Power-Good (PG) LED indicates that the LDO is regulating properly.

1.1.1 External Power Supply

For high current/high duty cycle setups, USB power may not be able to power the board. In the default condition, jumper J10 shorts pins 1 and 2 to connect to USB power to the LDO. To power the board with an external power supply, remove this jumper and connect the positive (+) terminal to J10-2 and the negative (-) to J10-4.

If you want to bypass the LDO and power the ISL29501 directly with a power supply, remove the jumper on J10. Use J10-4 for your ground connection and apply the positive voltage to TP7.

1.1.2 External Microprocessor

For debug of customer written software, it might be useful to connect the Sand Tiger to a different microprocessor. The I^2C pins SCL and SDA are available on pins J4-4 and J4-3, respectively. The remaining support pins are available on J5: SS - J5-4, IRQ - J5-3, and CEn - J5-2. The support pins are generally connected to GP pins on the microprocessor. SCL and SCL are compatible with 1.8V microprocessors but unfortunately the support pins require 3V signaling.

1.1.3 System Calibration

Before meaningful measurements can be made, the calibration registers in the chip need to be loaded. This can be done in two ways. The first is to load a profile that contains data into the GUI. This could be one of the Renesas provided profiles or one that was saved previously by the user. See *UG054, ISL29501 Evaluation Software Manual* for further details. The second is to calibrate the board directly.

1.1.4 Calibrating Sand Tiger

There are three separate standard calibrations that need to be executed to calibrate the system. These are magnitude, crosstalk, and distance calibrations.

1.1.4.1 Magnitude Calibration

Magnitude calibration is done after the emitter current and duty cycle settings are programmed. It is a dark (no light) calibration that takes less than 1s to run. Run this calibration from the GUI.

1.1.4.2 Crosstalk calibration

Crosstalk is defined as a signal that reaches the ISL29501 chip directly without bouncing off the target. This can be electrical or optical. At close range and large return signal values, crosstalk has a minor impact on distance measurements. At the far end of the distance range, the crosstalk might exceed the signal, adding error to measurements.

For this calibration, the user makes a distance measurement with the return signal blocked from reaching the photodiode. This can be done in two ways. The first is to cover the emitter or photodiode optically preventing any of the emitted signal from reaching the photodiode. The second is to point the board toward infinity so there is no return signal. Care must be taken since small amounts of signal are returned by objects up to 4 meters away. The emitting angle of the light is ±3° so you must be sure that there are no objects within this cone when doing this calibration.

Because the chip sees none of the emitted signal, anything received is crosstalk. Run this calibration from the GUI after running Magnitude calibration.

1.1.4.3 Distance Calibration

Variation in delay of emitters, photodiodes, and the ISL29501 changes the signal path delay. To compensate for this, a reference point at a known distance needs to be established. This reference is calculated during distance calibration. The process involves making a distance measurement at a known distance. While it is not critical it is best to use a reference distance about 25% of the intended range. The GUI writes the correct registers that establish the reference distance inside the chip.

It is important that there are no objects inside the ±3° emitting angle other than the target.

When these calibration registers are written, all succeeding distance has this value subtracted real time from the measured value. Run this calibration from the GUI after running crosstalk calibration. See *UG054, ISL29501 Evaluation Software Manual* for details on how to run the calibrations in the GUI.

1.2 Operating Range

The circuit board contains an LDO to convert the input voltage to the ISL29501 operating voltage range, 2.7V - 3.3V. By default the board is configured for USB power but can be alternately powered by an external power supply. The LDO resistors are ratioed to create a 3.0V power rail. All other set-up conditions can be configured through the chip registers and evaluation software.

1.3 Quick Start Guide

To start making distance measurements follow these simple steps.

1. Plug the USB cable into the reference design and the PC.
2. Point the emitter toward the desired target.
3. Double click **TOF.exe** to start the GUI.
4. From the GUI click on **File** -> **Load Profile** -> **filename** to load safe initial register settings and calibration data.
5. Click either **Start** or **Step** to begin making distance measurements.

1.4 Changing Settings

When the board is running and making measurements, the user may want to change settings. The user has the ability to change any of the chip registers with the evaluation software, see *UG054, ISL29501 Evaluation Software Manual* for details. **Important:** If the pulse duty cycle or the emitter current is changed, the user must redo the standard calibrations. This process is described in the sections under Calibrating Sand Tiger.

1.5 Sand Tiger Enclosure

The Sand Tiger chassis allows easy handling of the board to make distance measurements. The threaded hole fits most camera tripod screws, which create a stable mount for precision measurements and characterization. The holes in the top isolates the emitter and photodiode to minimize optical crosstalk. The chassis top connects to the bottom with an interference fit. It is snug but the two can be easily separated by hand. Two threaded 4-40 holes are provided to allow attachment of glass. Shown on the side are a micro USB that connects to a PC to run the evaluation software and the power-good LED.

Figure 2. Sand Tiger Chassis

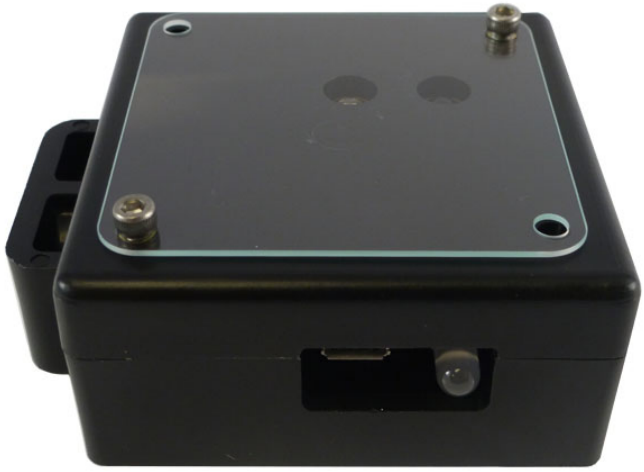

Figure 3. Sand Tiger Chassis with Glass

2. Board Design

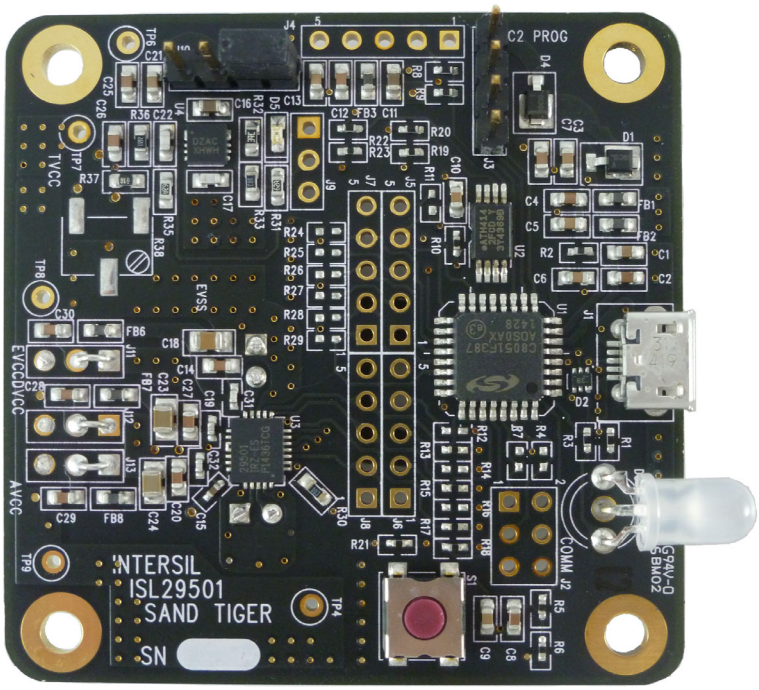

Figure 4. Sand Tiger Board (Top Side)

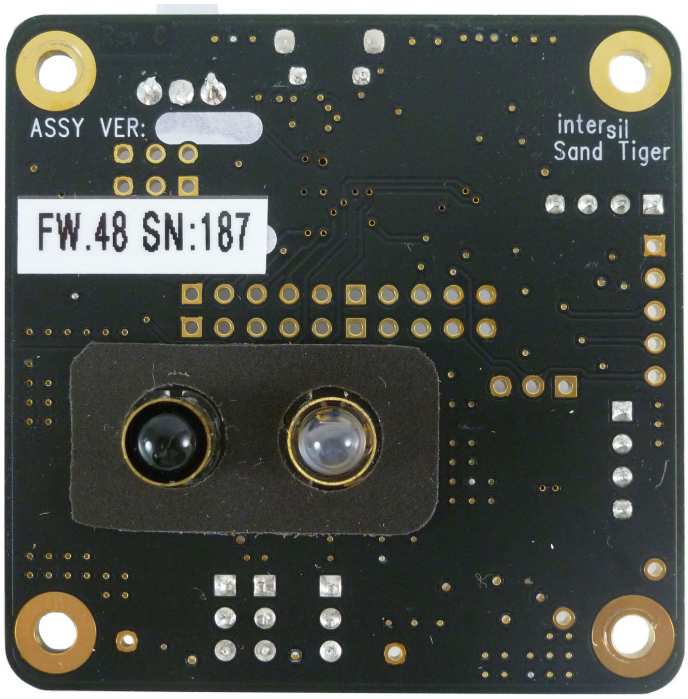

Figure 5. Sand Tiger Board (Bottom Side)[1]

1. Visible on the bottom side of the board are the emitter LED and photodiode. Each is surrounded by a brass tube. These tubes are grounded and serve as terminators for any electric fields. They prevent crosstalk from the emitter to the photodiode.

2.1 PCB Layout Guidelines

The ISL29501-ST-EV1Z PCB layout has been optimized for electrical and thermal performance. Care needs to be placed in decoupling circuits and noise isolation. Sand Tiger follows good design techniques but additional suggestions are available in *AN1917, ISL29501 Layout Design Guide*.

2.2 Sand Tiger Schematics

2.2.1 Control Sheet

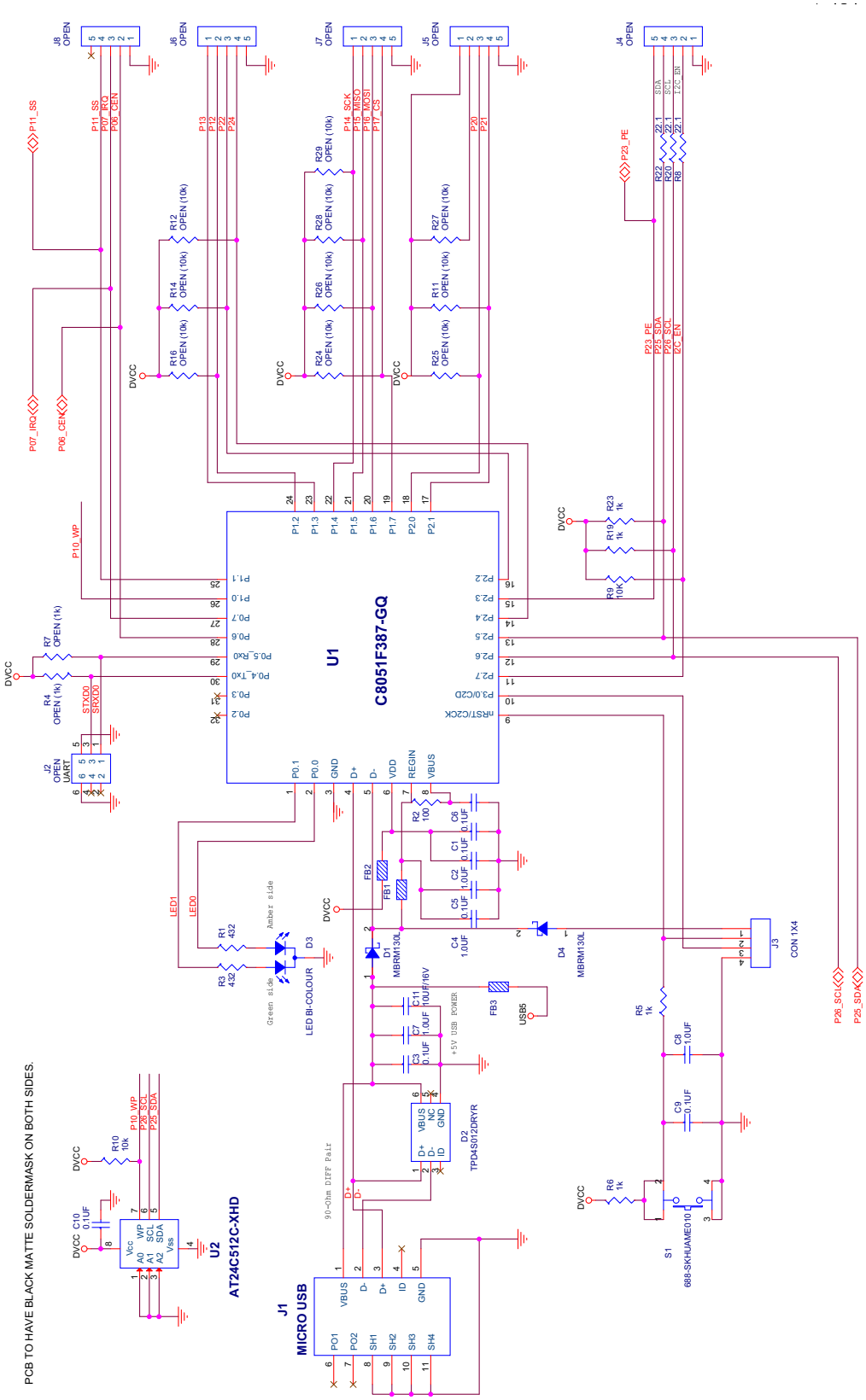

Figure 6. Sand Tiger Schematic Control Sheet

2.2.2 ISL29501 and Power

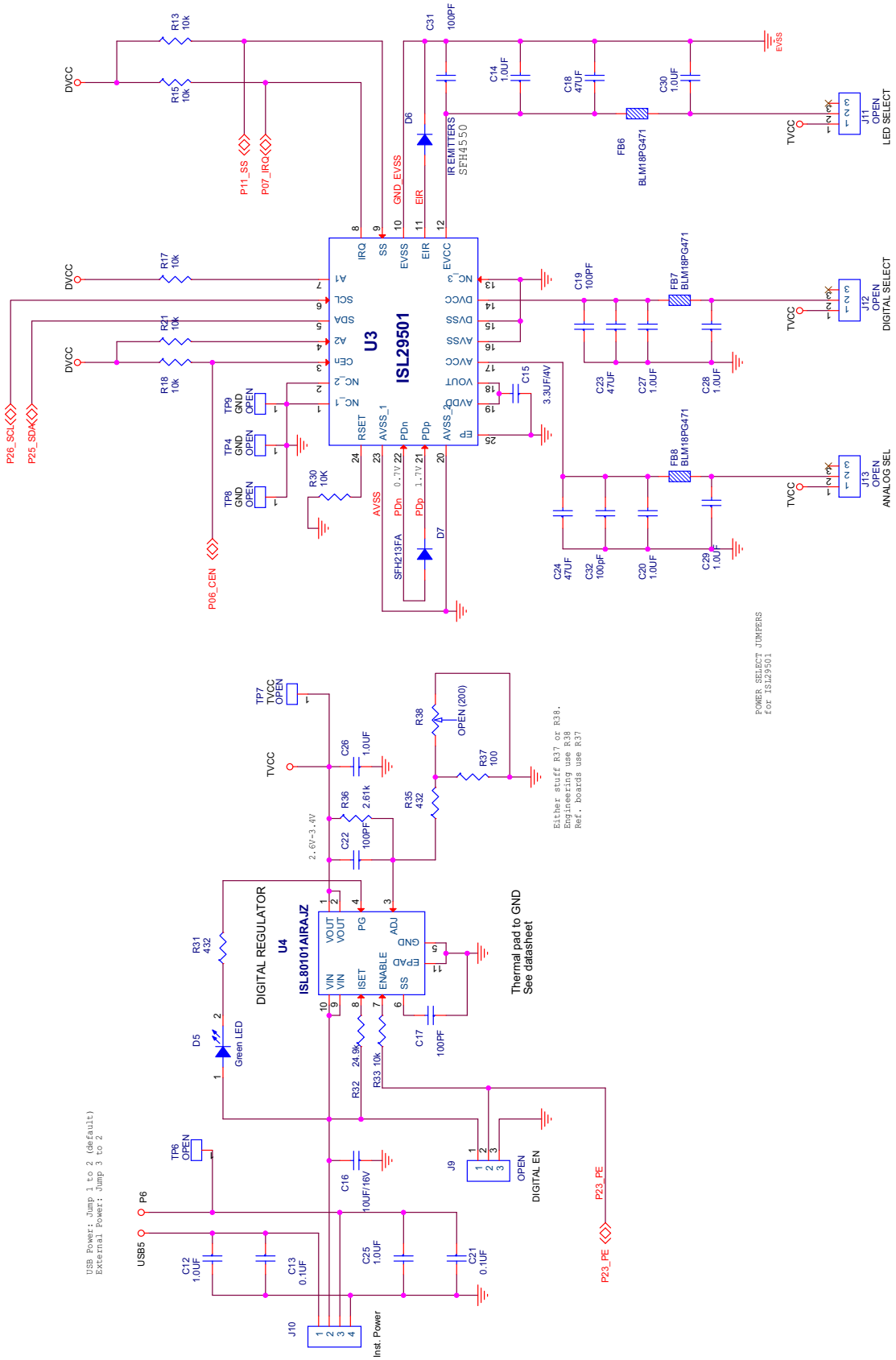

Figure 7. Sand Tiger Schematic - ISL29501 and Power

2.3 Bill of Materials

2.3.1 ISL29501-ST-EV1Z

Qty	Reference Designator	Description	Manufacturer	Manufacturer Part
1		PWB-PCB-ISL29501-ST-EV1Z, REVC, ROHS	TBD	ISL29501-ST-EV1ZREVCPCB
3	C19, C31, C32	CAP, SMD, 0402, 100pF, 16V, 10%, NP0, ROHS	AVX	0402YA101KAT2A
1	C15	CAP, SMD, 0402, 3.3µF, 4V, 20%, X5R, ROHS	TAIYO YUDEN	AMK105BJ335MV-F
2	C17, C22	CAP, SMD, 0603, 100pF, 50V, 5%, C0G, ROHS	PANASONIC	ECJ-1VC1H101J
8	C1, C3, C5, C6, C9, C10, C13, C21	CAP, SMD, 0603, 0.1µF, 25V, 10%, X7R, ROHS	MURATA	GRM188R71E104KA01D
13	C2, C4, C7, C8, C12, C14, C20, C25, C26, C27, C28, C29, C30	CAP, SMD, 0603, 1.0µF, 10V, 10%, X7R, ROHS	AVX	0603ZC105KAT2A
2	C11, C16	CAP, SMD, 0603, 10µF, 16V, 10%, X5R, ROHS	MURATA	GRM188R61C106KAALD
3	C18, C23, C24	CAP, SMD, 0805, 47µF, 10V, 20%, X5R, ROHS	TDK	C2012X5R1A476M125AC
1	J1	CONN-RECEPTACLE, USB-MICRO B, SMD, 5 CONTACT, R/A, ROHS	MOLEX	1050170001
2	J3, J10	CONN-HEADER, 1x4, BRKAWY 1x36, 2.54mm, ROHS	BERG/FCI	68000-236HLF
3	J11-Pins1-2, J12-Pins1-2, J13-Pins1-2 ONLY	CONN-JUMPER, SOLDER SHORT,		
1	J10-Pins 1-2	CONN-JUMPER, SHORTING, 2PIN, BLACK, GOLD, ROHS	SULLINS	SPC02SYAN
2	D1, D4	DIODE-SCHOTTKY, 30V, 1A, SMD, 2P, DO-216AA, ROHS	ON SEMICONDUCTOR	MBRM130LT1G
1	D5	LED, SMD, 0603, GREEN CLEAR, 2V, 20mA, 574nm, 35mcd, ROHS	LITEON/VISHAY	LTST-C191KGKT
1	D6	LED-EMITTER IR, TH, T1 3/4, 1.5V, 100mA, 850nm, ROHS	OSRAM	SFH4550
1	D3 - *Leads should stand approximately two tenths off board and part is bent to right side before being soldered.	LED, TH, RND, 5mm, GREEN/RED, 2.1V/2V, 10mA, 10mcd/6.3mcd, ROHS	ROHM	SPR-54MVWF
6	FB1, FB2, FB3, FB6, FB7, FB8	FERRITE BEAD, SMD, 0603, 470Ω, 1A, 200mΩ, ROHS	MURATA	BLM18PG471SN1D
1	U2	IC-2-WIRE SERIAL EEPROM, 8P, TSSOP, 1MHz, 512kBIT, ROHS	ATMEL	AT24C512C-XHD
1	U1	C-USB MICROCONTROLLER, 32P, LQFP, 8BIT, 48MIPS, ROHS	SILICON LABORATORIES	C8051F387-GQ

Qty	Reference Designator	Description	Manufacturer	Manufacturer Part
1	U3	IC-TOF SIGNAL PROCESSOR, 24P, QFN, ROHS	INTERSIL	ISL29501IRZ-T7
1	U4	IC-1A LDO ADJ.VOLT REGULATOR, 10P, DFN, 3x3, ROHS	INTERSIL	ISL80101AIRAJZ
1	D2	IC-TVS, 4-CHANNEL ESD SOLUTION, 6P, SON6, ROHS	TEXAS INSTRUMENTS	TPD4S012DRYR
1	R2	RES, SMD, 0402, 100Ω, 1/16W, 1%, TF, ROHS	VENKEL	CR0402-16W-1000FT
4	R5, R6, R19, R23	RES, SMD, 0402, 1k, 1/16W, 1%, TF, ROHS	VENKEL	CR0402-16W-102JT
7	R9, R10, R13, R15, R17, R18, R21	RES, SMD, 0402, 10k, 1/16W, 1%, TF, ROHS	PANASONIC	ERJ-2RKF1002X
3	R8, R20, R22	RES, SMD, 0402, 22.1Ω, 1/16W, 1%, TF, ROHS	YAGEO	RC0402FR-0722R1L
2	R1, R3	RES, SMD, 0402, 432Ω, 1/16W, 1%, TF, ROHS	VENKEL	CR0402-16W-4320FT
0	R4, R7, R11, R12, R14, R16, R24, R25, R26, R27, R28, R29	RES, SMD, 0402, DNP, DNP, DNP, TF, ROHS		
1	R37	RES, SMD, 0603, 100Ω, 1/10W, 1%, TF, ROHS	VENKEL	CR0603-10W-1000FT
2	R30, R33	RES, SMD, 0603, 10k, 1/10W, 1%, TF, ROHS	VENKEL	CR0603-10W-1002FT
1	R32	RES, SMD, 0603, 24.9k, 1/10W, 1%, TF, ROHS	PANASONIC	ERJ-3EKF2492V
1	R36	RES, SMD, 0603, 2.61k, 1/10W, 1%, TF, ROHS	VENKEL	CR0603-10W-2611FT
2	R31, R35	RES, SMD, 0603, 432Ω, 1/10W, 1%, TF, ROHS	YAGEO	RC0603FR-07432RL(PbFREE)
1	S1	SWITCH-TACTILE, SMD, 6.3x6.2, 12V, 50mA, 2.6N, 260gf, ROHS	ALPS ELECTRIC INC	SKHUAME010
1	BAG & SHIP W/BOARD	CABLE-USB TYPE A MALE to TYPE MICRO-B MALE, 3FT, ROHS	QUALTEK ELECTRONICS	3025010-03
1	COMPLETED ASSEMBLY	PWB-ASSY, ISL29501-ST-EV1ZCHASSIS, ROHS	INTERSIL	ISL29501-ST-EZCHASSISBOM
1	Place assy in bag	BAG, STATIC, 5x8, ZIPLOC, ROHS	INTERSIL	212403-013
0	J2, J4, J5, J6, J7, J8, J9	DO NOT POPULATE OR PURCHASE		
0	R38	DO NOT POPULATE OR PURCHASE		
0	TP4, TP6, TP7, TP8 (5001)	DO NOT POPULATE OR PURCHASE		

Qty	Reference Designator	Description	Manufacturer	Manufacturer Part
1	AFFIX TO BACK OF PCB	LABEL-DATE CODE_LINE 1: YRWK/REV#, LINE 2: BOM NAME	INTERSIL	LABEL-DATE CODE
1	D7	IC-PHOTODIODE, RADIAL, 2P, 5mm, 50V, 900nm, 1nA, ROHS	OSRAM	SFH213-FA

2.3.2 Chassis

Qty	Reference Designator	Description	Manufacturer	Manufacturer Part
1	ASSY INSTRUCTIONS	PWB-FG, ISL29501-ST-EV1Z, ROHS	INTERSIL	ISL29501-ST-EV1ZFG
2	PCB TO CHASSIS BOTTOM	SCREW, 4-40x3/16in, SOCKET HEAD, CAP, SS, ROHS	MCMASTER-CARR	92185A105
1	SANDTIGER-CHASSISBOTTOM	CHASSIS BOTTOM, 2.5x2.5, ACETAL HOMOPOLYMER, BLK, ROHS	PROTOLABS	29501-01-08
1	SANDTIGER-CHASSISTOP	CHASSIS TOP, 2.5x2.5, ACETAL HOMOPOLYMER, BLK, ROHS	PROTOLABS	29501-02-05
1	D6, D7 (PCB) GASKET	GASKET-URETHANE FOAM, VERY FIRM, BLK, CUSTOM CUT 28.5x14.6mm	ROGERS CORP.	4701-60-20031-04
4	CHASSIS TOP, CHASSIS BOTTOM	HARDWARE, ULTRASERT II-LONG, 4-40, 0.219x0.172, BRASS, ROHS	DODGE INSERTS	6035-04BR219
1	CHASSIS BOTTOM SIDE HOLE	HARDWARE, ULTRASERT II-SHORT, 1/4-20, 0.30x0.375, BRASS, ROHS	DODGE INSERTS	6035-4BR300
0	a) Ensure J1 (USB connector) and D5 (LED) are facing the side opening in CHASSIS BOTTOM when PCB is mounted face down.	Instructions for assembly.	INTERSIL	ASSEMBLY INSTRUCTIONS
2	CHASSIS BOTTOM TO PCB	HARDWARE, DOWEL PIN, 3/4x1/8, STAINLESS, ROHS	MCMASTER-CARR	90145A473
2	D6, D7 (PCB)	TUBE-BRASS, Alloy#260/270, 1/2-3/4, Length 0.275, 0.25OD, 0.238ID	K&S Precision Metals	SANDTIGER-BRASSTUBE

2.4 Board Layout

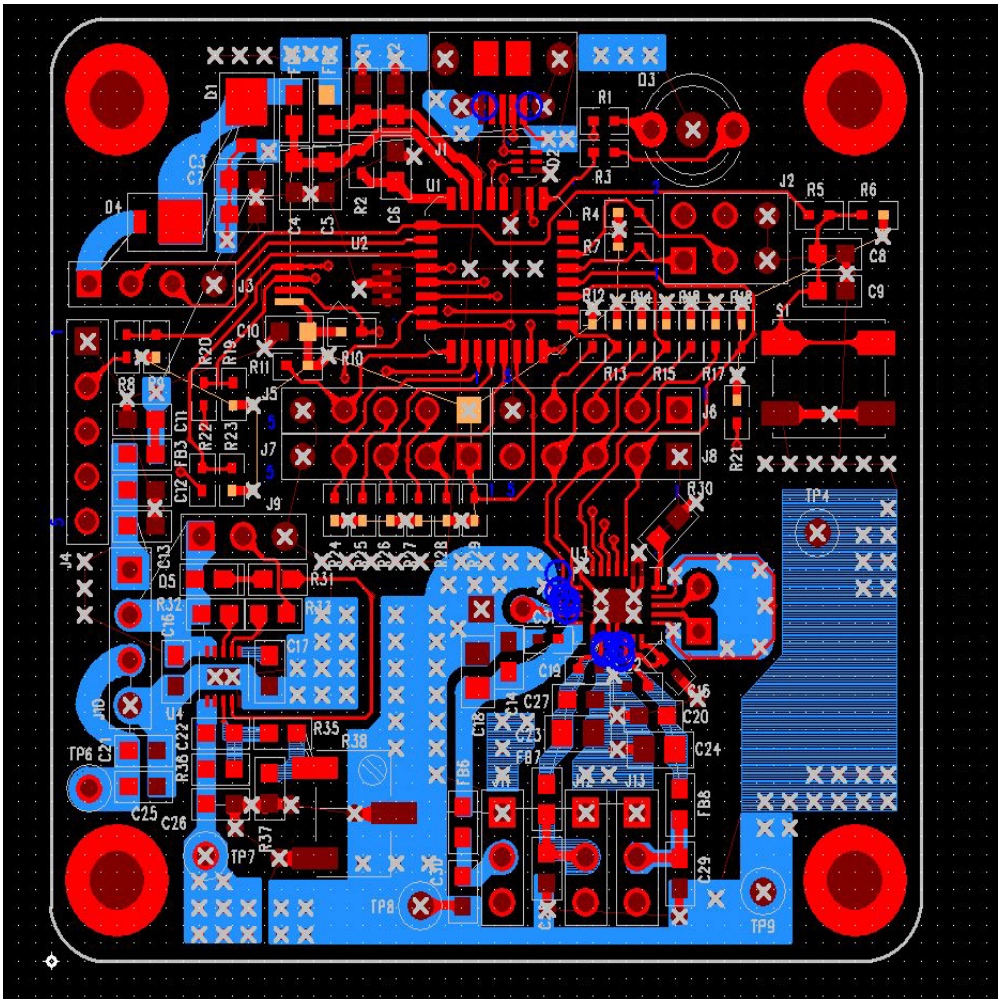

Figure 8. Top Layer

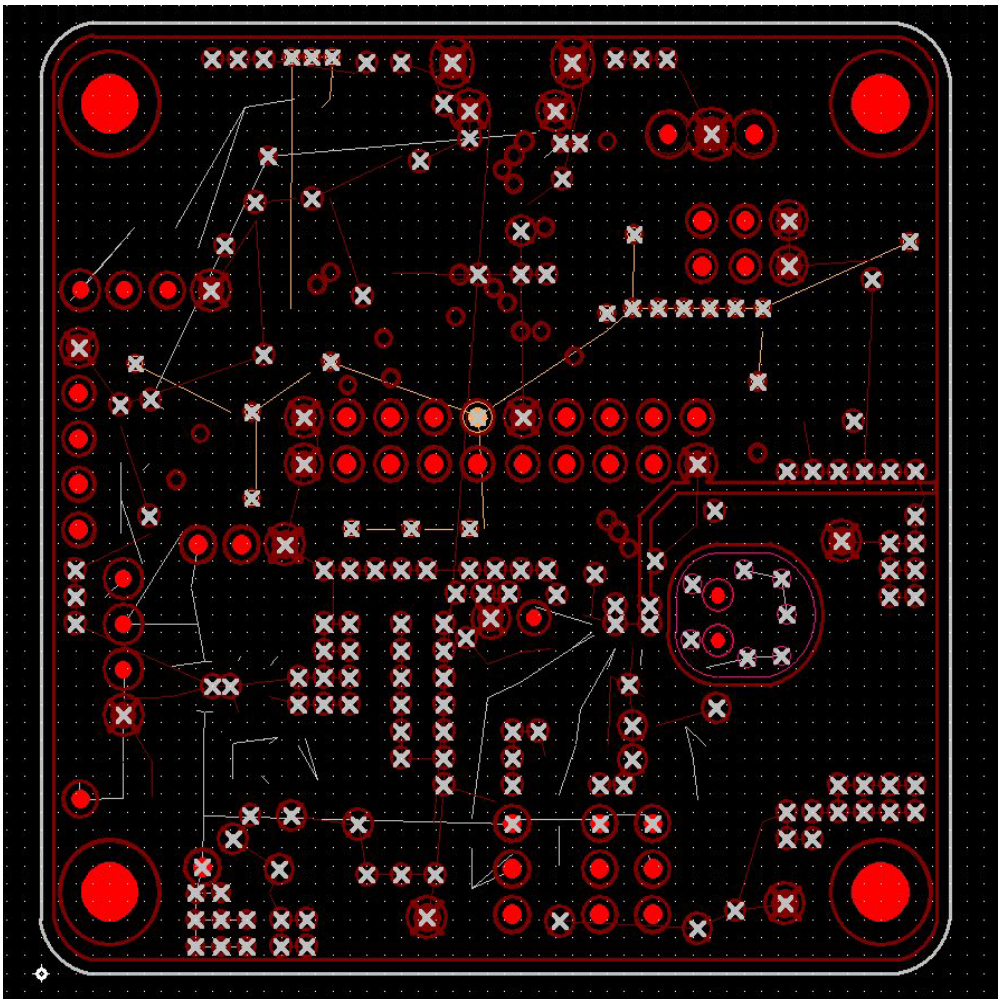

Figure 9. PCB – Layer 2 (Viewed from Top)

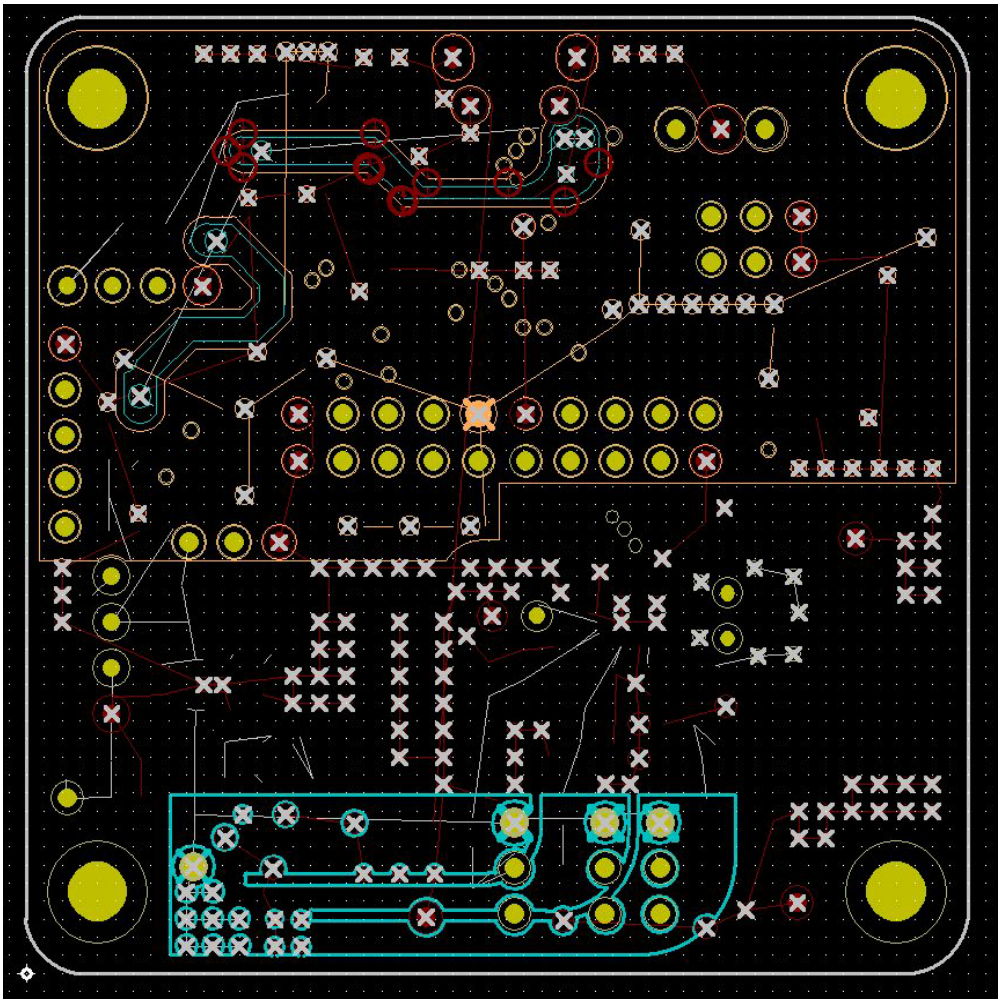

Figure 10. PCB – Layer 3 (Viewed from Top)

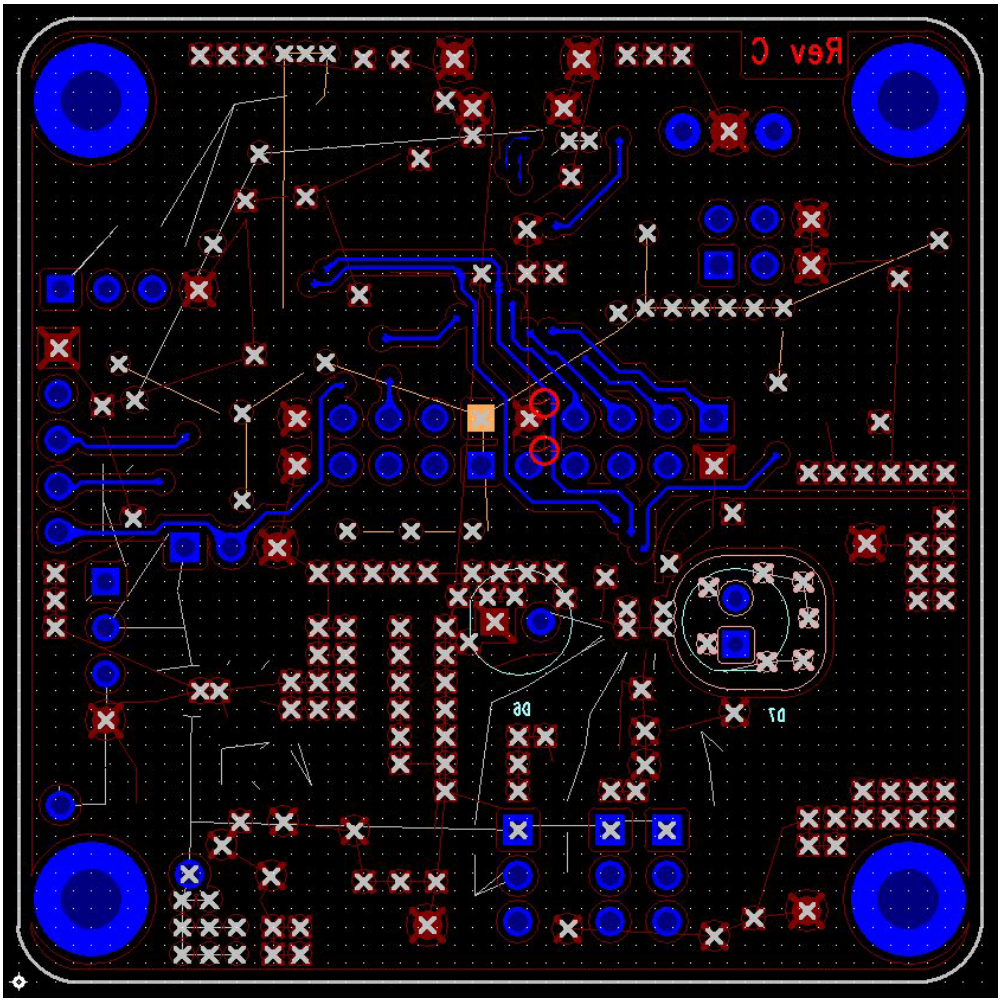

Figure 11. PCB – Bottom Layer (Viewed from Top)

The measured distance drifts with changes in temperature as shown in Figure 14. The ISL29501 has temperature compensation built into the chip. This is an advanced calibration, which involves collecting temperature vs. distance data and programming the compensation registers. Initially Renesas generates these coefficients from customer collected data. The process for collecting data is described in *AN1967, ISL29501 Temperature and Ambient Data Collection*.

Renesas strongly recommends that customers evaluate these parameters as a last step in their evaluation. To avoid temperature effects low integration times, reg 0x10 < 0x06 should be used.

3. Typical Performance Curves

USB Powered V_{IN} = 5V, V_{reg} = 3.3V, T_A = +25°C, Sample size = 5, integration time = 140ms.

Figure 12. Measured vs Actual Distance

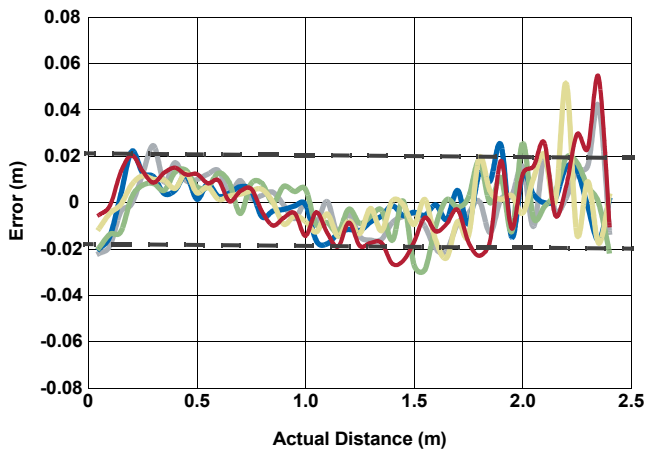

Figure 13. Error vs Actual Distance

3.1 Temperature Performance

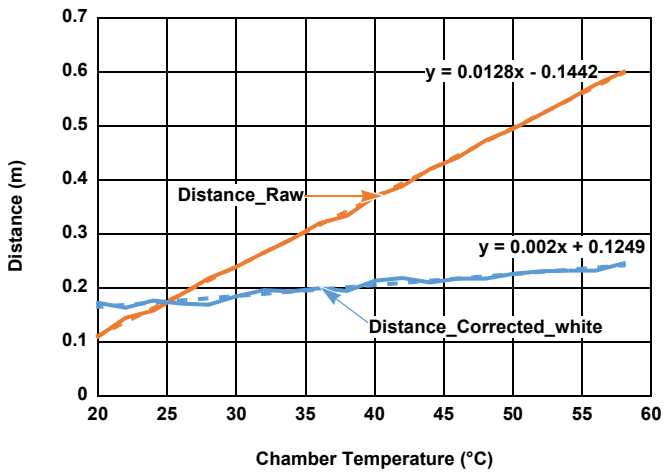

Figure 14. Temperature Performance Before and After Correction

4. Ordering Information

Part Number	Description
ISL29501-ST-EV1Z	ISL29501 Sand Tiger Evaluation Board

5. Revision History

Revision	Date	Description
1.00	Apr 5, 2022	Applied new template.
0.00	Oct 7, 2015	Initial release

IMPORTANT NOTICE AND DISCLAIMER

RENESAS ELECTRONICS CORPORATION AND ITS SUBSIDIARIES (“RENESAS”) PROVIDES TECHNICAL SPECIFICATIONS AND RELIABILITY DATA (INCLUDING DATASHEETS), DESIGN RESOURCES (INCLUDING REFERENCE DESIGNS), APPLICATION OR OTHER DESIGN ADVICE, WEB TOOLS, SAFETY INFORMATION, AND OTHER RESOURCES “AS IS” AND WITH ALL FAULTS, AND DISCLAIMS ALL WARRANTIES, EXPRESS OR IMPLIED, INCLUDING, WITHOUT LIMITATION, ANY IMPLIED WARRANTIES OF MERCHANTABILITY, FITNESS FOR A PARTICULAR PURPOSE, OR NON-INFRINGEMENT OF THIRD PARTY INTELLECTUAL PROPERTY RIGHTS.

These resources are intended for developers skilled in the art designing with Renesas products. You are solely responsible for (1) selecting the appropriate products for your application, (2) designing, validating, and testing your application, and (3) ensuring your application meets applicable standards, and any other safety, security, or other requirements. These resources are subject to change without notice. Renesas grants you permission to use these resources only for development of an application that uses Renesas products. Other reproduction or use of these resources is strictly prohibited. No license is granted to any other Renesas intellectual property or to any third party intellectual property. Renesas disclaims responsibility for, and you will fully indemnify Renesas and its representatives against, any claims, damages, costs, losses, or liabilities arising out of your use of these resources. Renesas' products are provided only subject to Renesas' Terms and Conditions of Sale or other applicable terms agreed to in writing. No use of any Renesas resources expands or otherwise alters any applicable warranties or warranty disclaimers for these products.

(Rev.1.0 Mar 2020)

Corporate Headquarters

TOYOSU FORESIA, 3-2-24 Toyosu,
Koto-ku, Tokyo 135-0061, Japan
www.renesas.com

Contact Information

For further information on a product, technology, the most up-to-date version of a document, or your nearest sales office, please visit:
www.renesas.com/contact/

Trademarks

Renesas and the Renesas logo are trademarks of Renesas Electronics Corporation. All trademarks and registered trademarks are the property of their respective owners.