User's Manual

16

RL78/G23 Lighting Communication Master Evaluation Board

User's Manual

16-Bit Single-Chip Microcontrollers

RL78 Family

All information contained in these materials, including products and product specifications, represents information on the product at the time of publication and is subject to change by Renesas Electronics Corp. without notice. Please review the latest information published by Renesas Electronics Corp. through various means, including the Renesas Electronics Corp. website (http://www.renesas.com).

Renesas Electronics
www.renesas.com

Rev.1.02 Mar. 2023

Notice

1. Descriptions of circuits, software and other related information in this document are provided only to illustrate the operation of semiconductor products and application examples. You are fully responsible for the incorporation or any other use of the circuits, software, and information in the design of your product or system. Renesas Electronics disclaims any and all liability for any losses and damages incurred by you or third parties arising from the use of these circuits, software, or information.
2. Renesas Electronics hereby expressly disclaims any warranties against and liability for infringement or any other claims involving patents, copyrights, or other intellectual property rights of third parties, by or arising from the use of Renesas Electronics products or technical information described in this document, including but not limited to, the product data, drawings, charts, programs, algorithms, and application examples.
3. No license, express, implied or otherwise, is granted hereby under any patents, copyrights or other intellectual property rights of Renesas Electronics or others.
4. You shall be responsible for determining what licenses are required from any third parties, and obtaining such licenses for the lawful import, export, manufacture, sales, utilization, distribution or other disposal of any products incorporating Renesas Electronics products, if required.
5. You shall not alter, modify, copy, or reverse engineer any Renesas Electronics product, whether in whole or in part. Renesas Electronics disclaims any and all liability for any losses or damages incurred by you or third parties arising from such alteration, modification, copying or reverse engineering.
6. Renesas Electronics products are classified according to the following two quality grades: “Standard” and “High Quality”. The intended applications for each Renesas Electronics product depends on the product’s quality grade, as indicated below.
   "Standard": Computers; office equipment; communications equipment; test and measurement equipment; audio and visual equipment; home electronic appliances; machine tools; personal electronic equipment; industrial robots; etc.
   "High Quality": Transportation equipment (automobiles, trains, ships, etc.); traffic control (traffic lights); large-scale communication equipment; key financial terminal systems; safety control equipment; etc.
   Unless expressly designated as a high reliability product or a product for harsh environments in a Renesas Electronics data sheet or other Renesas Electronics document, Renesas Electronics products are not intended or authorized for use in products or systems that may pose a direct threat to human life or bodily injury (artificial life support devices or systems; surgical implantations; etc.), or may cause serious property damage (space system; undersea repeaters; nuclear power control systems; aircraft control systems; key plant systems; military equipment; etc.). Renesas Electronics disclaims any and all liability for any damages or losses incurred by you or any third parties arising from the use of any Renesas Electronics product that is inconsistent with any Renesas Electronics data sheet, user’s manual or other Renesas Electronics document.
7. No semiconductor product is absolutely secure. Notwithstanding any security measures or features that may be implemented in Renesas Electronics hardware or software products, Renesas Electronics shall have absolutely no liability arising out of any vulnerability or security breach, including but not limited to any unauthorized access to or use of a Renesas Electronics product or a system that uses a Renesas Electronics product. RENESAS ELECTRONICS DOES NOT WARRANT OR GUARANTEE THAT RENESAS ELECTRONICS PRODUCTS, OR ANY SYSTEMS CREATED USING RENESAS ELECTRONICS PRODUCTS WILL BE INVULNERABLE OR FREE FROM CORRUPTION, ATTACK, VIRUSES, INTERFERENCE, HACKING, DATA LOSS OR THEFT, OR OTHER SECURITY INTRUSION (“Vulnerability Issues”). RENESAS ELECTRONICS DISCLAIMS ANY AND ALL RESPONSIBILITY OR LIABILITY ARISING FROM OR RELATED TO ANY VULNERABILITY ISSUES. FURTHERMORE, TO THE EXTENT PERMITTED BY APPLICABLE LAW, RENESAS ELECTRONICS DISCLAIMS ANY AND ALL WARRANTIES, EXPRESS OR IMPLIED, WITH RESPECT TO THIS DOCUMENT AND ANY RELATED OR ACCOMPANYING SOFTWARE OR HARDWARE, INCLUDING BUT NOT LIMITED TO THE IMPLIED WARRANTIES OF MERCHANTABILITY, OR FITNESS FOR A PARTICULAR PURPOSE.
8. When using Renesas Electronics products, refer to the latest product information (data sheets, user’s manuals, application notes, “General Notes for Handling and Using Semiconductor Devices” in the reliability handbook, etc.), and ensure that usage conditions are within the ranges specified by Renesas Electronics with respect to maximum ratings, operating power supply voltage range, heat dissipation characteristics, installation, etc. Renesas Electronics disclaims any and all liability for any malfunctions, failure or accident arising out of the use of Renesas Electronics products outside of such specified ranges.
9. Although Renesas Electronics endeavors to improve the quality and reliability of Renesas Electronics products, semiconductor products have specific characteristics, such as the occurrence of failure at a certain rate and malfunctions under certain use conditions. Unless designated as a high reliability product or a product for harsh environments in a Renesas Electronics data sheet or other Renesas Electronics document, Renesas Electronics products are not subject to radiation resistance design. You are responsible for implementing safety measures to guard against the possibility of bodily injury, injury or damage caused by fire, and/or danger to the public in the event of a failure or malfunction of Renesas Electronics products, such as safety design for hardware and software, including but not limited to redundancy, fire control and malfunction prevention, appropriate treatment for aging degradation or any other appropriate measures. Because the evaluation of microcomputer software alone is very difficult and impractical, you are responsible for evaluating the safety of the final products or systems manufactured by you.
10. Please contact a Renesas Electronics sales office for details as to environmental matters such as the environmental compatibility of each Renesas Electronics product. You are responsible for carefully and sufficiently investigating applicable laws and regulations that regulate the inclusion or use of controlled substances, including without limitation, the EU RoHS Directive, and using Renesas Electronics products in compliance with all these applicable laws and regulations. Renesas Electronics disclaims any and all liability for damages or losses occurring as a result of your noncompliance with applicable laws and regulations.
11. Renesas Electronics products and technologies shall not be used for or incorporated into any products or systems whose manufacture, use, or sale is prohibited under any applicable domestic or foreign laws or regulations. You shall comply with any applicable export control laws and regulations promulgated and administered by the governments of any countries asserting jurisdiction over the parties or transactions.
12. It is the responsibility of the buyer or distributor of Renesas Electronics products, or any other party who distributes, disposes of, or otherwise sells or transfers the product to a third party, to notify such third party in advance of the contents and conditions set forth in this document.
13. This document shall not be reprinted, reproduced or duplicated in any form, in whole or in part, without prior written consent of Renesas Electronics.
14. Please contact a Renesas Electronics sales office if you have any questions regarding the information contained in this document or Renesas Electronics products.

(Note1) “Renesas Electronics” as used in this document means Renesas Electronics Corporation and also includes its directly or indirectly controlled subsidiaries.
(Note2) “Renesas Electronics product(s)” means any product developed or manufactured by or for Renesas Electronics.

(Rev.5.0-1 October 2020)

Corporate Headquarters

TOYOSU FORESIA, 3-2-24 Toyosu,
Koto-ku, Tokyo 135-0061, Japan

www.renesas.com

Trademarks

Renesas and the Renesas logo are trademarks of Renesas Electronics Corporation. All trademarks and registered trademarks are the property of their respective owners.

Contact information

For further information on a product, technology, the most up-to-date version of a document, or your nearest sales office, please visit: www.renesas.com/contact/.

© 2023 Renesas Electronics Corporation. All rights reserved.

General Precautions in the Handling of Microprocessing Unit and Microcontroller Unit Products

The following usage notes are applicable to all Microprocessing unit and Microcontroller unit products from Renesas. For detailed usage notes on the products covered by this document, refer to the relevant sections of the document as well as any technical updates that have been issued for the products.

1. Precaution against Electrostatic Discharge (ESD)

   A strong electrical field, when exposed to a CMOS device, can cause destruction of the gate oxide and ultimately degrade the device operation. Steps must be taken to stop the generation of static electricity as much as possible, and quickly dissipate it when it occurs. Environmental control must be adequate. When it is dry, a humidifier should be used. This is recommended to avoid using insulators that can easily build up static electricity. Semiconductor devices must be stored and transported in an anti-static container, static shielding bag or conductive material. All test and measurement tools including work benches and floors must be grounded. The operator must also be grounded using a wrist strap. Semiconductor devices must not be touched with bare hands. Similar precautions must be taken for printed circuit boards with mounted semiconductor devices.

2. Processing at power-on

   The state of the product is undefined at the time when power is supplied. The states of internal circuits in the LSI are indeterminate and the states of register settings and pins are undefined at the time when power is supplied. In a finished product where the reset signal is applied to the external reset pin, the states of pins are not guaranteed from the time when power is supplied until the reset process is completed. In a similar way, the states of pins in a product that is reset by an on-chip power-on reset function are not guaranteed from the time when power is supplied until the power reaches the level at which resetting is specified.

3. Input of signal during power-off state

   Do not input signals or an I/O pull-up power supply while the device is powered off. The current injection that results from input of such a signal or I/O pull-up power supply may cause malfunction and the abnormal current that passes in the device at this time may cause degradation of internal elements. Follow the guideline for input signal during power-off state as described in your product documentation.

4. Handling of unused pins

   Handle unused pins in accordance with the directions given under handling of unused pins in the manual. The input pins of CMOS products are generally in the high-impedance state. In operation with an unused pin in the open-circuit state, extra electromagnetic noise is induced in the vicinity of the LSI, an associated shoot-through current flows internally, and malfunctions occur due to the false recognition of the pin state as an input signal become possible.

5. Clock signals

   After applying a reset, only release the reset line after the operating clock signal becomes stable. When switching the clock signal during program execution, wait until the target clock signal is stabilized. When the clock signal is generated with an external resonator or from an external oscillator during a reset, ensure that the reset line is only released after full stabilization of the clock signal. Additionally, when switching to a clock signal produced with an external resonator or by an external oscillator while program execution is in progress, wait until the target clock signal is stable.

6. Voltage application waveform at input pin

   Waveform distortion due to input noise or a reflected wave may cause malfunction. If the input of the CMOS device stays in the area between V_{IL} (Max.) and V_{IH} (Min.) due to noise, for example, the device may malfunction. Take care to prevent chattering noise from entering the device when the input level is fixed, and also in the transition period when the input level passes through the area between V_{IL} (Max.) and V_{IH} (Min.).

7. Prohibition of access to reserved addresses

   Access to reserved addresses is prohibited. The reserved addresses are provided for possible future expansion of functions. Do not access these addresses as the correct operation of the LSI is not guaranteed.

8. Differences between products

   Before changing from one product to another, for example to a product with a different part number, confirm that the change will not lead to problems. The characteristics of a microprocessing unit or microcontroller unit products in the same group but having a different part number might differ in terms of internal memory capacity, layout pattern, and other factors, which can affect the ranges of electrical characteristics, such as characteristic values, operating margins, immunity to noise, and amount of radiated noise. When changing to a product with a different part number, implement a system-evaluation test for the given product.

Table of Contents

1. Overview 1
1.1 Purpose 1
1.2 Features 1
1.3 Board specifications 2
1.4 Block Diagram 3

2. Specification 4
2.1 Exterior 4
2.2 Parts layout 5
2.3 Operating Environment 6
2.4 Description of Functions 7
2.4.1 Control Unit 7
2.4.2 Power Supply 9
2.4.3 Operation Mode Switching 11
2.4.4 Procedures for connecting and disconnecting peripheral devices 12

3. Usage 13
3.1 Preparation 13
3.1.1 Downloading Software 13
3.1.2 Installing Communication GUI 13
3.1.3 Installing e^2 studio 14
3.1.4 Installing Renesas Flash Programmer 15
3.2 Writing Programs 16
3.2.1 Procedures for Writing Programs with Renesas Flash Programmer (RFP) 16
3.3 Operation Procedure 18
3.3.1 Standalone Operation of the Board (DALI Communication) 18
3.3.2 Standalone Operation of the Board (Infrared Communication) 19
3.3.3 Operation with PC Connected (DMX512 Communication) 20
3.3.4 Operation with PC Connected (DALI Communication) 22
3.3.5 Resetting Firmware to the Factory Setting 23
3.4 On-Chip Debugging 23

1. Overview

This document describes the RL78/G23 Lighting Communication Master Evaluation Board (RTK7RL23LMP00000BJ) (hereafter referred to as this product).

For more information about this product, please visit the following web page.

URL: https://www.renesas.com/rl78g23_lcm_evaluation_board/

1.1 Purpose

This product is a communication master board for controlling various lighting evaluation boards. This manual describes the hardware specifications and the operating procedures for various lighting communications.

1.2 Features

This product supports four types of communication interfaces:

- DALI protocol communication interface
- DMX512 protocol communication interface
- Infrared remote control interface
- Pmod™ Connector

Design for DALI multi-master operation

- Compliant with IEC62386-101 Ed.2.0 and IEC62386-103 Ed.1.0

It supports DALI protocol communication operation with USB bus power

- Equipped with a simple power supply function

Stand-alone operation

- Communication possible only through switch operation on the board

Enables program writing and debugging using USB (COM port) communication function

1.3 Board specifications

Table 1.1 is an overview of the board specifications.

Table 1.1 Board Specification Overview

Item	Specification
MCU used	Model Number: R7F100GGG2DFB Package: 48-pin LFQFP Internal memory: ROM 128KB、RAM 16KB、Data Flash 8KB
Board size	120mm × 120mm
Power	MCU power supply (VDD): 3.3V DMX512, Infrared LED power supply voltage: 4.7V
Power supply (input)*1	USB Connector: VBUS(5V) DC Jack: 5V/2A DALI Connector (DALI bus power supply): 10V/55mA(typ.)~20.5V/29mA(typ.)
Power supply (DALI bus power output) *2	Powered by USB: 16V/35mA (typ.) Powered by AC adapter: 16V/223mA (typ.)
Consumption Current	Maximum 760mA (when powered by AC adapter)
Applicable Adapter Plug*3	JEITA RC-5320A TYPE2
Push Switch	Reset Switch
Slide Switch	CH switching switch for infrared communication
DIP Switch	Operation mode selection switch
Touch Sensor Key	Mutual capacitance method, 3 x 3 matrix electrode circuit
LED	USB or AC adapter power LED: (Green) x 1 Indicator LED: (Red) x 1, (Green) x 1, (Blue) x 1 Infrared LED x 1
USB Connector	Connector: miniUSB Type-B
Pmod™ Connector	12pin Connector: Pmod™ Type6A
Emulator Connector	14pin Connector (For connecting to E2 Emulator Lite)
DALI Connector	DALI Compliant interface
DMX512 Connector	DMX512 (RDM-DMX) Compliant interface
MCU Connector	42pin Connector (Unmounted)

*1: The factory default power supply is the USB setting; change the jumper setting if AC adapter power is to be supplied. For details, please refer to Chapter 2.4.2 Power Supply.

*2: From the listed current value, supply the current consumption of this board.

*3: For details on DC jack specifications, refer to Chapter 2.4.2 Power Supply.

1.4 Block Diagram

The block diagram of this product is shown in Figure 1-1.

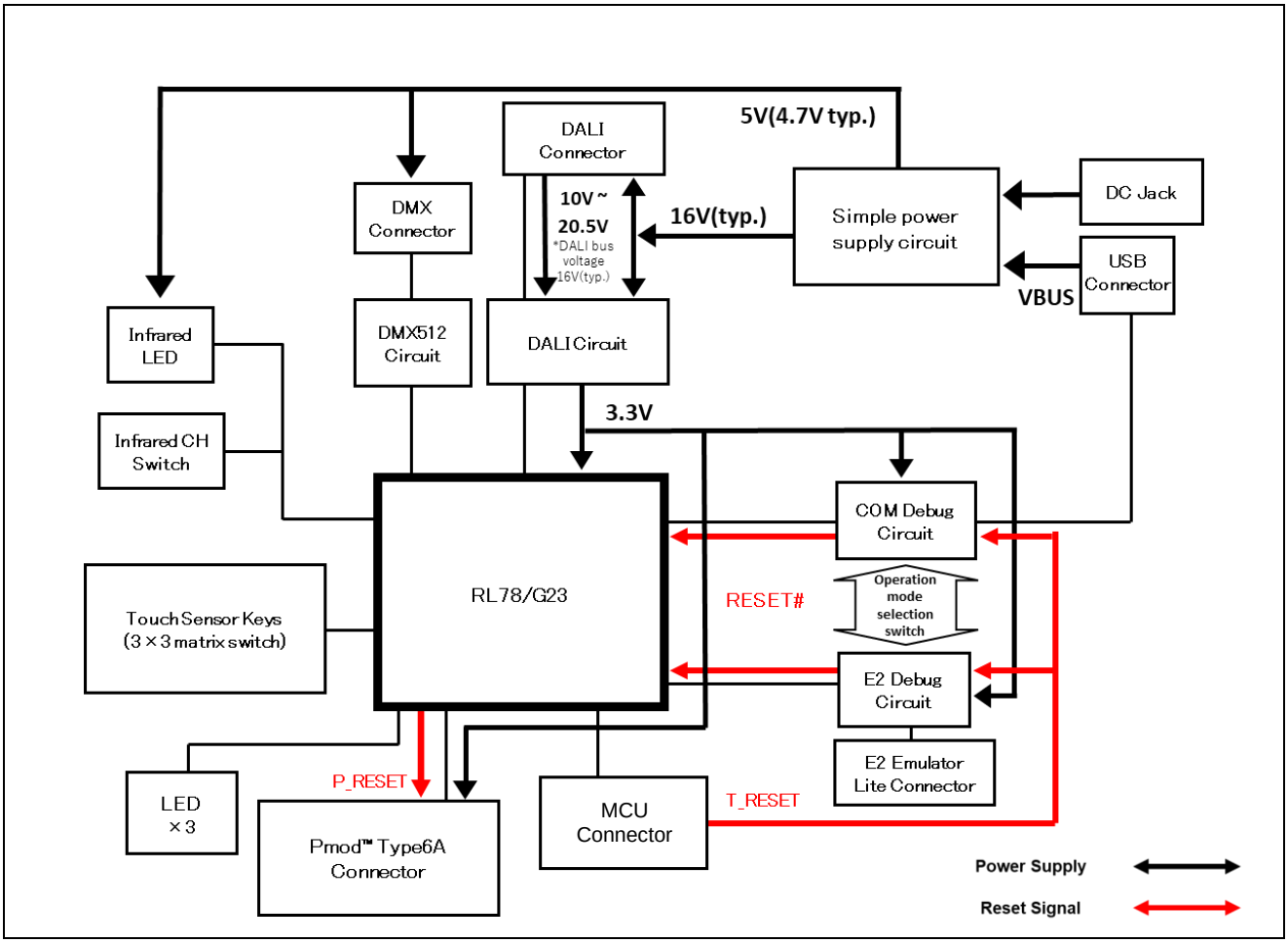

Figure 1-1 Block Diagram

2. Specification

This chapter describes the specifications of this product.

2.1 Exterior

Figure 2-1 shows the exterior of the parts surface of this product.

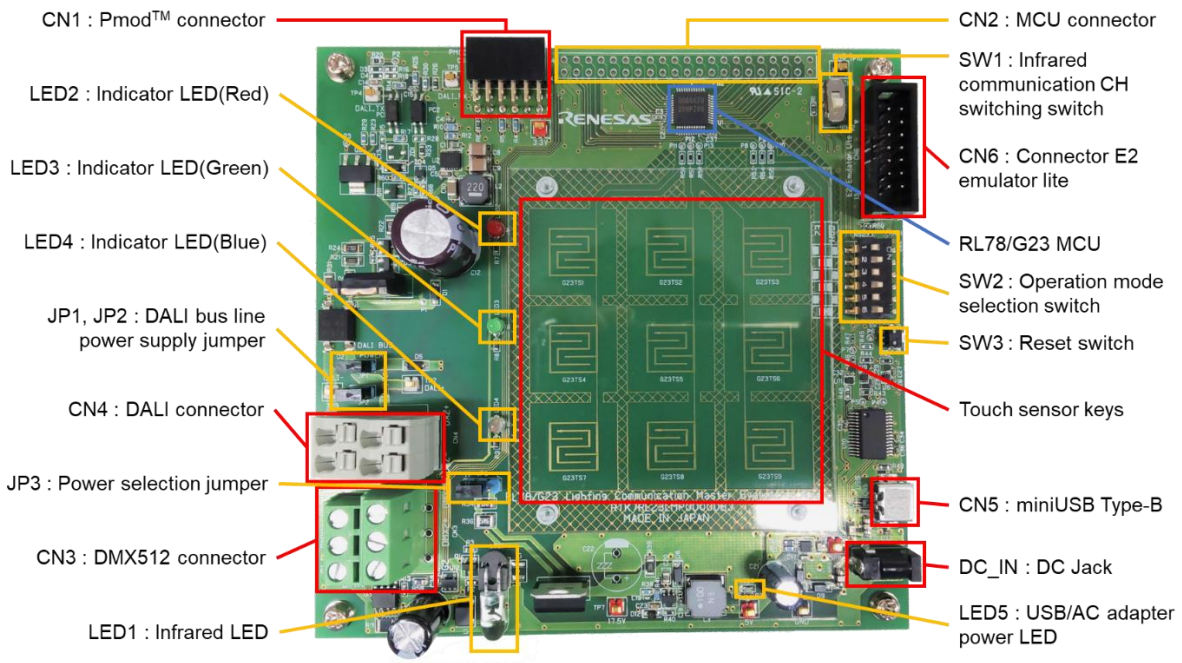

Figure 2-1 Exterior of the parts surface

2.2 Parts layout

Figure 2-2 shows the parts layout of this product.

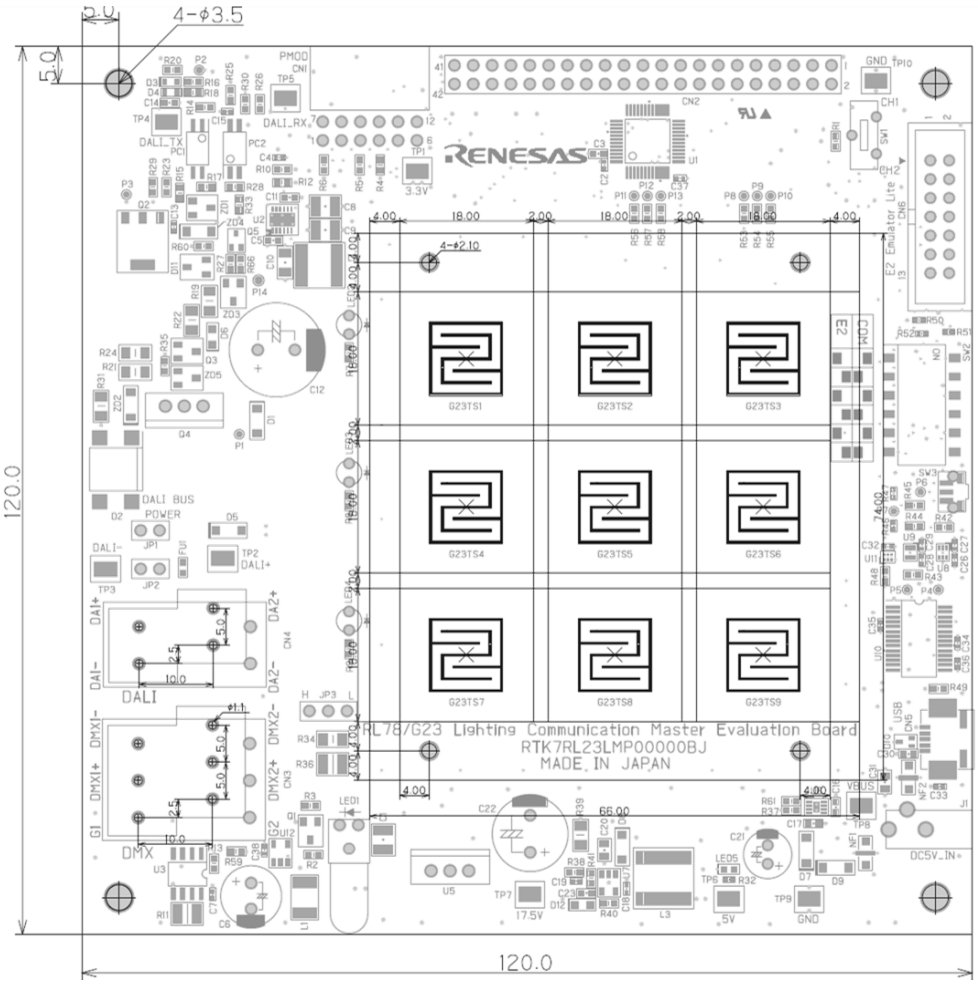

Figure 2-2 Parts layout

2.3 Operating Environment

Figure 2-3 shows the operating environment of this product.

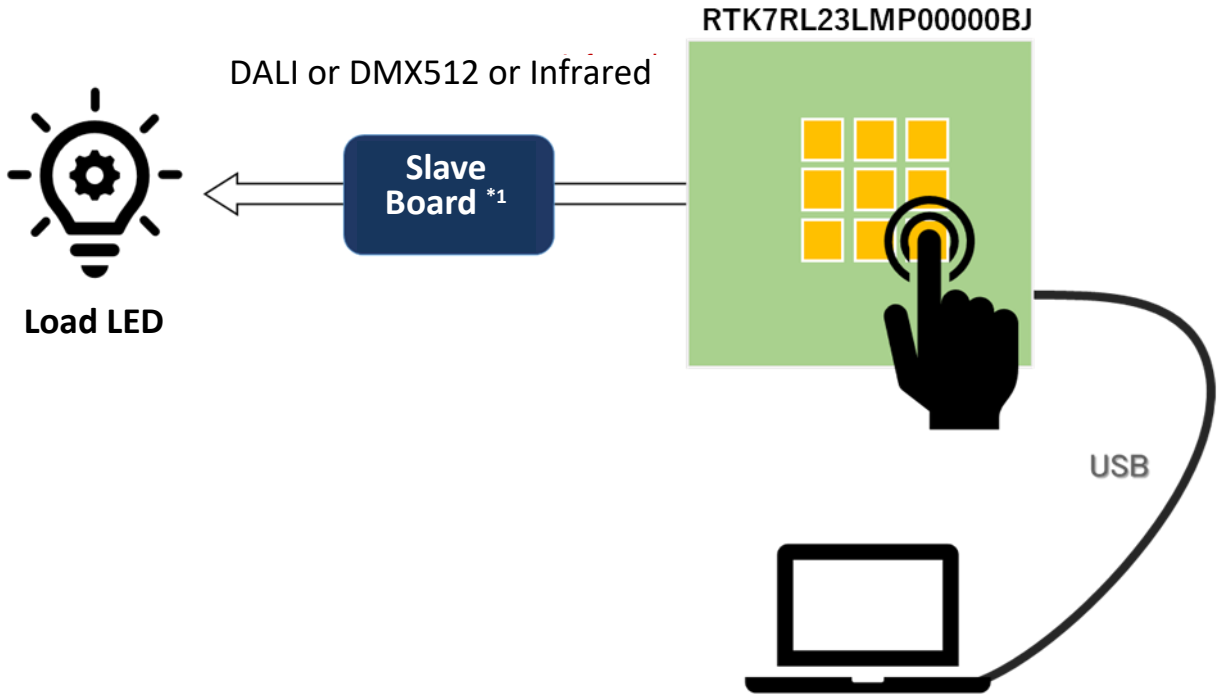

Figure 2-3 Operating Environment

*1: Lighting equipment/evaluation board supporting DALI or DMX512, infrared, etc.

Note: PC, communication/evaluation board, and load LED must be prepared separately.

2.4 Description of Functions

2.4.1 Control Unit

A list of operating parts is shown in Table 2-1. For the position of the parts, see Chapter 2-1, Figure 2-1.

Figure 2-4 shows the recommended specifications for the communication cable that connects to the DALI connector and DMX512 connector.

Table 2-1 List of Main Parts

<table>
<tr><th>Parts</th><th>Function</th></tr>
<tr><td>CN1</td><td>Pmod™ connector</td></tr>
<tr><td>CN2</td><td>MCU Connector</td></tr>
<tr><td>CN3</td><td>DMX512 connector</td></tr>
<tr><td>CN4</td><td>DALI connector</td></tr>
<tr><td>CN5</td><td>USB connector</td></tr>
<tr><td>CN6</td><td>Connector for E2 emulator Lite</td></tr>
<tr><td>JP1</td><td>DALI bus line power supply jumper</td></tr>
<tr><td>JP2</td><td>DALI bus line power supply jumper</td></tr>
<tr><td>JP3</td><td>USB/DC jack power selection jumper</td></tr>
<tr><td>J1
DC5V_IN</td><td>DC jack
See "Table 2 4" in "2.4.2 Power Supply" for details.</td></tr>
<tr><td>SW1</td><td>Sets the Infrared channels</td></tr>
<tr><td>SW2</td><td>Switches to set the operation modes
For details, see “2.4.3 Operation Mode Switching
This board can be connected to a variety of evaluation and development tools by switching the operation modes. The operation modes are described in Table 2-5, and the setting methods are shown in Table 2-6.
Also, switch the mode with the power supply to the board turned off.

Table 2-5 Features of the operating mode
<table>
<tr><th>Mode</th><th>Feature</th></tr>
<tr><td>E2</td><td>This mode allows the user to use the DALI master controller GUI or the DMX512 master control GUI on the evaluation board alone or connected to a PC. When using each GUI, it is necessary to write the firmware at the time of shipment.
By connecting the E2 emulator Lite to CN6, program writing and on-chip debugging are possible.</td></tr>
<tr><td>COM</td><td>This mode allows program writing/debugging via USB. (*2)
It enables program writing and on-chip debugging via USB by connecting to a PC.</td></tr>
</table>
*1: Be sure to turn off the power supply to the board before switching the operation mode.</td></tr>
</table>

*2: Do not set to COM mode when E2 emulator Lite is connected.

Table 2-6 Switch Settings for Operation Modes

Mode	SW2					
	1	2	3	4	5	6
E2	OFF	ON	OFF	ON	OFF	ON
COM	ON	OFF	ON	OFF	ON	OFF

”.

SW3	RESET Switch
TS1	Touch sensor key to send the DALI communication command*1
TS2	Touch sensor key to send the DALI communication command*1
TS3	Touch sensor key to send the DALI communication command*1
TS4	Touch sensor key to send the DALI communication command*1
TS5	Touch sensor key to send the DALI communication command*1
TS6	Touch sensor key to send the DALI communication command*1
TS7	Touch sensor key to send the DALI communication command*1
TS8	Touch sensor key to send the DALI communication command*1
TS9	Touch sensor key to send the infrared communication command*1

*1: Default software setting at the shipment.

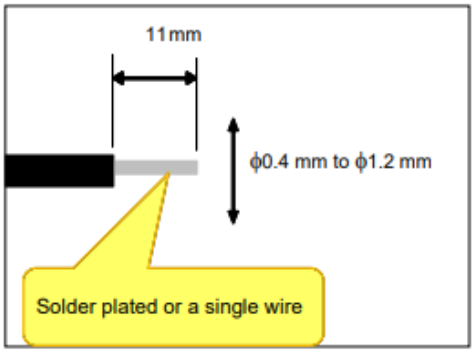

Figure 2-4 Recommended communication cable

2.4.2 Power Supply

This product supports the following power supply methods. (*1)
It is necessary to change the jumper setting depending on the power supply method. See Table 2-2 for jumper settings.
In addition, Table 2-3 shows a list of supported/unsupported functions for each power supply method.

- AC adapter power supply
  Connect the AC adapter power plug to the DC jack (J1/DC5V_IN). See Table 2-4 for DC jack specifications.
  It is possible to output about 220mA, which is close to the DALI standard, to the DALI bus. In addition, because of its high output, it is possible to operate all the functions installed in this product.
  Simultaneous connection with the following USB is also possible (*2).

- USB power supply
  It is possible to operate with USB bus power by connecting a USB cable to the USB connector (CN5).
  Approximately 35mA can be simply output to the DALI bus. Due to the low output, there are restrictions on the functions that can be operated.

- Power supply from DALI bus line
  It is possible to power the board from an external DALI power supply.

*1: Never supply power from the E2 emulator Lite. It will cause failure of the system power generation regulator.
*2: The current output is about 220mA even when the AC adapter and USB are connected simultaneously. The jumper settings are the same as when AC adapter power is supplied.

Table 2-2 Power supply selection jumper

Parts Reference	Setting (*1)	Function	Remarks
JP1/JP2 (*3)	OPEN	Stopping the power supply from this product to the DALI bus line and system power supply (*2). (When power is supplied from the DALI bus)	Factory default settings
	SHORT	Power supply from this product to DALI bus line and system power supply.	
JP3	1-2 SHORT (H side)	Power supply from AC adapter	
	2-3 SHORT (L side)	Power supply from USB	Factory default settings

*1: Be sure to switch the jumper setting with the power supply to the board turned off.
*2: The system power supply of this product is supplied from the DALI bus line.
*3: When this product receives power from the DALI bus line (when power is supplied from a source other than this product), be sure to open JP1/JP2 to avoid current conflicts in the circuit.

Table 2-3 Supported / Not supported function list for each power supply method

Functions	Board power supply method		
	USB	AC adapter	DALI bus
DALI communication (Note)	Supported	Supported	Supported
LED2,3,4			
DMX512 communication			Not supported
COM debug			
E2 debug	Not supported		
Pmod™(I2C communication)			
Infrared LED			

Note: When supplying power to the DALI bus line from this product, USB power supply may run out of power during

DALI communication. It is recommended to supply power from an AC adapter.

Table 2-4 DC Jack Specifications

Item		Description
Manufacturer		CUI
Model Number		PJ-018H
Specification	Applicable AC Adapter Plug	JEITA RC-5320A TYPE2
	Number of Poles	3 poles
	Polarity	Center plus
	Exterior / Dimensions	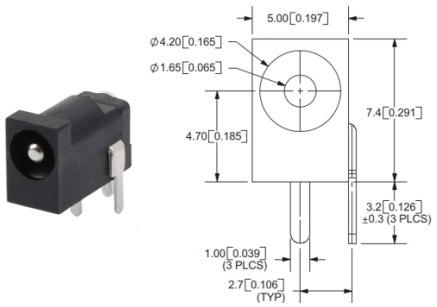

2.4.3 Operation Mode Switching

This board can be connected to a variety of evaluation and development tools by switching the operation modes. The operation modes are described in Table 2-5, and the setting methods are shown in Table 2-6. Also, switch the mode with the power supply to the board turned off.

Table 2-5 Features of the operating mode

Mode	Feature
E2	This mode allows the user to use the DALI master controller GUI or the DMX512 master control GUI on the evaluation board alone or connected to a PC. When using each GUI, it is necessary to write the firmware at the time of shipment. By connecting the E2 emulator Lite to CN6, program writing and on-chip debugging are possible.
COM	This mode allows program writing/debugging via USB. (*2) It enables program writing and on-chip debugging via USB by connecting to a PC.

*1: Be sure to turn off the power supply to the board before switching the operation mode.

*2: Do not set to COM mode when E2 emulator Lite is connected.

Table 2-6 Switch Settings for Operation Modes

Mode	SW2					
	1	2	3	4	5	6
E2	OFF	ON	OFF	ON	OFF	ON
COM	ON	OFF	ON	OFF	ON	OFF

2.4.4 Procedures for connecting and disconnecting peripheral devices

The procedure for connecting and disconnecting peripheral devices (E2 emulator Lite, AC adapter, USB cable) is shown below. Be sure to follow the procedures below when connecting or disconnecting peripheral devices.

(a) When connecting

1. When connecting the E2 emulator Lite, first connect the E2 emulator Lite to the debug connector (CN6) of this product.
2. After connecting the E2 emulator Lite to the debug connector (CN6) of this product, connect the E2 emulator Lite to the PC side.
3. When connecting an AC adapter, connect the AC adapter plug to the DC jack (DC5V_IN) of this product.
4. For USB connection, connect the USB cable to the USB connector (CN5) of this product.

(b) When removing

1. If the product is connected via USB, remove the USB cable from the USB connector (CN5).
2. If the AC adapter is connected to this product, remove the AC adapter from the DC jack (DC5V_IN).
3. If the E2 emulator Lite is connected to this product, first remove the E2 emulator Lite from the PC.
4. After removing the E2 emulator Lite from the PC, remove the E2 emulator Lite from the debug connector (CN6) of this product.

3. Usage

This chapter describes how to install the software required to use this board, and the operating procedures for this board.

3.1 Preparation

3.1.1 Downloading Software

The following software programs are required to develop and evaluate software by using this board.
Download the software from the Renesas Electronics website.

- Communication GUI
  DALI Master Controller GUI Ver 2.02 or later *1
  DMX512 master controller GUI Ver. 2.00 or later
- Integrated development environment
  e² studio*2
- Programming Tool
  Renesas Flash Programmer*3

*1: The DALI Master Controller GUI for RX65N cannot be used.
*2: Required when developing programs for the product and performing on-chip debugging.
*3: Required when writing the firmware for the product.

3.1.2 Installing Communication GUI

To evaluate the communication protocol for this product, a communication GUI is required. Install the GUI that supports the communication protocol to be used. For details on installing a GUI, refer to the following user's manuals.

- DALI Master Controller GUI User's Manual (R20UT0715)
- DMX512 Master Controller GUI User's Manual (R01US0200)

3.1.3 Installing e² studio

e² studio is required for program development and on-chip debugging of RL78/G23 equipped on this board. Please follow the steps below to install it on the PC.

1. Download the "Integrated Development Environment e² studio installer for windows" from the e² studio download page.
2. Double-click the e² studio installer. Click "Run" to confirm that the installer is running.
3. The e² studio Installation Wizard page will open. Select a location to install.
4. Install Folder
   Specify installation destination.
5. Device Families
   Select RL78 device support, click [Next].
6. Extra Components
   Select the language pack, click [Next].
7. Components
   Check that the following items are checked, and click [Next].
   - Renesas e² studio Common Components
   - Renesas e² studio Tools
   - Renesas RL78 Family Support
8. Additional Software
   In Renesas QE, "QE for Capacitive Touch[RL78]" check box is selected, and click [Next].
9. License Agreement
   Read and agree to the license agreement, click [Next].
10. Shortcuts
    Select shortcut name for start menu and click [Next].
11. Summary
    A list of components to be installed is displayed, so check the contents and click [Install].
12. Installing…
    During installation, a dialog box for installing the software opens according to the item selected in additional software, so follow the on-screen instructions.
13. Results
    The result of the installation is displayed. Check that there are no errors, then click the [Finish].

Remarks: When starting e² studio for the first time, the workspace selection screen will be displayed and then the tool chain selection screen will be displayed. Check the version of the compiler to be used and click "Register".

For details on installation and other basic operations, refer to the following user's manual.

- e² studio User's Manual: Getting Started Guide for V7.0 (R20UT4374)

3.1.4 Installing Renesas Flash Programmer

Renesas Flash Programmer (hereinafter referred to as "RFP") is required to rewrite the firmware of this product. Install it on the PC according to the following procedure.

1. Download the file from the RFP download page.
2. Click and execute the installer file Renesas Flash Programmer_Package_xxxx.exe. (xxxxx indicates the version.)
3. Follow the instructions displayed by the installer. Read and agree with the license agreement to continue installation.

3.2 Writing Programs

3.2.1 Procedures for Writing Programs with Renesas Flash Programmer (RFP)

This section describes the procedure for writing programs using RFP.

1. Set the operation mode of this board according to the tables below.

Table 3-1 Mode Switch Settings (RFP writing)

Tool used	Mode	SW2					
		1	2	3	4	5	6
E2 emulator Lite	E2	OFF	ON	OFF	ON	OFF	ON
USB	COM	ON	OFF	ON	OFF	ON	OFF

2. When connecting the E2 Emulator Lite, this product is powered by an AC adapter (*1).
   AC adapter power can be supplied even when the USB cable is connected.
   Set jumpers according to Table 2-2 in Section2.4.4. Connect peripheral devices to this product in the order as described in section 2.4.4 (a).

(a) Connection with USB interface

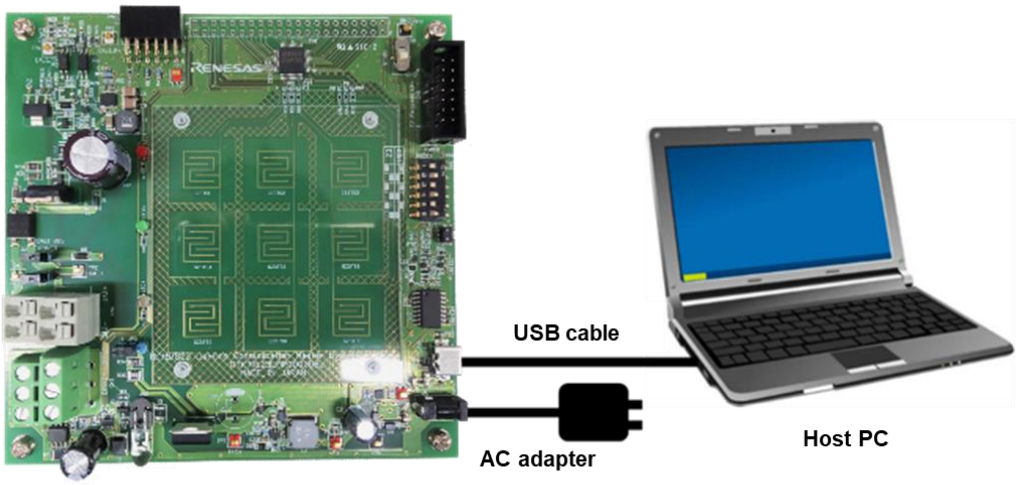

(b) Connection with the E2 emulator Lite used

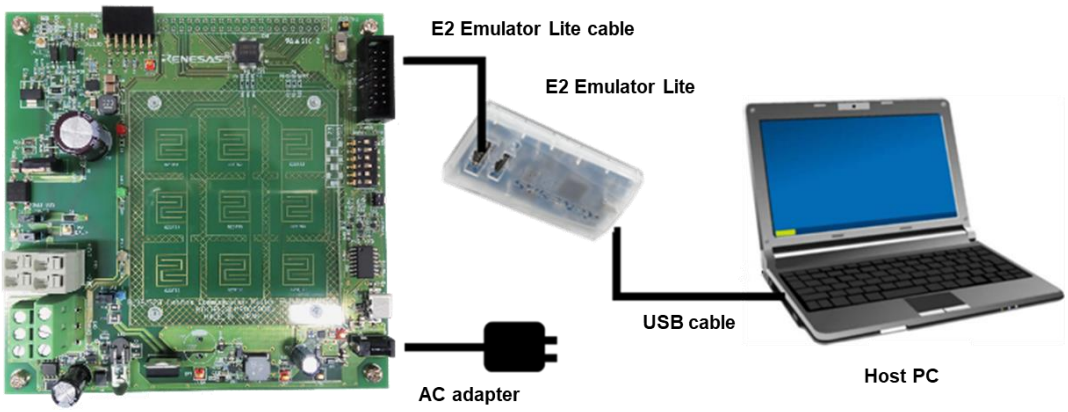

3. Start RFP on the PC.
4. In RFP, select to create a new workspace.
5. Select RL78/G23 for the microcontroller, enter the workspace name, and click the “Next” button.
6. Select the communication method.
   (a) Select "COM port number of virtual UART" when using the USB and select "2 write UART" for the interface.
   (b) Select "E2 emulator Lite" when using E2 emulator Lite and select "Do not supply" for power supply from E2 emulator Lite.(*1)
7. Check the setting information list. If everything is OK, click the “Finish” button.
8. Select “Write after erase (A)” on the “Microcontroller (M)” menu.
9. Click the “Browse” button and select and load the Hex file you want to write.
10. Click the “Start” button to start erase and write.
11. After confirming that the program writing is normally completed, quit RFP.
12. When disconnecting the connected device, follow the instructions in section2.4.4, (b) Removal.

(*1): Do not supply power from the E2 Emulator Lite. It may cause failure of the system power generation regulator.

3.3 Operation Procedure

3.3.1 Standalone Operation of the Board (DALI Communication)

This is the procedure to transmit the DALI command assigned to the touch sensor key using the firmware that is written at the time of shipment of this product.

1. Connect the communication cable to CN4. Connect one side of the connected communication cable to the DALI Control Gear. For the communication cable, refer to Figure 2-4 Recommended communication cable.
2. Supply power to this product from USB (CN5, JP3: L side) or AC adapter (DC_IN, JP3: H side). When supplying power to DALI bus line, please short-circuit JP1 and /JP2. AC adapter power supply (DC_IN, JP3: H side) is recommended.
3. Supply power to the DALI Control Gear.
4. Confirm that pressing the DALI communication touch sensor keys (TS1-TS8) of this product can control the dimming of the DALI Control Gear.
   The following table shows the features of the DALI communication touch sensor keys that are assigned in the factory firmware.

Touch key	Command
TS1	RECALL MAX LEVEL(0x05)
TS2	RECALL MIN LEVEL(0x06)
TS3	OFF(0x00)
TS4	UP(0x01)
TS5	DOWN(0x02)
TS6	GO TO SCENE(0x10 SCENE)
TS7	ON AND STEP UP(0x08)
TS8	STEP DOWN AND OFF(0x07)

The connection diagram is shown below.

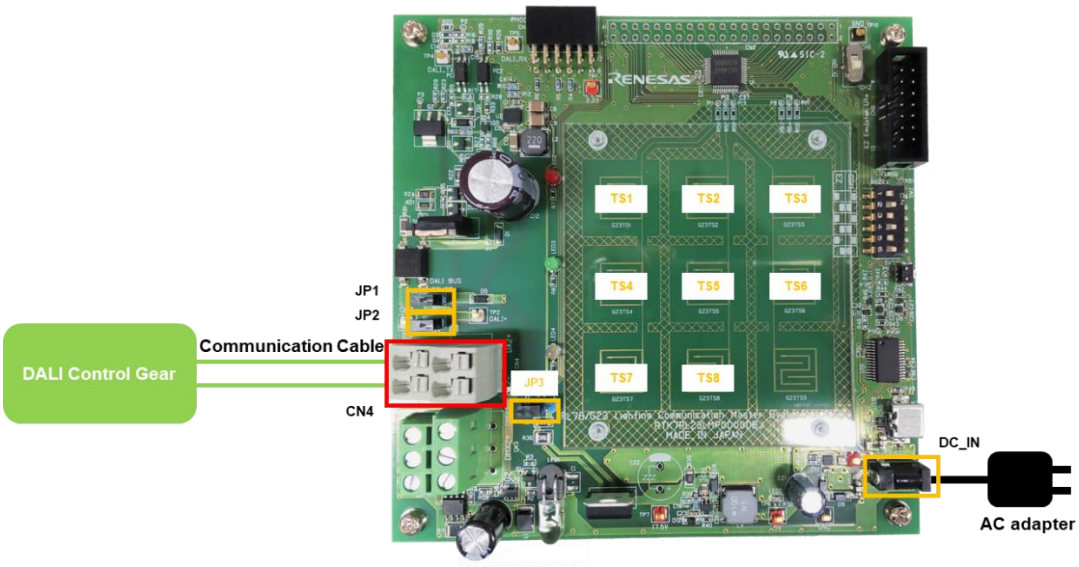

Figure 3-1 Connection for Standalone Operation of the Board (DALI Communication)

3.3.2 Standalone Operation of the Board (Infrared Communication)

This is the procedure to transmit the infrared code assigned to the touch sensor key using the firmware written at the time of shipment of this product.

1. Set the switches according to the table below.

SW1 (Infrared communication CH setting switch)	Factory Firmware Settings
Select the output CH (CH1, CH2) CH1: 0x5A CH2: 0xDA	NEC Format Custom code: 0x0000

2. Short JP1/JP2 and set JP3 to "H" side.
3. Connect the AC adapter plug to the DC jack (DC5V_IN) and supply power from the AC adapter.
4. Set LED1 (infrared diode) of this product so that it faces toward the light receiving section of the infrared communication board.
5. Check to confirm that infrared is transmitted by pressing the infrared communication command transmission touch sensor key (TS9) and is received by the infrared communication board.
6. Touch the infrared transmitting touch sensor key (TS9) on this product. Confirm that the infrared transmission from this product can be received by the infrared communication board.

The connection diagram is shown below.

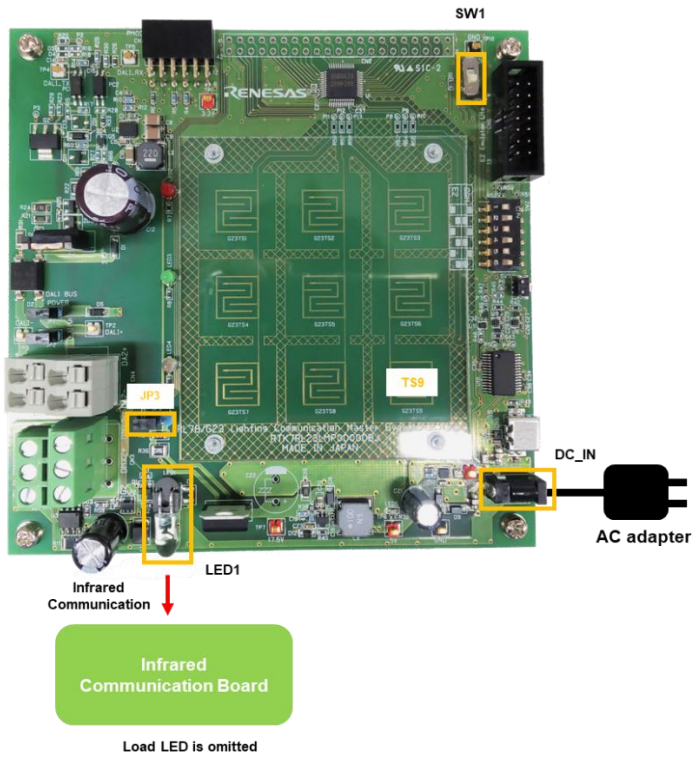

Figure 3-2 Connection for Standalone Operation of the Board (Infrared Communication)

3.3.3 Operation with PC Connected (DMX512 Communication)

This is the procedure for performing DMX512 communication using the DMX512 master control GUI on a PC, using the firmware written at the time of shipment of this product.

1. Set the operation mode switches according to the table below.

Table 3-2 Mode Switch Settings (DMX512 Communication)

Mode	SW2						Remarks
	1	2	3	4	5	6	
E2	OFF	ON	OFF	ON	OFF	ON	USB GUI communication

2. Connect a communication cable to CN3. Connect the other end of the cable to the DMX512 communication board. For the communication cable, refer to Figure 2-4 Recommended communication cable. Note that the DMX512 communication protocol has polarity for connection.

Table 3-3 CN3 Feature

Component	Pin	Feature
CN3	1	DMX512 1 (–) pin
	2	DMX512 2 (–) pin
	3	DMX512 1 (+) pin
	4	DMX512 2 (+) pin
	5	DMX512 1 GND pin
	6	DMX512 2 GND pin

3. If power is supplied from USB only, set JP3 to the L side. When connecting an AC adapter to this board, set JP3 to the H side.
4. Connect the USB cable and AC adapter to this product as described in section 2.4.4 "(a) When connecting".
5. Start up DMX512 Master Controller GUI on the PC. For the setting, refer to DMX512 Master Controller GUI User’s Manual (R01US0200).
6. When evaluation is complete, quit DMX512 Master Controller GUI.
7. Stop power supply to this product.
8. Disconnect the USB cable and AC adapter from this product according to section "(b) Disconnection" in chapter 2.4.4.

The connection diagram is shown below.

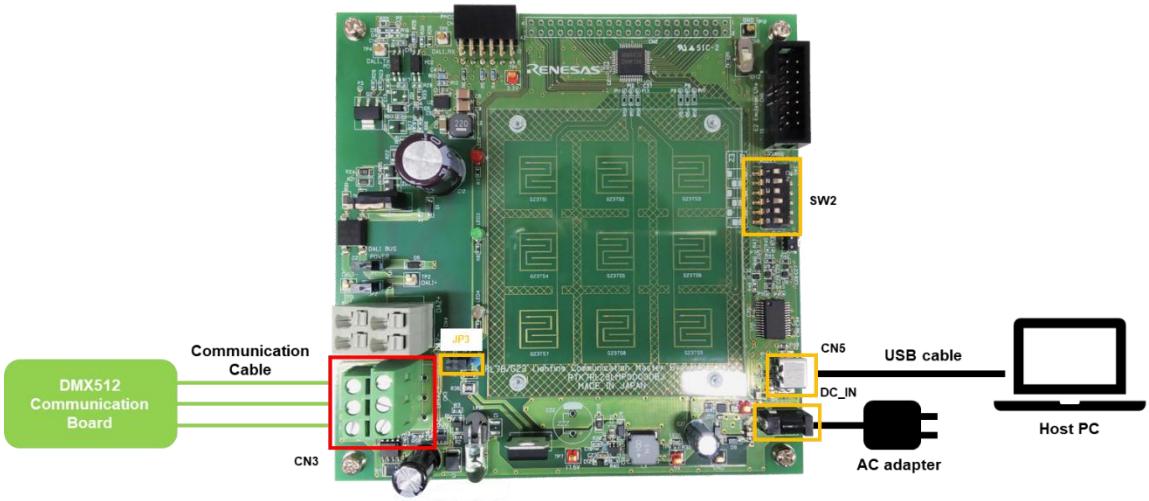

Figure 3-3 Connection for Operation with PC Connected (DMX512 Communication)

3.3.4 Operation with PC Connected (DALI Communication)

This is the procedure to perform DALI communication using the DALI master control GUI on a PC using the firmware written at the time of shipment of this product. Connect this product to a PC with a USB cable.

1. Set the operation mode switches according to the table below.

Table 3-4 Mode Switch Settings (DALI Communication)

Mode	SW2						Remarks
	1	2	3	4	5	6	
E2	OFF	ON	OFF	ON	OFF	ON	USB GUI communication

2. Connect the communication cable to CN4. Connect one side of the connected communication cable to the DALI Control Gear board. For the communication cable, refer to Figure 2-4 Recommended communication cable.
3. To supply power from this product to the DALI bus line, short JP1/JP2.
4. If power is supplied from USB only, set JP3 to the L side. When connecting an AC adapter to this board, set JP3 to the H side.

   When supplying power from this product to the DALI bus line, it is recommended that power be supplied from the AC adapter.
5. Connect the USB cable and AC adapter to this product as described in section 2.4.4 "(a) When connecting".
6. Supply power to the DALI Control Gear.
7. Start up DALI Master Controller GUI on the PC. For the setting, refer to DALI Master Controller GUI User's Manual (R20UT0715).
8. When evaluation is complete, quit DALI Master Controller GUI.
9. Stop the power supply to the DALI Control Gear.
10. Stop power supply to this product.
11. Disconnect the DALI Control Gear.

The connection diagram is shown below.

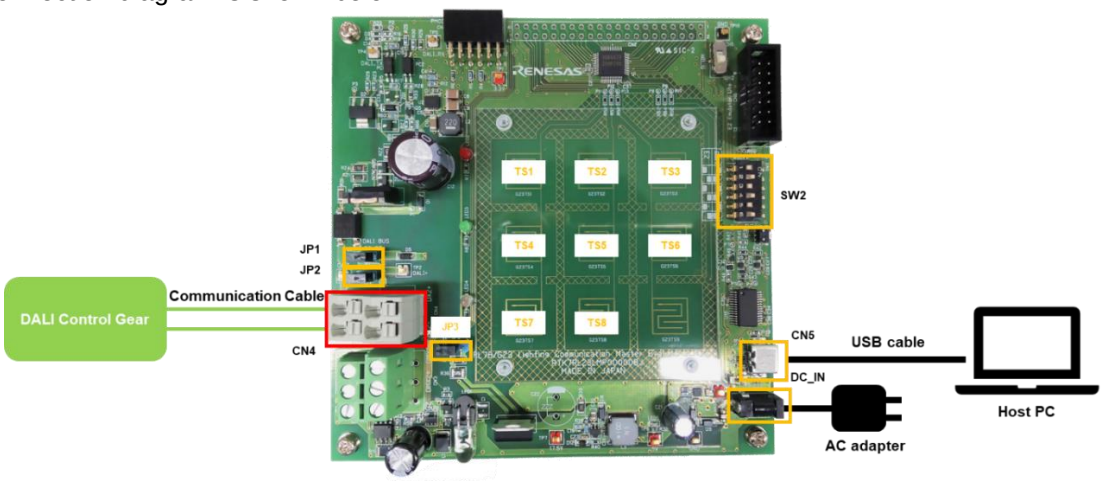

Figure 3-4 Connection for Operation with PC Connected (DALI Communication)

3.3.5 Resetting Firmware to the Factory Setting

If the program of RL78/G23 installed in this product is to be rewritten and restored to the shipping firmware again, download the firmware from the Renesas Electronics website and write it.

3.4 On-Chip Debugging

The RL78/G23 on this product supports on-chip debugging. On-chip debugging can be performed by using USB (virtual UART) or E2 emulator Lite.

Each step is shown below.

1. Set the operation mode. Refer to Table 3-5 Mode Switch Settings (USB) when using USB, and Table 3-6 Mode Switch Settings (E2 emulator Lite) when using E2 emulator Lite.

(a) Connection with USB

Table 3-5 Mode Switch Settings (USB)

Mode	SW2					
	1	2	3	4	5	6
COM	ON	OFF	ON	OFF	ON	OFF

(b) Connection with E2 emulator Lite

Table 3-6 Mode Switch Settings (E2 emulator Lite)

Mode	SW2					
	1	2	3	4	5	6
E2	OFF	ON	OFF	ON	OFF	ON

2. Connect peripheral devices to the product according to the following description.
   When E2 Emulator Lite is connected, power is supplied from an AC adapter (*1).
   When a USB cable is connected, AC adapter power supply is available.
   Jumper settings should be made according to the contents of Table 2-2 in Chapter 2.4.2.
   Be sure to follow the connection order of peripheral devices as described in (a) in Chapter 2.4.4.

(a) Connection with USB

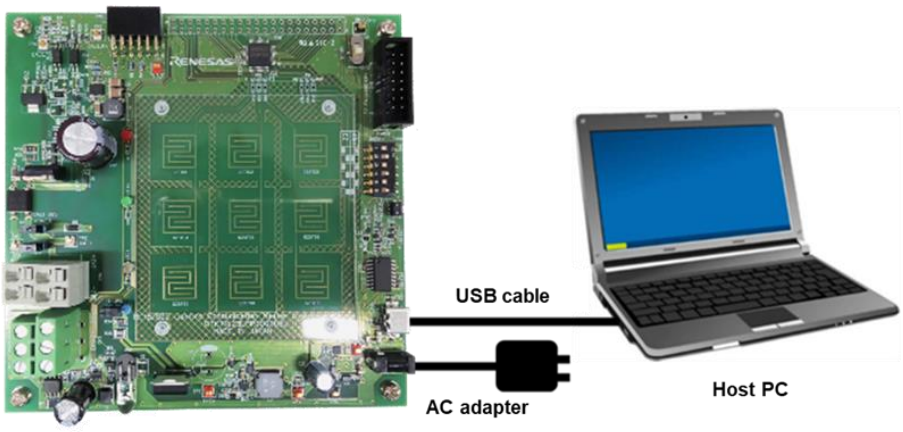

(b) Connection with E2 emulator Lite

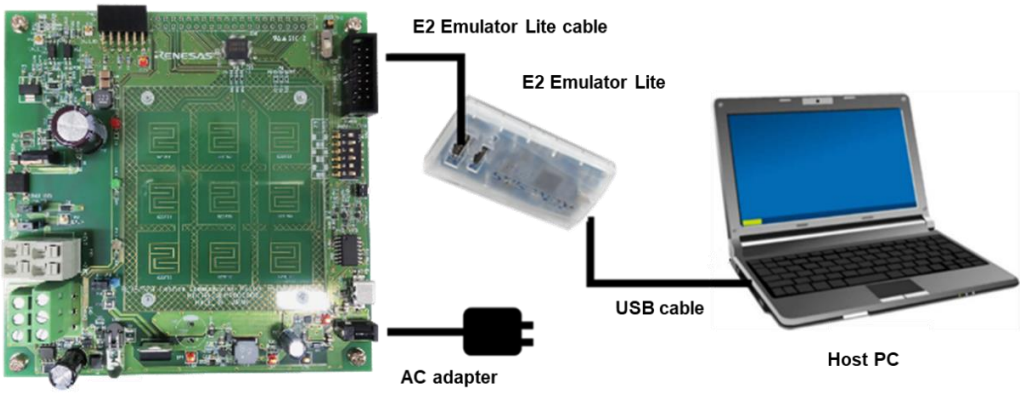

3. Start e² studio on the PC. Evaluation using the on-chip debug function can be performed by operating e studio. For details on the setting and usage of the on-chip debug function, refer to the manual for e² studio.
4. When evaluation is complete, quit e² studio.
5. Disconnect the USB cable from the PC. When the E2 emulator Lite has been used, disconnect the AC adapter first and then the E2 emulator Lite.

*1):This product should never be powered from the E2 Emulator Lite.
It may cause failure of the system power generation regulator.
(*2):Be sure to observe the following prohibitions when debugging.

- HIGH output is prohibited by default for the infrared LED control port (P41) pin.
  Software break is prohibited for the infrared LED control port (P41) pin at HIGH output.
  The current rating of the infrared LED may be exceeded, resulting in failure.
  Use a PWM output setting with a duty ratio of 50% or less.

- The initial setting of the DALI transmit port (P10) pin prohibits LOW output.
  Software break is prohibited when the DALI transmit port (P10) pin LOW output.
  Power supply to the CPU may be cut off.

Revision History	RL78/G23 Lighting Communication Master Evaluation Board User's Manual

Rev.	Date	Description	
		Page	Summary
1.00	Dec.5, 22	-	First Edition issued
1.01	Jan. 25, 23	-	Correction of some link errors in documents
1.02	Mar. 10, 23	1	Corrected errors of DALI multi-master compliant.

RL78/G23 Lighting Communication Master Evaluation Board User's Manual

Publication Date: Rev.1.02 Mar.10, 2023

Published by: Renesas Electronics Corporation

RL78/G23

Renesas Electronics Corporation

R20UT5072EJ0102