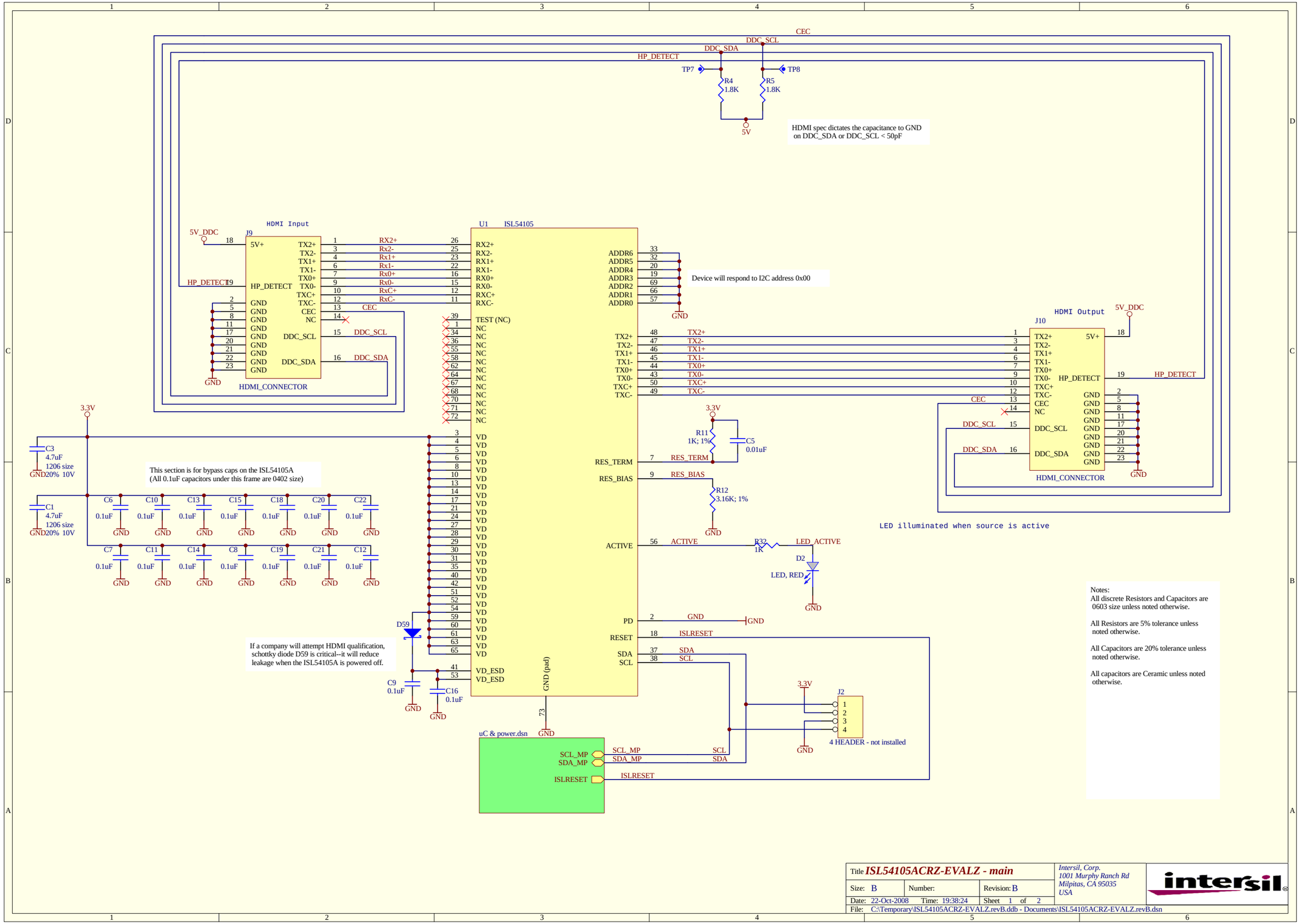


Notes:
All discrete Resistors and Capacitors are 0603 size unless noted otherwise.

All Resistors are 5% tolerance unless noted otherwise.

All Capacitors are 20% tolerance unless noted otherwise.

All capacitors are Ceramic unless noted otherwise.

| | | | |
|---|---|---|---|
| Title *ISL54105ACRZ-EVALZ - main* | | | *Intersil, Corp.* *1001 Murphy Ranch Rd* *Milpitas, CA 95035* *USA* |
| Size: B | Number: | Revision: B | |
| Date: 22-Oct-2008 | Time: 19:38:24 | Sheet 1 of 2 | |
| File: C:\Temporary\ISL54105ACRZ-EVALZ.revB.ddb - Documents\ISL54105ACRZ-EVALZ.revB.dsn | | | |

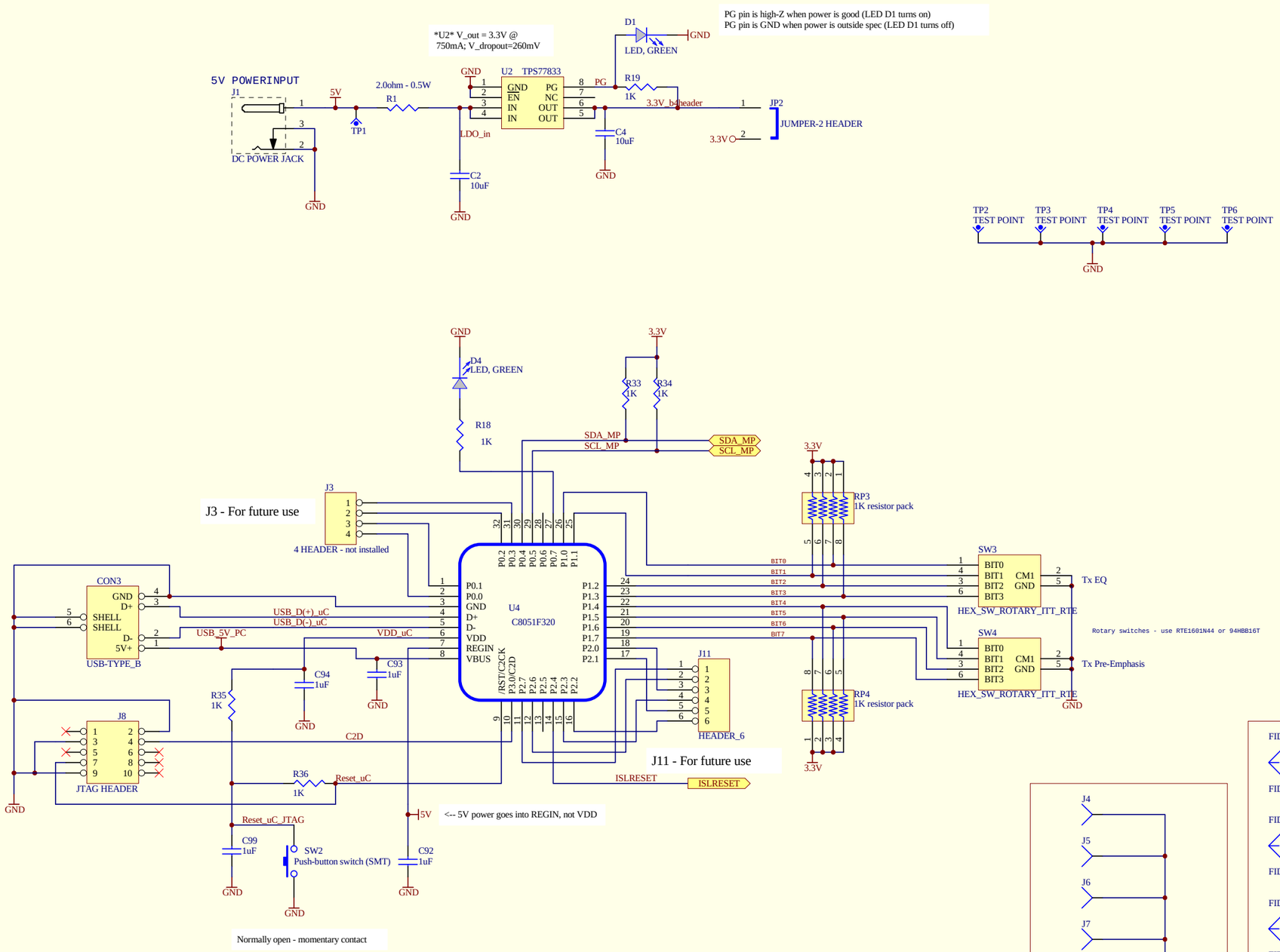


| | | | |
|---|---|---|---|
| Title | *ISL54105ACRZ-EVALZ - power/uC* | | *Intersil, Corp.* *1001 Murphy Ranch Rd* *Milpitas, CA 95035* *USA* |
| Size: B | Number: | Revision: B | |
| Date: 22-Oct-2008 | Time: 19:38:24 | Sheet 2 of 2 | |
| File: C:\Temporary\ISL54105ACRZ-EVALZ.revB.ddb - Documents\uC & power.dsn | | | |