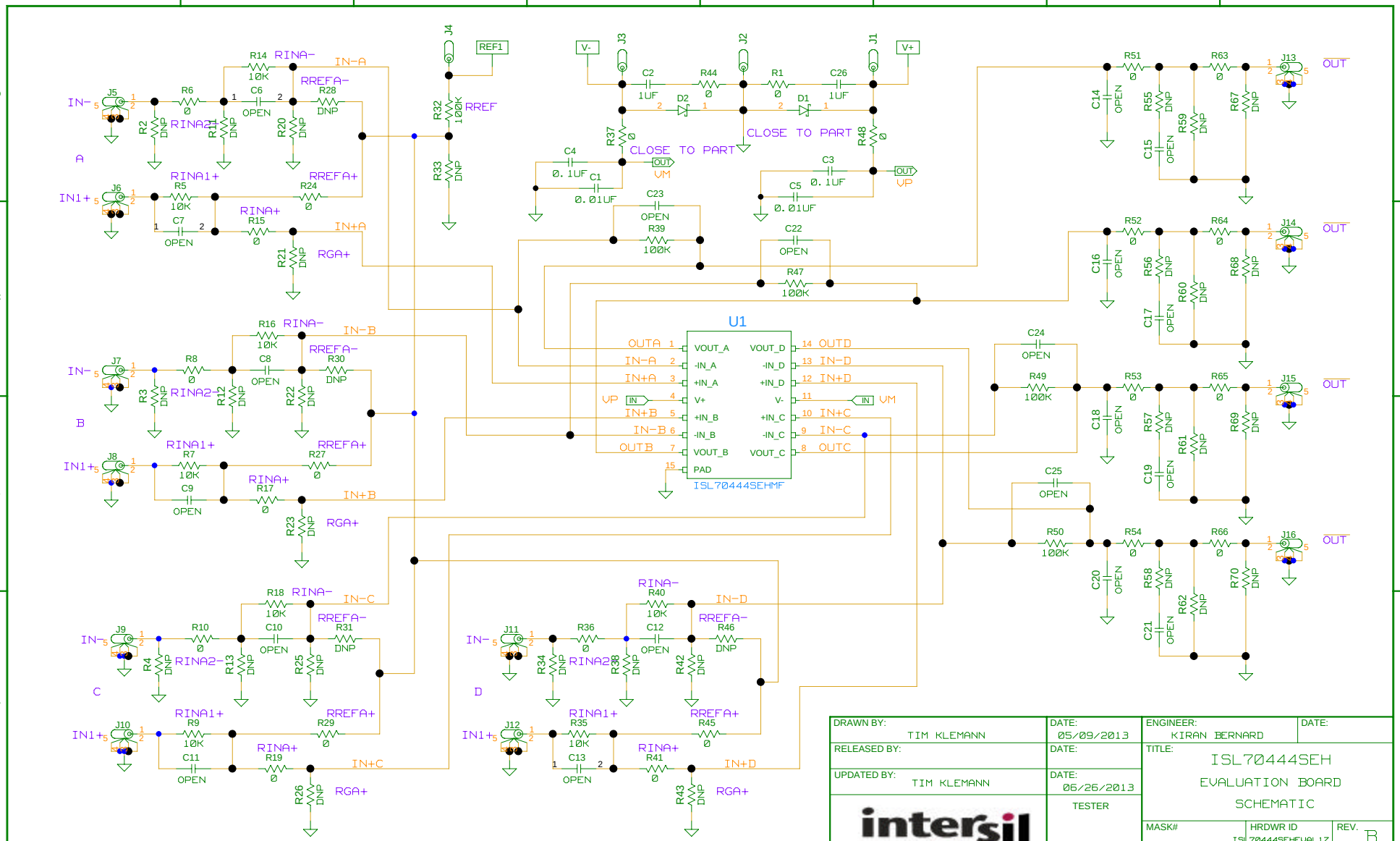

DRAWN BY: TIM KLEMANN	DATE: 05/09/2013	ENGINEER: KIRAN BERNARD	DATE:
RELEASED BY:	DATE:	TITLE: ISL70444SEH EVALUATION BOARD SCHEMATIC	
UPDATED BY: TIM KLEMANN	DATE: 06/26/2013		
intersil	TESTER	MASK#	HRDWR ID ISL70444SEHEVAL1Z / REV. B
		FILENAME: \\ISL70444/ISL70444SEHEVAL1Z	SHEET 1 OF 1