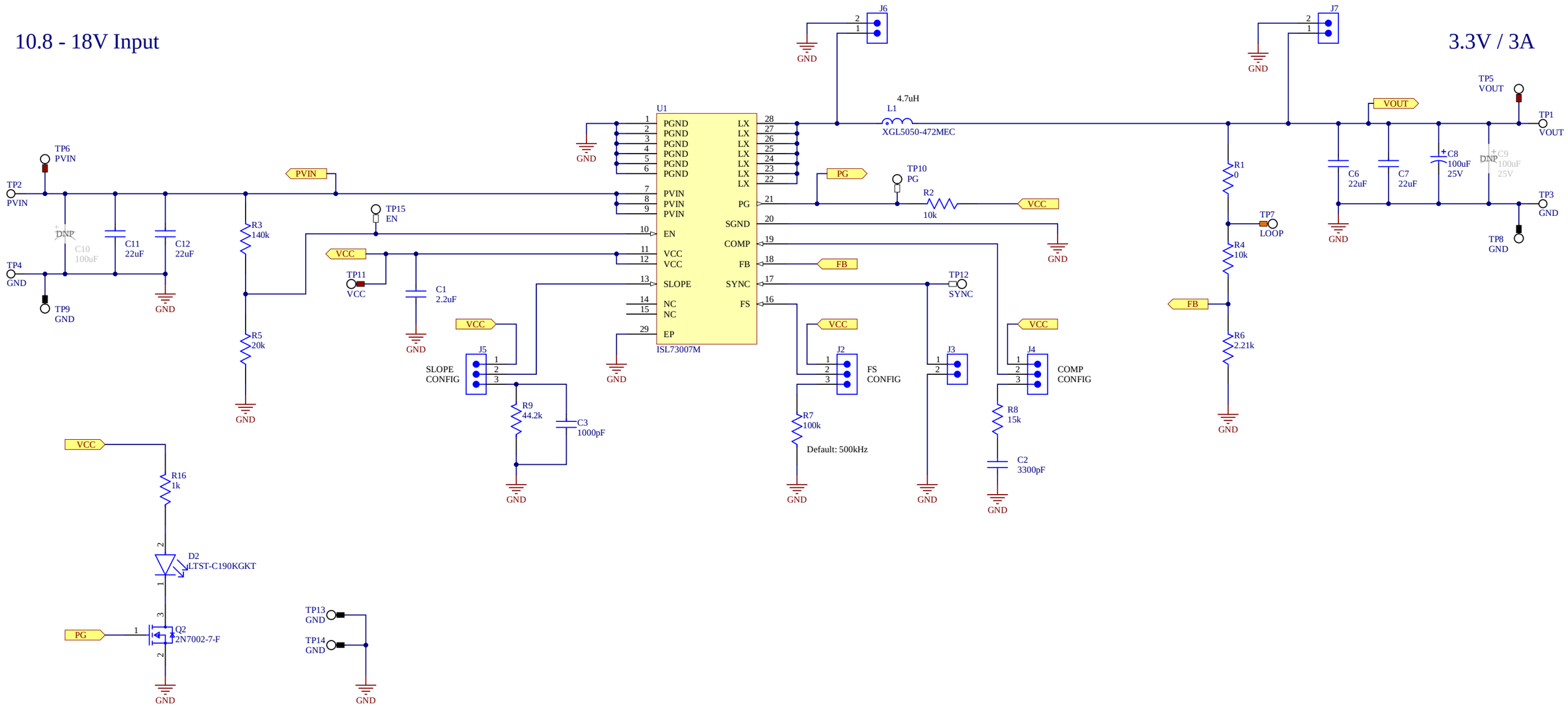

ISL73007MEVAL1ZB.PrjPcb	
Version:	Document Revision: B
Release Date: --/--/--	Sheet 1 of 2
File: ISL73007MEVAL1ZB_1.SchDoc	

RENESAS
www.renesas.com

60 | Last Updated: 1/3/2025

12V External Supply

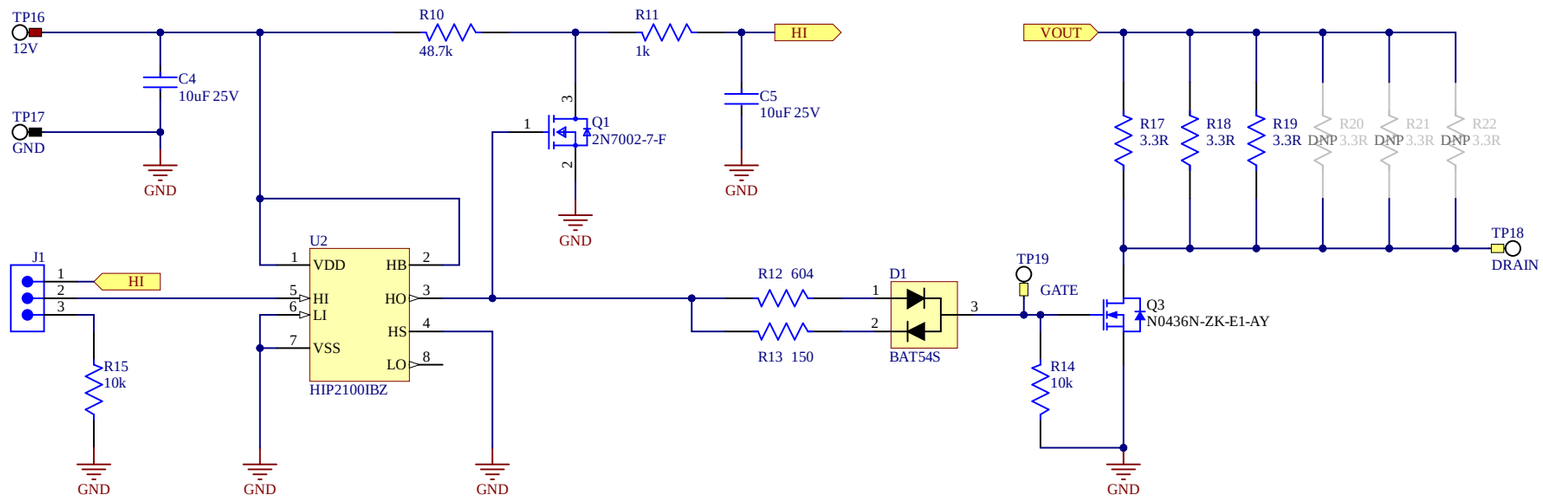

MP1 MP2 MP3 MP4
DNP DNP DNP DNP

Title	ISL73007MEVAL1ZB.PrjPcb		
Size: A3	Drawn by: B Genereaux	Revision:	
Date: 1/3/2025	Time: 11:02:36 AM	Sheet 2 of 2	
File: ISL73007MEVAL1ZB_2.SchDoc			

RENESAS
www.renesas.com