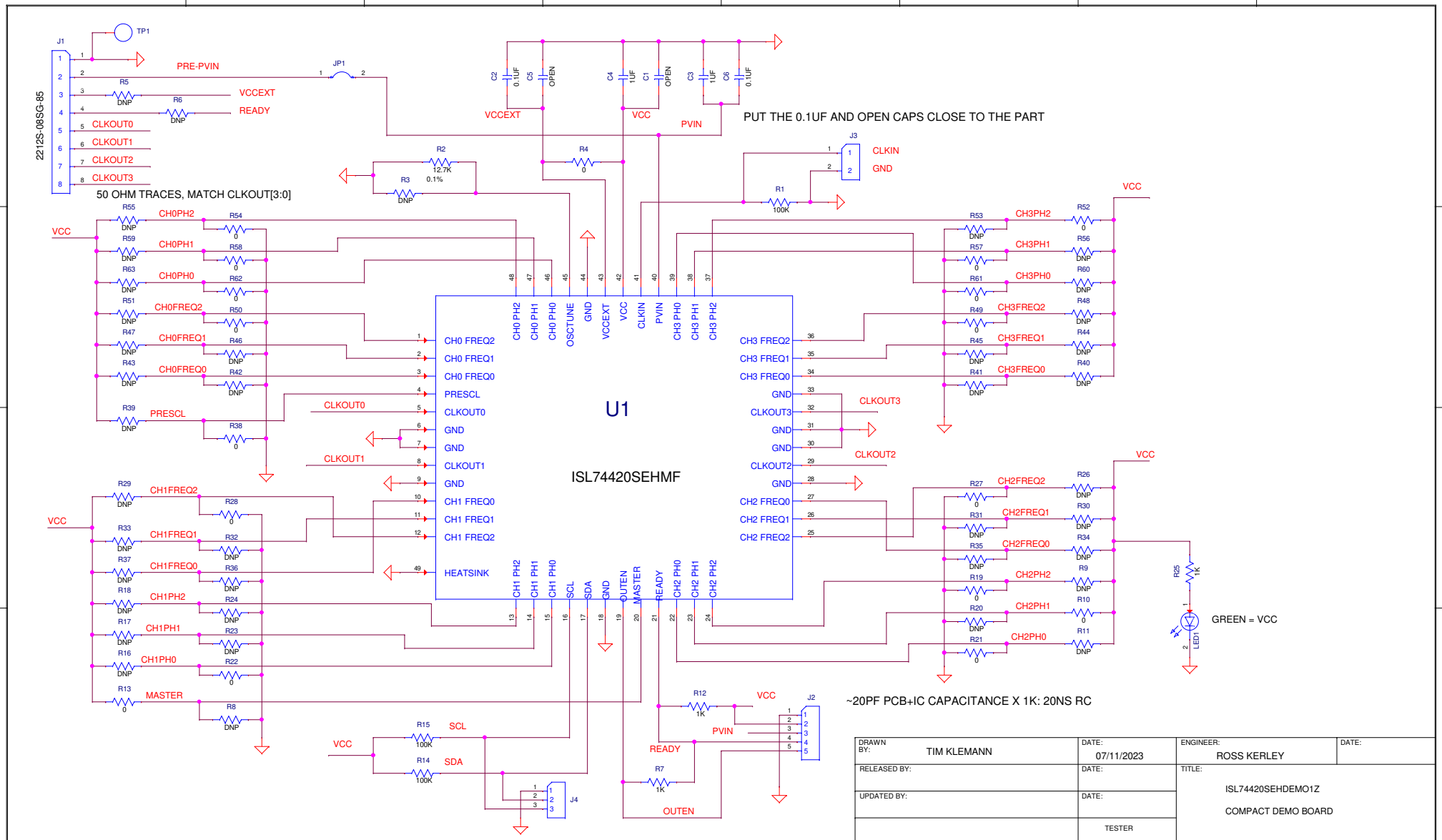

DRAWN BY: TIM KLEMANN	DATE: 07/11/2023	ENGINEER: ROSS KERLEY	DATE:
RELEASED BY:	DATE:	TITLE: ISL74420SEHDEMO1Z COMPACT DEMO BOARD	
UPDATED BY:	DATE:		
	TESTER	MASK# / HRDWR ID	REV. A
		FILENAME:	SHEET 1 OF 1