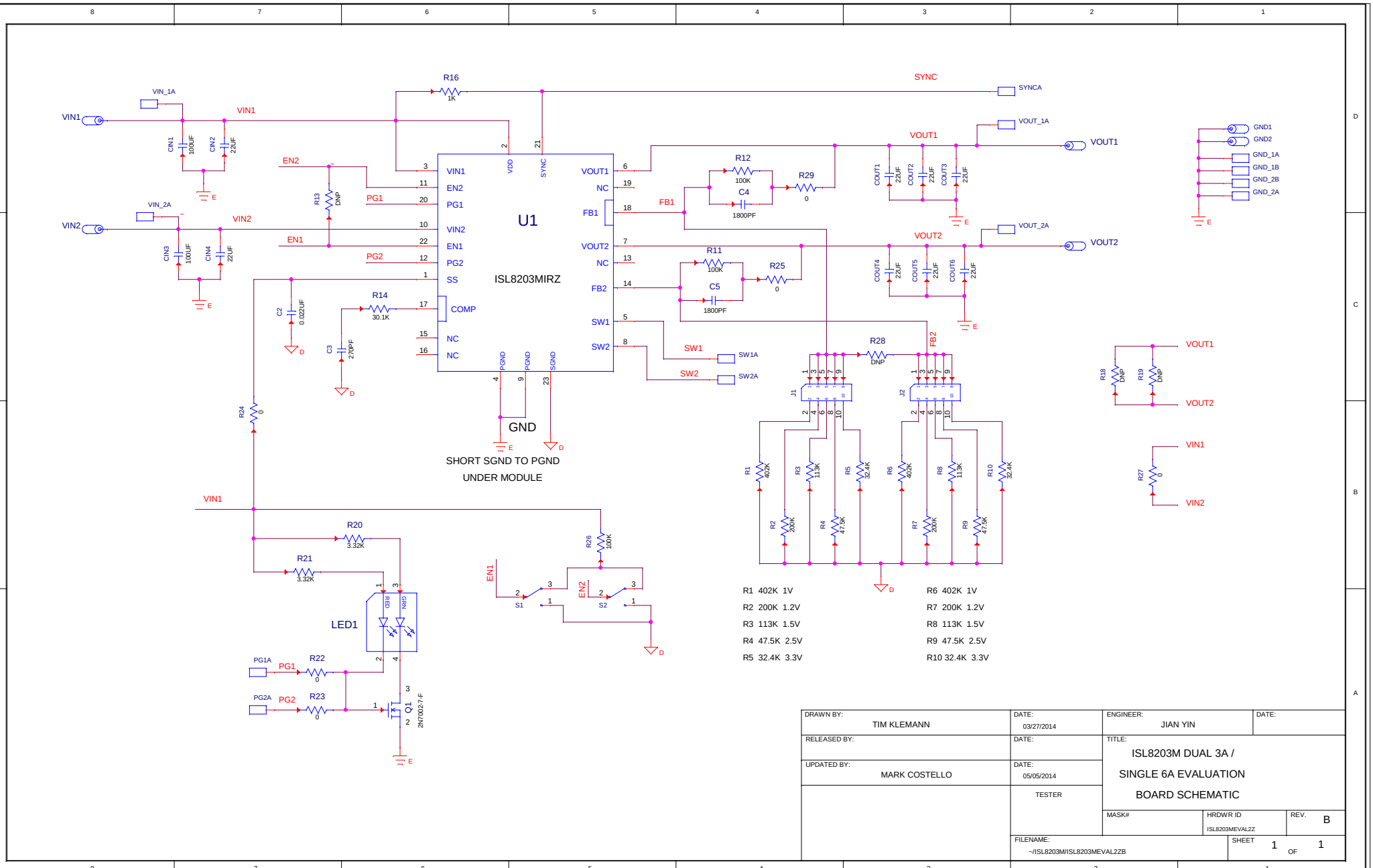

DRAWN BY: TIM KLEMANN	DATE: 03/27/2014	ENGINEER: JIAN YIN	DATE:
RELEASED BY:	DATE:	TITLE: ISL8203M DUAL 3A / SINGLE 6A EVALUATION BOARD SCHEMATIC	
UPDATED BY: MARK COSTELLO	DATE: 05/05/2014		
	TESTER	MASK#	HRDWR ID ISL8203MEVAL2Z / REV. B
		FILENAME: ~/ISL8203M/ISL8203MEVAL2ZB	SHEET 1 OF 1