# Package Outline Drawing

## L20.4x4I

**20 LEAD DUAL FLAT NO-LEAD PLASTIC PACKAGE**

**Rev 1, 3/15**

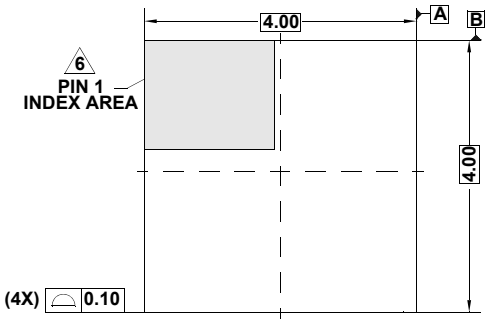


TOP VIEW

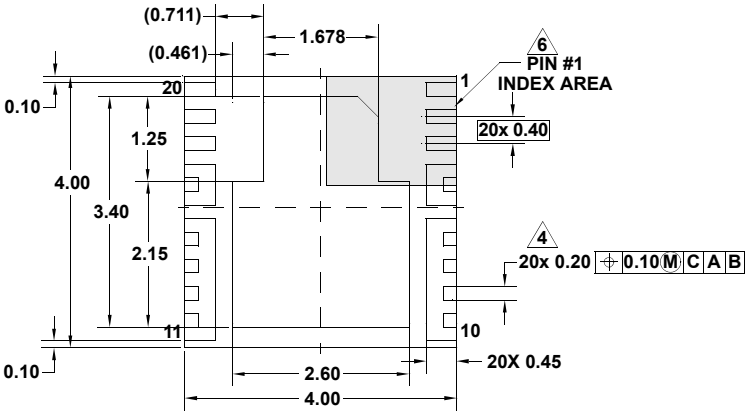


BOTTOM VIEW

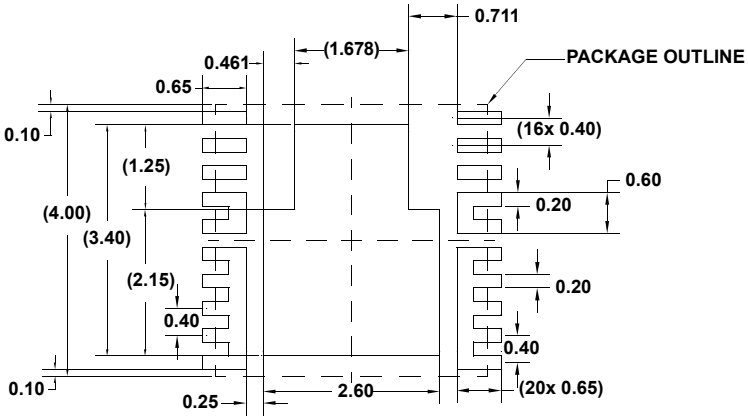


TYPICAL RECOMMENDED LAND PATTERN

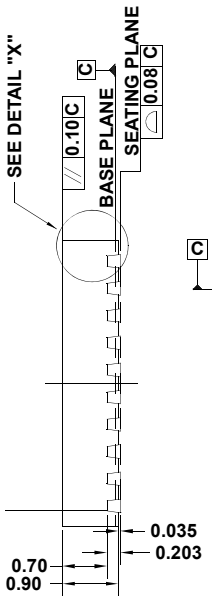


SIDE VIEW

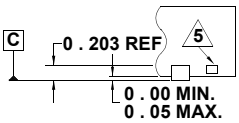


DETAIL "X"

NOTES:

1. Dimensions are in millimeters.
   Dimensions in ( ) for Reference Only.
2. Dimensioning and tolerancing conform to ASME Y14.5m-1994.
3. Unless otherwise specified, tolerance : Decimal ± 0.05
4. Dimension applies to the metallized terminal and is measured between 0.15mm and 0.30mm from the terminal tip.
5. Tiebar shown (if present) is a non-functional feature and may be located on any of the 4 sides (or ends).
6. The configuration of the pin #1 identifier is optional, but must be located within the zone indicated. The pin #1 identifier may be either a mold or mark feature.
7. JEDEC reference drawing: MO-229.