Package Outline Drawing

L24.4x5F

24 LEAD QUAD FLAT NO-LEAD PLASTIC PACKAGE

Rev 0, 5/14

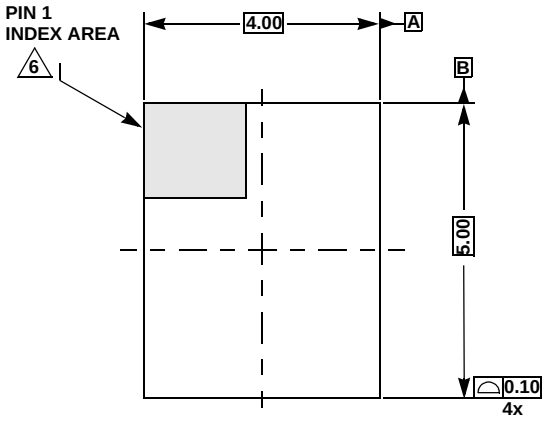

TOP VIEW

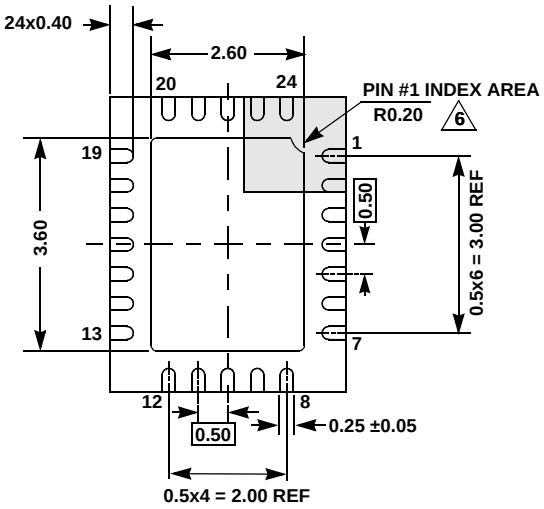

BOTTOM VIEW

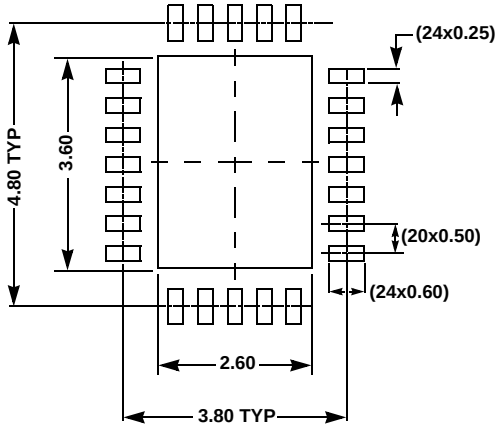

TYPICAL RECOMMENDED LAND PATTERN

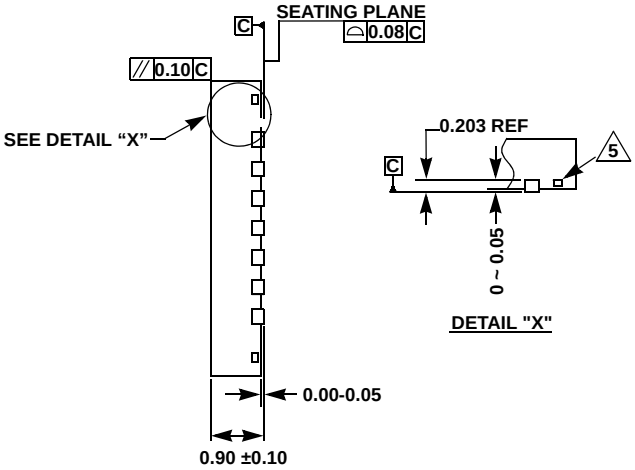

SIDE VIEW

NOTES:

1. Dimensions are in millimeters.
   Dimensions in ( ) are for Reference Only.
2. Dimensioning and tolerancing conform to ASMEY14.5m-1994.
3. Unless otherwise specified, tolerance: Decimal ± 0.05
4. Dimension applies to the metallized terminal and is measured between 0.20mm and 0.30mm from the terminal tip.
5. Tiebar shown (if present) is a non-functional feature.
6. The configuration of the pin #1 identifier is optional, but must be located within the zone indicated. The pin #1 identifier may be either a mold or mark feature.