REVISIONS			
REV	DESCRIPTION	DATE	APPROVED
00	INITIAL RELEASE	2/12/16	J.HUA

BASED ON JEDEC MO-229

1. DIMENSIONS (IN MILLIMETERS)

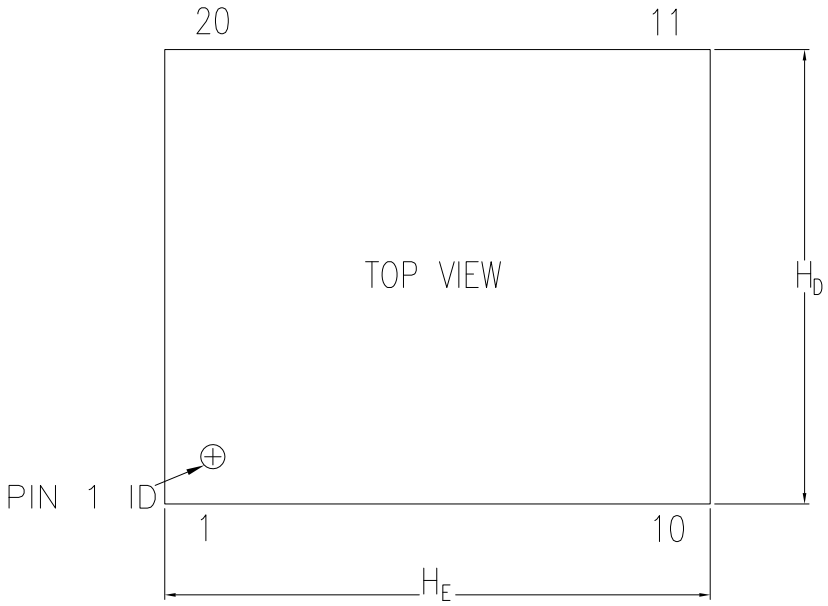

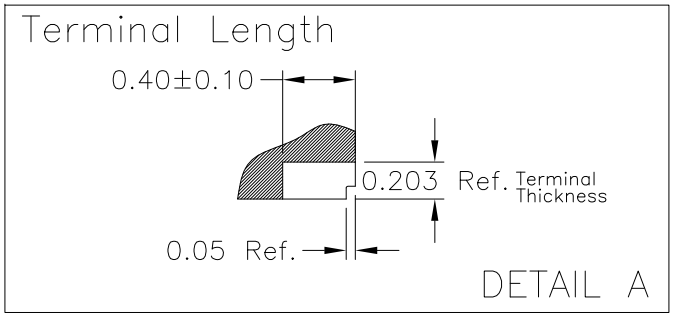

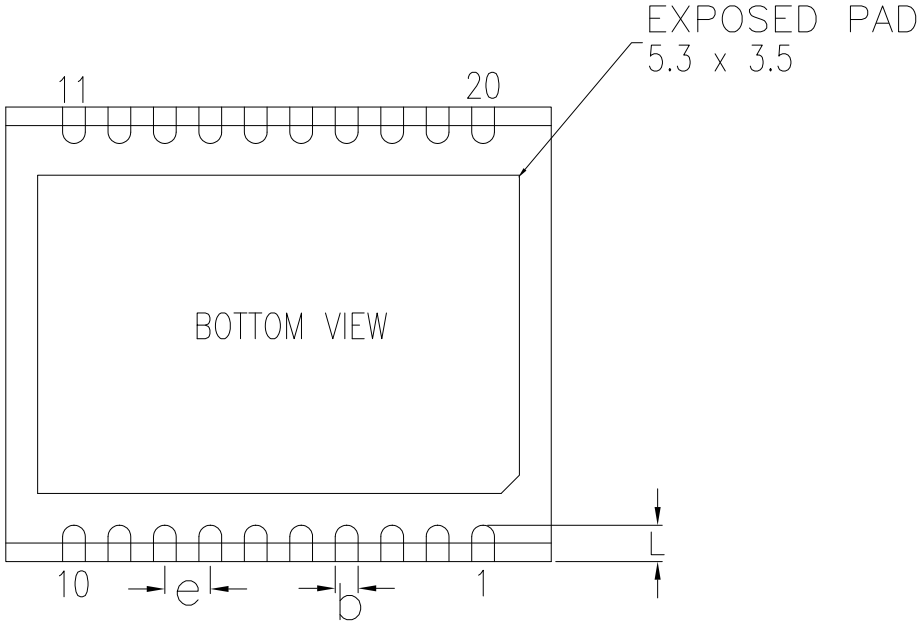

2. WEIGHT ≤ 0.05g
3. PACKAGE BODY MATERIAL LOW STRESS EPOXY
4. LEAD MATERIAL Cu ALLOY
5. LEAD FINISH SOLDER PLATING

DIMENSIONS	MIN.	MAX.
A	0.8	0.9
A1	0	0.05
b	0.2	0.3
e	0.5 nom	
H_D	4.9	5.1
H_E	5.9	6.1
L	0.3	0.5

TOLERANCES UNLESS SPECIFIED
DECIMAL XX± XXX± XXXX±
ANGULAR ±

IDT™ www.IDT.com
6024 Silver Creek Valley Rd
San Jose, CA 95138
PHONE: (408) 727-6116
FAX: (408) 492-8674

APPROVALS	DATE
DRAWN RAC	2/12/16
CHECKED	

TITLE NJG20 PACKAGE OUTLINE
6.0 x 5.0 mm BODY , EPAD 5.3 x 3.5
0.5 mm PITCH DFN

SIZE C | DRAWING No. PSC-4643 | REV 00

DO NOT SCALE DRAWING | SHEET 1 OF 1