Package Outline Drawing

V352.27x27

352 PLASTIC BALL GRID ARRAY PACKAGE

Rev 0, 3/11

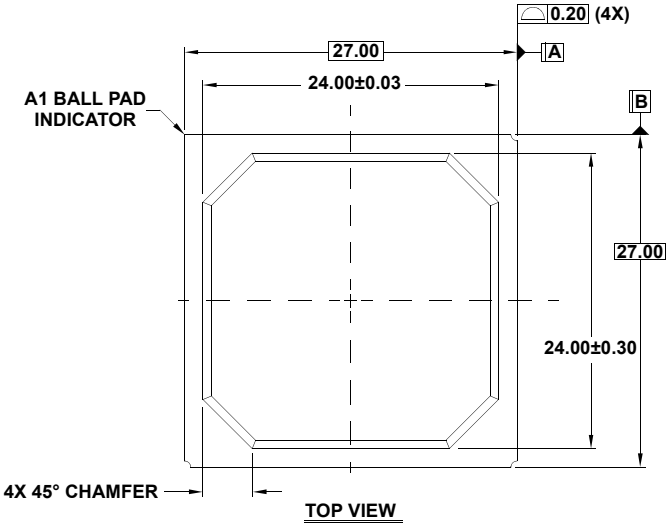

TOP VIEW

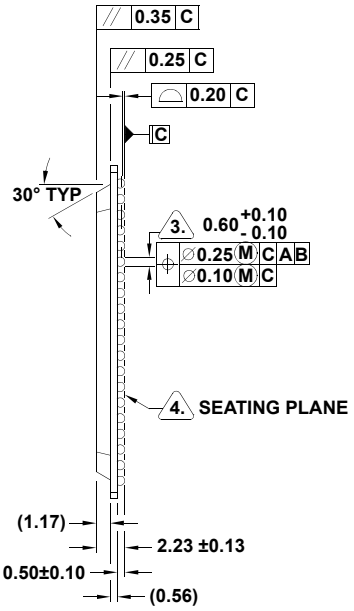

SIDE VIEW

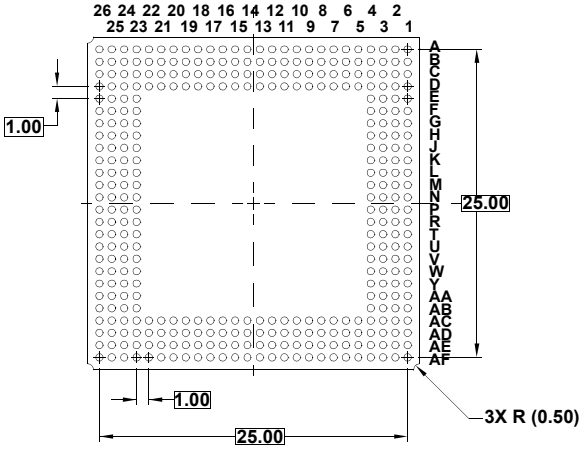

BOTTOM VIEW

NOTES:

1. All dimensions and tolerances conform to ASME Y14.5-1994.
2. Dimensions are in millimeters.
3. Dimension is measured at the maximum solder ball diameter, parallel to primary datum C.
4. Primary datum C and seating plane are defined by the spherical crowns of the solder balls.
5. This drawing confirms to the JEDEC registered outline MS-034 variation AAL-1.
6. Dimensions in ( ) are for reference only

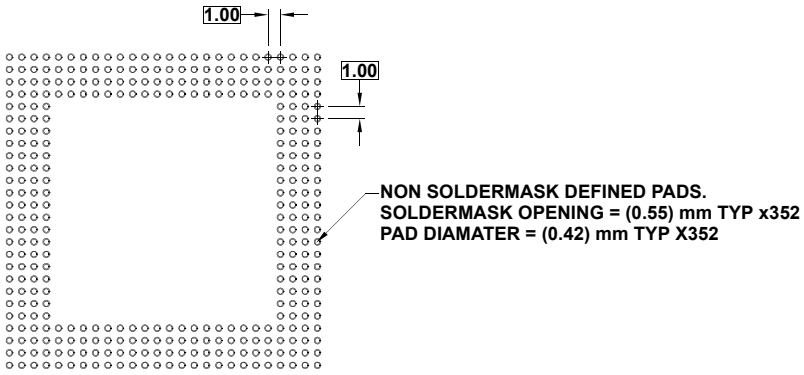

TYPICAL RECOMMENDED LAND PATTERN