Package Outline Drawing

M16.3A
16 LEAD WIDE BODY SMALL OUTLINE PLASTIC PACKAGE (SOICW)
Rev 1, 6/17

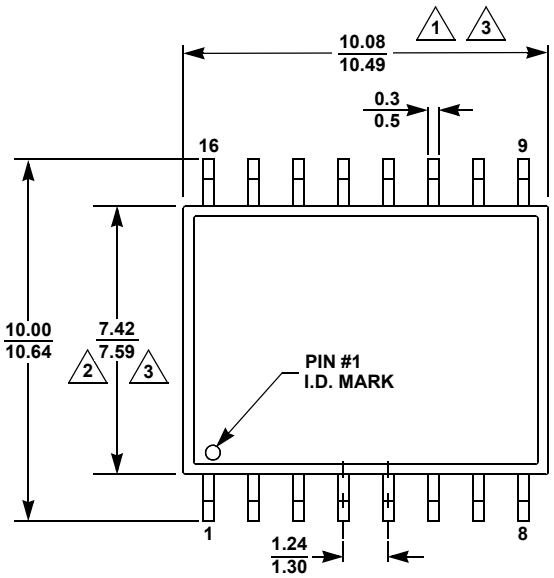

TOP VIEW

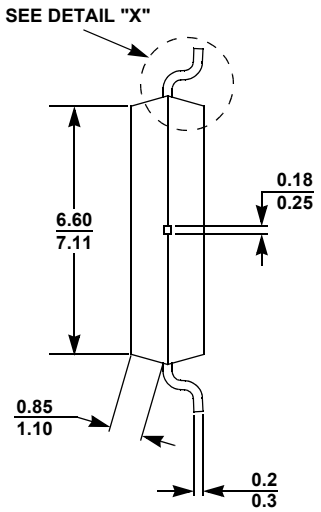

END VIEW

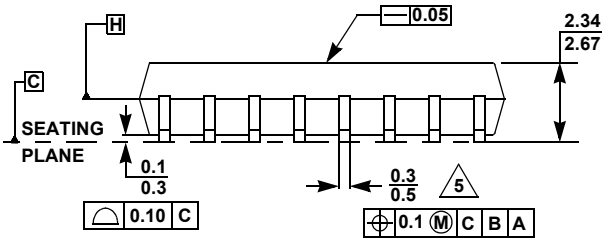

SIDE VIEW

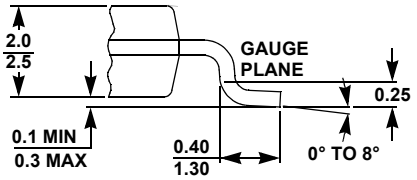

DETAIL X

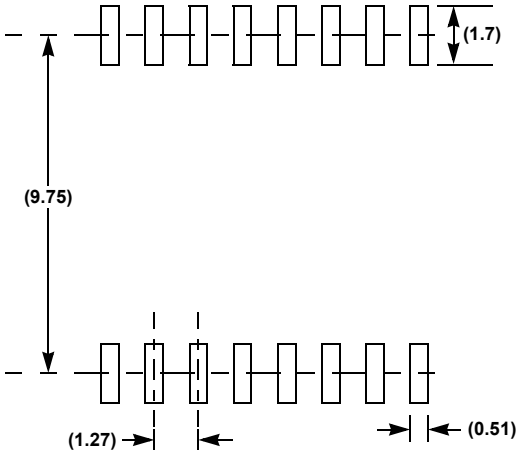

TYPICAL RECOMMENDED LAND PATTERN

NOTES:

1. Dimension does not include mold flash, protrusions, or gate burrs. Mold flash, protrusions, or gate burrs shall not exceed 0.15 per side.
2. Dimension does not include interlead flash or protrusion. Interlead flash or protrusion shall not exceed 0.25 per side.
3. Dimensions are measured at datum plane H.
4. Dimensioning and tolerancing per ASME Y14.5M-1994.
5. Dimension does not include dambar protrusion.
6. Dimension in ( ) are for reference only.
7. Pin spacing is a BASIC dimension; tolerances do not accumulate.
8. Dimensions are in mm.