IDTP9035A A5 DEMO PCB V4.1 Schematic

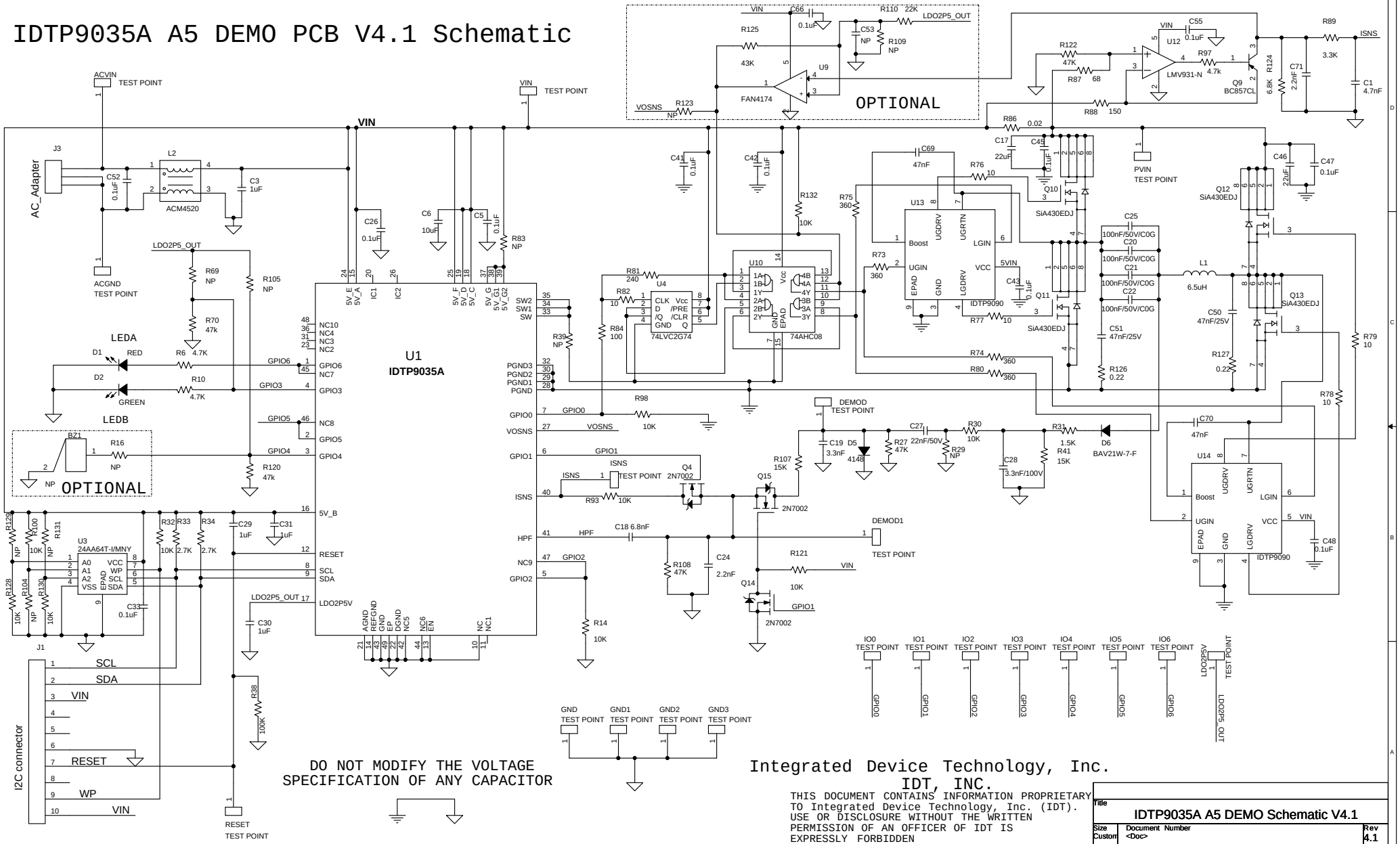

Integrated Device Technology, Inc.
IDT, INC.

THIS DOCUMENT CONTAINS INFORMATION PROPRIETARY TO Integrated Device Technology, Inc. (IDT). USE OR DISCLOSURE WITHOUT THE WRITTEN PERMISSION OF AN OFFICER OF IDT IS EXPRESSLY FORBIDDEN

Title	IDTP9035A A5 DEMO Schematic V4.1	
Size Custom	Document Number <Doc>	Rev 4.1
Date: Wednesday, May 08, 2013	13:46:58	Sheet 1 of 2