Rev	Comment	Date
0100	MP release	22. May 2025
*		

RL78/L23 Fast Prototyping Board

RTK7RLL230S00001BJ

Table of Contents:

Page 1:Top

Page 2:Pmod 1, Pmod 2, Arduino UNO, MCU Header , LCD Panel , LCD Header

Page 3:MCU , CLOCK , LED , SW , Touch, LCD Pattern , Grove

Page 4:POWER, USB-UART , Emulator , Reset

Page 5:Appendix (User LCD Power Configurations)

<<Note>>

Figure in below shows Jumper Solder Bridge and Jumper Trace Cut.

(Schematic symbol and footprint)

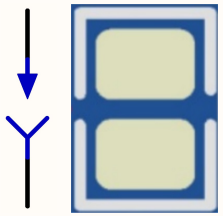

Jumper Solder Bridge

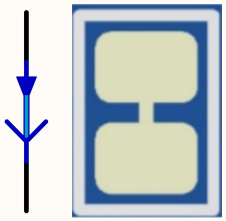

Jumper Trace Cut

"DNF" marking means that component is not fitted by default.

※GND shield

※※Shortest connection and GND shield

RENESAS	Document Number: D020662_04
Title: FPB-RL78L23	Variant: MP
Sheet: 1:Title Page	Size: A3
Date: 2025/05/22 Time: 10:28:20	Sheet 1 of 5 Revision: 0100

Pmod1

Type 2A/3A/(6A)

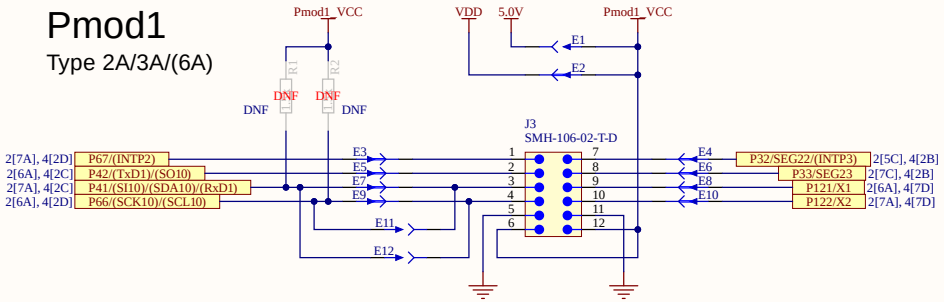

Pmod2

Type 6A/(2A/3A)

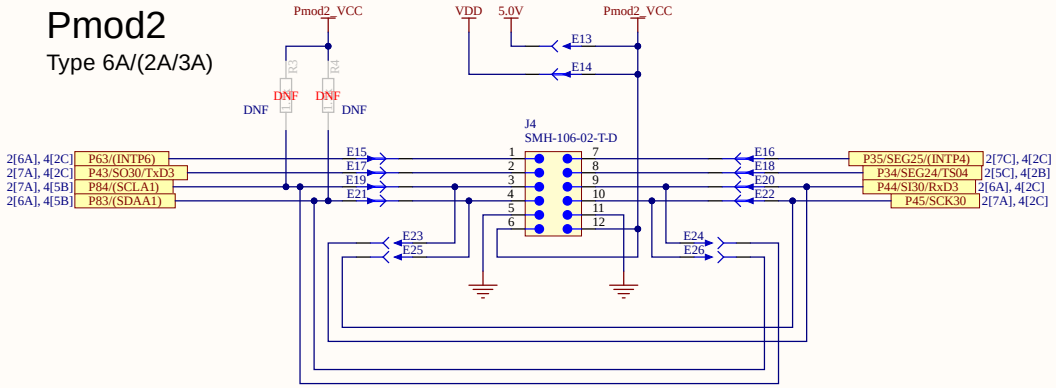

Arduino UNO R3

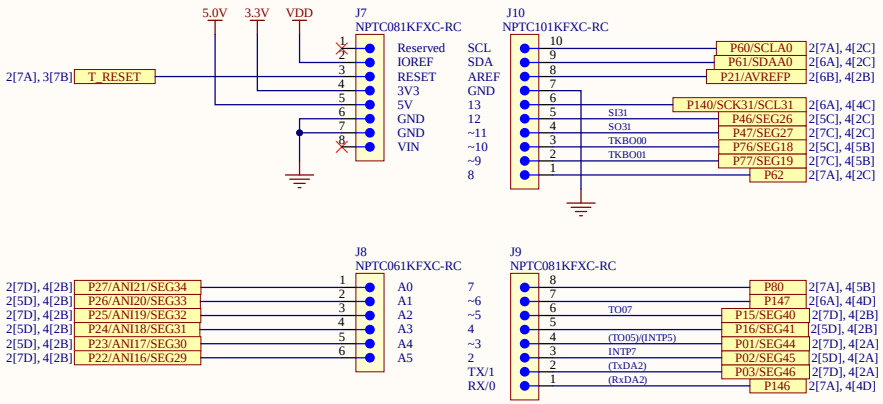

MCU Header

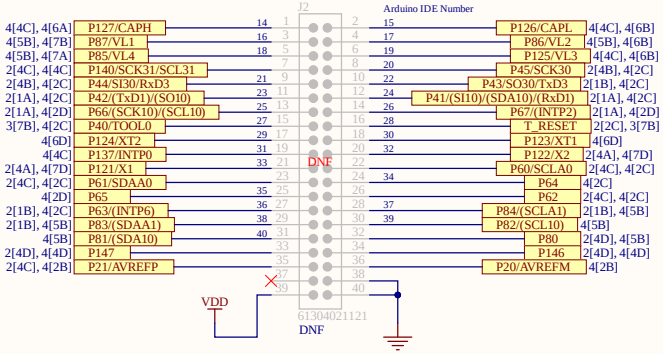

LCD Panel

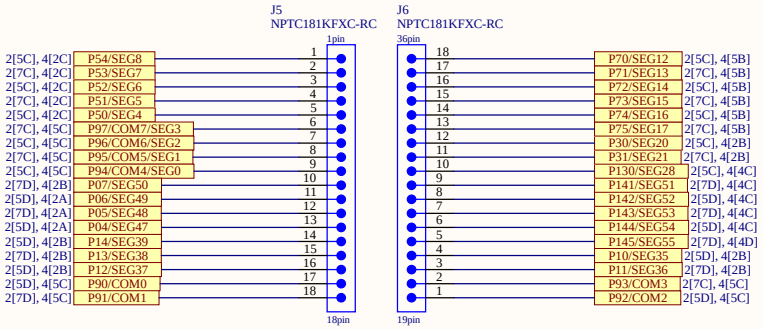

LCD Header

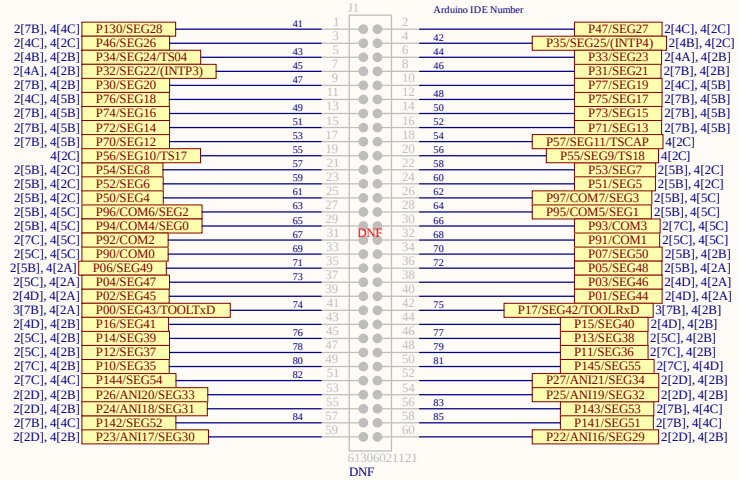

RENESAS	Document Number: D020662_04	
Title: FPB-RL78L23		Variant: MP
Sheet: 2:Pmod , Arduino , MCU Header , LCD Panel , LCD Header		Size: A3
Date: 2025/05/22	Time: 10:28:20	Sheet 2 of 5 Revision: 0100

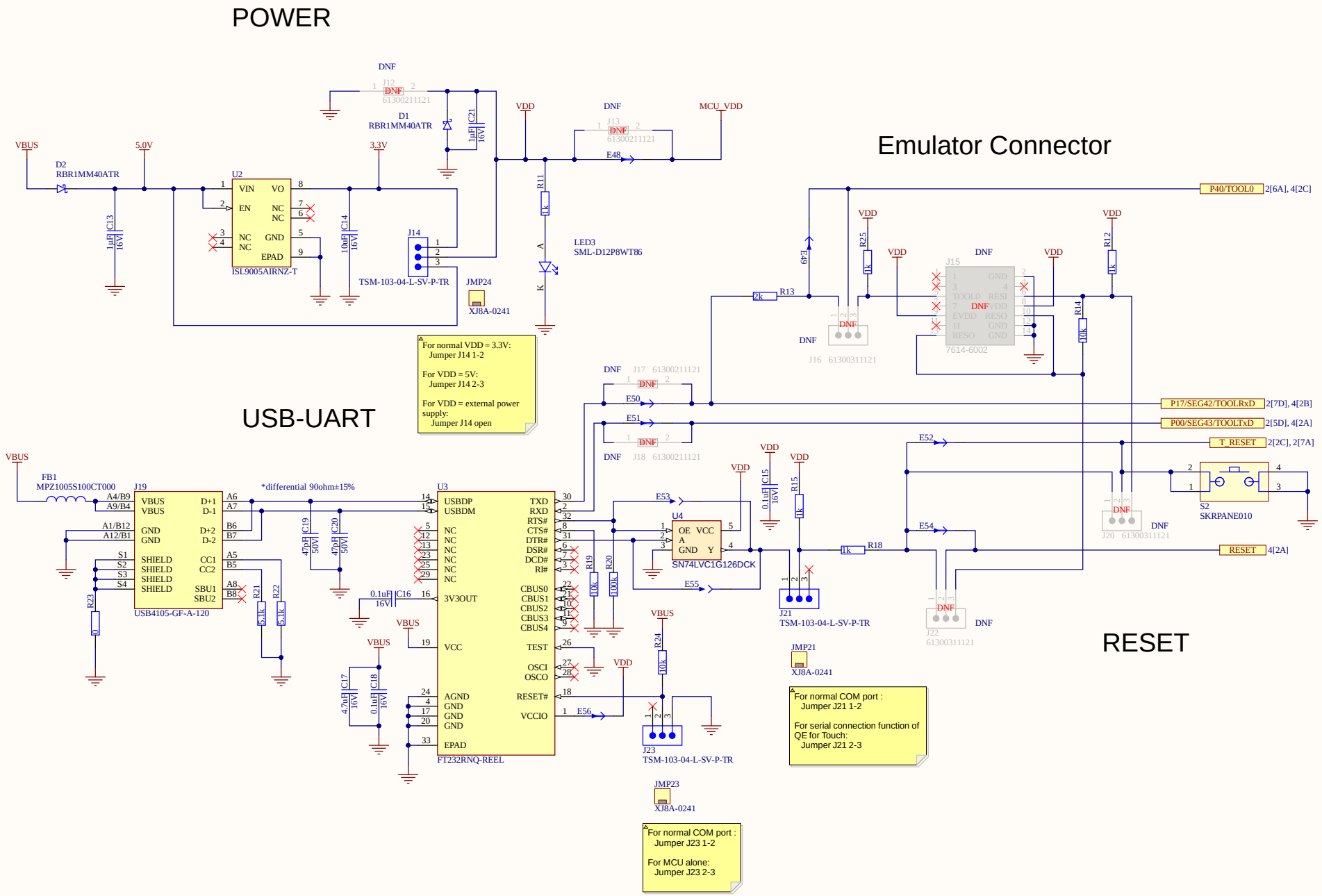
POWER
Emulator Connector
USB-UART
RESET
VBUS
5.0V
3.3V
VDD
MCU_VDD
D2
RBR1MM40ATR
D1
RBR1MM40ATR
U2
VIN
VO
EN
NC
GND
EPAD
ISL9005AIRNZ-T
J14
TSM-103-04-L-SV-P-TR
JMP24
XJ8A-0241
LED3
SML-D12P8WT86
J12
J13
E48
P40/TOOL0
2[6A], 4[2C]
P17/SEG42/TOOLRxD
2[7D], 4[2B]
P00/SEG43/TOOLTxD
2[5D], 4[2A]
T_RESET
2[2C], 2[7A]
RESET
4[2A]
J15
7614-6002
J16
J17
J18
J20
J21
J22
J23
S2
SKRPANE010
FB1
MPZ1005S100CT000
J19
USB4105-GF-A-120
*differential 90ohm±15%
U3
FT232RNQ-REEL
U4
SN74LVC1G126DCK
JMP21
JMP23
For normal VDD = 3.3V:
Jumper J14 1-2
For VDD = 5V:
Jumper J14 2-3
For VDD = external power supply:
Jumper J14 open
For normal COM port :
Jumper J21 1-2
For serial connection function of QE for Touch:
Jumper J21 2-3
For normal COM port :
Jumper J23 1-2
For MCU alone:
Jumper J23 2-3
RENESAS
Document Number:
D020662_04
Title: FPB-RL78L23
Variant: MP
Sheet: 4:POWER, USB-UART , Emulator , Reset
Size: A3
Date: 2025/05/22 Time: 10:28:20
Sheet 3 of 5
Revision: 0100

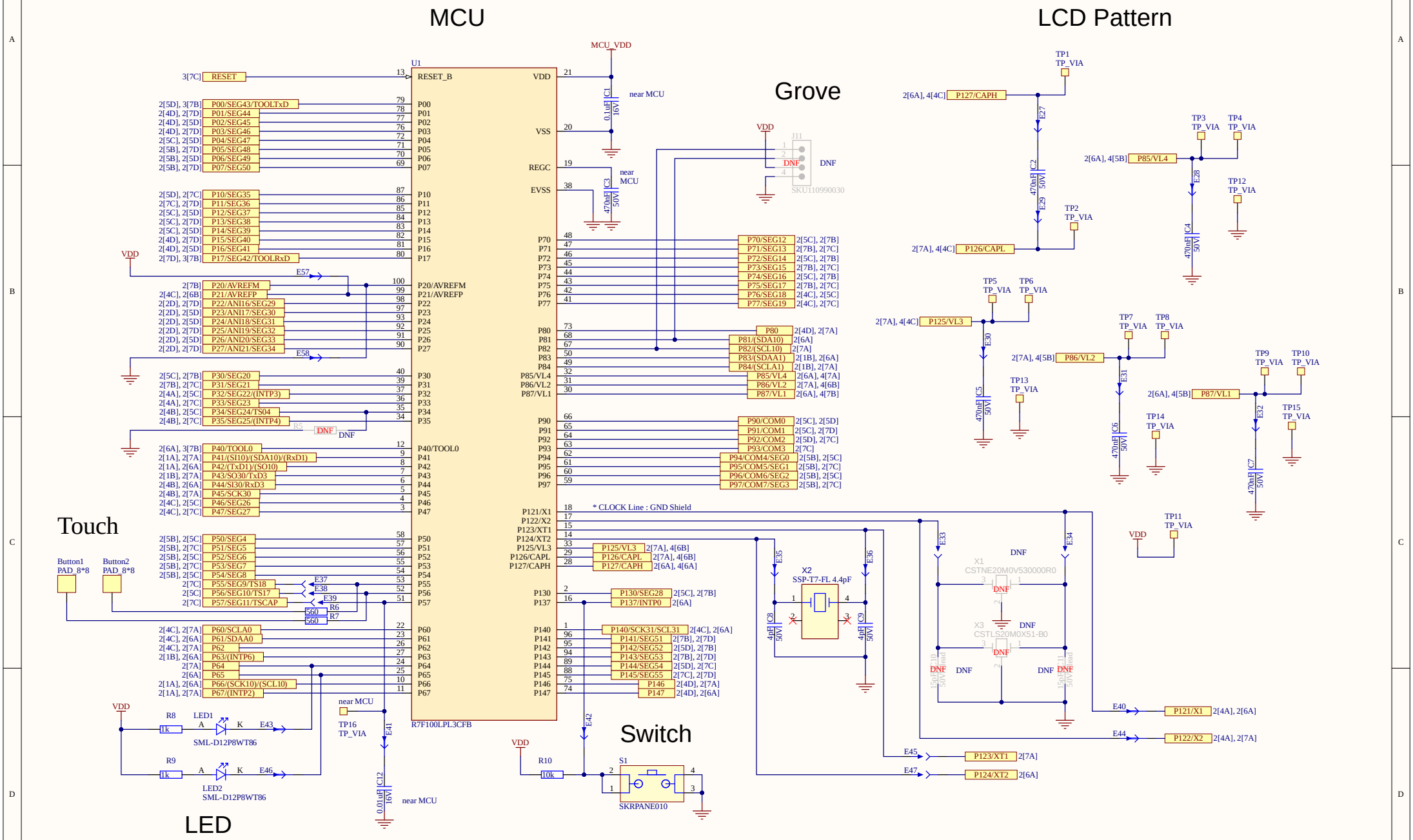
MCU
LCD Pattern
Grove
Touch
Switch
LED
U1
R7F100LPL3CFB
MCU_VDD
VDD
VSS
REGC
EVSS
RESET_B
near MCU
* CLOCK Line : GND Shield
Button1
PAD_8*8
Button2
PAD_8*8
SML-D12P8WT86
LED1
LED2
SKRPANE010
S1
J11
SKU110990030
X1
CSTNE20M0V530000R0
X2
SSP-T7-FL 4.4pF
X3
CSTLS20M0X51-B0
DNF
Document Number:
D020662_04
Title: FPB-RL78L23
Variant: MP
Sheet: 3:MCU , CLOCK , LED , SW , Touch , LCD Pattern , Grove
Size: A3
Date: 2025/05/22 Time: 10:28:20
Sheet 4 of 5
Revision: 0100

Appendix (User LCD Power Configurations)

In the case of 1/3 bias method

Example-1 External resistance division method

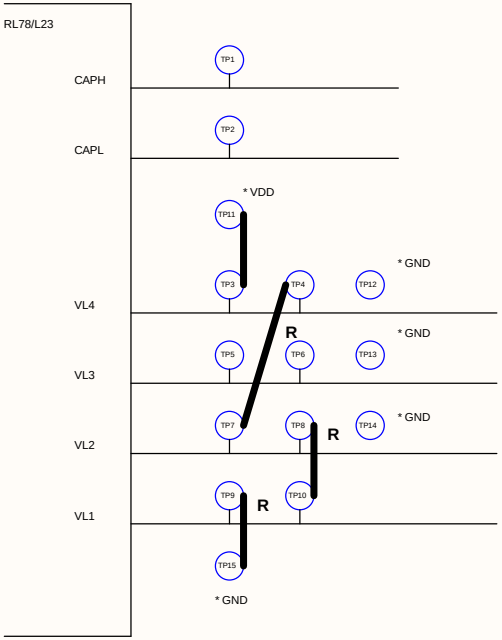

Example-2 Internal Voltage Boosting Method

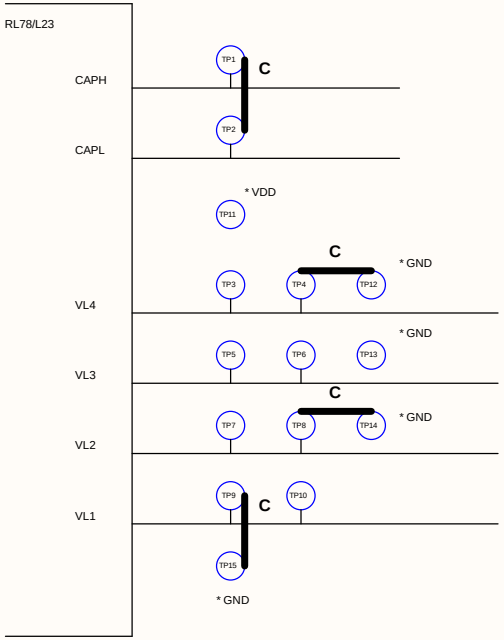

Example-3 Capacitor Split Method

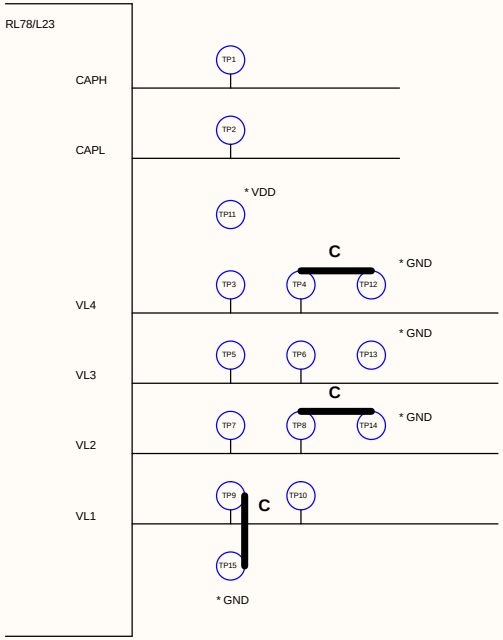

RENESAS	Document Number: D020662_04	
Title: FPB-RL78L23	Variant: MP	
Sheet: 5:Appendix (User LCD Power Configurations)		Size: A3
Date: 2025/05/22 Time: 10:28:20	Sheet 5 of 5	Revision: 0100